Concrete Mixer Supply.Com

SECTION 11

Mixer Truck Gearboxes

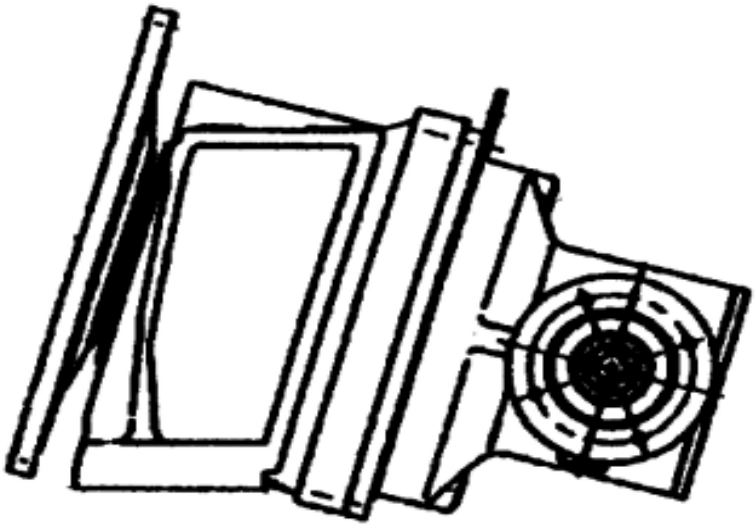

GEARBOXES

ZF Gearboxes (Made in Germany)
PK style are right angle drives
Models include:
PK 7500, PK 6500, PK 5100
PK 4950, PK 4100
Front Water Injection was available in some models.

PART #
GB 1002 PK 7500

GB 1001 REBUILT

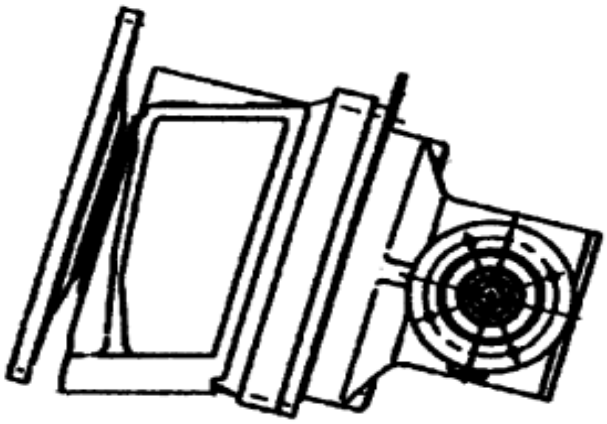

When ordering parts for ZF Gearboxes get
ZF Model # (PK 4100)
ZF Part # 4108-_ _ _-_ _ _
Gearbox Serial #

Item#	*CMS #*	*Description of Part*	*Qty*
1	*B 8350*	*3/4-10 x 3-1/2" Hex Bolt Gr8*	*6*
2	*UW 8000*	*3/4 Hardened Washer*	*6*
3	*B 7250*	*5/8-11 x 2-1/2" Hex Bolt Gr8*	*18*
4	*UW 7000*	*5/8" Hardened Washer*	*18*
5		*Keystock - Stop Block*	*4*
6		*Motor Mounting Block Fine Thread*	*4*
7	*LW 5000*	*1/2" Lockwasher*	*4*
8	*H 1035*	*Motor Gasket*	*1*
9		*Specify Gearbox*	

GEARBOXES

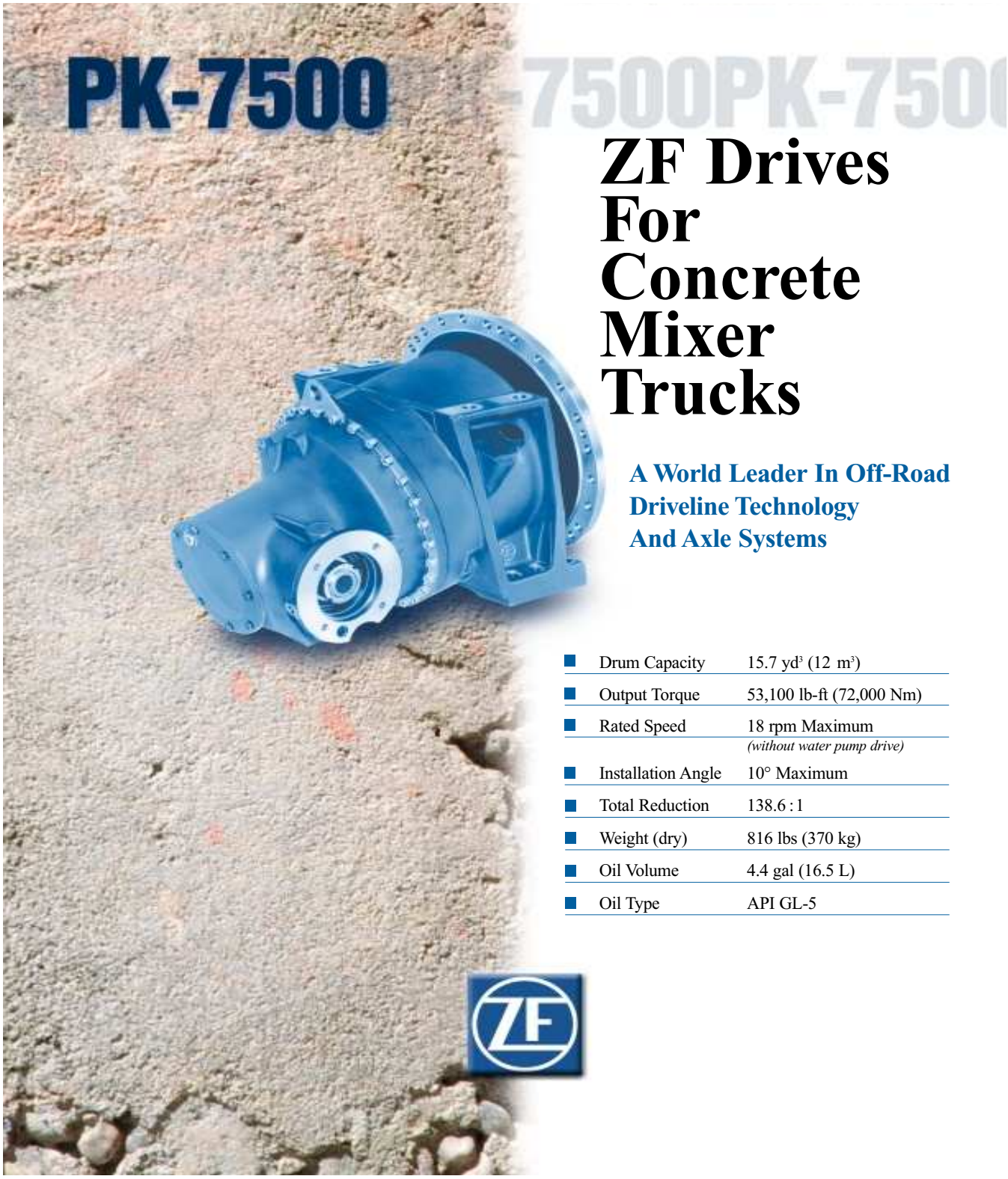
PK-7500
PK-7500
ZF Drives For Concrete Mixer Trucks
A World Leader In Off-Road Driveline Technology And Axle Systems
Drum Capacity 15.7 yd³ (12 m³)
Output Torque 53,100 lb-ft (72,000 Nm)
Rated Speed 18 rpm Maximum
(without water pump drive)
Installation Angle 10° Maximum
Total Reduction 138.6 : 1
Weight (dry) 816 lbs (370 kg)
Oil Volume 4.4 gal (16.5 L)
Oil Type API GL-5
ZF

PK5300-6500-7500 GEARBOXES

Note specify ZF model #

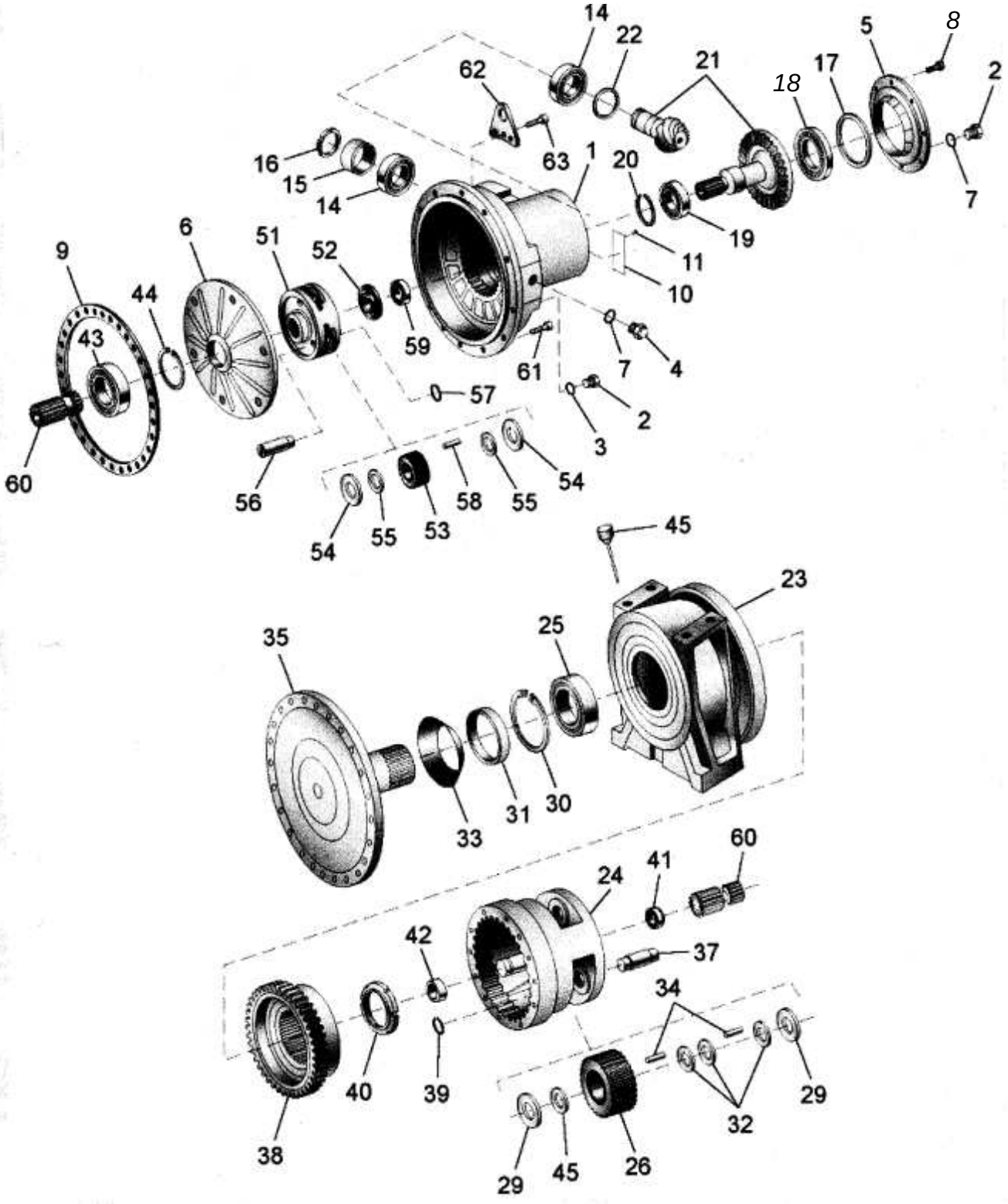

PK5300-6500-7500 GEARBOXES

Note specify ZF model #

Item # Part #	*ZF Part #*	*Description*	*Qty*
GBZF7500	*4108-007-102*	*PK7500 New Gearbox (one year warranty)*	
GBR7500	*PK7500EX*	*PK7500 Rebuilt Gearbox (one year warranty)*	
GBZF7500A		*PK7500 Used-Takeoff-sold as is condition*	
*GBPK7500SK **		*Seal Kit to rebuild gearbox*	
*GBPK7500BK ***		*Bearing Kit to rebuild gearbox*	
Item # Part #	*ZF Part #*	*Description*	*Qty*
1 0215562A	*4108-201-281*	*Housing*	*1*
2 0215558	*4475-280-018*	*Screw Plug*	*3*
3 0215424	*0634-304-287*	*O'Ring*	*3*
4 0215397	*0632--610-066*	*Oil Sight Glass*	*1*
5 0215369	*4108-303-034*	*Cover*	*1*
6 0215401	*4108-301-293*	*Bearing Cover*	*1*
7 0215327	*0634-801-074*	*Sealing Ring*	*2 **
8 0215370	*0636-015-120*	*Hex Head Cap Screw*	*8*
9 0215402	*4108-306-172*	*Gasket*	*1 **
10 0215344	*0730-365-127*	*Serial # Nameplate*	*1*
11 0215345	*0631-311-009*	*Grooved Stud*	*4*
12 1165475	*0730-005-754*	*Shim 2.20mm*	*1*
12 1165475A	*0730-006-871*	*Shim 2.30mm*	*1*
12 1165477	*0730-005-753*	*Shim 2.40mm*	*1*
12 1165478	*0730-006-874*	*Shim 2.50mm*	*1*
12 1165478A	*0730-005-752*	*Shim 2.60mm*	*1*
12 1165478B	*0730-007-237*	*Shim 2.70mm*	*1*
12 1165479	*0730-007-239*	*Shim 2.80mm*	*1*
12 1165479A	*0730-007-697*	*Shim 3.10mm*	*1*
12 1165479B	*0730-005-751*	*Shim 3.00mm*	*1*
12 0215352	*0730-007-237*	*Shim 2.90mm*	*1*
12 0215352A	*0730-005-750*	*Shim 3.20mm*	*1*
14 0215346	*0750-117-057*	*Roller Bearing*	*2 ***
15 0215393	*4108-303-214*	*Bushing*	*1*
16 0215350	*0737-502-128*	*Slotted Nut*	*1*
17 0215363	*0730-000-874*	*Washer 1.0mm*	*1*
17 0215364	*0730-002-241*	*Washer 0.8mm*	*1*
17 0215365	*0730-002-242*	*Washer 0.5mm*	*1*
17 0215366	*0730-002-243*	*Washer 0.4mm*	*1*
17 0215367	*0730-002-244*	*Washer 0.3mm*	*1*
17 0215368	*0730-002-245*	*Washer 0.2mm*	*1*
18 0215362	*0750-116-188*	*Ball Bearing*	*1 ***
19 0215556	*0750-116-235*	*Ball Bearing*	*1 ***

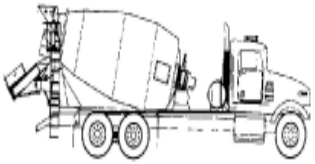

PK5300-6500-7500

Note specify ZF model #

GEARBOXES

Item #	Part #	ZF Part #	Description	Qty
20	0215557	0630-531-057	Retaining Ring	1
21A	0215555	4108-202-050	Sun Gear	1
21B	0215559	4108-302-158	Bevel Pinion	1
22	0215476	4108-303-160	Ring	1
23	0215562	4108-203-154	Bearing Housing	1
24	0215492	4108-303-283	Planetary Carrier	1
25	0215563	0750-117-735	Roller Bearing	1 **
26	0215493	4108-303-298	Planetary Gear	1 **
29	0215317	0730-102-684	Thrust Washer	8
30	0215303	0630-502-067	Retaining Ring	1
31	0215302	----------	(part of Item 33)	1
32	0215319	0730-102-816	Intermediate Washer	16
33	0215319A	0734-112-169	Sealing Collar	1 *
34	0215320	0750-119-092	Needle Bearing	184 **
35	0215564	4108-303-321	Bearing Flange	1
37	0215494	4108-303-289	Pin	4
38	0215568	4108-303-320	Clutch Housing	1
39	0215315	0630-501-031	Retaining Ring	4
40	0215313	0737-502-084	Slotted Nut	1
41	0215390	0750-116-322	Ball Bearing	1 **
42	0215314	0635-285-013	Joint Bearing	1 **
43	0215422	0750-116-137	Ball Bearing	1 **
44	0215423	0630-503-018	Snap Ring	1
45	0215482	4108-203-149	Oil Dip Stick	1
45	0215482B	0501-208-248	Oil Dip Stick Vented	1
51	0215482A	4108-308-038	Planetary Carrier	1
52	0215339	4108-302-007	Bearing Plate	1
53	0215566	4108-308-037	Planetary Gear	4
54	0215334	0730-150-238	Thrust Washer	8
55	0215335	0730-102-311	Thrust Washer	8
56	0215332	4108-302-004	Pin	4
57	0215338	0630-501-025	Retaining Ring	4
58	0215320	0735-470-179	Needle bearing	76 **
59	0215565	0750-116-343	Ball Bearing	1 **
60	0215495	4108-303-296	Sun Gear	1
61	0215571	0636-101-071	Socket Head Cap Screw	27
62	0215561	4108-302-199	Lifting Bracket	1
63	0215560	0636-101-073	Socket Head Cap Screw	3
N/S	1111397	4108-306-171	Gasket	1 *

GEARBOXES

PK7500
ZF Spec 4108-007-102

ZF Passau GmbH
Made in Germany

Type ***Ratio*** ***Serial No.***

Parts List No.

4108-__ __ __-__ __ __

Call in with Type # and Parts List #



GEARBOXES

P3300 P5300 P6300 P7300

Note specify ZF model #

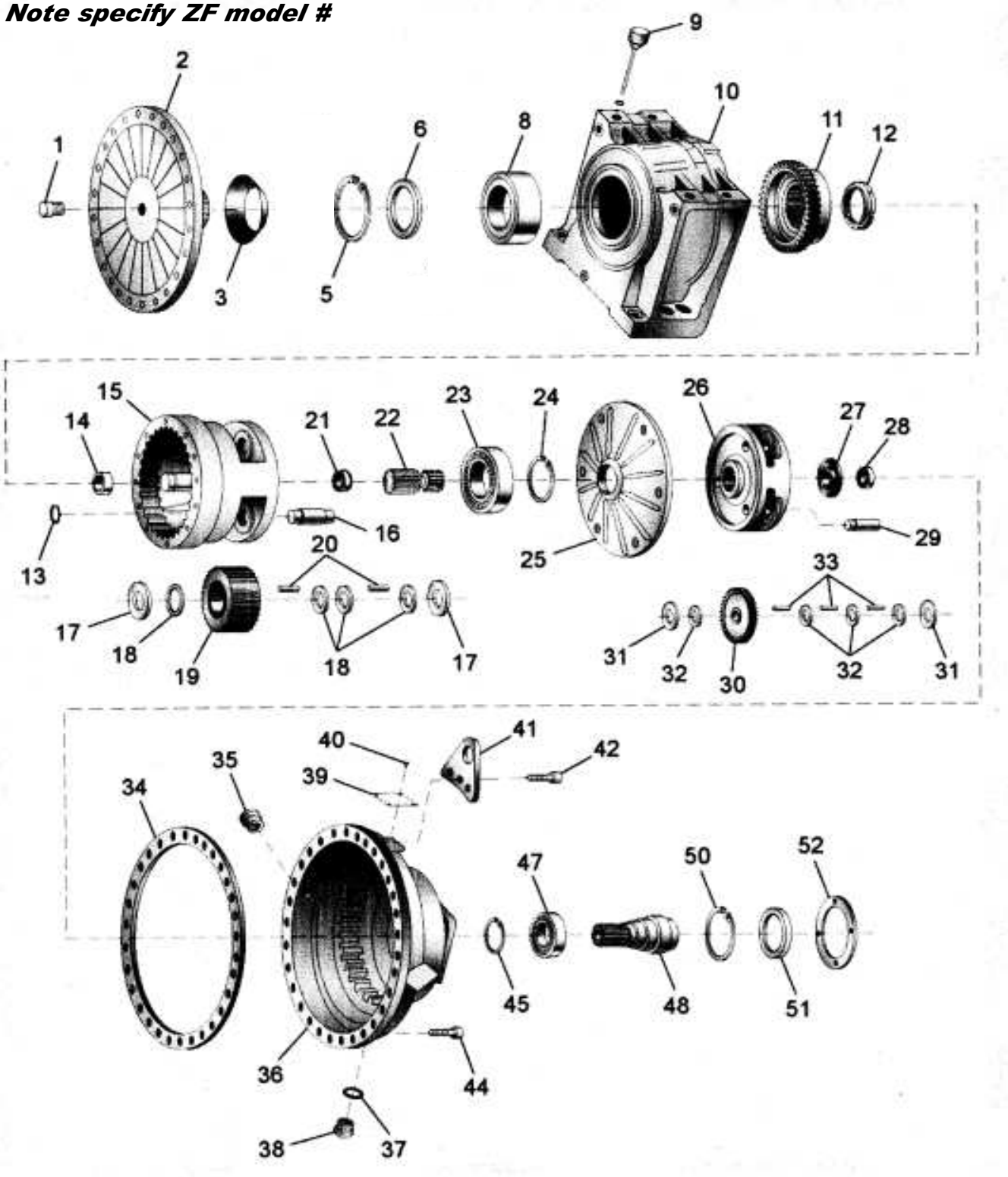

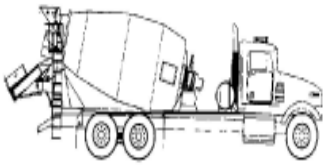

ZF P7300

4108-017-101

GEARBOXES

Item #	Part #	ZF Part #	Description	Qty
	GBZF7300	4108-017-101	Zf Gearbox New	1
	GBR7300	P-7300EX	Zf Gearbox Rebuilt	1
	GBZF7300C		Zf Gearbox Used Takeoff	1
	GBZF7300SK		Zf Gearbox Seal Kit	1 *
	GBZF7300BK		Zf Bearing Kit	1**

Item #	Part #	ZF Part #	Description	Qty
2	0215490	4108-303-292	Bearing Flange	1
3	0215301	0750-112-169	Sealing Collor	1*
5	0215303	0630-502-067	Retaining Ring	1
6	0215304	0630-004-189	Thrust Disk	1
8	0215563	0750-117-735	Roller Bearing	1**
9	0215482	4108-203-149	Dipstick	1
9	0215482B	0501-208-248	Dipstick Vented	1
10	0215562	4108-203-154	Bearing Housing	1
11	0215568	4108-303-320	Clutch Housing	1
12	0215313	0737-502-084	Slotted Nut	1
13	0215315	0630-501-031	Retaining Ring	1
14	0215314	0635-285-013	Joint Bearing	1**
15	0215492	4108-303-283	Planetary Carrier	1
16	0215494	4108-303-289	Pin	4
17	0215317	0730-102-684	Thrust Washer	8
18	0215319	0730-102-816	Intermediate Washer	16
19	0215493	4108-303-298	Planetary Gear	1
20	0215320	0750-119-092	Needle Bearing	184**
21	0215390	0750-116-322	Ball Bearing	1**
22	0215495	4108-303-296	Sun Gear	1
23	0215422	0750-116-137	Ball Bearing	1**
24	0215423	0630-503-018	Snap Ring	1
25	0215401	4108-301-293	Bearing Cover	1
26	0215496	4108-302-192	Planetary Carrier	1
27	0215339	4108-302-007	Bearing Plate	1
28	0215565	0750-116-343	Ball Bearing	1**
29	0215414	4108-302-062	Bearing Pin	3
30	0215499	4108-302-190	Planetary Gear	3
31	0215458	0730-105-878	Thrust Washer	3
32	0215412	0730-102-644	Intermed Washer	12
33	0215411	0735-470-120	Needle Bearing	198**
34	0215402	4108-306-172	Gasket	1*
35	0215397	0632-610-066	Oil Site Glass	1
36	0215562A	4108-201-279	Front Housing	1
37	0001188	0634-801-057	Sealing Ring	1*
38	0215558	4475-280-018	Screw Plug	1
39	0215344	0730-365-127	Name Plate	1
40	0215345	0631-311-009	Grooved Pin	4
41	0215561	4108-302-199	Lifting Bracket	1
42	0215560	0636-101-073	Socket Head Screw	3
44	0215571	0636-101-071	Socket Head Screw	27
45	0215315A	0630-531-064	Retaining Ring	1
47	0215570	0750-116-277	Ball Bearing	1**
48	0215498	4108-301-450	Input shaft 21 Spline	1
50	0215315B	0630-502-039	Retaining Ring	1
51	0215409	0634-300-610	Shaft Seal	1*
52	0215569	4108-302-139	Gasket	1*



ZF Passau GmbH
Made in Germany

Type **Ratio** **Serial No.**

Parts List No.

4108-__ __ __-__ __ __

Call in with Type # and Parts List #

GEARBOXES



ZF Drives For Concrete Mixer Trucks

A World Leader In Off-Road Driveline Technology And Axle Systems

Drum Capacity	15.7 yd³ (12 m³)
Output Torque	53,100 lb-ft (72,000 Nm)
Rated Speed	18 rpm Maximum *(without water pump drive)*
Installation Angle	10° Maximum
Total Reduction	144.3:1
Weight (dry)	772 lbs (350 kg)
Oil Volume	3.1 gal (11.5 L)
Oil Type	API GL-5

ZF Passau GmbH
Made in Germany

Type ***Ratio*** ***Serial No.***

Parts List No.

4108-__ __ __-__ __ __

GEARBOXES

GB 4000 TRANSMITAL GEARBOX PEDESTAL CONVERSION

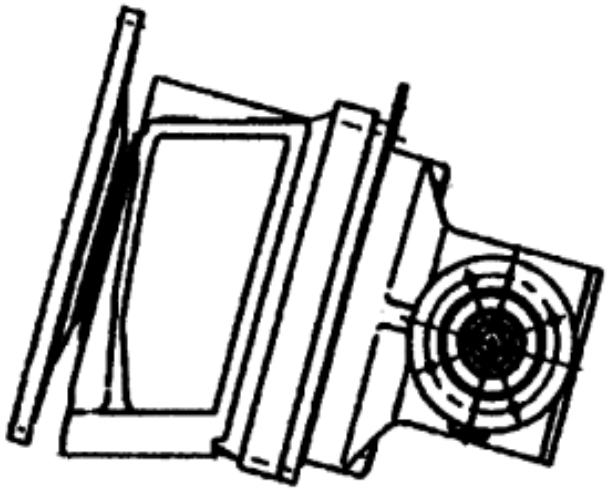

Concrete Mixer Supply sells a pedestal modification kit to convert Jaeger Mixers from the Transmital Gearbox to the ZF PK 7500.

Kit Part # GB 4000 comes with gearbox and parts plus instructions for installing the pieces.

Top View of the Front Pedestal with Gearbox Base Blocks and supporting steel reinforcements to be welded into place on top of the Transmital Pedestal.

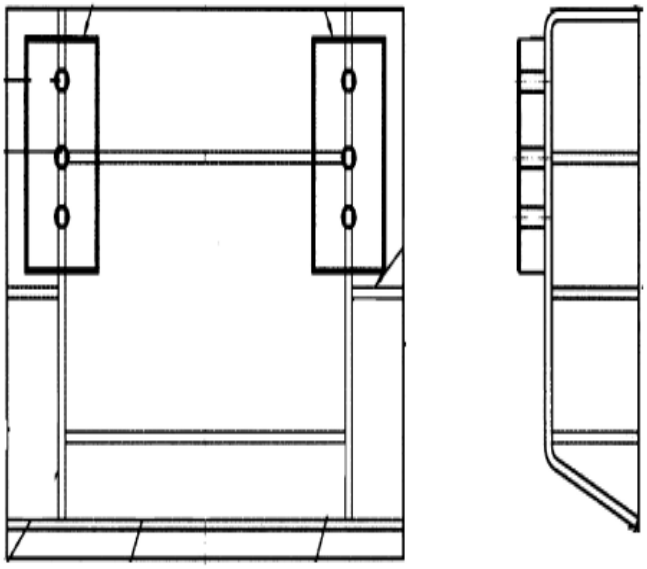

GEARBOXES

ZF Model PK-5100

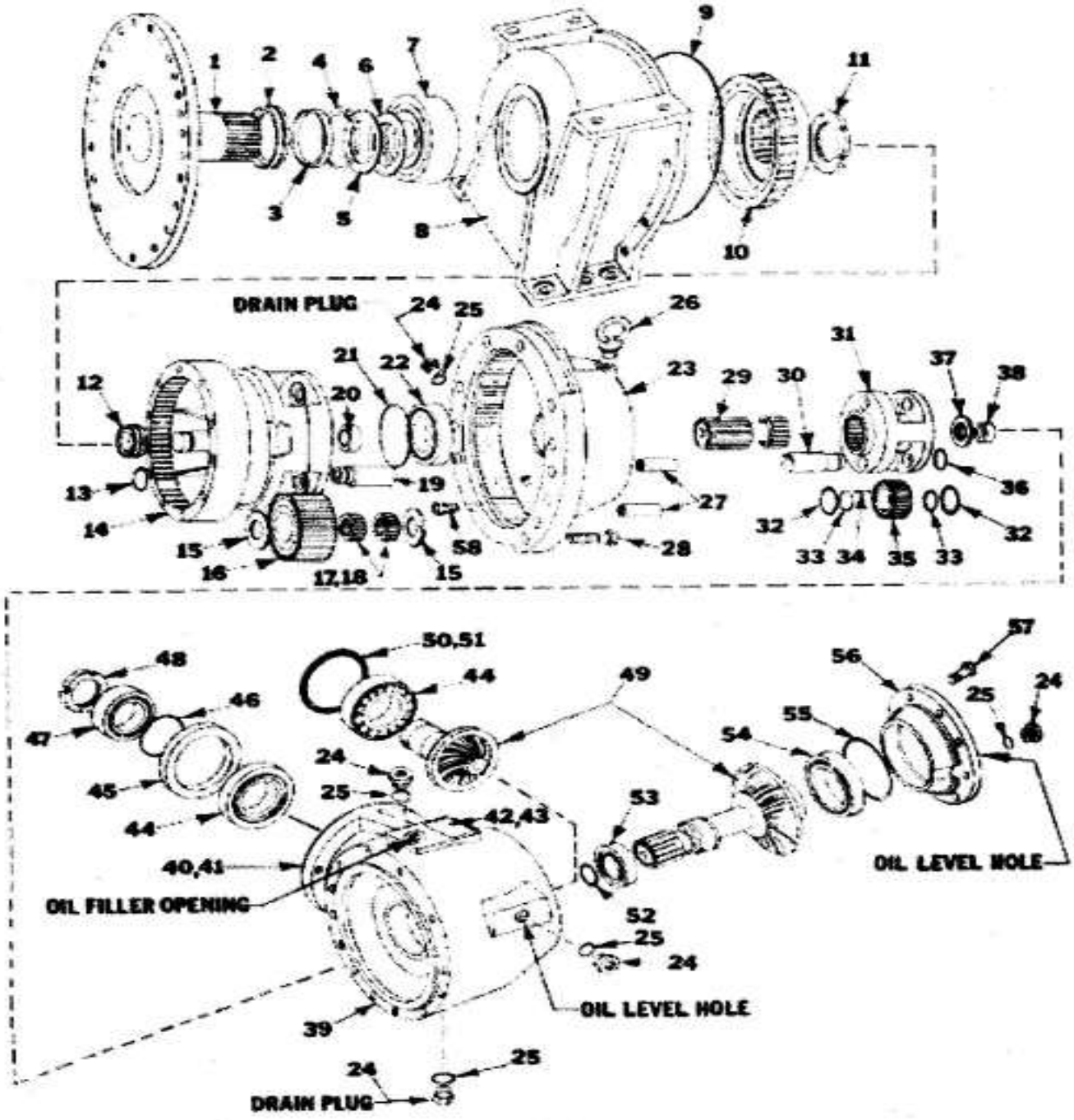

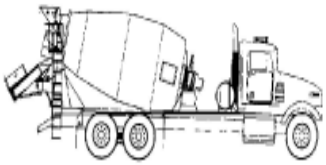

GEARBOXES

ZF PK5100

Item	Part #	Description	Qty
	GBR5100	Gearbox Rebuilt	
*	PK-5100SK	Seal Kit	1
**	PK-5100BK	Bearing Kit	1
1	4108-303-192	Bearing Flange	1
2	0734-307-142	Shaft Seal *	1
3	4108-306-102	Ring	1
4	0630-502-067	Circlip	1
5	0630-004-189	Thrust Disk	1
6	0730-100-233	Shim, 0.2mm	1
6	0730-100-584	Shim, 0.3mm	1
6	0730-003-018	Shim, 0.5mm	1
6	0730-003-019	Shim, 0.7mm	1
7	0750-117-012	Roller Bearing **	1
8	4108-306-155	Bearing Housing	1
9	0634-304-411	Oring *	1
10	4108-306-101	Clutch Housing	1
11	0737-502-084	Slotted Nut	1
12	0635-285-013	Joint Bearing **	1
13	0630-501-031	Circlip	3
14	4108-206-047	Planetary Carrier	1
15	0730-102-684	Thrust Washer	6
16	4108-306-146	Planetary Pinion	3
17	0730-102-816	Spacing Washer	12
18	0735-470-038	Needle Bearing **	138
19	4108-306-091	Pin	3
20	0635-331-269	Ball Bearing **	1
21	0630-503-026	Snap Ring	1
22	0635-331-248	Ball Bearing **	1
23	4108-208-003	Intermediate Housing	1
24	0636-302-045	Screw Plug	5
25	0634-801-074	Seal Ring *	5
26	0636-804-003	Eye Bolt	1
27	0631-328-586	Clamping Pin	4
28	0636-011-162	Hex Head Bolt	4
29	4108-306-147	Sun Gear	1
30	4108-302-004	Pin	3
31	4108-302-005	Planetary Carrier	3
32	0730-150-238	Thrust Washer	6
33	0730-102-311	Thrust Washer	6
34	0735-470-179	Needle Bearing **	57
35	4108-308-023	Planetary Pinion	3
36	0630-501-025	Circlip	3
37	4108-302-007	Bearing Plate	1
38	0635-332-196	Ball Bearing **	1
39	4108-303-191	Housing	1
40	0630-361-038	End Cap	1
41	0630-361-037	End Cap	3
42	0730-365-058	Name Plate	1
43	0631-311-009	Grooved Pin	4
44	0635-900-363	Tapered Bearing Set **	2
45	0734-310-087	Shaft Seal *	1
46	0634-306-162	Oring *	1
47	4108-301-114	Seal Sleave	1
48	0737-502-128	Slotted Nut	1
49	4108-202-011	Beveled Gear Set	1
50	0730-002-171	Shim, 3.00mm	1
50	0730-002-172	Shim, 2.75mm	1
50	0730-002-173	Shim, 2.50mm	1
50	0730-002-174	Shim, 2.25mm	1
51	4002-302-021	Shim, 0.50mm	1
51	4002-302-022	Shim, 0.30mm	1
51	4002-302-023	Shim, 0.20mm	1
51	4002-302-032	Shim, 0.1mm	1
52	0630-501-038	Circlip	1
53	0635-900-610	Ball Bearing **	1
54	0635-332-060	Ball Bearing **	1
55	0730-000-874	Shim, 1.0	1
55	0730-002-241	Shim, 0.8mm	1
55	0730-002-242	Shim, 0.5mm	1
55	0730-002-243	Shim, 0.4mm	1
55	0730-002-244	Shim, 0.3mm	1
55	0730-002-245	Shim, 0.2mm	1
56	4108-303-034	Cover	1
57	0636-015-120	Hex Head Screw	8
58	0636-101-070	Socket Head Screw	12

ZF Passau GmbH
Made in

Type **Ratio** **Serial No.**

Parts List No.

4108-__ __ __-__ __ __



GEARBOXES

ZF PK5100







GEARBOXES

Notice: Important Bolt Installation Instructions. When installing a replacement gearbox follow these instructions for remounting your gearbox

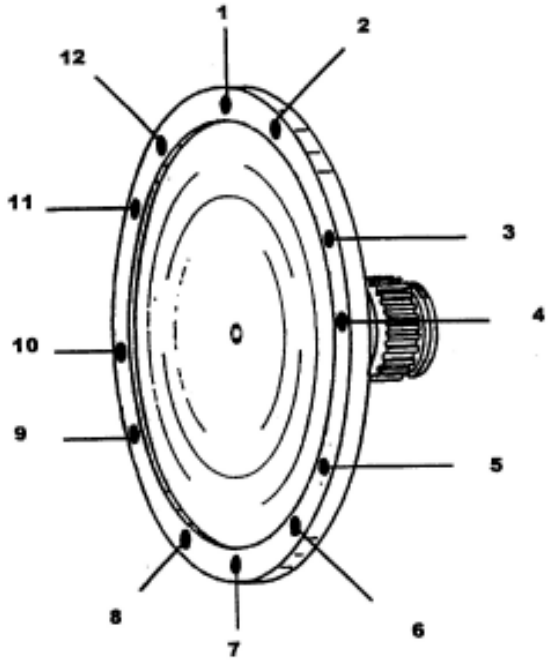

Pair # 1 - Bolts 1 and 7

Pair # 2 - Bolts 4 and 10

Pair # 3 - Bolts 2 and 8

Pair # 4 - Bolts 5 and 11

Pair # 5 - Bolts 3 and 9

Pair # 6 - Bolts 6 and 12

1. Using a pencil or marker, number the 12, 18 or 24 bolt holes on the mounting flange consecutively.

2. Remove only 2 bolts at a time! Remove these bolts using the sequence indicated above.

3. Clean the bolt hole of all rust and contamination.

4. Coat the new bolt and the bolt hole with an anti-seize compound.

5. Put a hardened washer on the bolt and thread the bolt into the bolt hole. Torque the bolt to 160 Foot Pounds.

6. Repeat steps 1 - 5 with each pair of bolts in the illustration until all 12 bolts have been replaced. Then if there are additional holes follow the same pattern.

GEARBOXES

GB1018 - Challenge 08/Skk 12 Bolt Gearbox View

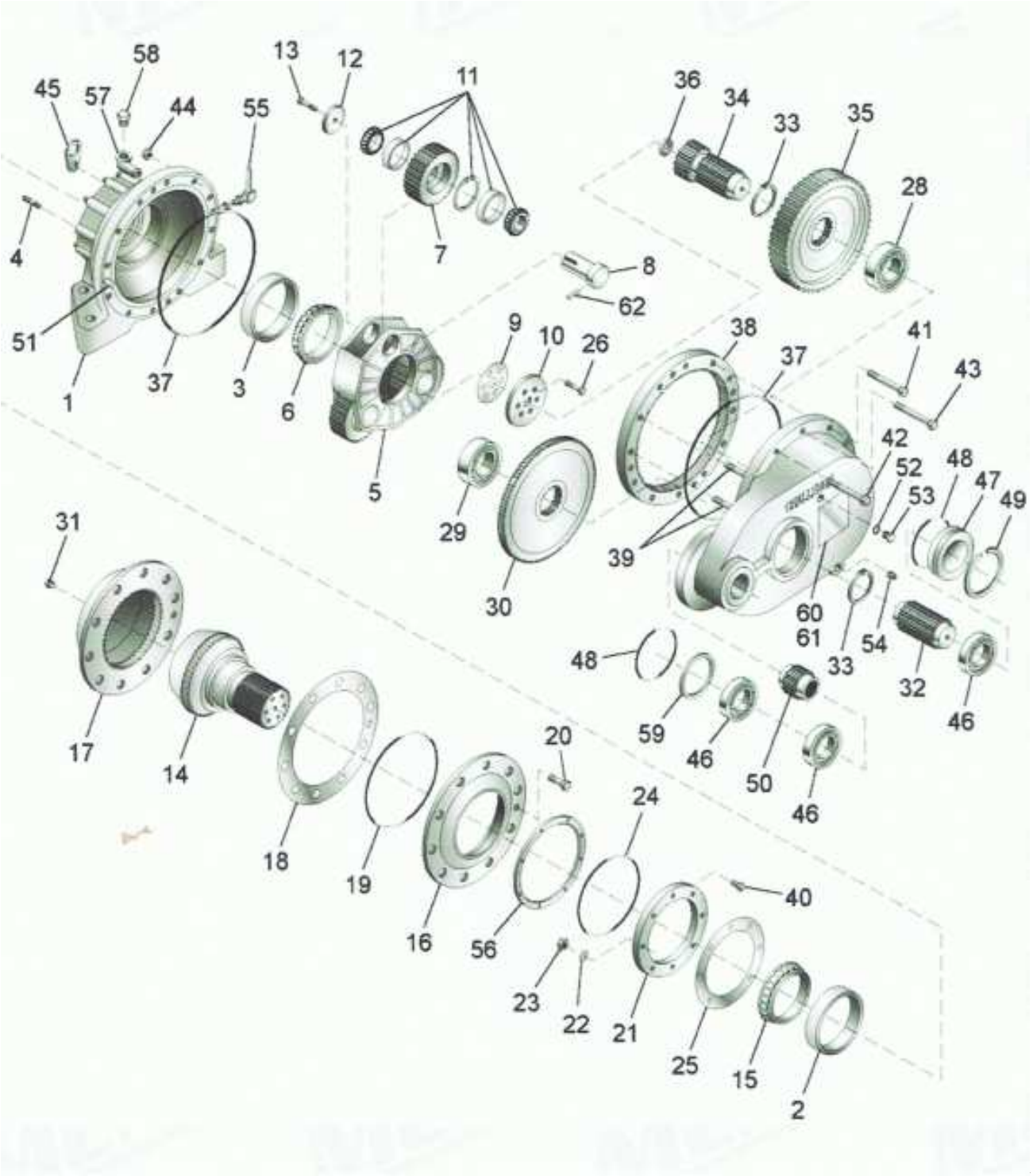

GEARBOXES

GB1018 - Challenge 08/Skk 12 Bolt Gearbox View

GB1018 - 1640320EX Rebuilt Gearbox

#	Part #	Desciption-Kit	Qty
*	1640320AK	Seal & Shim Kit	1
**	1640320BK	Bearing Kit	1
1	5062244	Housing Output	1
2	1300497	Cup Bearing**	1
3	1300496	Cup Bearing**	1
4	5062153	Stud	8
5	5062256	Cage-Planetary	1
6	1300494	Cone-Bearing**	1
7	1670548	Gear-Planetary	3
8	5062261	Shaft-Planetary Gear	3
9	4060592	Shim Kit *	1
10	5062245	Plate-Output Shaft	1
11	1300490	Bearing Assembly**	3
12	5062246	Plate-Planet Gear Shaft	3
13	1032523	Cap Screw	3
14	1670553	Output Shaft	1
15	1300495	Cone Bearing**	1
16	1670555	Socket Front Trunnion	1
17	1670556	Socket, Rear Trunnion	1
18	4060034	Shim Kit *	1
19	1690740	O Ring *	1
20	1032059	Cap Screw	2
21	5062247	Ring Retainer	1
22	1050362	Lockwasher	8
23	1030249	Jam Nut	8
24	5062903 - Oring (Specify 3/8" or 7/16" Dia)*1		
25	4060593	Shim Kit *	1
26	1032057	Cap Screw	6
27	5061871	Housing - Input	1
28	1300492	Bearing **	1
29	1300491	Bearing **	1
30	1670540	Driven Gear-First Stage	1
31	1573710	Plug	1
32	1670551	Shaft-Second Stage	1
33	1050177	Snap Ring	2
34	1670538	Sun Gear	1
35	1670539	Driven Gear-2nd Stage	1
36	1300489	Bearing **	1
37	5062150	O Ring *	2
38	1670547	Ring Gear	1
39	1032281	Cap Screw	9
40	1032422	Cap Screw	8
41	1032054	Bolt	6
42	1031852	Bolt	1
43	1032056	Bolt	2
44	1031896	Hex Nut	12
45	5062248	Bracket, Lifting	1
46	1300493	Bearing **	3
47	5062249	Retainer-Bearing	1
48	1690231	O Ring *	2
49	1050982	Retaining Ring	1
50	1670549	Shaft-Input	1
51	1051036	Groove Pin	4
52	H-70-568-114	O Ring	1
53	1573971	Plug	1
54	1574915	Drain Plug	1
55	1170261	Sight Gauge	1
56	5062251	Retainer	1
57	1570526	Elbow	1
58	1690909	Breather	1
59	5062250	Washer-Spacer	1
60	5070696	Name Plate	1
61	1030680	Drive Screw	4
62	1051129	Roll Pin	3



GEARBOXES

GB1018A - Challenge 08/Skk 24 Bolt Gearbox View

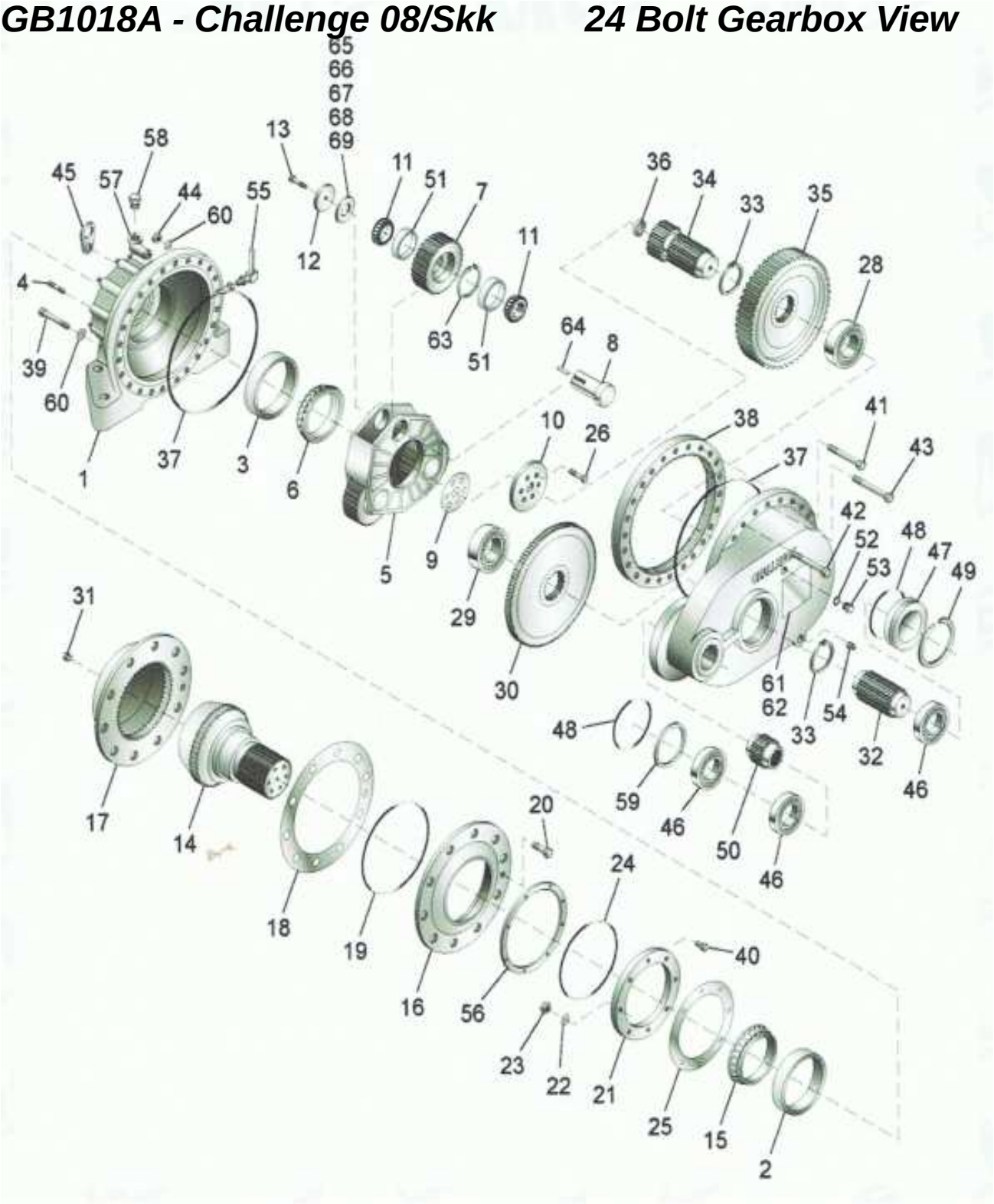

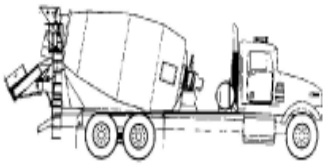

GEARBOXES

GB1018A - Challenge 08/Skk

24 Bolt Gearbox View

GB1018A - 5063026EX Rebuilt Gearbox

#	Part #	Desciption-Kit	Qty
*	1640320AK	Seal & Shim Kit	1
**	5063026BK	Bearing Kit	1
1	50623003	Housing Output	1
2	1300497	Cup Bearing**	1
3	1300496	Cup Bearing**	1
4	5062153	Stud	8
5	5063004	Cage-Planetary	1
6	1300494	Cone-Bearing**	1
7	1670653	Gear-Planetary	3
8	5063007	Shaft-Planetary Gear	3
9	4060592	Shim Kit *	1
10	5062245	Plate-Output Shaft	1
11	1300578	Bearing **	6
12	5063006	Plate-Planet Gear Shaft	3
13	1032522	Cap Screw	3
14	1670553	Output Shaft	1
15	1300495	Cone Bearing**	1
16	1670555	Socket Front Trunnion	1
17	1670556	Socket, Rear Trunnion	1
18	4060034	Shim Kit *	1
19	1690740	O Ring *	1
20	1032059	Cap Screw	2
21	5062247	Ring Retainer	1
22	1050362	Lockwasher	8
23	1030249	Jam Nut	8
24	5062903 - Oring (Specify 3/8" or 7/16" Dia)*		1
25	4060593	Shim Kit *	1
26	1032057	Cap Screw	6
27	5063022	Housing - Input	1
28	1300492	Bearing **	1
29	1300491	Bearing **	1
30	1670540	Driven Gear-First Stage	1
31	1573710	Plug	1
32	1670551	Shaft-Second Stage	1
33	1050177	Snap Ring	2
34	1670538	Sun Gear	1
35	1670539	Driven Gear-2nd Stage	1
36	1300489	Bearing **	1
37	5062150	O Ring *	2
38	1670654	Ring Gear	1
39	1032505	Cap Screw	9
40	1032422	Cap Screw	8
41	1032508	Bolt	12
42	1032507	Bolt	1
43	1032509	Bolt	2
44	1031823	Hex Nut	8
45	5062248	Bracket, Lifting	1
46	1300493	Bearing **	3
47	5062249	Retainer-Bearing	1
48	1690231	O Ring *	2
49	1050982	Retaining Ring	1
50	1670549	Shaft-Input	1
51	1300579	Cup Bearing **	6
52	H-70-568-114	O Ring	1
53	1573971	Plug	1
54	1574915	Drain Plug	1
55	1170261	Sight Gauge	1
56	5062251	Retainer	1
57	1570526	Elbow	1
58	1690909	Breather	1
59	5062250	Washer-Spacer	1
60	1050448	Washer	1
61	5070696	Name Plate	1
62	1030680	Drive Screw	4
63	1051128	Retaining Ring	6
64	1051186	Dowell Pin	3
65	1691021	Shim-Planet Gear .002"	2
66	1691022	Shim-Planet Gear .003"	2
67	1691023	Shim-Planet Gear .005"	2
68	1691024	Shim-Planet Gear .010"	2
69	1691025	Shim-Planet Gear .020"	2

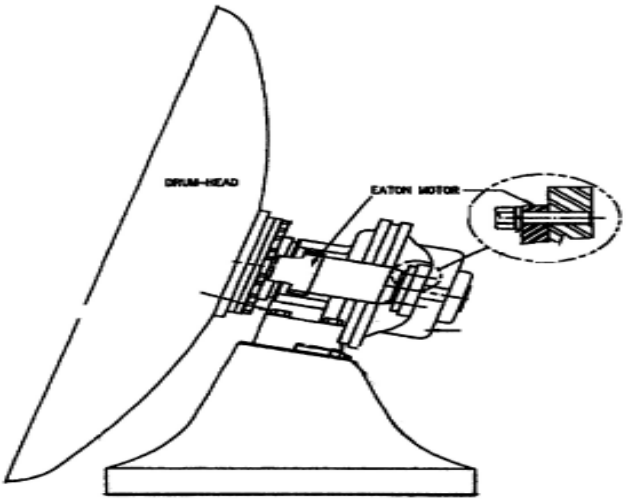

GEARBOXES

ZT GEARBOX
CONTINENTAL Manufacturing is using this Gearbox for its new mixer installations.

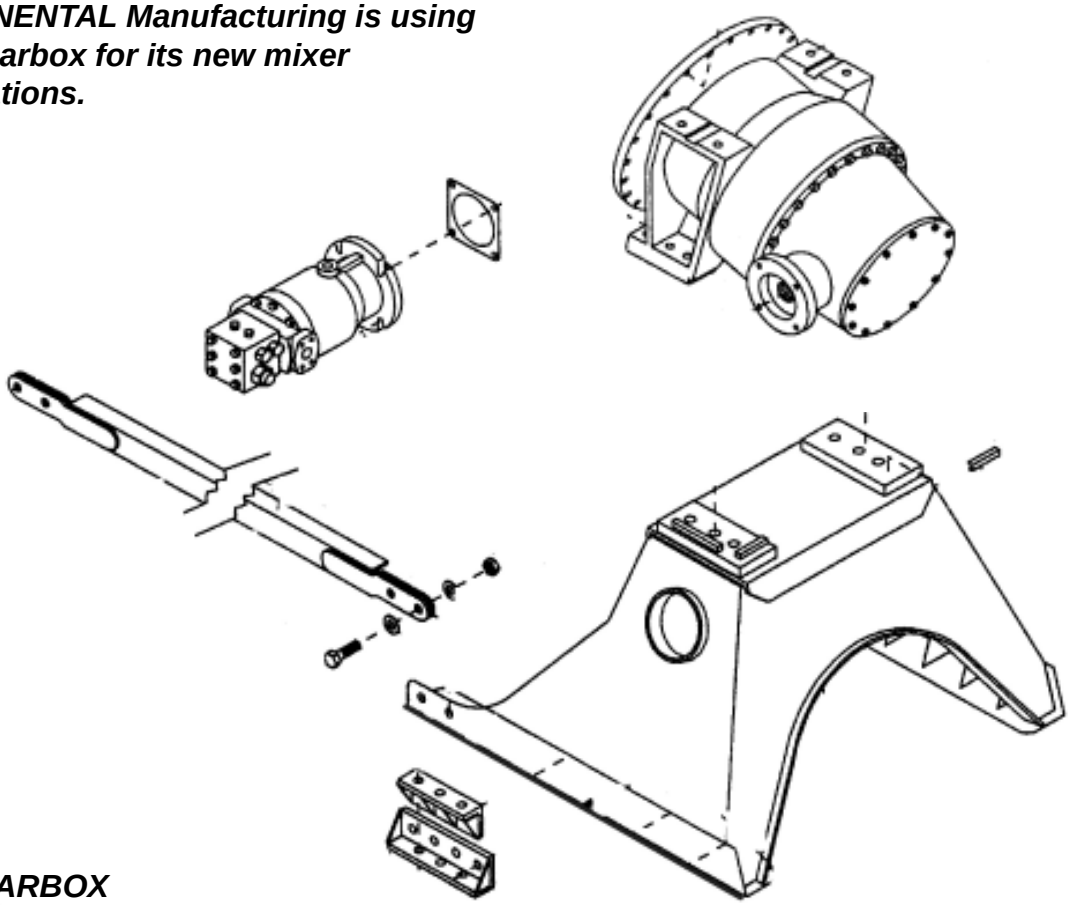

Eip GEARBOX
Model PM70 or PM R 70 (Right Angle Drive)
Kimble Mixer is using this Gearbox for its new mixer installations.



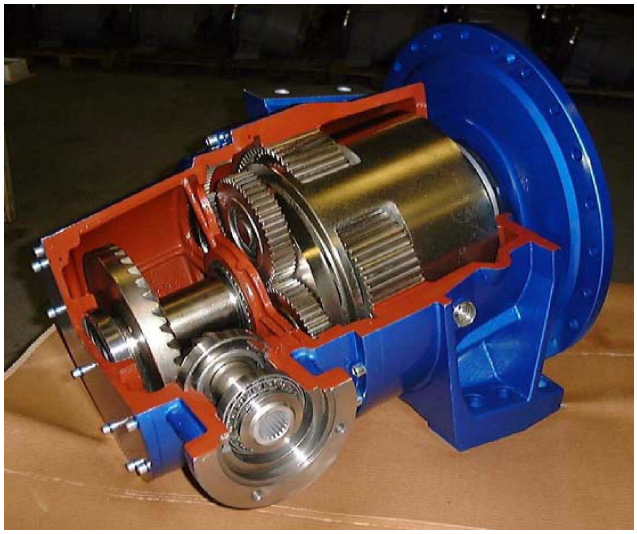

GEARBOXES

EiP PM-70 GEARBOX

EUROPEAN GEARBOX FOR MIXER TRUCK

KIMBLE MIXER CO



GEARBOXES

Part # GB 3000 with Front Water Injection; GB 3001 Standard 770 Gearbox New; GB 3000 R Rebuilt Front Water Rex 770 and GB 3001 R Standard 770 Rebuilt

REX 770 Gearbox - used for many years by Rex in the production of their mixers. New and Rebuilt Gear-boxes are available, as well as all the repair parts.

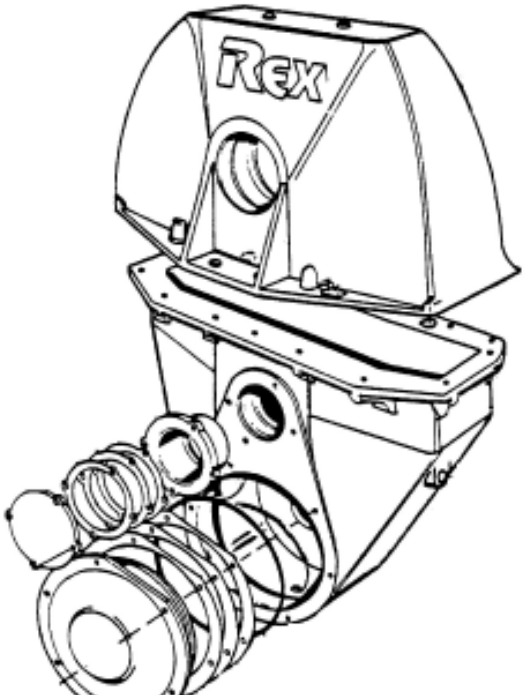

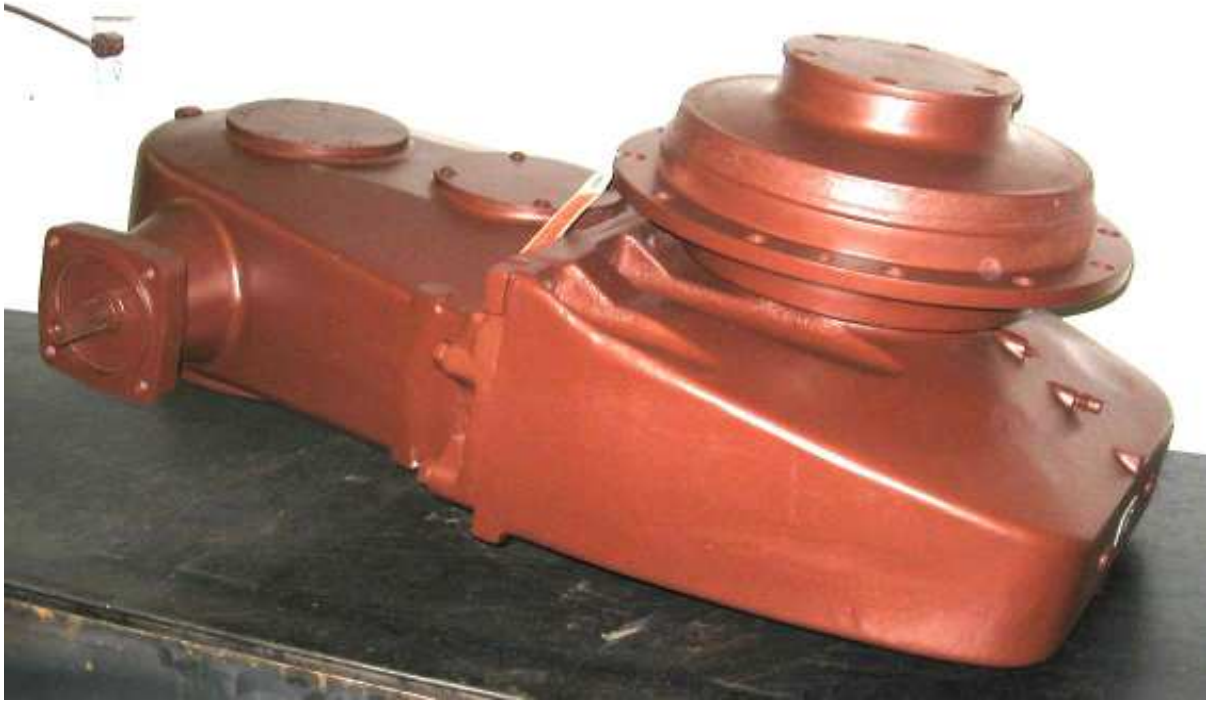

GEARBOXES

Rex Model 770

Gear Cases, Cover, Gasket, and Mounting

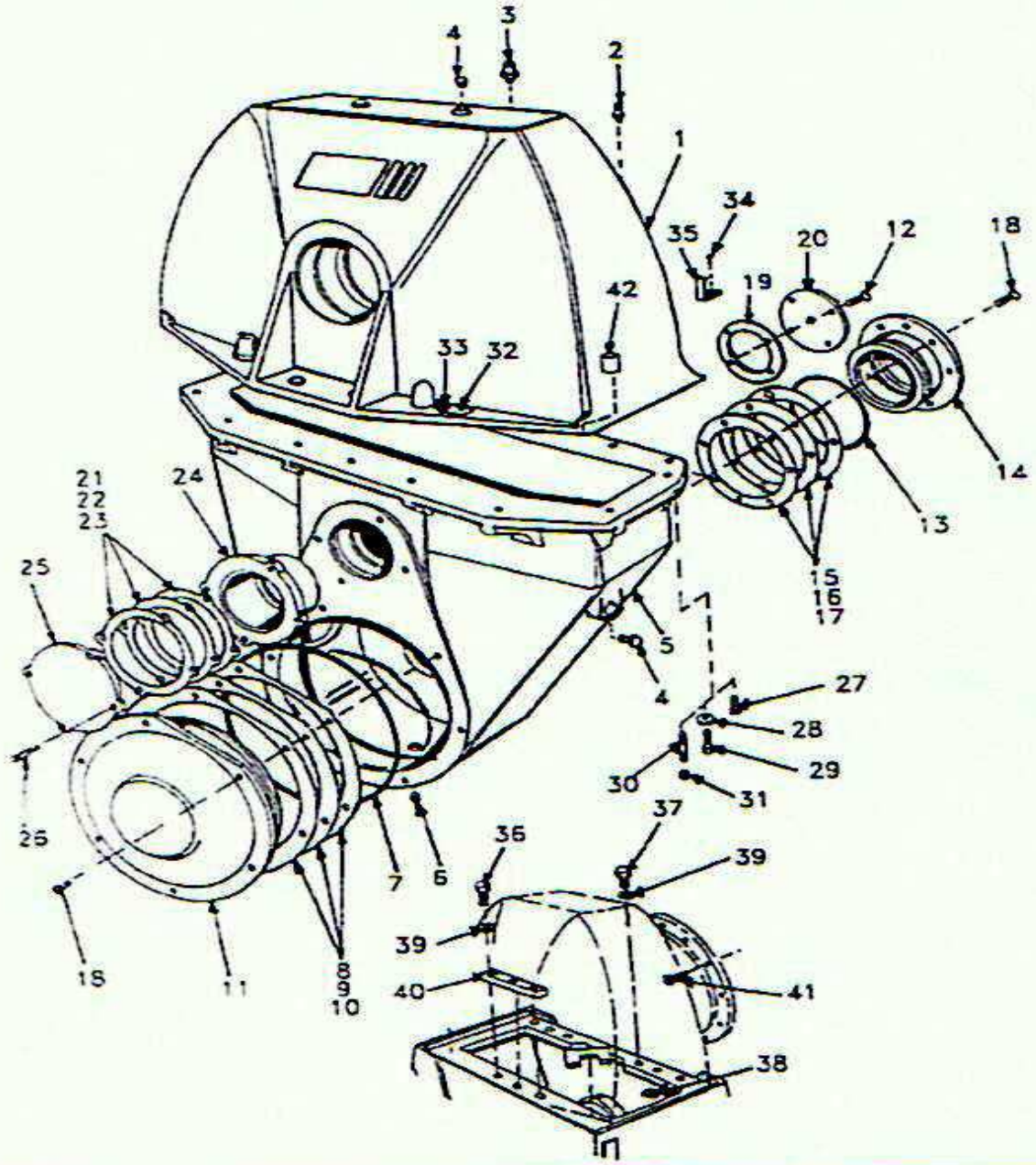

Item	Part Number	Description	Kit	Quantity
	602-10332-02EX	Gearbox-Rebuilt		
*	602-10332-02GK	Seal and Gasket Kit		1
**	602-10332-02BK	Bearing Kit		1
***	602-10332-02SK	Shim Kit		1

(Continued)

GEARBOXES

Rex Model 770

Gear Cases, Cover, Gasket, and Mounting

Item	Part Number	Description	Kit	Quantity
1	402-02627-02	Gear Case-Upper Half		1
2	398-08000-07	Grease Fitting		1
3	298-13005-86	Breather Plug		1
4	398-14010-42	Plug		3
5	402-02628-03	Gear Case-Lower Half		1
6	298-13002-86	Plug		2
7	298-03545-68	"O" Ring	*	1
8	102-31041-05	Shim, 0.005"	***	3
9	102-31041-07	Shim, 0.007"	***	3
10	102-31041-20	Shim, 0.020"	***	1
11	402-01806-02	Bearing Carrier		1
12	298-00151-93	Socket Head Cap Screw		4
13	X7647	"O" Ring	*	1
14	402-01739-02	Bearing Carrier		1
15	102-30077-05	Shim, 0.005"	***	3
16	102-30077-07	Shim, 0.007"	***	3
17	102-30077-20	Shim, 0.020"	***	1
18	298-00068-93	Flat Head Cap Screw		14
19	102-09300-01	Gasket	*	1
20	102-09299-01	Cover		1
21	102-30226-05	Shim, 0.005"	***	3
22	102-30226-07	Shim, 0.007"	***	3
23	102-30226-20	Shim, 0.020"	***	1
24	402-00693-02	Bearing Carrier		1
25	402-00692-02	End Cover		1
26	298-00108-93	Hex Head Cap Screw		4
27	298-00072-93	Flat Head Cap Screw		2
28	102-10955-01	Washer		8
29	298-00138-93	Hex Head Cap Screw		6
30	102-10954-01	Stud		2
31	298-02014-71	Lock Nut		2
32	102-09464-01	Plate		1
33	398-10000-89	Drive Screw		2
34	398-10000-94	Drive Screw		1
35	102-10301-01	Oil Deflector		1
36	298-00133-93	Hex Head Cap Screw		3
37	298-00091-93	Hex Head Cap Screw		4
38	298-02067-71	Flanged Cap Screw		3
39	298-00042-97	Washer		10
40	102-09673-01	Block		1
41	298-00131-93	Hex Head Cap Screw		12
42	102-09078-01	Dowel Pin		3

GEARBOXES

Rex Model 770

Internal Gears, Shafts, Bearings and Seals

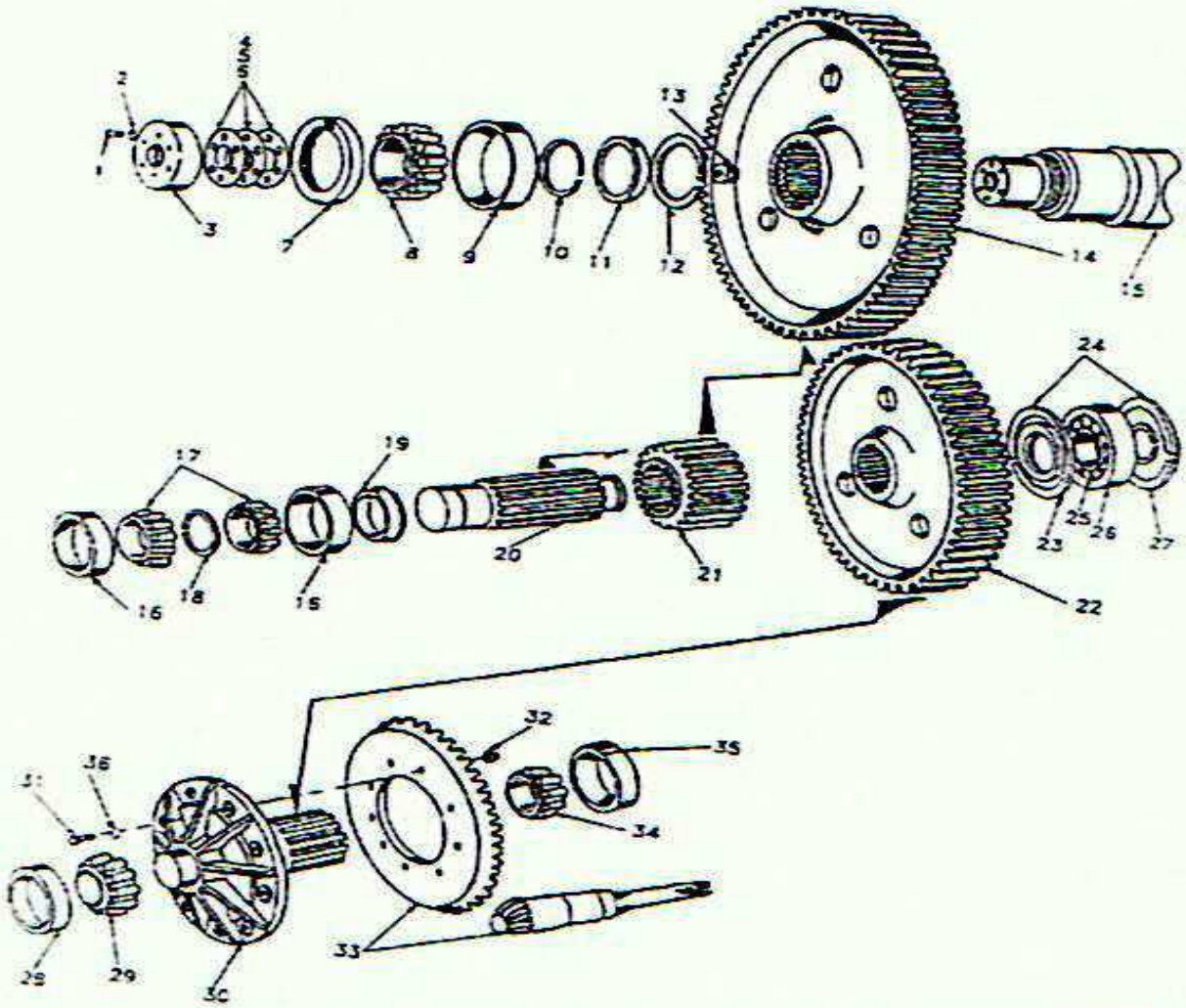

Item	Part Number	Description	Kit	Quantity
1	298-00094-93	Socket Head Cap Screw		6
2	398-20000-39	Lock Washer		6
3	102-30298-01	Retainer-Oil Seal		1
4	102-09461-05	Shim, 0.005"	***	3
5	102-09461-07	Shim, 0.007"	***	3
6	102-09461-20	Shim, 0.020"	***	1
7	X7795	Oil Seal		1
8	298-00302-02	Cone Bearing	**	1
9	298-00301-02	Cup Bearing	**	1
10	298-08522-34	Retaining Ring		1

(Continued)

GEARBOXES

Rex Model 770

Internal Gears, Shafts, Bearings and Seals

Item	Part Number	Description	Kit	Quantity
11	102-08990-01	Spacer		1
12	298-07525-34	Retaining Ring		1
13	398-14005-80	Plug		1
14	402-02619-03	Gear-51T		1
15	102-04909-01	Shaft		1
16	298-00325-02	Cup Bearing	**	2
17	298-00326-02	Cone Bearing	**	2
18	298-08525-34	Retaining Ring		1
19	102-09301-01	Spacer		1
20	102-30227-01	Intermediate Shaft		1
21	402-01733-02	Pinion-15T		1
22	402-02620-04	Gear-83T		1
23	102-09302-01	Spacer		1
24	298-07526-34	Retaining Ring		2
25	298-00373-02	Inner Race	**	1
26	298-00374-02	Outer Race	**	1
27	298-08524-34	Retaining Ring		1
28	298-00305-02	Cup Bearing	**	1
29	298-00306-02	Cone Bearing	**	1
30	502-04753-80	Bevel Gear Carrier		1
31	298-00208-93	Hex Head Cap Screw		10
32	298-02058-71	Lock Nut		10
33	502-04709-80	Spiral Bevel Gear		1
34	298-00066-02	Cone Bearing	**	1
35	298-00067-02	Cup Bearing	**	1
36	298-00039-97	Washer		10

GEARBOXES

Rex Model 770

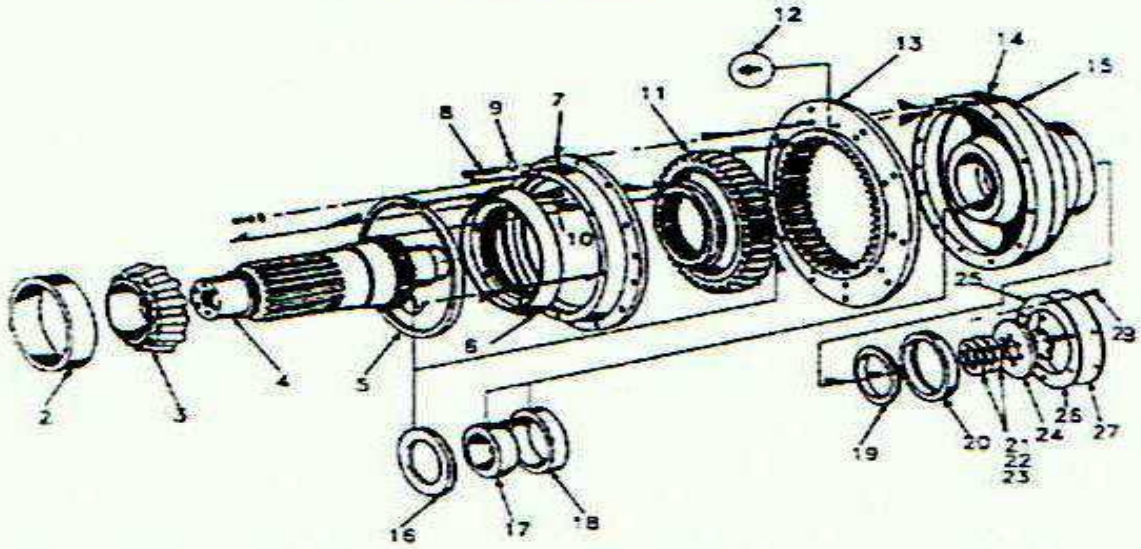

Item	Part Number	Description	Kit	Quantity
1	298-03104-68	Oil Seal	*	1
2	298-00299-02	Cup Bearing	**	1
3	298-00300-02	Cone Bearing	**	1
4	102-04909-01	Shaft		1
5	298-03105-68	Oil Seal	*	1
6	402-01741-02	Ball-Oil Seal		1
7	402-02645-02	Housing-Oil Seal		1
8	298-00107-93	Hex Head Cap Screw		12
9	398-20000-37	Lock Washer		12
10	398-02006-08	Hex Head Cap Screw		6
11	402-01743-02	Coupling Hub		1
12	398-99006-80	Grease Fitting		1
13	402-01742-04	Flange-Coupling		1
14	402-02622-02	Hub-Drum Head		1
15	398-17000-05	Socket Head Set Screw		1
16	102-08984-01	Spacer		1
17	298-00298-02	Inner Ring	**	1
18	298-00297-02	Outer Ring	**	1
19	402-00012-02	Spacer		1
20	102-08987-01	Tapered Spacer		1
21	102-10629-05	Shim, 0.005"	***	3
22	102-10629-07	Shim, 0.007"	***	3
23	102-10629-20	Shim, 0.020"	***	1
24	102-10631-01	Lock Plate		1
25	298-00160-93	Socket Head Cap Screw		6
26	102-08995-01	Gasket	*	1
27	102-08992-01	Cover		1
28	298-00073-93	Flat Head Cap Screw		6

GEARBOXES

Rex Model 770

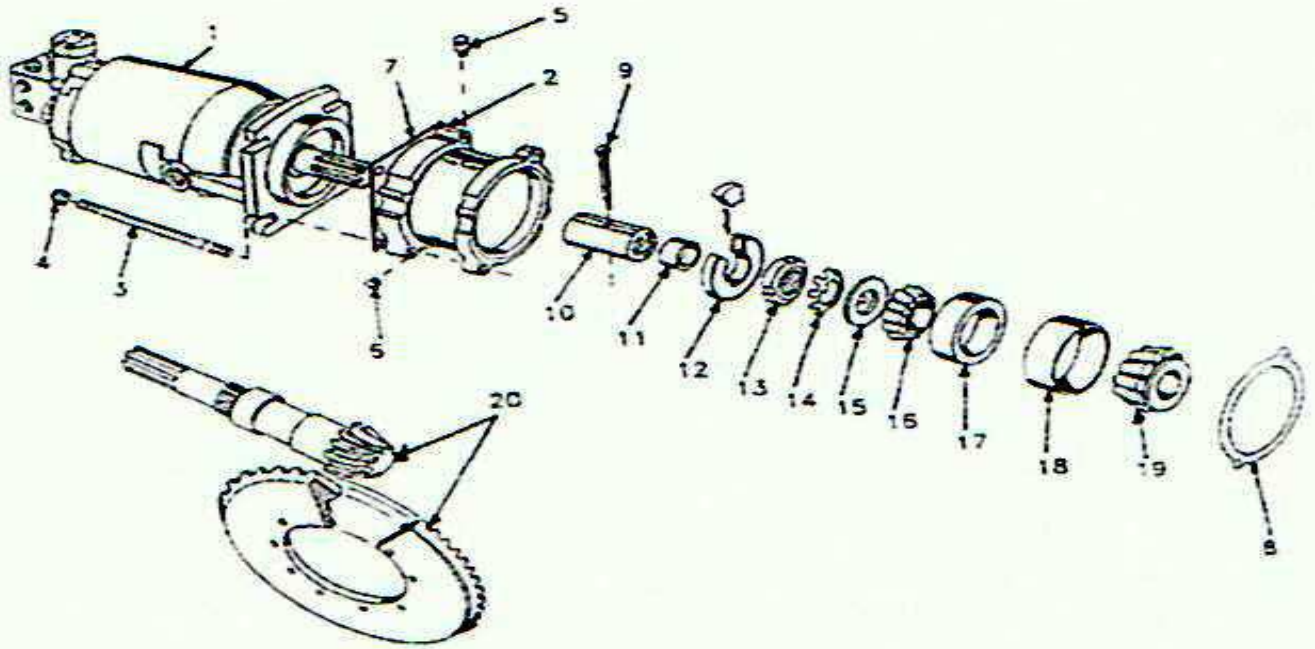

Item	Part Number	Description	Kit	Quantity
1	Reference Only	Hydraulic Motor		1
2	402-01667-02	Flange		1
3	102-10957-01	Stud		4
4	298-02063-71	Flanged Lock Nut		4
5	298-13006-86	Air Vent		1
6	398-14010-31	Plug		2
7	102-01781-01	Gasket	*	1
8	102-08988-01	Gasket	*	1
9	398-03000-19	Cotter Pin		1
10	102-08299-01	Coupling-23 Spline		1
10	102-08529-01	Coupling-23 to 20 Spline		1
10	102-10072-01	Coupling-20 Spline		1
11	298-05013-08	Wear Sleeve	*	1
12	298-03103-68	Oil Seal	*	1
13	X6202	Lock Nut		1
14	298-06003-97	Lock Washer		1
15	298-00028-97	Keyed Washer		1
16	298-00310-02	Cone Bearing	**	1
17	298-00309-02	Cup Bearing	**	1
18	298-00307-02	Cup Bearing	**	1
19	298-00308-02	Cone Bearing	**	1
20	502-04709-80	Spiral Bevel Gear		1

GEARBOXES

Rex Model 770

Front Water Entry Option

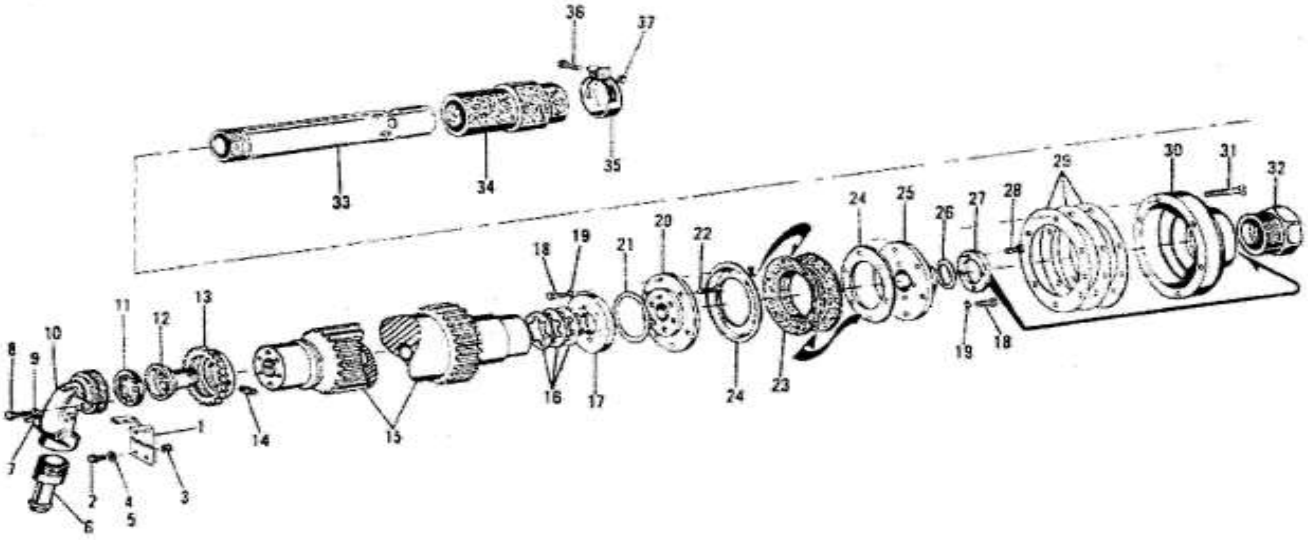

Item	Part Number	Description	Kit	Quantity
1	102-10100-01	Lock-Water Inlet Elbow		1
2	398-02001-79	Hex Head Cap Screw		2
3	398-11000-19	Hex Nut		2
4	398-20000-37	Lock Washer		2
5	398-20000-23	Washer		2
6	298-04001-86	Fitting		1
6	398-14010-47	Reducer Bushing		1
7	X5853	Drain Cock		1
8	398-02001-60	Hex Head Cap Screw		1
9	398-11000-18	Hex Nut		1
10	402-01528-02	Water Inlet Elbow		1
11	102-00747-01	Seal		1
12	402-00695-02	Bushing		1
13	402-01529-02	Cap		1
14	398-08000-07	Grease Fitting		2
15	102-04742-01	Shaft		1
16	102-09075-05	Shim, 0.005"		3
16	102-09075-07	Shim, 0.007"		3
16	102-09075-20	Shim, 0.020"		1
17	102-08993-01	Lock Plate		1
18	298-00092-93	Hex Head Cap Screw		12
19	398-20000-37	Lock Washer		12

(Continued)

GEARBOXES

Rex Model 770

Front Water Entry Option

Item	Part Number	Description	Kit	Quantity
20	102-30517-01	Hub-Torus-Outer		1
21	102-01594-04	"O" Ring		1
22	298-00005-93	Socket Head Cap Screw		3
23	102-09787-01	Gland-Torus		1
24	102-09788-01	Clamp Ring		2
25	102-30516-01	Hub-Torus-Inner		1
26	102-03547-68	"O" Ring		1
27	102-09789-01	Ring-Retainer		1
28	398-02076-10	Hex Head Cap Screw		4
29	102-03299-05	Shim, 0.005"		3
29	102-03299-07	Shim, 0.075"		3
29	102-03299-20	Shim, 0.020"		2
30	402-01770-02	Cover-Drum Hub		1
31	298-00093-93	Cap Screw		6
32	398-14000-37	Reducing Bushing		1
33	502-01999-80	Water Nozzle		1
34	83073	Rubber Sleeve		1
35	X7406	Hose Clamp		1
36	298-00010-93	Hex Head Cap Screw		1
37	298-00003-71	Hex Nut		1



GEARBOXES





GEARBOXES

Part # GB 1060 Rebuilt only
Rockwell AMD 610 Series of Gearboxes
TL Smith and Jaeger Mixer both used this gearbox. There are still mixers around with working units. This gearbox is no longer in production but parts and rebuilt units are available.

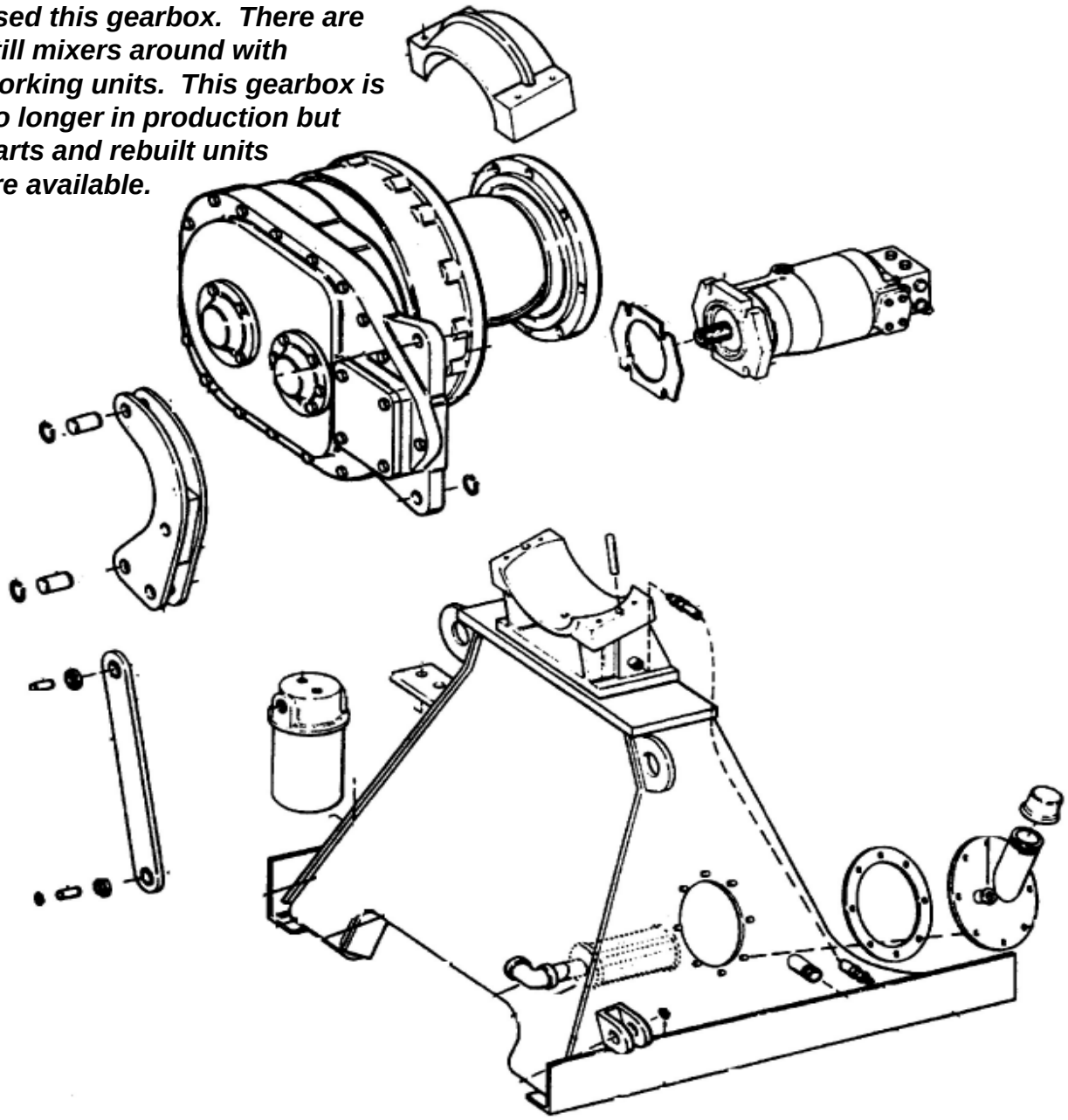

GEARBOXES

Part # GB 1070 Rebuilt only
Rockwell Chain Drive Gearbox
Model # T261
Rebuilt units are available -Concrete Mixer Supply can supply parts for the gearbox, mixer chain, sprockets, and pins & bushings as needed



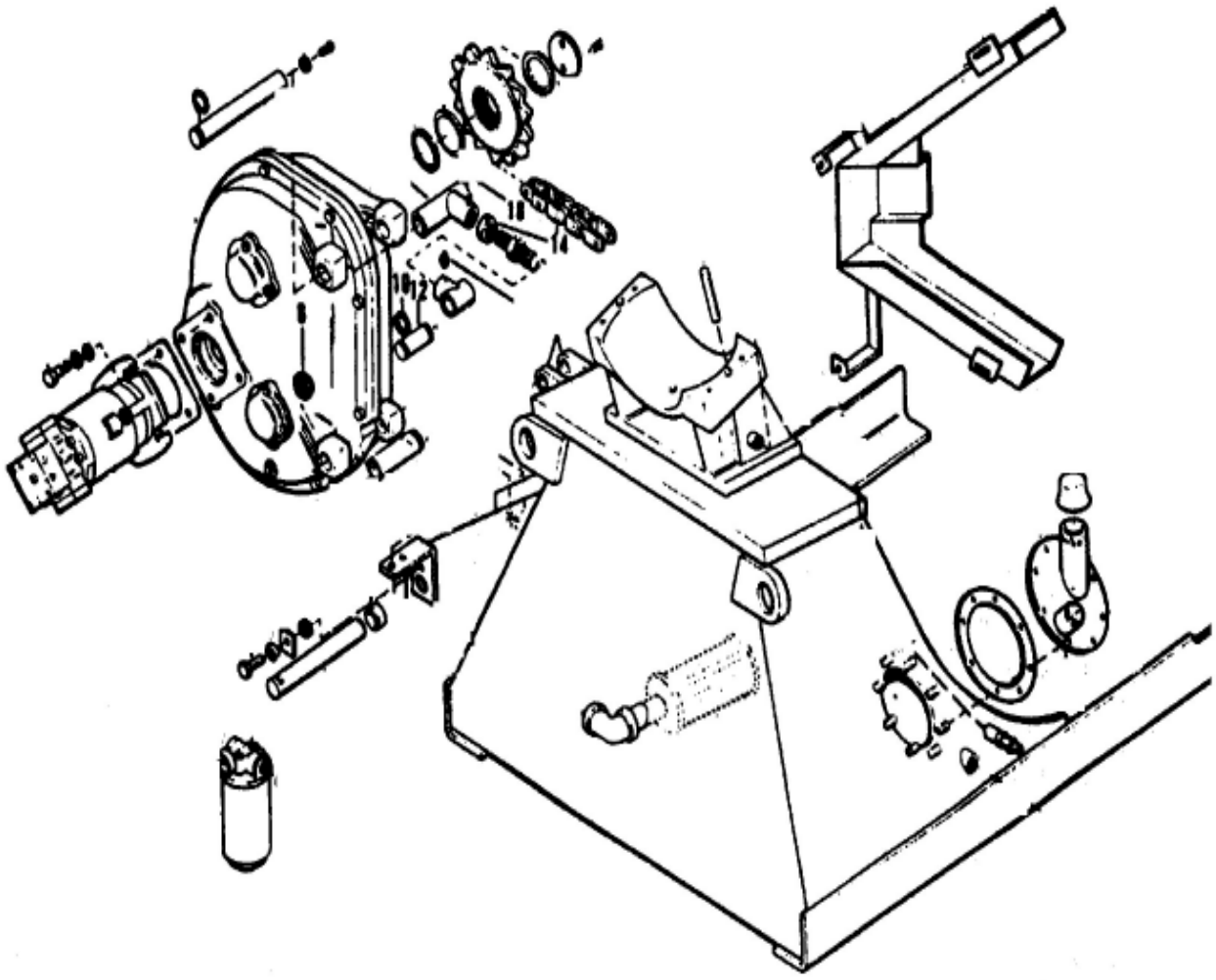

GEARBOXES

Part # GB 1090 Rebuilt only
Funk Multi Axial Gearbox

CMC used this gearbox on alot of the Front Discharge Mixers as well the standard Rear Discharge. Rebuilt gearboxes are available.

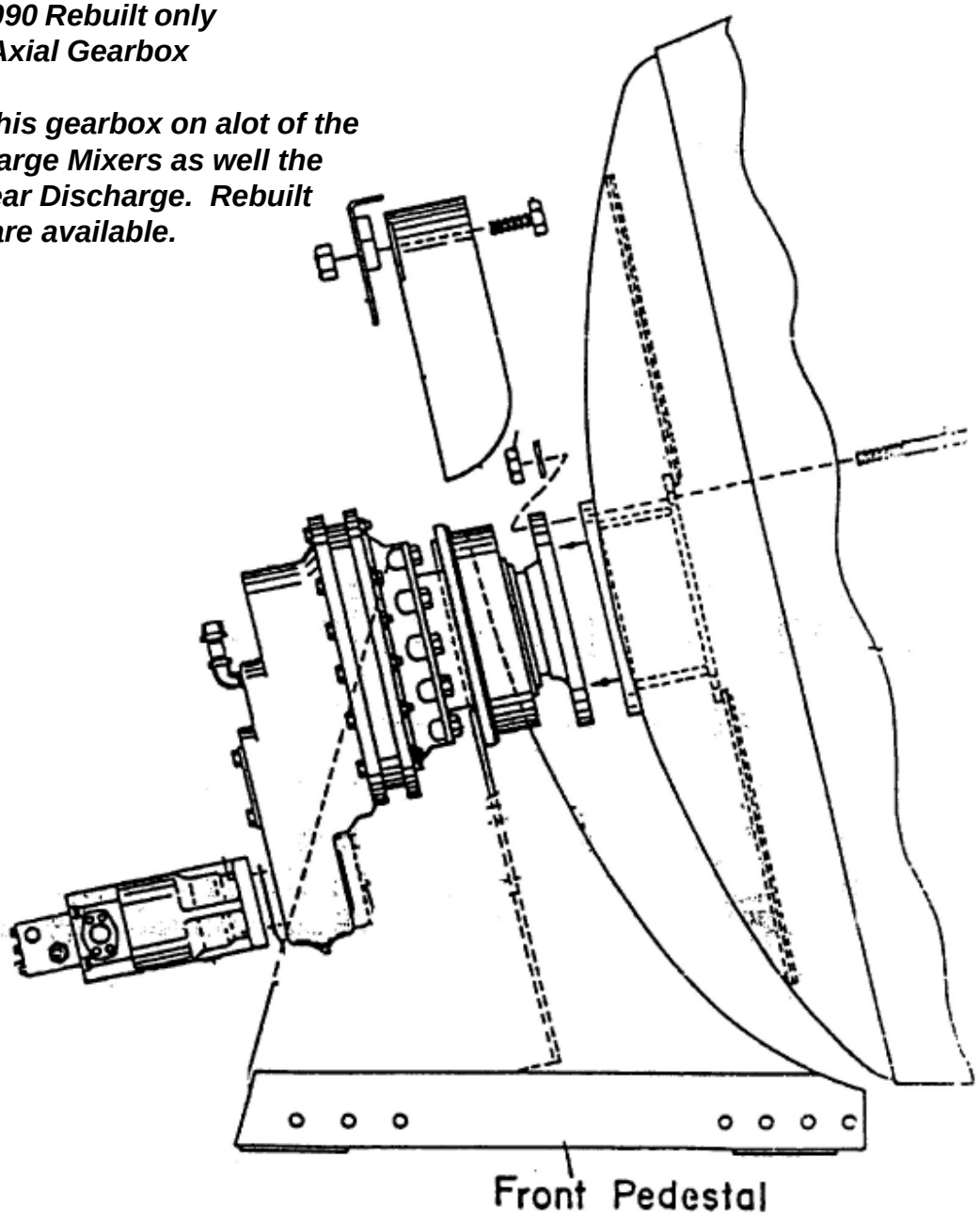

GEARBOXES

Part # GB 1080 Rebuilt Only
FUNK RUBBER CUP GEARBOX

CMC is this gearbox on a lot of mixers before switching to the ZF PK 4100. These gearboxes can still be rebuilt and the rubber cups are available as well.

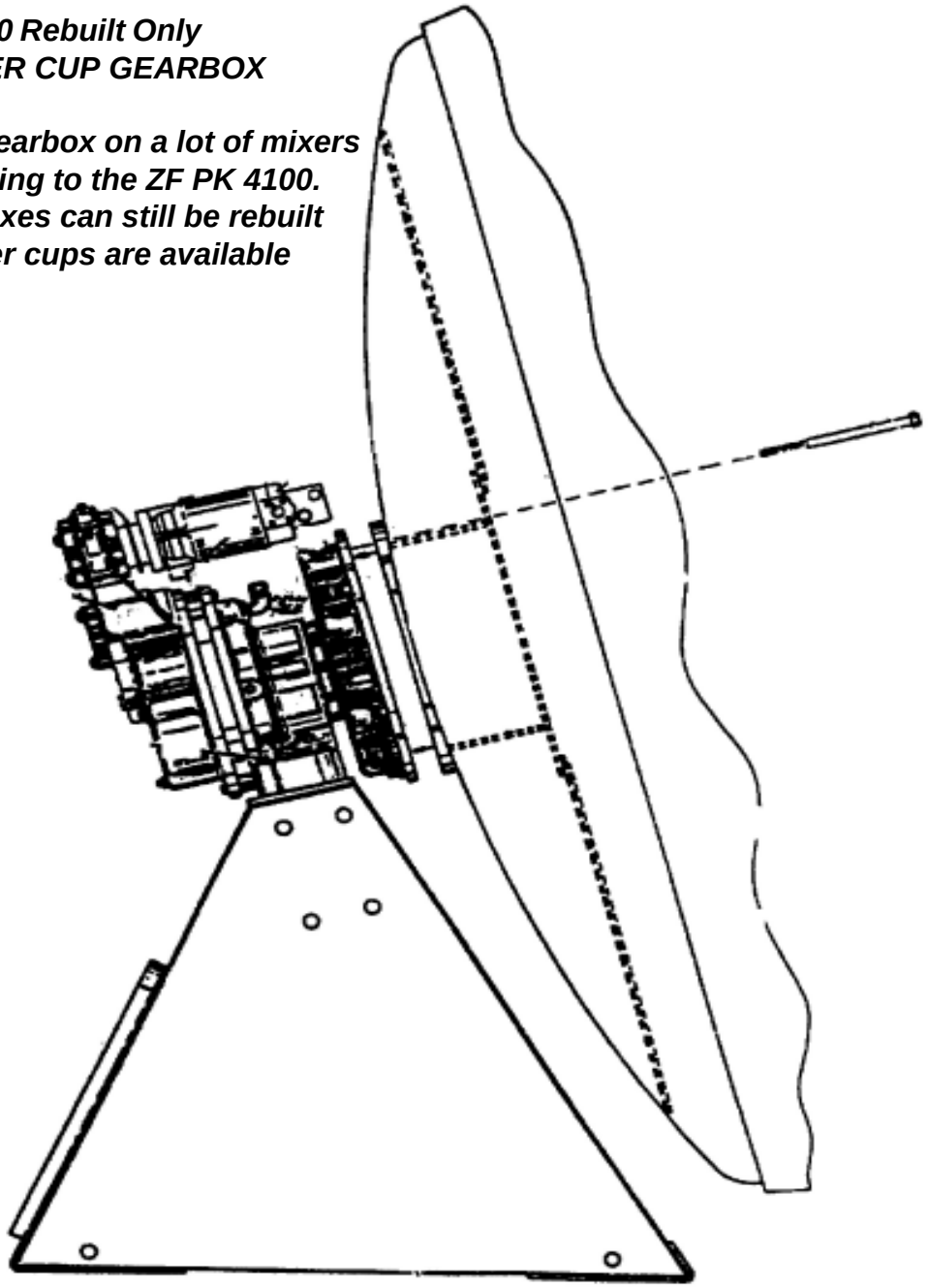

GEARBOXES

INSTRUCTIONS FOR RETURNING OF CORES

Concrete Mixer Supply will arrange to have your pump, motor or gearbox cores picked up and returned to our supplier at no cost to you. Please follow these instructions:

1. Make certain that all hydraulic oils have been drained out of the unit(s) and plug all open ports before shipping. Securely package the unit(s) and band on a pallet.
2. Contact us at 1-877-254-0715 and we will arrange for the carrier to pick up this unit(s) when ready.
3. A bill of lading will be supplied to you. Please make a copy for yourself and give one to the trucking company. When the trucking company arrives have them sign it and apply a pro # sticker. If not, ask the driver to provide a pro # before leaving with this shipment.
4. In order for Concrete Mixer Supply to issue you a credit for returning these cores, please fax a copy of the signed bill of lading with the Pro # on the form. Fax this to my office at 716-701-6747. We will see to it that you receive your credit as soon as possible. If you do not receive a credit memo, please give us a call at 1-877-254-0715.

Thank you,

Mike

Rick Pavia and Mike Jones

Thank you for giving us the opportunity to provide you this service.

GEARBOXES

ZF PK4100



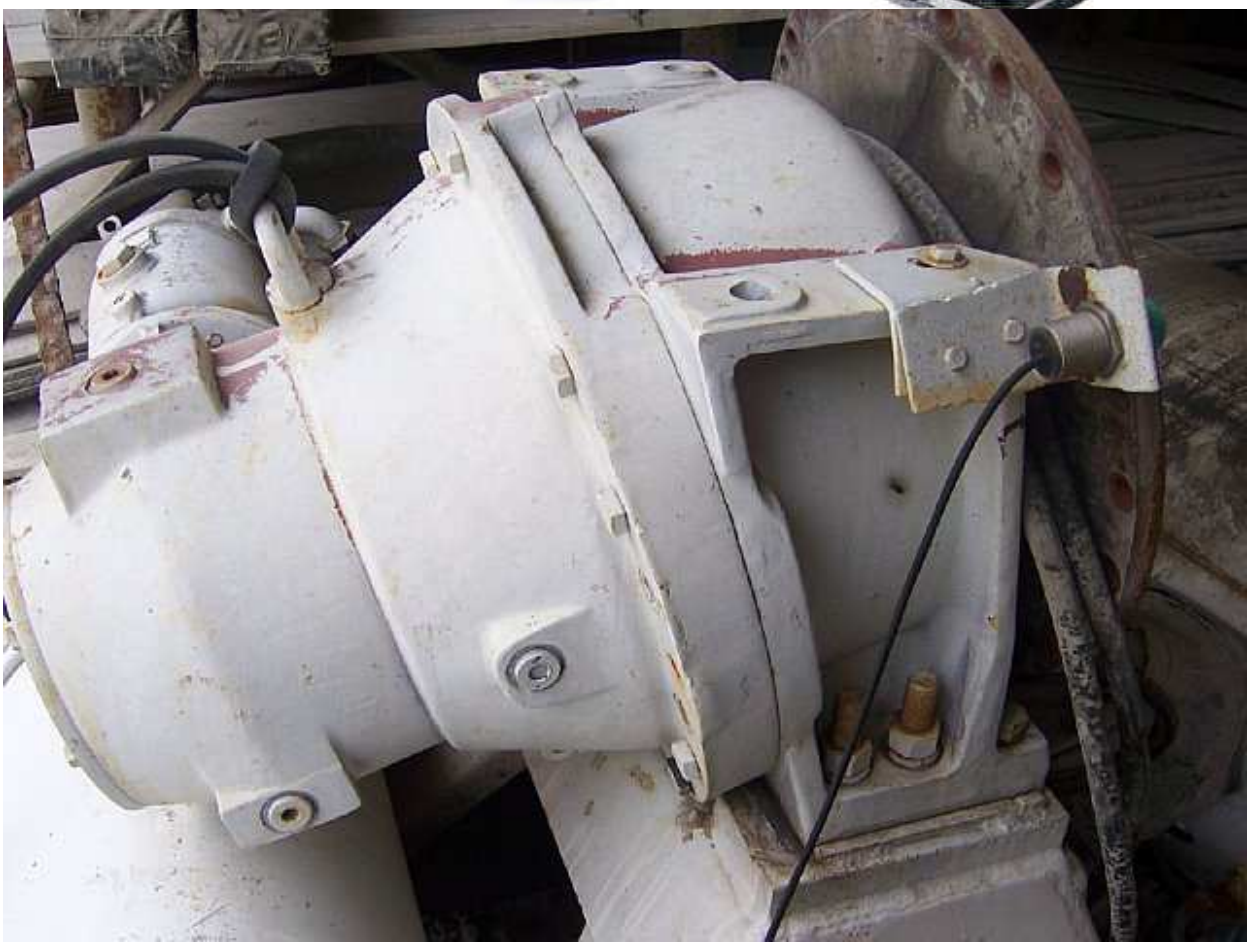

GEARBOXES

PK4100 GEARBOX





GEARBOXES

PK4100 GEARBOX





GEARBOXES

PK7500 GEARBOX





GEARBOXES

P5300 GEARBOX





GEARBOXES

DOES YOU GEARBOX LOOK LIKE THIS ONE? (PK STYLE)



DOES YOU GEARBOX LOOK LIKE THIS ONE? (P STYLE)

