VEVOR®

TOUGH TOOLS, HALF PRICE

Technical Support and E-Warranty Certificate www.vevor.com/support

ELECTRIC REBAR CUTTER

USER MANUAL

MODEL: RC-16 RC-20 RC-22 RC-25

We continue to be committed to provide you tools with competitive price.
"Save Half", "Half Price" or any other similar expressions used by us only represents an estimate of savings you might benefit from buying certain tools with us compared to the major top brands and doses not necessarily mean to cover all categories of tools offered by us. You are kindly reminded to verify carefully when you are placing an order with us if you are actually saving half in comparison with the top major brands.

VEVOR®

TOUGH TOOLS, HALF PRICE

ELECTRIC REBAR CUTTER

RC-16 RC-20 RC-22 RC-25



NEED HELP? CONTACT US!

Have product questions? Need technical support? Please feel free to contact us:

CustomerService@vevor.com

This is the original instruction, please read all manual instructions carefully before operating. VEVOR reserves a clear interpretation of our user manual. The appearance of the product shall be subject to the product you received. Please forgive us that we won't inform you again if there are any technology or software updates on our product.

Read this instructions carefully before attempting to use cutters. Ignorance of proper operating procedure can lead to accidents. If in doubt about any procedure, contact your nearest authorized agent.

Contents

General Safety Precautions 2
Parts and Specifications.....8
Operating Instructions 9
- Pre-use Checks 9
- Warm up 10
- Stopper Adjustment 10
- Cutting 10
- Points of Attention 10

Maintenance 11
- Cutter Blocks 11
- Cleaning 11
- Oil Level Check 12
- Oil Change 13
- Bolt Tightness 13
- Carbon Brushes 13

General Safety Precautions

⚠ **WARNING:** Read all safety warnings, instructions, illustrations and specifications provided with this electric rebar cutter. Failure to follow all instructions listed below may result in electric shock, fire and/or serious injury.

SAVE THESE INSTRUCTIONS for future reference. The term "power tool" in the safety instructions refers to your electric rebar cutter.

Symbol	Symbol Description
	Warning - To reduce the risk of injury, the user must read instructions manual carefully.
	This symbol, placed before a safety comment, indicates a kind of precaution, warning, or danger. Ignoring this warning may lead to an accident. To reduce the risk of injury, fire, or electrocution, please follow the recommendation below.
	**Danger!** Risk of personal injury or environmental damage! Risk of electric shock! Risk of personal injury by electric shock!
	Warning- Be sure to wear ear protectors when using this product.
	Warning- Be sure to wear eye protectors when using this product.
	Warning- Be sure to wear gloves when using this product.
	This product is of protection class II. That means it is equipped with enhanced or double insulation.

General Power Tool Safety Warnings - Work area safety

a) Keep work area clean and well lit. Cluttered or dark areas invite accidents.

b) Do not operate power tools in explosive atmospheres, such as in the presence of flammable liquids, gases or dust. Power tools create sparks that may ignite the dust or fumes.

c) Keep children and bystanders away while operating a power tool. Distractions can cause you to lose control.

General Power Tool Safety Warnings - Electrical safety

a) Power tool plugs must match the outlet. Never modify the plug in any way. Do not use any adapter plugs with earthed (grounded) power tools. Unmodified plugs and matching outlets will reduce risk of electric shock.

b) Avoid body contact with earthed or grounded surfaces, such as pipes, radiators, ranges and refrigerators. There is an increased risk of electric shock if your body is earthed or grounded.

c) Do not expose power tools to rain or wet conditions. Water entering a power tool will increase the risk of electric shock.

d) Do not abuse the cord. Never use the cord for carrying, pulling or unplugging the power tool. Keep cord away from heat, oil, sharp edges or moving parts. Damaged or entangled cords increase the risk of electric shock.

e) When operating a power tool outdoors, use an extension cord suitable for outdoor use. Using a cord suitable for outdoor use reduces the risk of electric shock.

f) If operating a power tool in a damp location is unavoidable, use a residual current device (RCD) protected supply. Use of an RCD reduces the risk of electric shock.

General Power Tool Safety Warnings - Personal safety

a) Stay alert, watch what you are doing and use common sense when operating a power tool. Do not use a power tool while you are tired or under the influence of drugs, alcohol or medication. A moment of inattention while operating power tools may result in serious personal injury.

b)Use personal protective equipment. Always wear eye protection. Protective equipment such as a dust mask, non-skid safety shoes, hard hat or hearing protection for appropriate conditions will reduce personal injuries.

c) Prevent unintentional starting. Ensure the switch is off-position before connecting to power source and/or battery pack, picking up or carrying the tool. Carrying power tools with your finger on the switch or energizing power tools with the switch on invites accidents.

d) Remove any adjusting key or wrench before turning the power tool on. A wrench or a key left attached to a rotating part of the power tool may result in personal

injury.
e) Refrain from overreaching. Keep proper footing and balance at all times. This enables better control of the power tool in unexpected situations.
f) Dress properly. Do not wear loose clothing or jewelry. Keep your hair and clothing away from moving parts. Loose clothes,jewelry or long hair can be caught in moving parts.
g) If devices are provided for connecting dust extraction and collection facilities, ensure these are connected and properly used. Use of dust collection can reduce dust-related hazards.
h) Do not let familiarity gained from frequent use of tools make you to become complacent and ignore tool safety principles. A careless action can cause severe injury within a fraction of a second.

Power tool use and care
a) Do not force the power tool. Use the correct power tool for your application. The correct power tool will do the job better and safer at the rate for which it was designed.
b) Do not use the power tool if the switch does not turn it on and off. Any power tool that cannot be controlled with the switch is dangerous and must be repaired.
c) Disconnect the plug from the power source and/or remove the battery pack, if detachable, from the power tool before making any adjustments, changing accessories, or storing power tools. Such preventive safety measures reduce the risk of starting the power tool accidentally.
d) Store idle power tools out of the reach of children and only allow persons familiar with the power tool or these instructions to operate the power tool.
e) Maintain power tools and accessories. Check for misalignment or binding of moving parts, breakage of parts and any other condition that may affect the power tools operation. If damaged, have the power tool repaired before use. Many accidents are caused by poorly maintained power tools.
f) Keep cutting tools sharp and clean. Properly maintained cutting tools with sharp cutting edges are less likely to bind and are easier to control.
g) Use the power tool, accessories and tool bits etc. in accordance with these instructions, taking into account the working conditions and the work to be

performed. Use of the power tool for operations different from those intended could result in a hazardous situation.
h) Keep handles and grasping surfaces dry, clean and free from oil and grease. Slippery handles and grasping surfaces do not allow for safe handling and control of the tool in unexpected situations.

Service
Have a qualified repair person service your power tool using only identical replacement parts. This will ensure that the safety of the power tool is maintained.

Usage
Use rebar cutters on concrete re-forcing bars only.

Restrict use to designated materials
There is always a chance that the cut end may shoot out, especially if less than 30cm in length. Exceeding designated material specifications greatly increases this risk and damages the tool. Do not attempt to cut rebars. Harder, thicker or thinner than those specified.

Use eye protection
Wear safety goggles , safety glassed with side shields or a face shield when using cutter.

Provide safety barriers
Erect safety screens to protect co-workers from possible flying ends. Place safety screen under the rebar when working in high places.

Exercise proper control
Hold cutter firmly and maintain proper footing and balance. Do not over-reach when working in high place , secure cutter to scaffolding with a safety rope. Check that power cord is not fouled and keep cord away from sharp edges and heat. Check that all adjusting wrenches have been removed before using cutter.

Guard against electric shock

To avoid possible electric shock, do not handle the cutter with wet hands or use the cutter in rain or damp places. In addition, be aware of all power lines, electric circuits, and other hazards that may be contacted, especially those below the surface or otherwise hidden from view.

Unplug tool

Disconnect cutter from outlet when not in use and before cleaning, adjusting or servicing. Do not disconnect plug from outlet by pulling the cord. Always check that the switch lock if OFF before plugging in.

Beware of environment

Do not use cutter in the presence of flammable materials (e.g. Paint, thinner,petroleum products, adhesives).

Do not use cutter in a possibly lighted and clear of obstructions. Operator should at all times have an unobstructed view of the cutter, rebar and surrounding area.

Wear proper apparel

Do not wear loose clothes, dangling objects or jewellery. Restrain long hair. The use of a safety-helmet and rubber soled boots is recommended . If safety gloves are worn, be especially careful that gloves does not get caught in moving parts.

Keep visitors away

Keep all visitors at a safe distance from the work area for their own protection and to prevent distraction of the operator.

Maintain cutter with care

Inspect cutter before each application. Faulty or loose cutter blocks could result in personal injury . Keep handle dry, clean and free from oil and/or grease. Keep housing and piston free of dirt and iron filings. Check that no screws or bolts are loose or missing. Following instruction for maintenance. Inspect the switch, cord, plug , and extension cable regularly.

Store carefully

When not in use, store the cutter and accessories in a dry place where unauthorized people can't access them.

Parts and specifications

①. Housing
②. Cutter blocks
③. Adjustable stopper
④. Side handle (detachable)
⑤. Cylinder
⑥. Pump case
⑦. Oil-plug
⑧. Motor
⑨. Switch
⑩. Carbon-brush caps

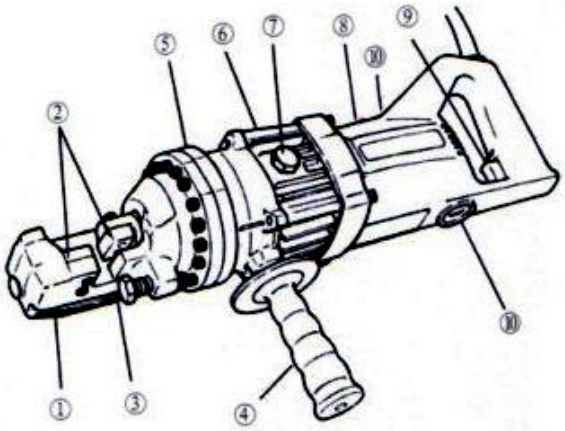

Main Parameters

Model	RC-16	RC-20	RC-22	RC-25
Voltage ± 5%	110VAC	110VAC	110VAC	110VAC
Wattage	900 W	1250 W	1350W	1700W

Operating Instructions

! Caution: Indicates hazard that could result in minor personal injury and/or product damage.
Care: Indicates hazard that will result in product damage.

Pre-use checks

1. Check oil level.

2. Check condition of cutter blocks and tightness of cutter block bolts.
! Caution: Using loose or cracked cutter blocks may result in injury to operators as well as damage to unit.

3. Check that the power source is appropriate for the cutter.
Care: If voltage is too high , the motor will burn out. If the voltage is too low, insufficient power will be generated. Never use DC current.

4. Check that power supply is properly earthed.
! Caution: Failure to earth power supply may result in electric shock to operator.

5. Check that cord is undamaged and that plug is not loose.
! Caution: Cut or abraded covering could result in a short and electric shock to operator.

If an extension cable is to be used, make sure that it is undamaged and that it is the proper thickness for the length.

Cable size / **Cable length**	110V
	AWG
Up to 10 m	16
Up to 15 m	14
Up to 30 m	10

Warm-up
In cold weather, warm unit for 30-60 seconds so that the hydraulic oil reaches the proper viscosity. Pull trigger -switch to extend piston and release when it has reached its full stroke, Repeat 15-20 times.

Stopper adjustment
The adjustable stopper function to maintain the rebar in the correct position during cutting and must be properly set for each size of rebar before making a cut.
Screw in stopper to provide sufficient clearance for rebar.

Insert rebar fully into U-shaped support. Make sure that rebar is resting on the base of the stopper.
Keeping rebar at right angels (90°) to front cutter block, screw out stopper until it touches the rebar. Once set, the stooper needs no further adjustment while cutting rebar of the same diameter, but must be re-set for a different size rebar.
! Caution: Failure to correctly set the stopper will result in excessive wear of cutter block and may cause cut end to fly out.

Cutting
Insert rebar between stopper and front cutter block, ensuring it is properly seated in U-shaped support.
Pull trigger -switch and keep depressed while piston advances and rebar is cut. (If switch is released at an intermediate point, piston will stop.)
When cut is completed, release switch. Piston retracts automatically. (Note that switch can't be re-activated until piston has fully retracted.)

Points of attention
1. Be careful when cutting off short lengths (30cm or less) as the cut end tends to fly out.
! Caution: Flying ends are a hazard to all personnel in the vicinity. Erect safety screens.
2. Do not cover air vents.
Care: If events are covered , motor will overheat and may burn out.
3. Power will drop if hydraulic oil exceeds 70 ° (158 F) in temperature.
Allow until to cool before resuming operation. (Be particularly careful in summer, when the aluminum pump case heats up quicker.)
4. If a drop in power is observed and motor is unusually hot, check carbon brush .
If the piston fails to retract completely, push the rear cutter block backward to retract the piton manually.
! Caution: Use a rebar or flat metal bar for this purpose. Never push cutter block with any part of the hand, even if gloved.
Once piston has been retracted , pull trigger-switch long enough to partially

advance piston. Unplug unit. And check piston and housing for accumulated dust iron filings that may be jamming the piston. After cleaning, piston still does not automatically retract when fully extended, the piston itself may be damaged. Return the unit to an authorized agent for repair.

Maintenance

Cutter blocks

Before using, always check that the two bolts on each cutter block are properly tightened. Using a loose block will result in damage to block and housing. Also check condition of cutter blocks. If either cutting edge is dull or chipped, remove retaining bolts and rotate both blocks so that two new edges come into use. Replace and tighten bolts (each block has four cutting edges)

When all four cutting edges have been used or if either block is cracked or otherwise damaged, replace both block.

! Caution: A loose or cracked block may injure the operator .

Cleaning

Cleaning cutter after use.

! Caution: Wear gloves to protect hands from metal splinters. Do not use an air-gun, blasting with air can cause metal filing and/or dust to get into eyes and respiratory system.

1.Disconnect unit.

2.Wipe or brush away all dirt and metal filings. Pay particular attention to the lower half of the piston, where dirt is more easily accumulated.

Oil-level check

As the cutters are hydraulically operated, the oil level must be checked at frequent intervals, preferably daily. Failure to maintain the oil properly results in a drop in pressure and loss of cutting power.

! Caution : Hydraulic oil is highly flammable. Keep away from sparks and naked flame. Do not smoke.

! Caution: Hydraulic oil may cause inflammation of the eyes and skin. If ingested,

it will cause diarrhoea and vomiting.
In case of eye contact, rinse in clean water for at least 15 minutes and consult a physician. In case of skin contact, wash thoroughly with soap and water.
In case of ingestion, consult a physician immediately. Do not deliberately induce vomiting.
1.Oil should be warm but not hot. Warm up unit if cold.
2.Adjust stopper and make three or four cuts, noting exactly at what point the rebar is actually breaking.
3.Pinch a short piece of rebar, stopping just before it breaks off. Unplug unit from power source.
4.With partially severed rebar in place, turn unit over so that oil-plug is uppermost. (If unit is hot, allow to cool down.)
5.Remove oil-plug and seal-washer (packing)
! Caution: Never remove oil-plug when unit is hot or oil will spurt out.
6.check that oil is level with bottom of plug hole. (i.e. That pump case is full to the brim). If oil level is too low, top up with 20-weight hydraulic oil with anti-foam and anti-abrasion properties. (ISO viscosity grade VG46. E.g. Shell oil tellus 46, mobil oil DTE-25 OR Esso uni power SQ46.)
7.After topping up, extract air from system. Gently tilt cutter lengthwise and return it to a level position. Top up again and tilt in the opposite direction . Repeat this process until all air has been extracted.
Care: Cutter can't function properly if oil contains air bubbles.
8.Replace seal washer (packing) and plug. Connect cutter to power source and completely serve rebar.

Oil change

The hydraulic oil should be changed at least once a year. Sooner if it appears dirty.
1.Unplug unit from power source. Remove oil plug and packing. Turn cutter over and drain oil into a suitable receptacle. When oil ceases to drain out, tilt unit to rear so that oil trapped in the piston housing can run out. When housing is empty, tilt unit in the opposite direction to empty the residue in the pump case.
2.With drain-hole uppermost, slowly fill the unit with fresh oil. Replace plug and lightly tighten. Connect unit to power source and advance piston two or three times.

Unplug unit and remove oil-plug . Top up oil level and replace plug.
3.Finally follow procedure for oil level check.
Note: Dispose of hydraulic oil following local regulations. Do not pour into the sea, river, lake or drains.

Bolt tightness

Once a week or after every 500 cuts, check the tightness of all bolts, especially those securing the housing to the cylinder. Loose bolts will result in a loss of power.

Carbon brushes

Inspect the two carbon brushes at least once every two months. (normal brush life is 200 hours.)
Care: Worn brushes will result in power loss, cause the motor to run hot and irreparably damage the armature's commutator.
1.Disconnect unit
2.Unscrew both brush caps and pull out carbon brushes.
3.Replace brushes if less than 6 cm in length.

RC-16 NRC-20

Portable Rebar Cutter Parts List

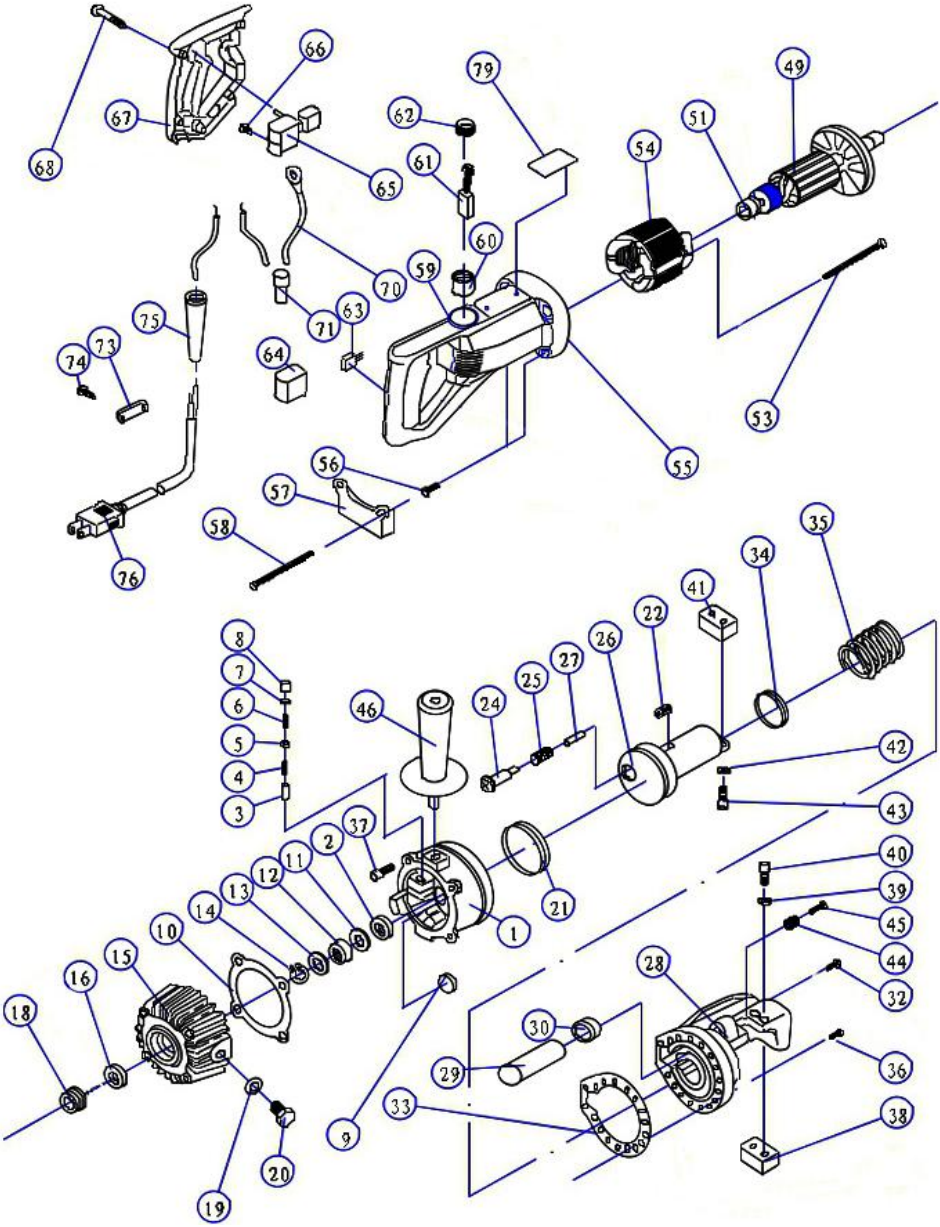

No.	Parts Name	No.	Parts Name	No.	Parts Name
1	Cylinder	27	Spring	53	Tapping Screw M4×60
2	Ball Bearing 698	28	Cutter Head	54	Stator Coil
3	Piston	29	Air Bag	55	Motor Housing
4	Return Spring	30	Nut	56	Locating Sleeve
5	Oil Valve	31	**	57	Foot Stand
6	Valve Spring	32	Screw	58	Hexagon Socket Screw M5×85
7	Spring Guide	33	Gasket	59	Hexagon Socket Set Screw M4×5
8	Pump Seal	34	Seal 40*30*6	60	Brush Holder
9	Magnet Filter	35	Big Spring	61	Carbon Brush
10	Gasket	36	Hexagon Socket Screw M6 x 20	62	Brush Cap
11	Manganese Steel Gasket	37	Hexagon Socket Screw M6 x 20	63	Condenser
12	Needle Bearing 12×24×10	38	Cutter Block / Blade	64	Condenser Cover
13	Manganese Steel Gasket	39	Pring Washer M5	65	Switch

14	Snap Ring	40	Hexagon Socket Screw M5 x 18	66	Rubber Push Button
15	Snap Ring	41	Cutter Block / Blade	67	Housing Cover
16	Pump Case Oil Seal 15×25×7	42	Spring Washer Φ5	68	Tapping Screw M4x20
17	**	43	Hexagon Socket Screw M5×16	69	**
18	Bearing 6002	44	Spring	70	**
19	Compound Gasket Φ10	45	Hex Socket Screw M10x40	71	Safety Cap
20	Hexagonal Bolt M10×16	46	Handle	72	**
21	Gasket Ring 70×60×6	47	**	73	Cord Holder
22	Pin 8×25	48	**	74	Taping Screw M4x14
23	**	49	Armature	75	Cord Armor
24	Return Rod	50	**	76	Electrical Cord
25	Spring	51	Bearing 608	77	**
26	Cutter Rod	52	**	78	**
				79	Name Plate

RC-20, RC-22, RC-25
Portable Rebar Cutter Parts List

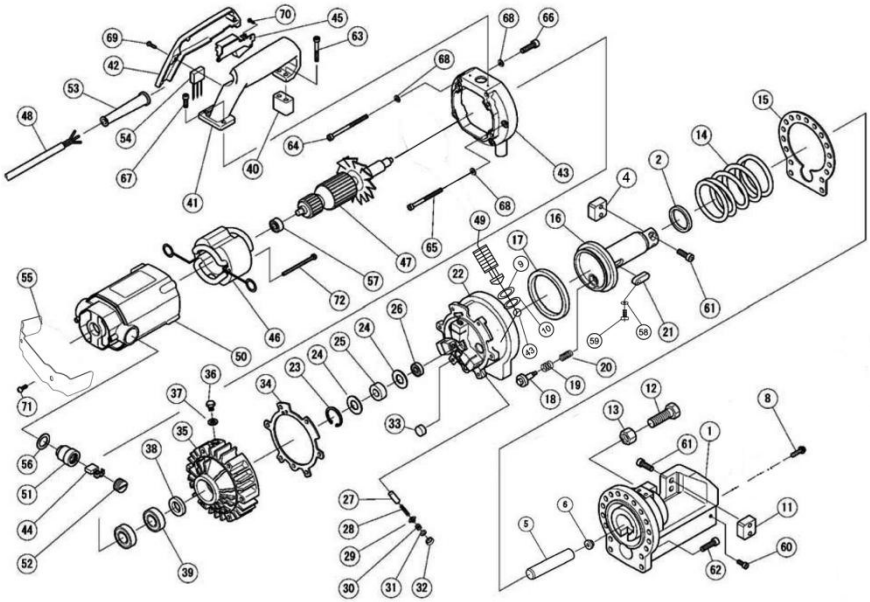

No.	Parts Name	No.	Parts Name	No.	Parts Name
1	Cutter Head	27	Piston	53	Cable Armor
2	Gasket Ring 40×50×6	28	Spring	54	**
3	**	29	Oil Valve	55	**
4	Cutter Block / Blade	30	Spring	56	Gum Washer
5	Air Bag	31	Spring Guide	57	Bearing 6200
6	Nut	32	Oil Seal	58	Wave Washer
7	**	33	Filter Magnet	59	Bolt M4*8
8	Screw	34	Gasket	60	Bolt M8*25
9	O Ring	35	Pump Case	61	Bolt M8*30
10	O Ring	36	Hexagonal Screw M10×16	62	Bolt M8*30

11	Cutter Block / Blade	37	Compound Gasket Φ10	63	Bolt M6*20
12	Hexagonal Screw	38	Oil Seal 20×35×8	64	Bolt M6*20
13	Nut	39	Bearing 104	65	Bolt M6*25
14	Big Spring	40	Connecting Block	66	Bolt M6*50
15	Gasket	41	Handle	67	Bolt M6*20
16	Cutter Rod	42	Handle Cover	68	Washer
17	Gasket Ring 80×95×9	43	Photosphere Φ4.763	69	Bolt M4*12
18	Return Shaft	44	Carbon Brush	70	Bolt M4*8
19	Spring	45	Switch	71	**
20	Spring	46	Stator Coil	72	Bolt M5*75
21	Pin 12×40	47	Armature	73	Connecting Plate
22	Cylinder	48	Electrical Cord		
23	Snap Ring	49	Bolt		
24	Manganese Steel Gasket	50	Motor Housing		
25	Needle Bearing 14×30×12	51	Carbon Brush Holder		
26	Bearing 609	52	Carbon Brush Cap		

VEVOR®

TOUGH TOOLS, HALF PRICE

Technical Support and E-Warranty Certificate

www.vevor.com/support