STOWAWAY

Tailgates By THIEMAN

ST 22 & ST 31
INSTALLATION INSTRUCTIONS

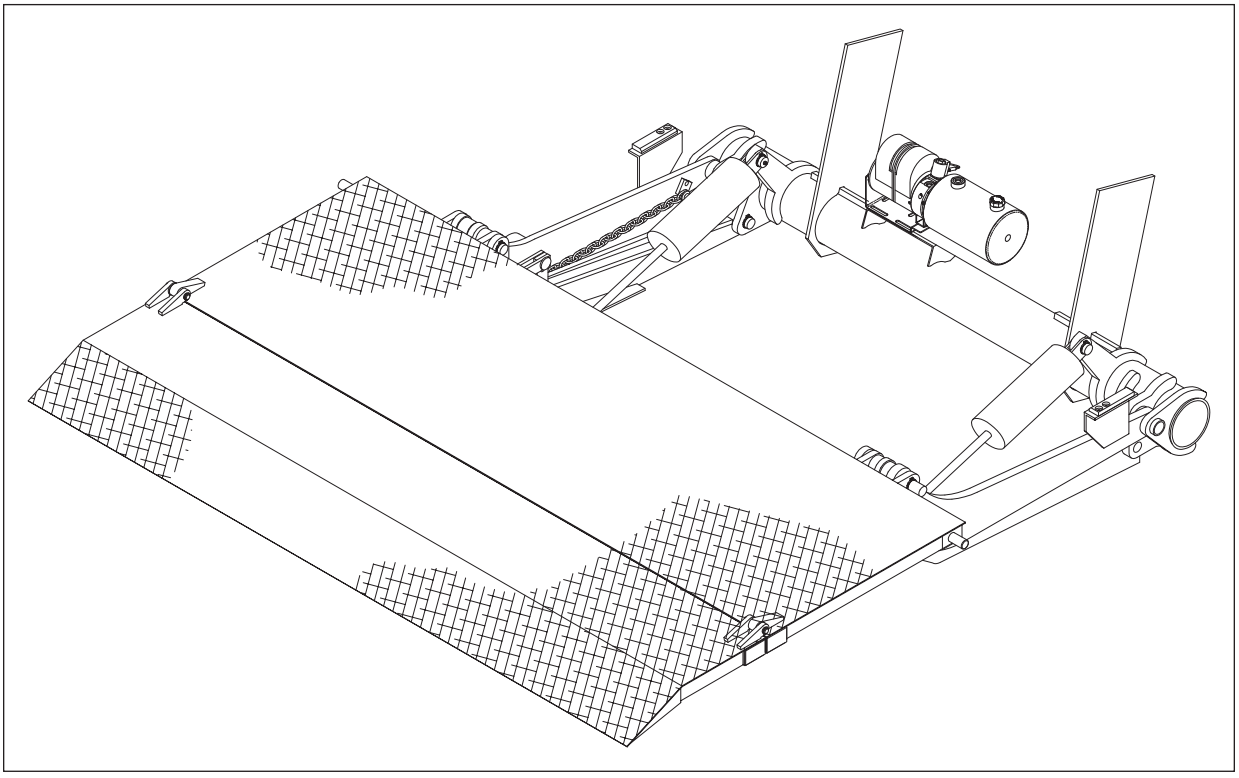

ST 31 SHOWN

⚠ IMPORTANT! KEEP IN VEHICLE!

PLEASE READ AND UNDERSTAND THE CONTENTS OF THIS MANUAL BEFORE OPERATING THE EQUIPMENT.

NTEA THE ASSOCIATION FOR THE WORK TRUCK INDUSTRY MEMBER

THIEMAN TAILGATES, INC.
600 East Wayne Street
Celina, Ohio 45822
Phone: 419-586-7727 Fax: 419-586-9724

ATTENTION INSTALLERS:

Changes are made periodically to the installation procedure to comply with engineering product changes. To ensure proper liftgate operation, it is **VERY IMPORTANT** to read and understand the installation instructions before attempting an installation. Installers also **MUST** read and understand the liftgate's Owner's Manual before installing the liftgate, so they can operate the liftgate safely as required during different stages of the installation process. **NEVER** perform a modfication on the liftgate, which is not specifically covered in this manual or which is unauthorized by Thieman. Modifications may result in failure of the liftgate and may create hazards for liftgate installers, operators, or maintainers. Serious damage, equipment failure, or operator injury could result from improper installation. This equipment **MUST** have all decals applied properly. **FAILURE** to apply all decals properly will **VOID** all warranties! Any installer with questions or doubts should contact Thieman before proceeding.

The ST series are a stow-away style liftgate for use on trucks and trailers. These all have a bed height range 48" to 56".

Notes:

1. The tip of the platform will touch the ground on standard ST series liftgates, but not on gates designed for "level ride." "Ramp ride" is standard and "level ride" is built on special order only.
2. All maximum mounting dimensions are shown with the vehicle empty; all minimum mounting dimensions are shown with the vehicle loaded.
3. Check bed height when parked on a level surface.
4. Check "B" dimension for possible interference with spring hanger bracket. See figure 1.

MOUNTING DIMENSIONS FOR ST22, 31

H	A	B	C	D	E	F	G
48-53.99	25.50	33.00	22.00	5.25	4.00	14.00	6.00
54-56.00	27.00	31.00	22.00	5.25	4.50	15.00	6.00

A - Distance from top of bed to top of trunnion tube
B - Distance needed for spring hanger clearance
C - Distance needed for horizontal frame trim for stowing
D - Frame trim for stowing gate
E - Minimum rear face clearance for platform stowing
F - Vertical frame trim for stowing gate
G - Frame trim for stowing gate
H - Distance from top of bed to the ground

INSTALLATION INSTRUCTIONS

Step 1 Remove banding from gate undercarriage. DO NOT UNFOLD GATE. Inspect for obvious shipping damage or missing parts.

Step 2 Remove wire from curb side spring bracket. See figure 2.

Step 3 Unfold gate on floor.

Step 4 If necessary, notch rear of body as shown in figure 1. Check dimensions of "E" and "B" in chart above.

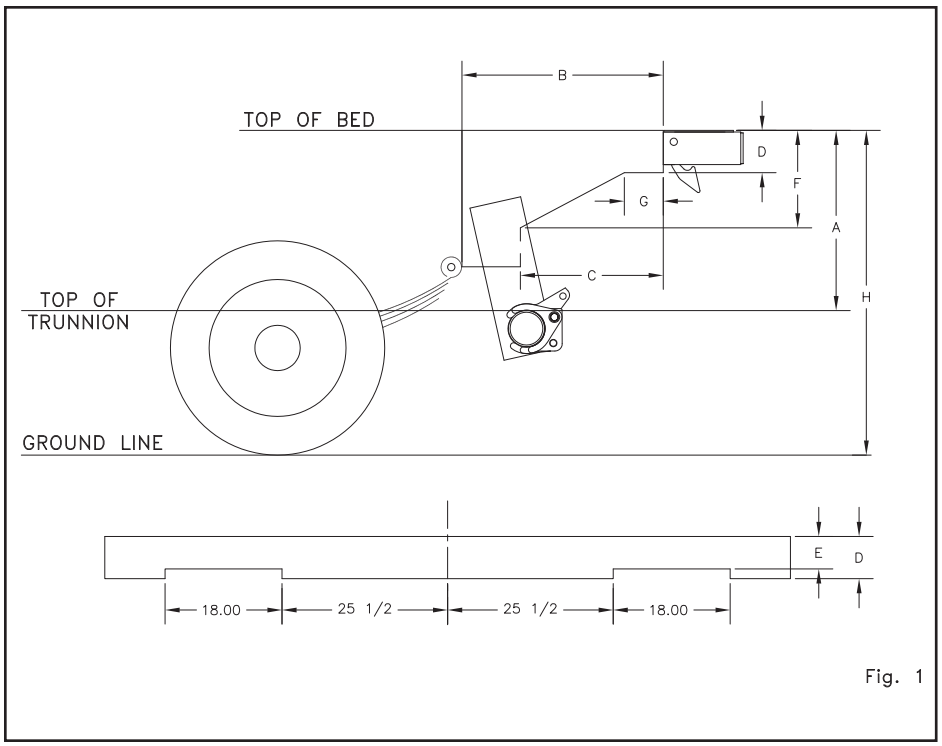

Fig. 1

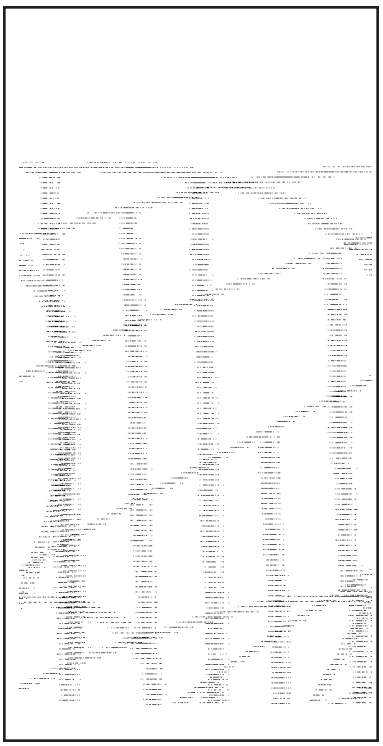

Step 5 Raise the undercarriage in the center of the pivot points so the adjusting screw and pad make firm contact. See figure 3.

Step 6 Tack weld a scrap piece of metal as shown in figure 3. The pad and adjusting screw must make contact and remain so during the entire mounting procedure. If one side touches and the other does not, readjust the one that does not touch so it also makes contact.

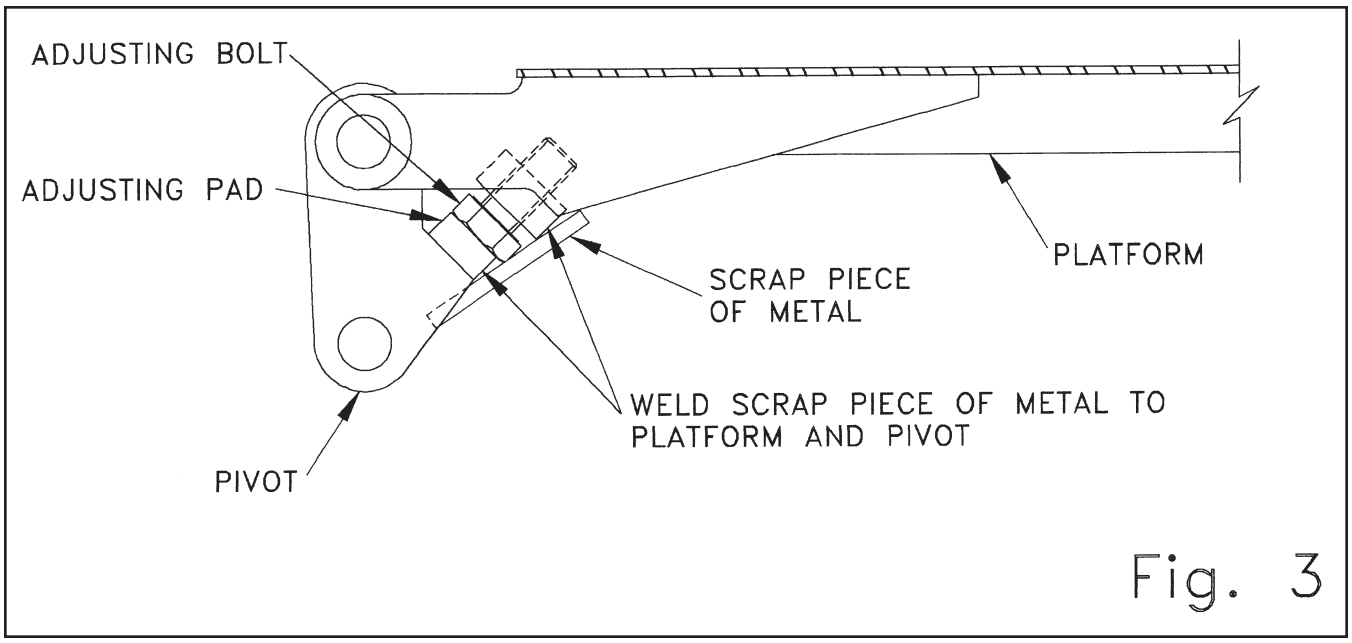

Fig. 3

Step 7 Center and level spacer at rear of body and tack weld into position. Using a forklift or a crane, center and position liftgate behind vehicle and jack trunnion into position. Place a .25" spacer between the spacer and the platform. See figure 4.

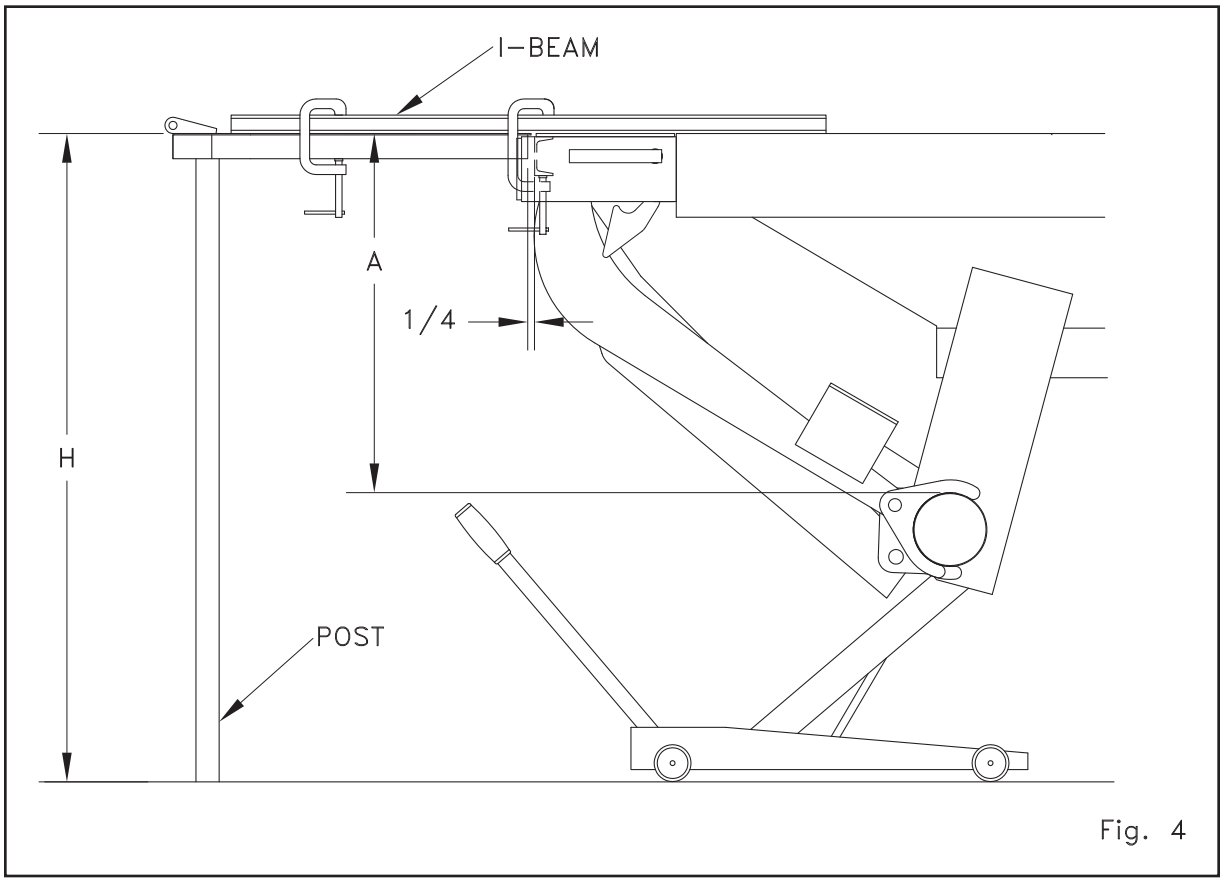

Fig. 4

Step 8 Place barrels or other protective equipment under the platform so that the gate will not fall and injure someone.

Step 9 Attach mounting plates to truck frame by means of (6) .62" mounting bolts per side or by a continuous .18" weld. Weld the mounting plates to the trunnion tube with a .18" weld all around. See figure 5.

Notes: On installations where narrow underframe members are used, the liftgate mounting plates will reach these frame members for mounting purposes; however, the space between the frame members and trunnion now becomes quite large. This lengthy unsupported area may contribute to undesirable springiness under heavy loading. Many installers when faced with this problem extend the underframe support on the existing frame member as shown in figure 6.

On certain equipment such as a lengthened van body, rebuilt trailer or other altered vehicle, where the underframe stops short of the end of the vehicle body frame, extra support must be added to avoid any independent deflection. See figure 7 for bracing suggestions. See figure 1 for clearances.

Step 10 Unpack the hydraulic parts and examine them for damage. The majority of hydraulic systems are either 12VDC or PTO powered. The kit will contain appropriate parts for the power unit ordered. If a special power source or controls were ordered, special instructions will be provided.

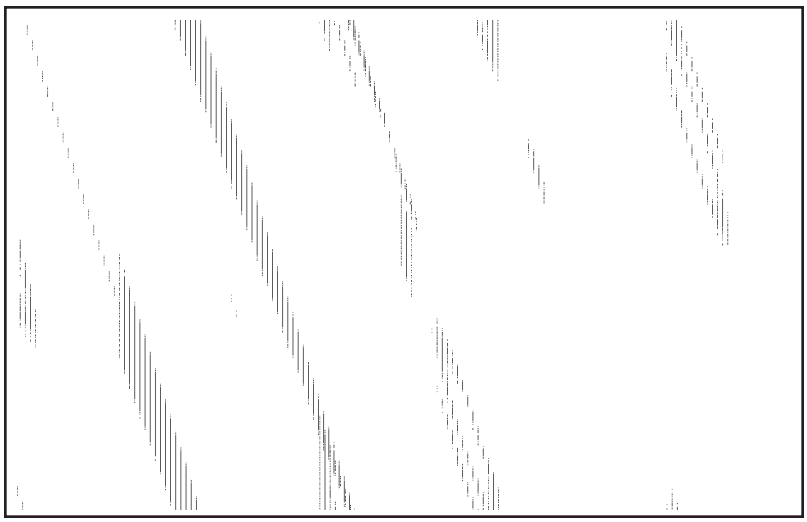

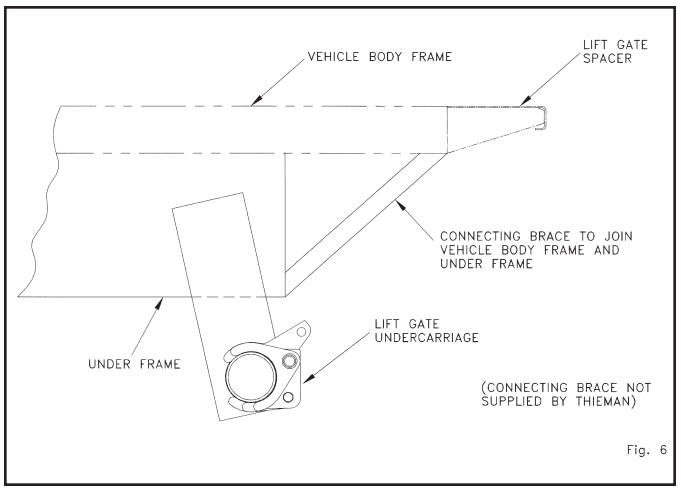

Fig. 6

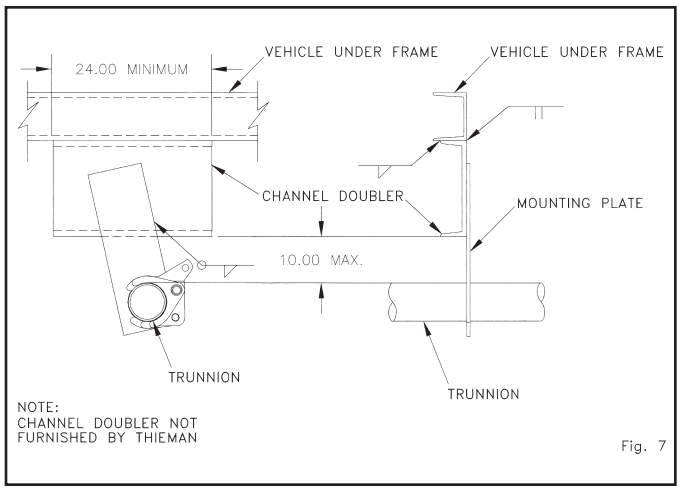

Fig. 7

Step 11 Remove the cylinders from the box and turn the clevis out four turns. Attach the cylinder to the trunnion pivot only with the ports pointing downward; install the pins and retaining rings.

POWER UNIT INSTALLATION GUIDELINES

1. The most common cause of hydraulic system malfunction or failure is the contamination of the hydraulic fluid.
2. Our product suppliers have extensively cleaned and tested the hydraulic parts during all phases of manufacturing and assembly.
3. The hoses, cylinders, and valves must be as thoroughly cleaned to prevent contamination.
4. At the time of installation be certain all fittings, hoses, hose ends, and ports are clean and clear of dirt. All fittings and hose openings should be closed or covered until time of installation.
5. Make sure the reservoir is at the correct level with Dexron III.
6. Squirt clean oil into the pressure port of the pump before making the connection to the cylinder or valve.
7. Disconnect the pressure line as close to the cylinder as possible and place the end in a suitable clean container.
8. Alternately start and stop the pump until a steady stream of oil comes out of the pressure line.

ELECTRIC CONTROL POWER & GRAVITY DOWN

Step 12 Bolt the power unit to the trunnion mounting bracket using the .38" hardware provided. The eight internal tooth lockwashers are to be located so they are in contact with the pump bracket and the trunnion pump mounting bracket. Route control cord and mount the control (toggle, push button, or remote pendant) in a convenient location on the curb side. Use clips provided to support control cord every 18 inches. See figures 12 and 13 for wiring diagrams.

Step 13 Install fittings in the cylinders and the pump. The ST 31 with power down electric control are supplied with flow controls. The arrow on the flow control valve must point towards the power unit. Install hoses and hose clamps and fill the reservoir with Dexron III. Attach the ground cable to the tapped hole on the pump base labeled “GND” and the other end to the trunnion mounting bracket using the .38 hardware and internal tooth lockwashers provided. See figures 8, 9, 10 and 11 for assembly diagrams.

Step 14 Fasten the 150 AMP circuit breaker provided within 2 ft. of the truck battery. Route the battery cable from the liftgate toward the 150 AMP breaker. AVOID SHARP CORNERS AND HIGH HEAT AREAS. Use cable clips provided to secure the cable to the truck frame every 2 feet. Cut the cable to the desired length and strip .88" of insulation from the end. Slide the pre-cut heat shrink over the end of the cable. Secure the cable lug in a vise and apply heat to the connector and insert the cable as the solder melts. Allow the connector to cool and install the breaker. Install heavy ground cable from negative battery terminal to the frame. Wire the breaker to the truck battery using the 2 ft. cable provided. See figures 8, 9, 10, and 11.

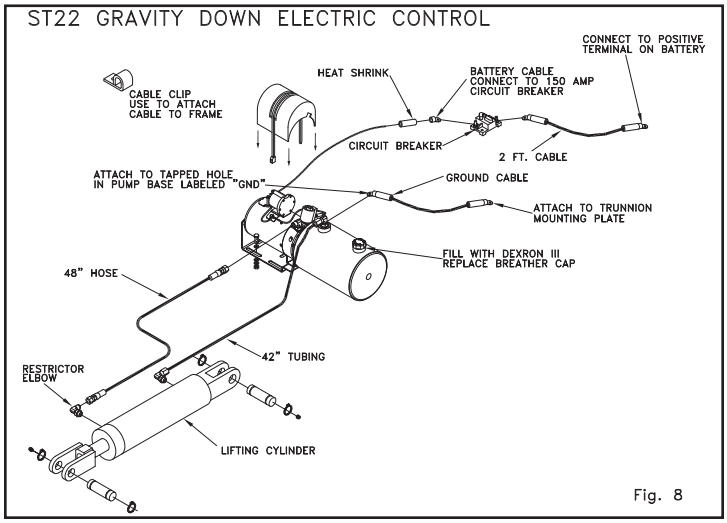

Fig. 8

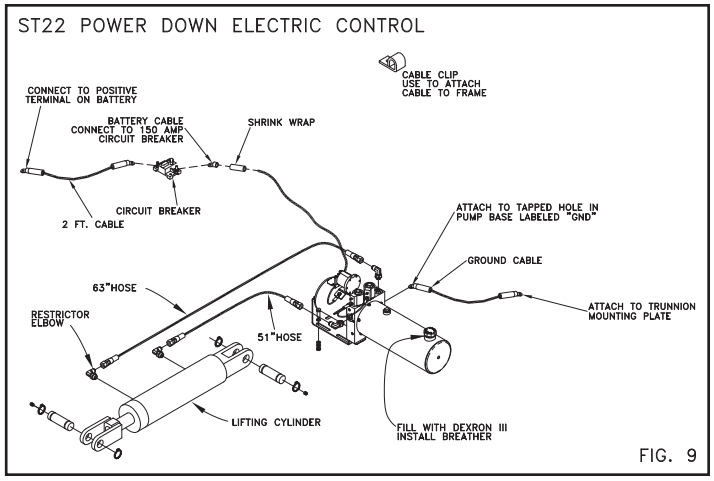

FIG. 9

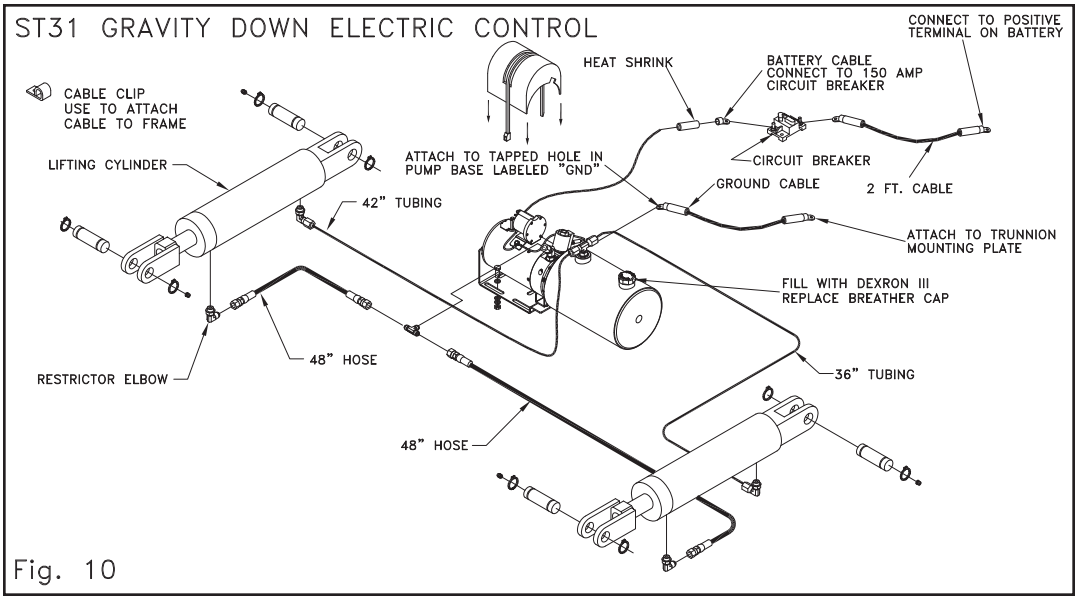

Fig. 10

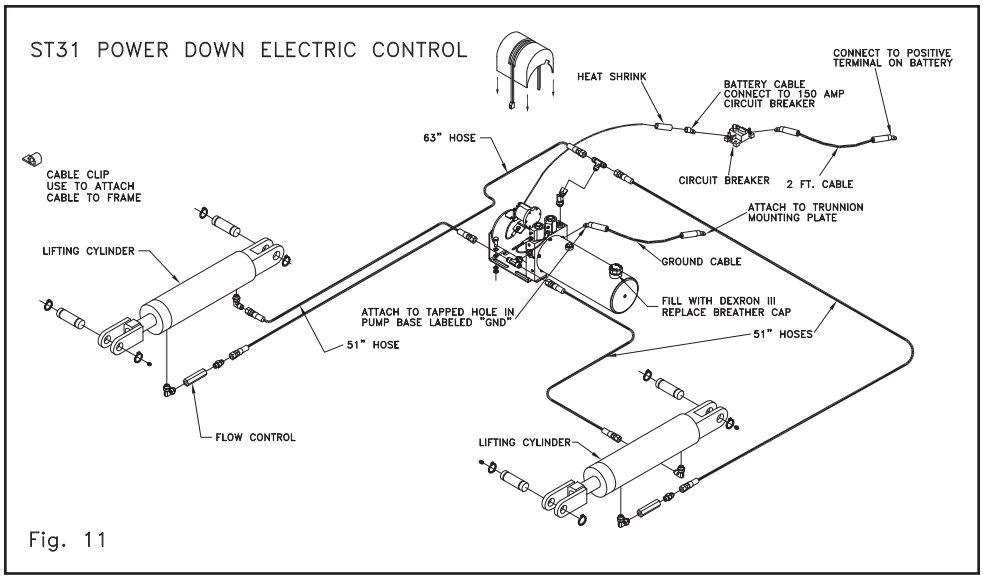

Fig. 11

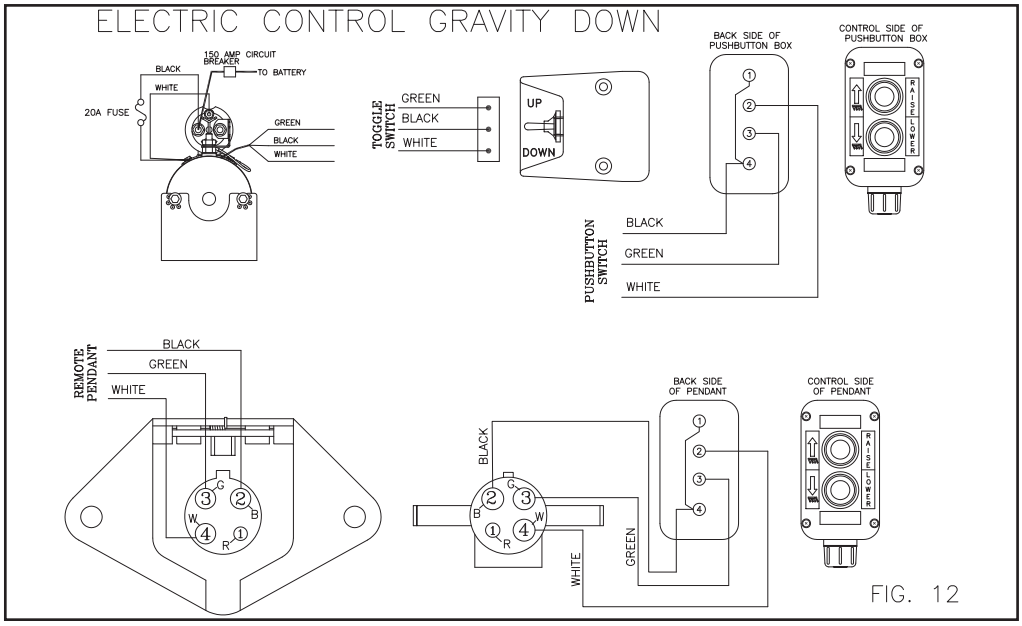

FIG. 12

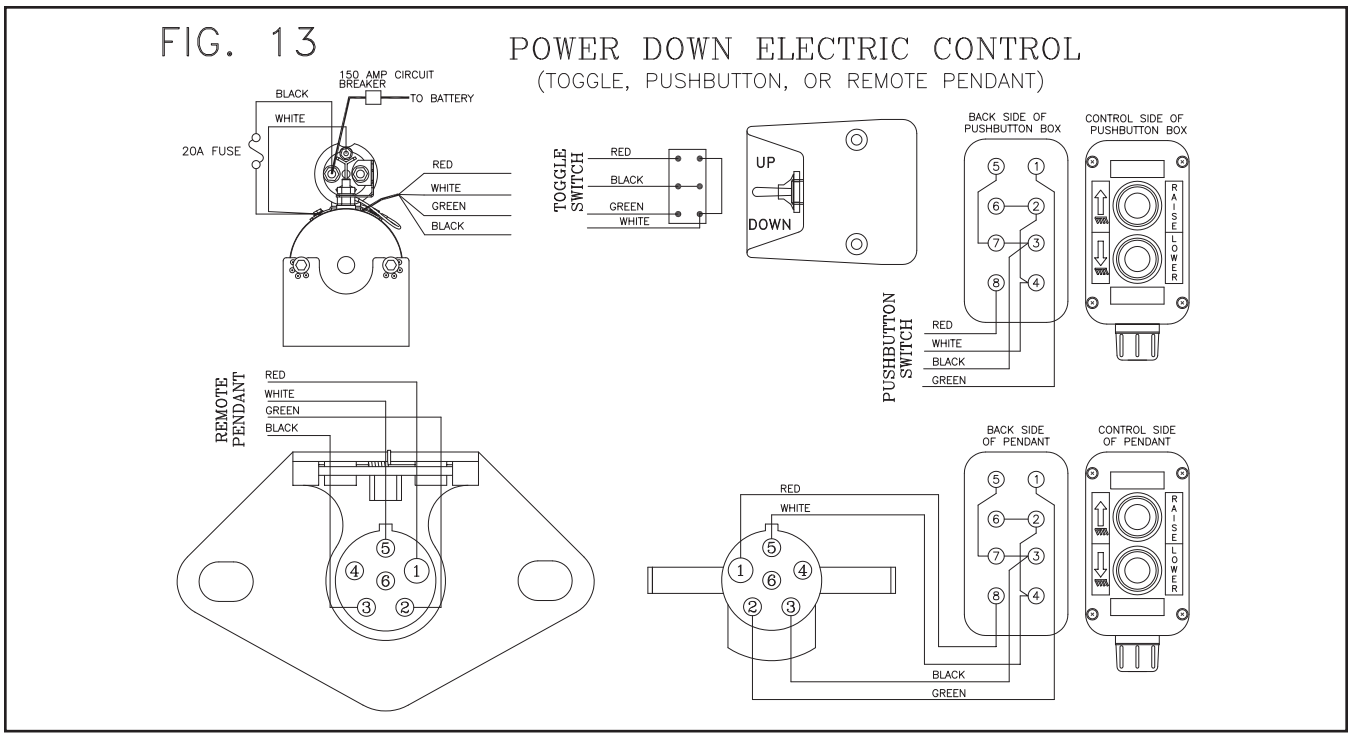

Step 15 Gate can now be operated at the power unit. Operate pump until pump bypasses.

Step 16 Many late model trucks have battery connections as shown in figure 14. The ground cable from the battery may be connected directly to the engine block with only a light braided ground strap connecting the block to the chassis. Where this is the case, the factory installed cable does not provide an adequate ground circuit for operating battery powered liftgates. We recommend that the cables labeled with an “X” be not less than #2 gauge cable as supplied in the installation kit. Also because of the high current draw (approximately 200A) we recommend that the alternator be a heavy duty type and the battery must have a 150 AMP minimum reserve capacity.

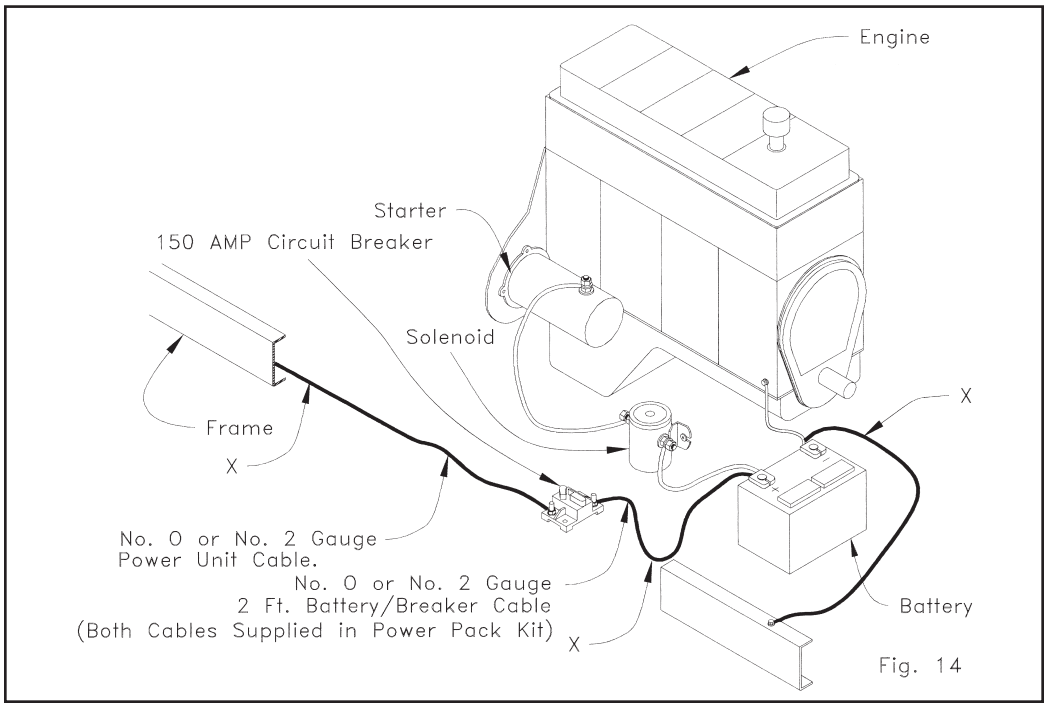

Step 17 Hold the cylinder clevis end up to the lug on the lift arm and with a 13/16" wrench turn the cylinder shaft until the holes line up. Install the pins and retaining rings. See figure 15. Check platform to determine if it is level with the truck bed. Adjust cylinder with a 13/16" wrench to reach the necessary height. After the platform has been leveled with the bed, turn the cylinder shaft into clevis one turn and tighten the set screw.

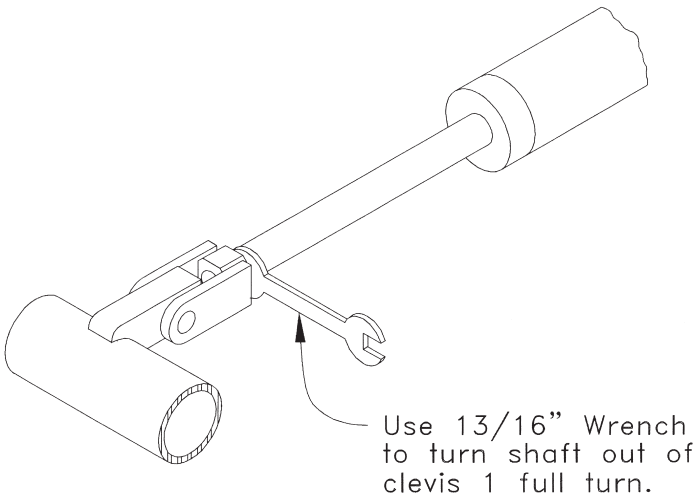

Fig. 15

Step 18 Remove protective equipment from under platform and lower liftgate to the ground.

Step 19 Remove the bolt that holds the chain for release mechanism to the idler arm. Carefully fold platform in the stowed position and check for adequate clearances. Trim where necessary.

Step 20 Lower platform to the ground and place in a vertical position. Pull chain tight so the roller makes contact with the extension. Attach chain link in this position with the .44" hardware provided. Cut off excess chain. See figure 16.

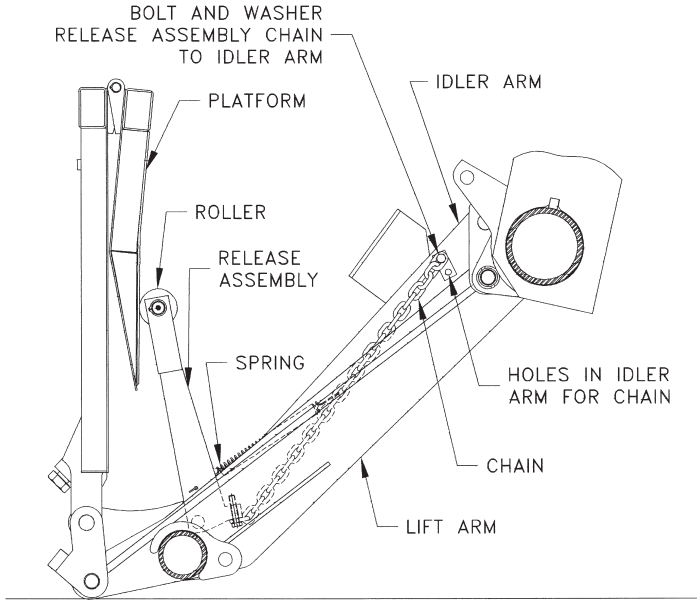

Fig. 16

Step 21 Attach the return spring provided to the hole in the release pivot on one end and a suitable chain link on the other end. Raise gate into the stowed position and check that the spring still has tension. Tighten if necessary.

Step 22 Place platform in a semi-stowed position as shown in figure 17.

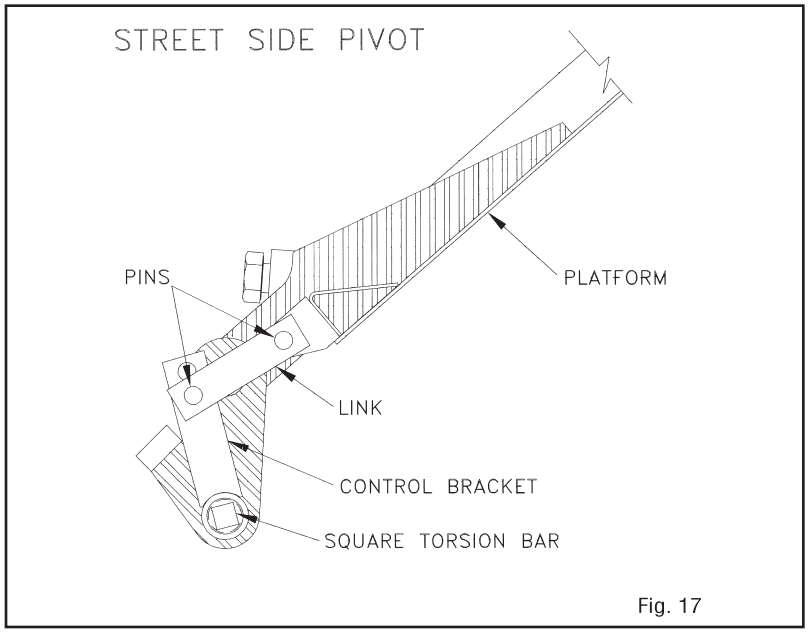

Fig. 17

Step 23 Bolt the curb side spring bracket in place. See figure 18. If holes do not line up, use a crescent wrench to twist torsion bar.

Step 24 Lower platform carefully and manually lift it back to a vertical position, noting how heavy it is. To increase or decrease the folding assist, rotate the curb side spring bracket as shown in figure 18.

Step 25 Lower the platform to the ground with a 200# weight on the platform. If the ramp tip of the platform contacts the ground before the adjusting pivot, adjust the leveling screw out so the ramp tip and the pivot strike the ground at the same time. See figure 19.

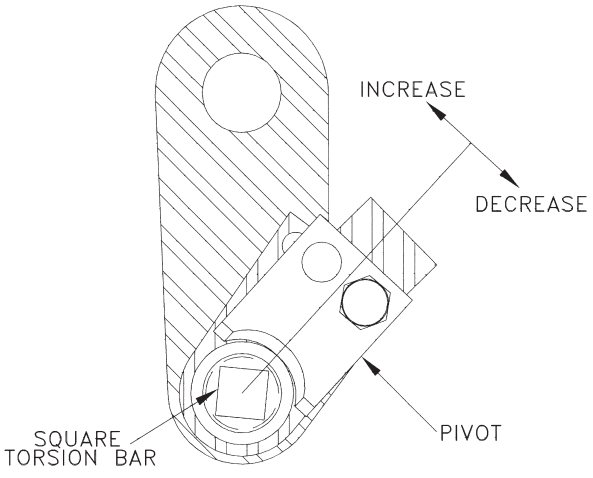

Fig. 18

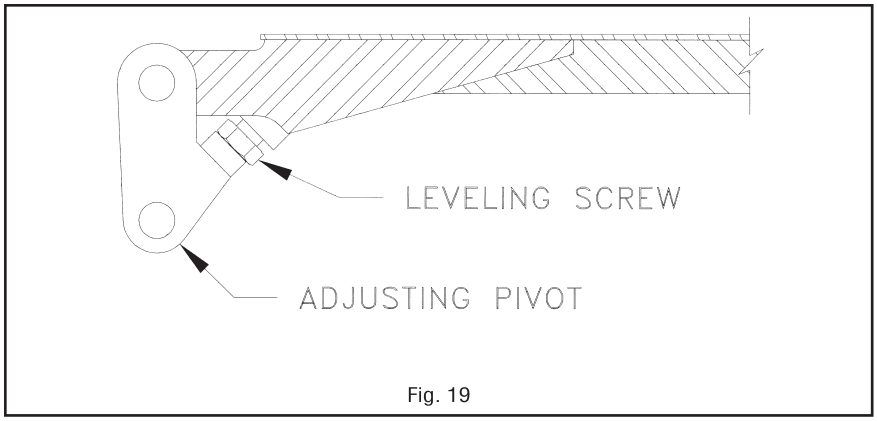

Fig. 19

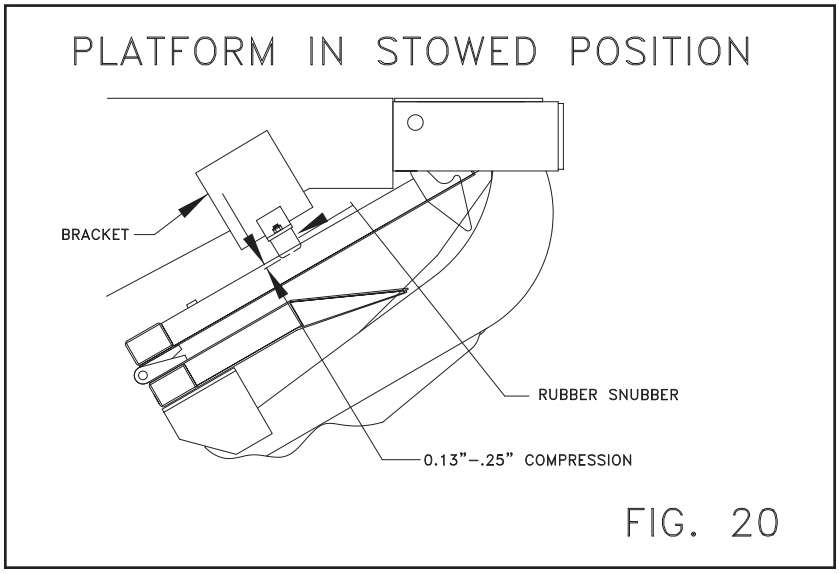

Step 26 The ST22/31 comes with a standard snubber kit to prevent excessive wear during transport. See figure 20 for mounting instructions.

Step 27 Install grease fittings and grease adequately. Oil all other moving parts. Review the entire installation with the power source disconnected. With the power connected again, check for possible interference of all moving parts. If interference occurs, review the instructions and contact Thieman if the problem can not be eliminated.

Step 28 Thieman recommends that the installer perform a weight test of the liftgate to check the welds or mounting bolts and the structural integrity of the body or frame of the truck or trailer. The load used should be the maximum weight rating of the particular liftgate with the weight centrally located on the platform. A minimum of 20 cycles should be made to insure the integrity of the mounting.

Step 29 Finish paint as required and remove the pre-mask on the decals already applied by Thieman and apply the remaining decals in the appropriate locations as shown below. When painting, carefully grease or mask fittings and exposed portion of the piston rod. The decals MUST be applied and this liftgate MUST be painted or all warranties are VOID!

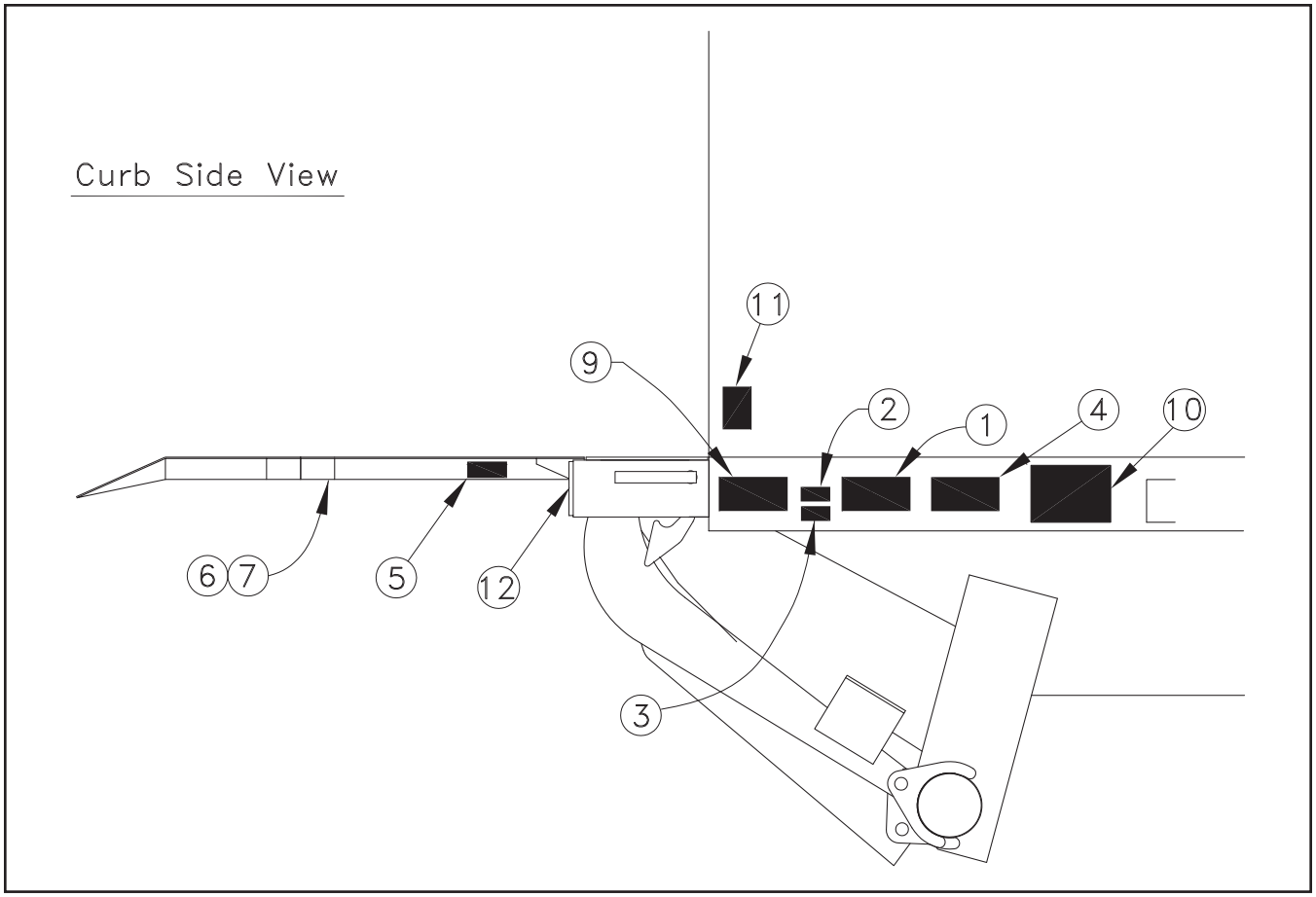

Item	Part Name	Part Number
1	Warning Decal-off center	4671050
2	Fast Idle Decal	4650150
2	PTO Decal	4650140
3	Danger Decal-no riding	4609
4	Operating Decal-Toggle	4606
5	Capacity Decal-2200#	4650540
5	Capacity Decal-3100#	4650740
6	Warning Decal-pinch point	4604
7	Handle decal	4605
8	Thieman Nameplate	4650800
9	Urgent Warning Decal	4650530
10	Wiring Decal - Gravity Down	4612
10	Wiring Decal - Power Down	4614
11	Warning Decal	4620
12	Reflector (3)	5705

Step 30 Any lights that were removed or obstructed must be replaced or relocated in such a manner that the completed vehicle must be in Compliance with FMVSS 108 (49CFR 571.108).

Step 31 It may be necessary to add Rear End Protection on this installation. Check your local & state laws for requirements of FMCSR 49 CFR 393.86.