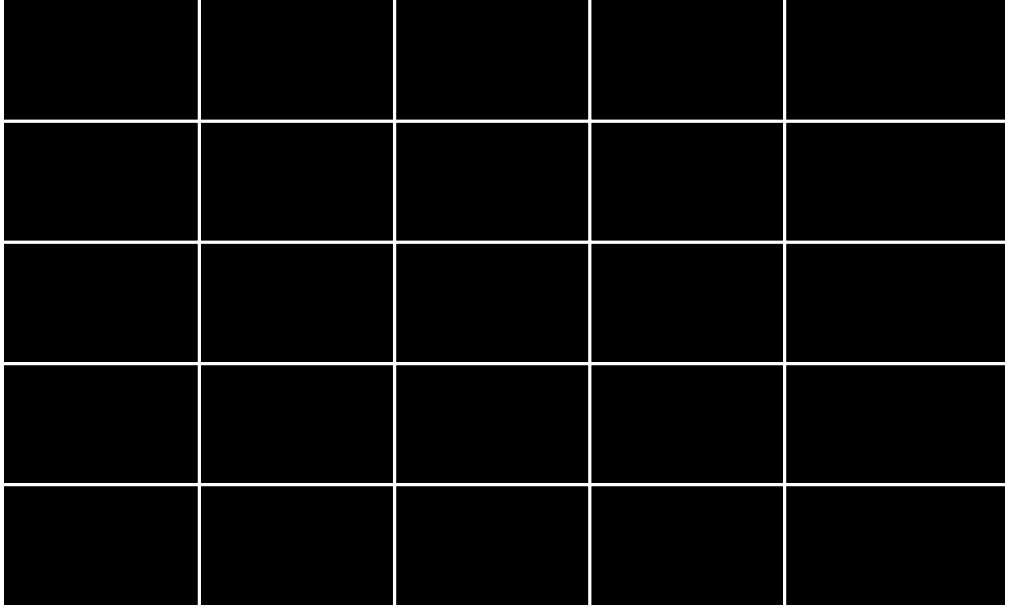

SHINDAIWA GRASS TRIMMER TO BRUSHCUTTER CONVERSION KIT FOR T344 GRASS TRIMMER

MODEL: BCK-12

WARNING!

Minimize the risk of injury to yourself and others! Read the Owner's/Operator's manual originally supplied with the unit that is being upgraded and familiarize yourself with the contents. Always wear eye and hearing protection when operating your unit.

X7672231201
06/15

shindaiwa®

Introduction

These are instructions to convert a grass trimmer to a blade capable unit. This is not an Owner's/Operator's manual. Information on how to operate and maintain the unit can be found in the Owner's/Operator's manual for the unit you are converting.

IMPORTANT!

The information contained in these instructions describes the product available at the time of publication.

Echo, Inc. reserves the right to make changes to products without prior notice, and without obligation to make alterations to units previously manufactured.

Contents

	PAGE		PAGE		PAGE
Attention Statements	2	General Safety Instructions	3	Assembly	4
Safety Labels	3	Kit Contents	3	Shoulder Strap	8
				Using a Brushcutter Blade	9

Attention Statements

Throughout this manual are special “attention statements”.

WARNING!

A statement preceded by the triangular attention symbol and the word “WARNING” contains information that should be acted upon to prevent serious bodily injury.

CAUTION!

A statement preceded by the word “CAUTION” contains information that should be acted upon to prevent mechanical damage.

IMPORTANT!

A statement preceded by the word “IMPORTANT” is one that possesses special significance.

NOTE:

A statement preceded by the word “NOTE” contains information that is handy to know and may make your job easier.

IMPORTANT!

The instructions described in this manual are intended to help you get the most from your Shindaiwa power tool as well as to protect you and others from harm. These procedures are guidelines for safe operation under most conditions, and are not intended to replace any safety rules and/or laws that may be in force in your area. If you have questions regarding your Shindaiwa power tool, or if you do not understand something in these instructions, your Shindaiwa dealer will be glad to assist you. You may also contact Shindaiwa at the address printed on the back of this instructional manual.



Read and follow this operators manual. Failure to do so could result in serious injury.



Wear eye and hearing protection at all times during the operation of this unit.



Keep bystanders at least 50 feet (15 m) away during operation.



Beware of thrown or ricocheted objects.

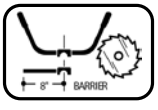

Do not operate this unit with a blade unless the unit is equipped with a Shindaiwa-approved handlebar or barrier.

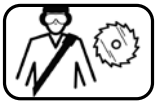

Always wear a harness when operating this unit with a blade. A harness is also recommended when using trimmer line.



If unit is used as a brushcutter, beware of blade thrust. A jammed blade can cause the unit to jerk suddenly and may cause the operator to lose control of the unit.

Safety Labels



IMPORTANT!

Safety and Operation Information Labels: Make sure all information labels are undamaged and readable. Immediately replace damaged or missing information labels. A new label is provided in this kit and additional labels are available from your local authorized Shindaiwa dealer. Prior to installing the new label, Remove old label and clean the outer tube with rubbing alcohol or similar cleaner.

General Safety Instructions

WARNING!

- When operating with a blade, make sure the handle is positioned to provide you with maximum protection from contacting the blade. Always make sure the handlebar is installed in accordance with the manufacturers instruction.
- **NEVER** use a cracked or warped blade: If a properly installed blade vibrates, replace it with a new one and re-check.
- **ALWAYS** Shut off the engine immediately if a blade binds in a cut. Push the branch or tree to ease the bind and free the blade.
- Beware of a coasting blade when brushcutting. A coasting blade can injure while it continues to spin after the throttle trigger is released or after the engine is stopped.

Kit Contents

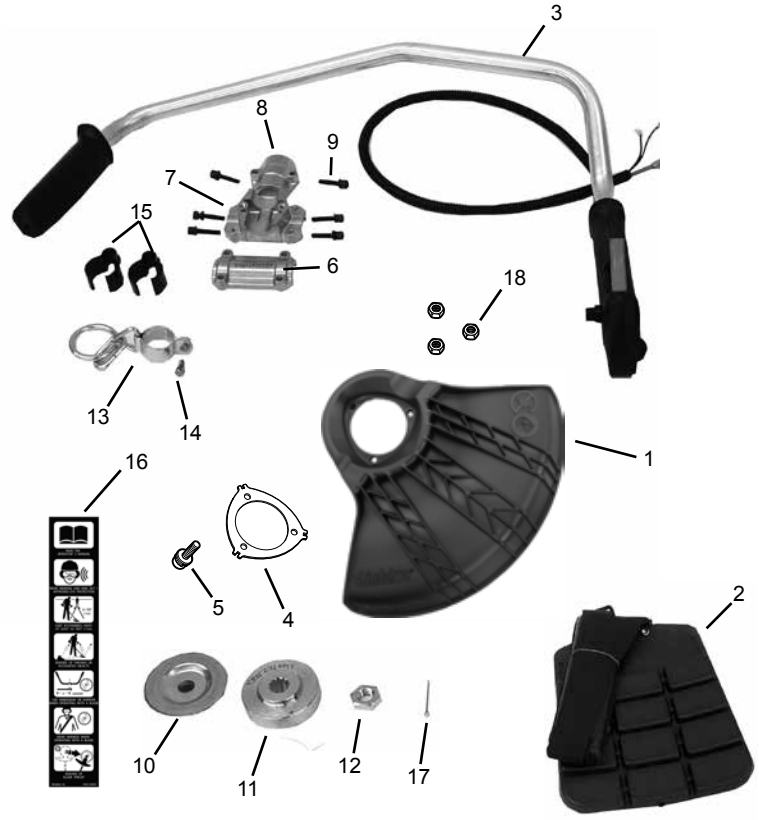

#	Description	Qty
1.	Wide Plastic Shield	1
2.	Shoulder strap w/hip pad	1
3.	Handlebar assembly	1
4.	Shield plate	1
5.	5 x 25 mm screws	3
6.	Upper handlebar cap	1
7.	Handlebar mounting bracket	1
8.	Lower handlebar cap	1
9.	5 x 25 mm hex socket head bolts	6
10.	Lower plate	1
11.	Adapter plate	1
12	10mm LH nut	1
13.	Harness hanger assembly	1
14.	5 x 12 mm screw	1
15.	Throttle cable clips	2
16.	Caution label	1
17.	Split pin	1
18.	5 mm lock nut	3
	Assembly Tool (s)	

Assembly

Install Plastic Blade Shield

Parts Required: Wide Plastic Shield, Shield Plate,
3 - 5 x 25 mm screws (plastic shield to gear case).
3 - 5 mm lock nuts

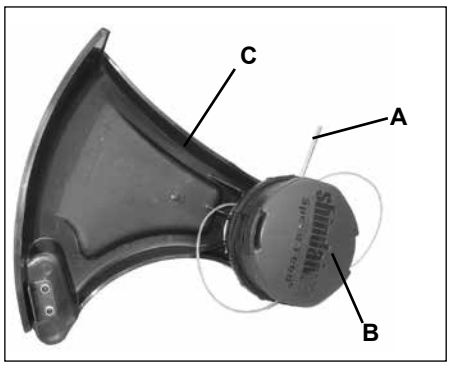

1. If installed, remove nylon line head, adapter plate, shield plate, and plastic shield:
   a. Align locking hole in adapter plate with notch in edge of gear case and insert locking tool (A).
   b. Remove line head (B) by turning it clockwise until head is completely off of shaft.
   c. Remove locking tool.
   d. Remove three screws holding shield plate (E) and plastic shield (C) to gear case.
   e. Retain all parts for conversion back to nylon line head operation.

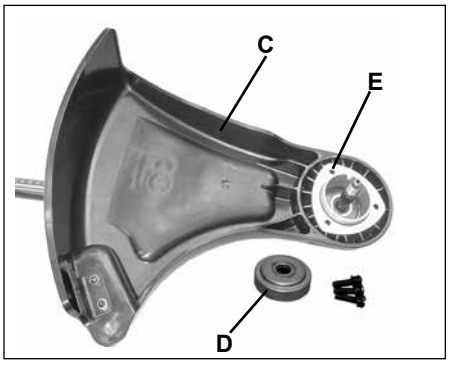

2. Align plastic blade shield (C) with the drive shaft, and install on the bottom of the gear case flange.

3. Place shield plate (D) on shield and align holes. Install (3) screws (E) and (3) locknuts (F).

4. Tighten all shield hardware.

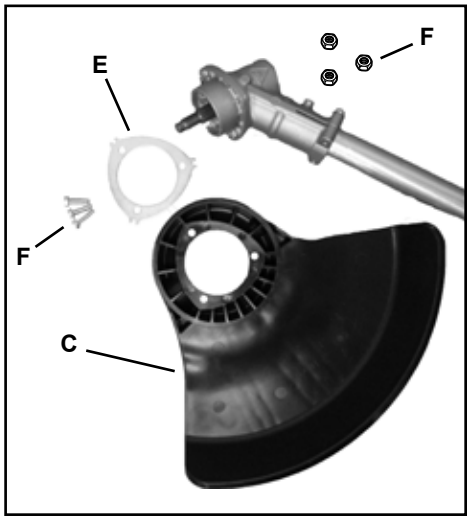

WARNING!

NEVER operate the unit without the cutting attachment shield installed and tightly secured!

WARNING!

A cutting attachment shield or other protective device is no guarantee of protection against ricochet. YOU MUST ALWAYS GUARD AGAINST FLYING DEBRIS!

Remove Handle Assembly

1. Remove handle assembly. Retain all parts for future use.

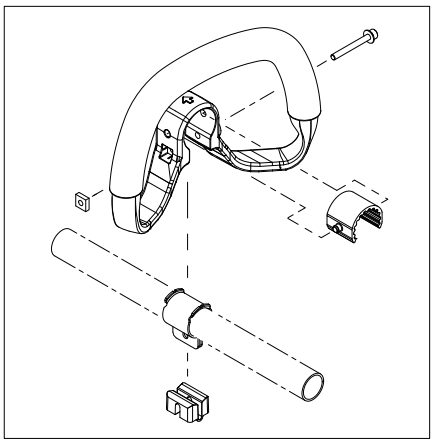

Disconnect Throttle Cable-Ignition Wires

1. Loosen air cleaner cover knobs and remove air cleaner cover.
2. Remove wire end of throttle linkage cable (I) from carburetor throttle swivel hole.
3. Disconnect 2 ignition stop switch leads (J):
4. Unscrew throttle linkage cable with attached cable adjustment fixture and nut (K) from carburetor throttle cable bracket (L).

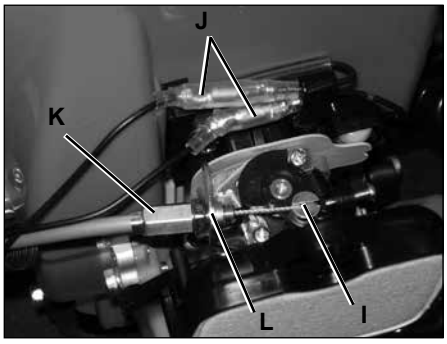

Remove Power Head

1. Loosen drive shaft clamping bolts (M).
2. Pull outer tube and drive shaft out of power head.

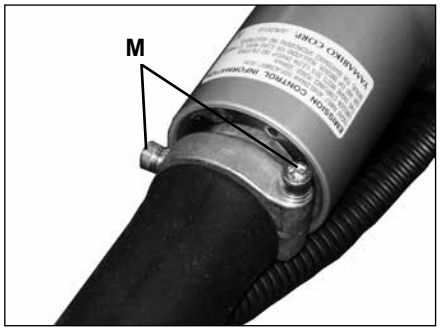

Remove Throttle Control Handle Assembly

1. Loosen handle clamp screw (N), and remove throttle control assembly and cushioned hand grip (O) from outer drive shaft tube.

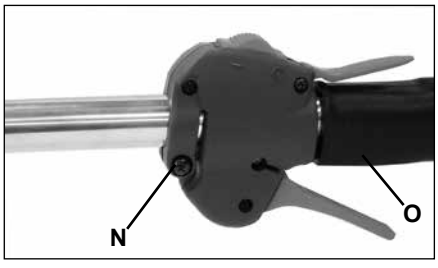

Install Harness Hanger

1. Remove handle shim (P).
2. Slide harness hanger (Q) on to outer drive shaft tube (R) and loosely attach with 5 mm x 12 mm screw.

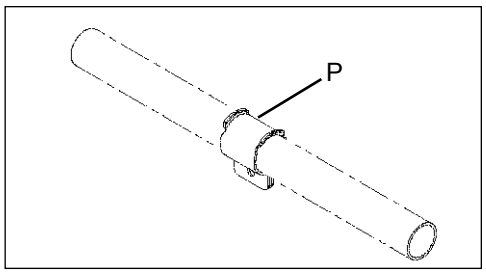

Install Power Head

1. Slide outer drive shaft assembly into power head clamp, and align power head with gear case.
2. Secure drive shaft assembly with clamping bolt.

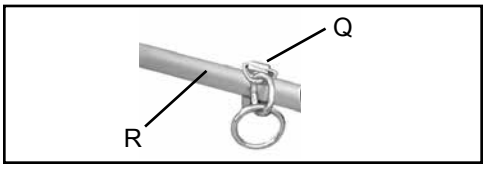

Install Handlebar Bracket and Handlebar

1. Install lower handlebar cap (S) and handle bar mounting bracket (T) on outer drive shaft tube (U) using (2) 5 mm x 25 mm socket head cap screws. Do not tighten screws securely until final adjustments are completed.
2. Place handle bar (V) in mounting bracket, and secure with upper handlebar cap (W) and (4) 5 mm x 25 mm socket head cap screws. Do not tighten screws securely until final adjustments are completed.

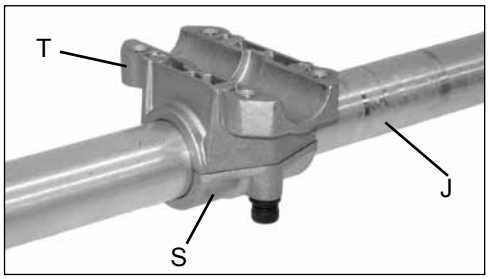

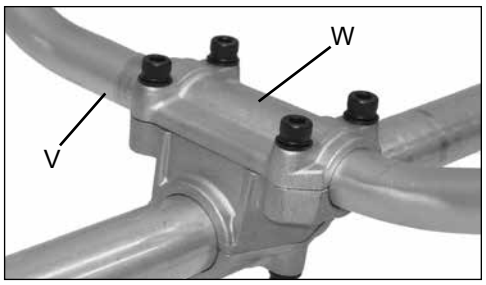

Throttle Linkage and Ignition Leads

1. Thread throttle cable adjuster (K) into throttle cable bracket (L), and install wire end into large carburetor swivel hole (I). Check throttle for freedom of movement and that wide open throttle/low idle extremes are adjusted properly. Turn the cable adjuster in or out to make adjustments. After adjusting, hold the cable adjuster (K), and tighten the cable adjuster nut (CC) against the cable bracket (L) to lock the setting.
2. Connect 2 ignition stop leads from throttle cable tubing to ignition leads on engine (J).
3. Reinstall the air cleaner cover.
4. Route throttle linkage and ignition lead assembly behind handle bracket and clip to drive shaft.

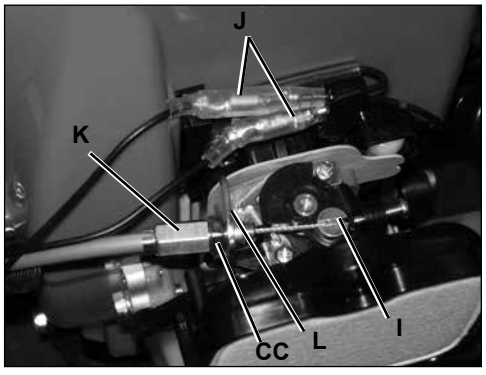

Install Blade

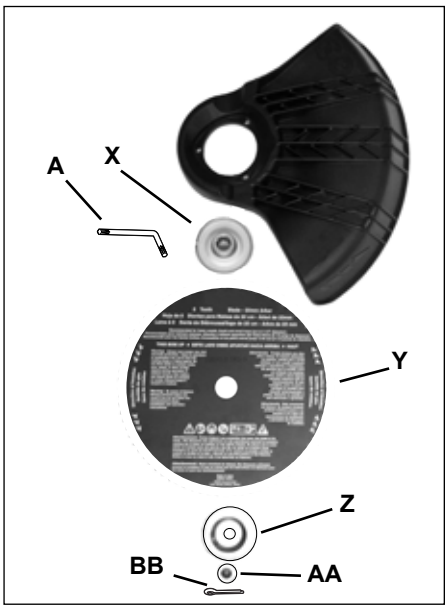

Parts Required: Adapter plate w/25 mm diameter pilot, lower blade mounting plate, 10 mm hex nut w/L.H. thread, 2 mm x 25 mm cotter pin, blade w/25 mm arbor diameter.

1. Install adapter plate (X) on splined PTO shaft, pilot side down. Blade installation requires Adapter Plate (X) with 25 mm pilot.
2. Install Blade (Y) on adapter plate pilot. Blades must be installed so that rotation arrow on blade matches rotation of unit: teeth toward direction of rotation (See debris shield decal). Secure blade with Lower Plate (Z), and 10 mm L.H. nut (AA). Turn nut counter-clockwise on PTO shaft to tighten.
3. Align hole in adapter plate with notch in gear case, and insert Locking Tool (A) to prevent splined shaft from turning. Arrow on gear case points to notch. Tighten 10 mm nut securely.
4. Insert Cotter Pin (BB) in hole in PTO shaft, and bend pin legs around shaft counterclockwise to retain 10 mm nut.

IMPORTANT!

Never reuse a cotter pin - install a new cotter pin each time a blade is installed or replaced.

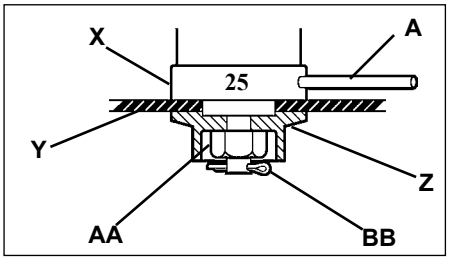

5. Remove locking tool.

The unit should now be completely assembled and ready for use with a blade.

IMPORTANT!

Units with adjustable carburetors must be readjusted for blade use, otherwise serious engine damage can occur.

IMPORTANT!

Discard blades that are bent, warped, cracked, broken or damaged in any way. Use a sharp blade. A dull blade is more likely to snag and thrust.

WARNING!

A standard grass trimmer unit with loop handle should NEVER be operated with blade-type attachments. For blade use, the trimmer must be fitted with a bicycle-type handlebar or barrier bar that is located in front of the operator to reduce the risk of the operator coming in contact with the cutting attachment. (Per ANSI B175.3). When using a blade, the unit must be equipped with a harness or strap.

Shoulder Strap

Adjust the shoulder strap so the shoulder pad rests comfortably on the off-side shoulder and the cutting path of the cutting attachment is parallel to the ground. Tighten hanger screw.



WARNING!

Always wear a shoulder strap when operating this unit with a blade. A shoulder strap is also recommended when using trimmer line.

NOTE:

Using a shoulder strap with a brush-cutter allows you to maintain proper control of the unit and reduces fatigue during extended operation.

BALANCE AND ADJUST UNIT



1. Loosen harness clamp screw.
2. Put on harness and attach unit to harness.
3. Slide harness clamp up or down until unit balances with head approximately 50-75 mm (2 -3 in.) from the ground.
4. Tighten harness clamp screw.
5. Loosen Handle bar clamp screws, and position Handle bar for comfortable operation.
6. Tighten Handle bar clamp screws securely.

Using A Brushcutter Blade

WARNING!

- Before working with a blade-equipped unit, always inspect and clean the area of objects that could interfere with or damage the blade.
- Never use a blade near sidewalks, fence posts, buildings or other objects that could cause injury or damage.
- Never use a blade for purposes other than those for which it was designed.
- Whenever you strike a hard object with a blade, always stop the brushcutter and carefully inspect the blade for damage. NEVER OPERATE THE UNIT WITH A DAMAGED BLADE!
- A blade-equipped unit **must** be equipped with a bicycle-type handlebar or barrier as well as a harness or strap.
- Always make sure the cutting attachment shield is properly installed before operating the unit.

Blade Thrust
'Blade thrust' is a sudden sideways or backward motion of the brushcutter. Such motion may occur when the blade jams or catches on an object such as a sapling tree or tree stump. BE CONSTANTLY ALERT FOR BLADE THRUST AND GUARD AGAINST ITS EFFECTS!

Handle Bar
A brushcutter's handle bar helps prevent the operator from moving forward, or the unit moving rearward, thus preventing inadvertent bodily contact with the blade. ALWAYS KEEP THE HANDLE BAR SECURELY IN PLACE ON THE UNIT!

Shoulder Strap or Harness
A shoulder strap or harness provides additional protection against blade thrust. In addition, a shoulder strap or harness gives significant support and comfort to help ensure safe and efficient operation.
When operating a unit equipped with a blade, make sure both the handle/barrier bar and shoulder strap or harness are adjusted to the size of the operator using the unit.

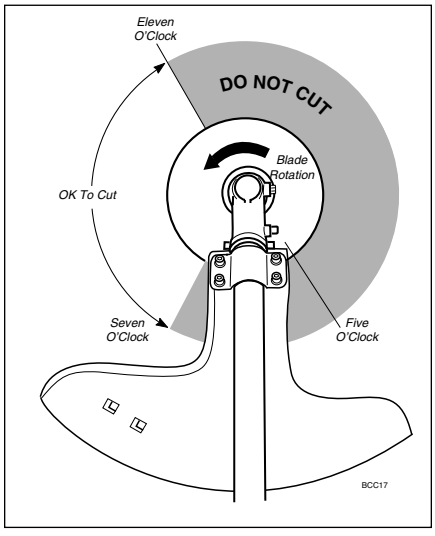

The blade rotates counter-clockwise. For best performance and to minimize being struck by debris, move the blade from right to left while advancing on your work.
Position the blade so cuts are made between the blade's 7 o'clock and 11 o'clock positions (as viewed from above). DO NOT cut between the 11 o'clock and 5 o'clock positions (shaded area).

NOTES

NOTES

Consumer Product Support
If you require assistance or have questions concerning the application, operation or maintenance of this product you may call the Shindaiwa Consumer Product Support Department at 1-877-986-7783 from 8:30 am to 4:30 pm (Central Standard Time) Monday through Friday. Before calling, please know the model and serial number of your unit.

shindaiwa®

ECHO Incorporated.
400 Oakwood Road
Lake Zurich, IL 60047-1564 U.S.A.
Telephone: 1-877-986-7783
Fax: 1-847-540-8416
www.shindaiwa.com

Yamabiko Corporation
7-2 Suehirocho 1-Chome, Ohme,
Tokyo, 198-8760, Japan
Phone: 81-428-32-6118
Fax: 81-428-32-6145

Copyright© 2015 By Echo, Incorporated
All Rights Reserved.