

Tri-MEC

LS Medium Voltage Vacuum Contactors

Tri-MEC VC



Vacuum Contactors





Customer satisfaction through quality and service-LS medium voltage vacuum contactors

LS medium voltage vacuum contactors using LS vacuum interrupters manufactured with worldclass technology are type tested in LS PT & T that is accredited high power test lab by worldclass KOLAS.





Contents :

Features 4
Technical data 8
Ordering information 10
External view 12
Safety components 13
Internal structure 14
Vacuum interrupters 15
Accessories 16
Drawing operations 17

Electrical circuit diagram 18
Internal connection diagrams 20
Connection diagrams 22
External dimensions 24
Selection tables 28
Power fuse 30
Power fuse selection guides 31
Coordination graph 32
Operation curves 34



LS Vacuum Contactors

We have the major technology that others can not catch up.
LS vacuum contactors provide high withstand-current strength and switching capacity as well as versatile auxiliary functions.



Fixed type

Drawout type (Standard type)

General description



LS Tri-MEC vacuum contactors are mainly used for the switching of motors, transformers, capacitors in AC power lines. They can be installed in multi-stack cubicles.

A vacuum contactor comprises several assemblies such as switching mechanism including vacuum interrupters, magnetic actuator, high strength molded front cover and auxiliary devices. Stable and high operating cycle is executed by the vacuum interrupters made of high alumina ceramic tube which makes it possible to degas in a high temperature with excellent mechanical strength.

Actuating is available either at instantaneous or continuous excitation. Functions for safety in connecting and disconnecting are also provided.



E–Class Cradle



F_2–Class Cradle



G–Class Cradle



Direct-drawout type - for MCSG



Fuse connectable type (Standard type)



Fuse connectable type (Direct-drawout type)

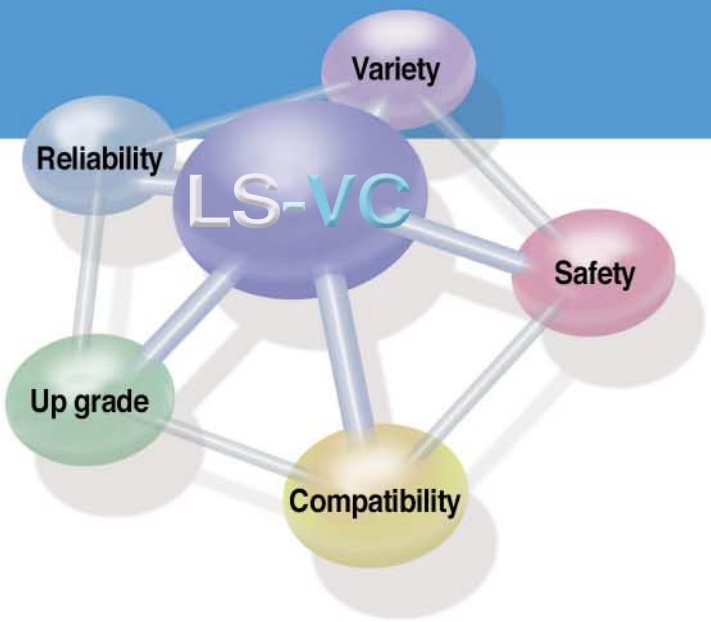

Operation conditions

Ambient temperature : -5 to 40˚C
Maximum temperature of 24-hour mean : 35 ˚C
Altitude : 1000m
Humidity : 24-hour measured average - max. 95% RH
1 month measured average - max. 90% RH

Applied standards

IEC Pub. 60470, IEC 60282-1, JEM 1167, KEMC 1126

Vacuum Contactors

Up-graded performance

Rated short-time current 6.3kA

[6.3kA]

Performance is up-graded to rated short-time current 6.3kA/1sec. and switching capacity 4kA according to IEC60470.


R32-0768

한국시험성적서


KERI

개발시험성적서

합격

한국전기연구원장

Short-circuit protection

[40kA]

Power fused type vacuum contactors, in-house tested according to IEC 60282-1, can provide short-circuit protection up to 40kA.

High performance, high reliability and long service life

LS vacuum interrupters that comply with IEC, ANSI and NEMA standards are manufactured by the process of brazing and degasing together in a high vacuum furnace to assure high reliability.

Superior mechanical strength and degasing

Providing long service life and suited for frequently operating purpose due to using high alumina ceramic tube and degasing in a high temperature.

High speed interruption and short arcing time

It has fast recovering characteristic of vacuum insulation. When opening it breaks the current at the first current-zero point to minimize the wearing of contacts.

Reliable interruption of fault current

LS current limiting power fuse can protect the devices and systems from fault current by interrupting within half cycle.
High current such as short-circuit current cause a fuse blown out due to the reaction on the material inside of a fuse within such a short time.

Applied standards

IEC 282-1, DIN 43625, BS 2692, KSC 4612

[Safety]

LS Tri-MEC vacuum contactors provide several auxiliary functions for safe and comfortable use.





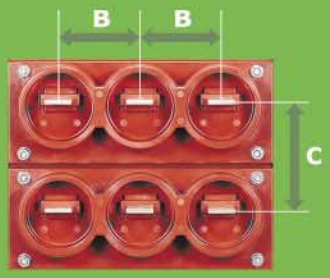

- Interlock button
- Drawout cradle for MCSG
- One-molded fuse holder
- Fuse checher and micro switch
- Unification bushing
- Mechanical interlock type

Additional equipment

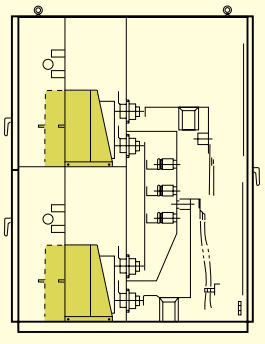

Contactor over contactor arrangement

Suitable for Metal Clad Switchgear

The structure of G type cradle unification bushings and single-molded fuse-holder barrier enables vacuum contactors to build Metal Clad Switchgears.

Directly withdrawable equipment

This enables the withdrawing of a vacuum contactor from a panel without opening a door to prevent any possibility of electric shock.

Interlock

For the safety of a operator interlock is equipped as standard.

Auxiliary contacts

Available up to 5NO+5NC.

Vacuum Contactors

Technical data





Type			Fixed (Z) type				Drawout (D) type				Direct-drawout (DB) type - for MCSG			
			LVC-3Z -42□D	LVC-6Z -42□D	LVC-3Z -44□D	LVC-6Z -44□D	LVC-3D -42□D	LVC-6D -42□D	LVC-3D -44□D	LVC-6D -44□D	LVC-3DB -42□D	LVC-6DB -42□D	LVC-3DB -44□D	LVC-6DB -44□D
Rated operation voltage		[kV]	3.3	6.6	3.3	6.6	3.3	6.6	3.3	6.6	3.3	6.6	3.3	6.6
Rated voltage		Ur[kV]	3.6	7.2	3.6	7.2	3.6	7.2	3.6	7.2	3.6	7.2	3.6	7.2
Rated operational current		Ie[A]	200		400		200		400		200		400	
Rated frequency		fr[Hz]	50/60											
Rated breaking current		(kA, O-3min-CO-2min-CO)	4											
Rated short-time current		(kA-sec)	2.4kA-30s, 4kA-10s, 6kA-2s, 6.3kA-1s, 8kA-0.5s, 10kA-0.1s											
Rated short-time peak current		(kApeak- 0.5Cycle)	60											
Switching frequency(AC3)		[op./hr]	E : Continuous 1200, L : Instantaneous 300											
Lifetime	Mechanical	[×10,000operations]	E : Continuous 300, L : Instantaneous 50											
	Electrical	[×10,000operations]	30											
Impulse withstand		Up[kVp]	60											
Dielectric strength		Ud[kV/1min]	20											
Excitation method			E : Continuous, L : Instantaneous											
Control voltage		[V]	AC 110V, AC 220V, DC 110V											
Auxiliary contact	Arrangement		Continuous 3a3b, Instantaneous 2a2b				2a2b				2a2b			
	Current	[A]	10 (AC)											
	Voltage	[V]	600max ~ 48min											
Max. Applicable	Motors	[kW]	750	1,500	1,500	3,000	750	1,500	1,500	3,000	750	1,500	1,500	3,000
	Transformers	[kVA]	1,000	2,000	2,000	4,000	1,000	2,000	2,000	4,000	1,000	2,000	2,000	4,000
	Capacitors	[kVA]	750	1,500	1,200	2,000	750	1,500	1,200	2,000	750	1,500	1,200	2,000
Weight		[kg]	24				41				56			

Note) 6a6b is available for Fixed/Ordinary operating type

Power fuse

Power fuses can be installed into combination(G, GB) type contactors for the protection of equipments and systems from short-circuit.
Fuse ratings are selected properly after system analysis and some accessories such as fuse link clips should be selected by the fuse rating.







Type			Combination drawout (G) type				Combination direct-drawout (GB) type - for MCSG			
			LVC-3G -42□D	LVC-6G -42□D	LVC-3G -44□D	LVC-6G -44□D	LVC-3GB -42□D	LVC-6GB -42□D	LVC-3GB -44□D	LVC-6GB -44□D
Rated operation voltage		[kV]	3.3	6.6	3.3	6.6	3.3	6.6	3.3	6.6
Rated voltage		Ur[kV]	3.6	7.2	3.6	7.2	3.6	7.2	3.6	7.2
Rated operational current		Ie[A]	200		400		200		400	
Rated frequency		fr[Hz]	50/60							
Rated breaking current		(kA, O-3min-CO-2min-CO)	4 kA (40kA with fuse)							
PF Combination Rated breaking current		Making	40kA							
		Breaking	40kA							
		take over(O-3min-O-3min-O)	4kA							
Rated short-time current		(kA-sec)	2.4kA-30s, 4kA-10s, 6kA-2s, 6.3kA-1s, 8kA-0.5s, 10kA-0.1s							
Rated short-time peak current		(kApeak- 0.5Cycle)	60							
Switching frequency(AC3)		[op./hr]	E : Continuous 1200, L : Instantaneous 300							
Lifetime	Mechanical	[×10,000operations]	E : Continuous 300, L : Instantaneous 50							
	Electrical	[×10,000operations]	30							
Impulse withstand		Up[kVp]	60							
Dielectric strength		Ud[kV/1min]	20							
Excitation method			E : Continuous, L : Instantaneous							
Control voltage		[V]	AC 110V, AC 220V, DC 110V							
Auxiliary contact	Arrangement		2a2b							
	Current	[A]	10 (AC)							
	Voltage	[V]	600max ~ 48min							
Weight		[kg]	46				62			

Note) Load capacity is different from ratings of Power Fuse

Power fuse ratings combination type

Standard		Type	Rated voltage(kV)	Rated current(A)	Diameter (mm)	Length (mm)
DIN type		LFL-3/6G-□B	3.6/7.2	5, 10, 20, 30, 40, 50, 63, 75, 100	45	192
		LFL-3/6G-□B	3.6/7.2	125 Note1)		292
		LFL-3G-□B	3.6	160, 200		292
		LFL-6G-□B	7.2	160, 200		292
KS type	General use	LFL-3/6G-□	3.6/7.2	5(T1.5), 10(T3), 20(T7.5), 30(T15), 40(T20), 50(T30), 60(T30)	50	261
				75(T50), 100(T75)	60	311
		LFL-3G-□	3.6	150(T100), 200(T150)	60	311
				300(T250), 400(T300)	77	311
		LFL-6G-□	7.2	150(T100), 200(T150)	77	311
	For motors	LFL-3M-□	3.6	M20, M50, M100	60	200
				M150, M200	77	200
				M300(M400) Note2)	87	250
		LFL-6M-□	7.2	M20, M50	60	311
				M100, M150 ,M200	77	350
				M300(M400) Note2)	87	450

Note1) VC linkage is prohibited by using fuse checker when the fuse rated current is over 100A.
Note2) It have to be discussed with manufacturer when you applied M440.
* LFL-6G-300, 400 is not possible to combine with VC

Vacuum Contactors

Ordering information

Contactor

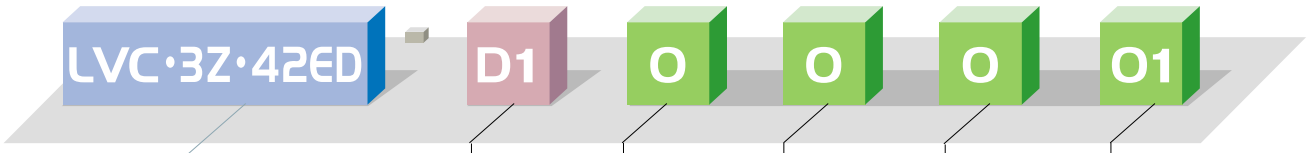

Control voltage(V)	
D1	DC 110
A1	AC 110
A2	AC 220

Fuse checker	
0	Without
1	With

PT	
0	Without PT
1	1EA of 100Var
2	2EA of 100Var
3	1EA of 200Var
4	2EA of 200Var

Position Switch	
0	Without
1	With

FUSE type		
01	LFL-3/6G-5~60	L261-ø50
02	LFL-3M-20~100	L200-ø60
03	LFL-3/6G-75~100 LFL-3G-150~200 LFL-6M-20~50	L311-ø60
04	LFL-3M-150~200	L200-ø77
05	LFL-3G-300~400 LFL-6G-150~200	L311-ø77
06	LFL-6M-100~200	L350-ø77
07	LFL-3M-300	L250-ø87
08	LFL-6M-300	L450-ø87
09	LFL-3/6G-5B~100B	L258-ø45
10	LFL-3/6G-125B~200B	L358-ø45

Contactor type



LS Vacuum Contactor

Rated voltage(kV)	
3	3.6
6	7.2

Installation	
Z	Fixed type
D	Drawout type
G	Combination drawout type (Fuse connectable)
DB	Direct-drawout type (For MCSG)
GB	Combination direct-drawout type (Fuse connectable and for MCSG)

Breaking current(kA)	
4	4

Rated current(A)	
2	200
4	400

Control method	
E	Continuous excitation
L	Instantaneous excitation

Modification No.	
D	Tri-MEC

Cradle

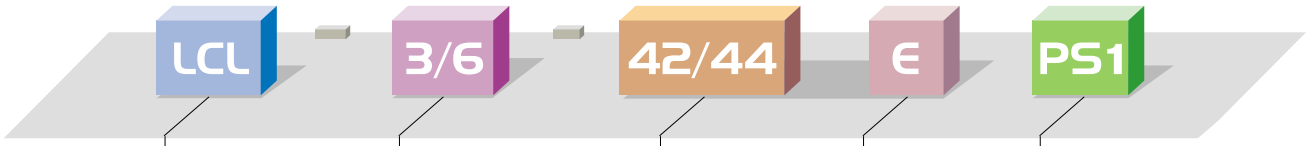

LS Cradle

Rated voltage(kV)	
3/6	3.6/ 7.2kV common

Ratings	
42 / 44	Breaking current
	4kA
	Rated current
	200/400A common

Cradle Type	
E	E class
F	F_2 class (with shutter only)
G	G class (with shutter and bushings)
B	For MCSG

Position Switch	
PS1	1a1b
PS2	2a2b

Mechanical interlock type



LS Vacuum Contactor

Mechanical Interlock

Vacuum Contactor (VC1)	
32E	LVC-3Z-42ED
34E	LVC-3Z-44ED
62E	LVC-6Z-42ED
64E	LVC-6Z-44ED
32L	LVC-3Z-42LD
34L	LVC-3Z-44LD
62L	LVC-6Z-42LD
64L	LVC-6Z-44LD

Control voltage(V)	
D1	DC 110V
A1	AC 110V
A2	AC 220V

Vacuum Contactor (VC2)	
32E	LVC-3Z-42ED
34E	LVC-3Z-44ED
62E	LVC-6Z-42ED
64E	LVC-6Z-44ED
32L	LVC-3Z-42LD
34L	LVC-3Z-44LD
62L	LVC-6Z-42LD
64L	LVC-6Z-44LD

Control voltage(V)	
D1	DC 110V
A1	AC 110V
A2	AC 220V

Vacuum Contactors

External view



1. Front cover
2. Fuse checking window
3. Connector
4. Unlock button(Interlock lever)
5. Handle(Draw-in and Drawout)
6. ON/OFF indicator
7. Operation counter
8. Manual trip button
9. Drawout carrier
10. Direct drawout carrier
11. Interlock lever
12. Interlock button
13. Hole for Interlock lever insertion
14. Test/Run indicator
15. Cradle
16. CTD(Condensor trip device)
17. Fuse case

Safety components

CTD(Condensor Trip Device)



CTD is built as standard in the contactor with AC control of instantaneous excitation so that the contactor can be tripped within 30 seconds in the event of an electricity failure. The automatic trip circuit in the event of an electricity failure is to be built by a customer.

Rating	Description	
Type	CTD-100	CTD-200
Rated input voltage(V)	AC 100/110	AC 200/220
Frequency(Hz)	50/60	50/60
Rated impulse voltage(V)	140/155	280/310
Charging time	Within 5 sec.	Within 5 sec.
Trip command possible time	Max. 30 sec.	Max. 30 sec.
Input voltage range	85%~110%	85%~110%
Capacitor rating(㎌)	400	160

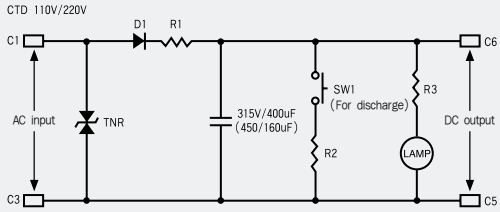

Control circuit diagram　　Terminal

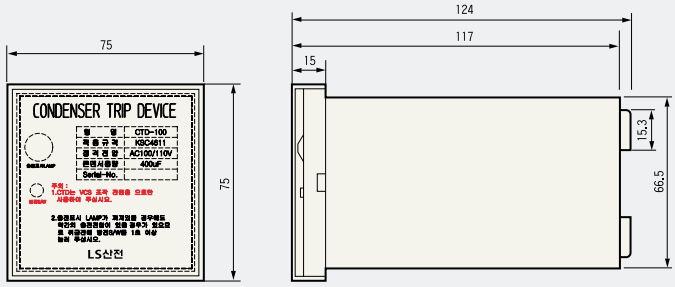

Dimensions



Fuse case

Made of high strength BMC resin to offer superior insulation and safety.

Note) Applied fuse combination type.



Counter

This is a ON/OFF operation counter by using 5 digit.



Bushing

It is mono-block bushing to be used in the cradles of G-type drawout contactors. It provides high insulation level, so recommended to use in contactors for MCSG.

Note) Applied G-Class Cradle.

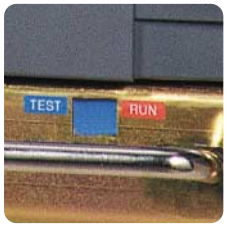

Test/Run position indicator

This enables checking contactor positions visibly when connecting or disconnecting a contactor.

Note) Applied direct drawout type only.



Direct-drawout carrier

It is a screw-sliding type drawout equipment to draw-in and draw-out a contactor directly out of a panel for personal safety. It is built in DB and GB type contactors.



ON/OFF indicator

To visiblly check whether power is supplied or not



Handle

It is a bent-lever to actuate a direct-drawout carrier by inserting and turning in DB and GB type contactors



Fuse checking window

Enables the visible check of a fuse like its outside status and temperature-rise in a fuse combination type contactor.

Internal structure

Main contact part

Consists of vacuum interrupters, main terminals and moving shunts that are supported by a one-moulded frame that maintains insulation between phases. Vacuum interrupters are operated by means of the actuating mechanism that is connected to movable parts of a vacuum interrupter with a insulation rod.

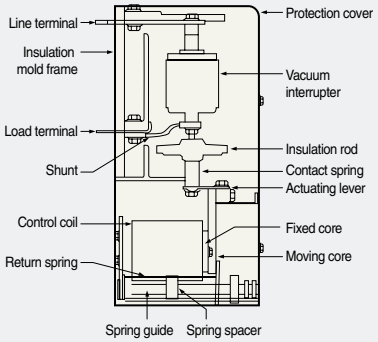

Main contact part

Actuating mechanism

Designed simply without any linkage to be suited for frequent-operation and long service life. The actuating lever connected to a moving core of a actuating magnet that carrys out the function of a actuating shaft moves up and down to control the contact pressure for stable operations.

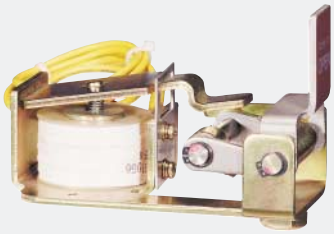

Latch mechanism

Control method

Continuous excitation - During a contactor is closed the control coil is required to be excited continuously to pull the moving core magnetically. In case of discontinuing the control power the moving core is to be returned by a spring because of the disappearance of magnetic force, which causes the opening of a contactor.

Instantaneous excitation - In this method the continuous exciting of a control coil to maintain the closing of a contactor is not required as the latch built in it holds the mechanism. In case of manual tripping, a contactor will be tripped by releasing the latch when turn on the manual trip button.



Continuous excitation



Instantaneous excitation

Type	Control method	Control voltage (V)	Closing current(A)/ time(ms)	Trip current(A)/ time(ms)	Holding current(A)/ time(ms)	Pick-up voltage	Drop-out voltage	Tripping voltage
LVC-3/6□-42/44ED	Continuous excitation(E)	DC 110	3/100	-	0.6/40	85%	75%	-
		AC 110	3/100	-	0.6/40			
		AC 220	2/100	-	0.3/40			
LVC-3/6□-42/44LD	Instantaneous excitation(L)	DC 110	4.5/145	3/35	-	85%	75%	10%~75%
	Instantaneous excitation(L) (With CTD)	AC 110	4.5(6)/145	3(4)/35	-			
		AC 220	3(4)/145	10(14)/35	-			

Note) The values in ( ) are maximum allowable currents in case of using CTD. (voltage increment considered)

Features

Vacuum interrupters

In the closed position, normal current flows through the interrupter. When a fault occur and interruption is required, the contacts are quickly separated. The are which is oriented between surfaces of contact shall diffuse at the contact structure of flat shape. It prevents local heating and damage. The arc burns in an ionized metal vapor, which condenses on the surrounding metal shield.

The arc is extinguished and vapor production is ceased at current zero. The metal vapor plasma is very rapidly dispersed, cooled, recombined, and deionized, and the metal vapor products are quickly condensed so that the contacts withstand the transient recovery voltage.



External view

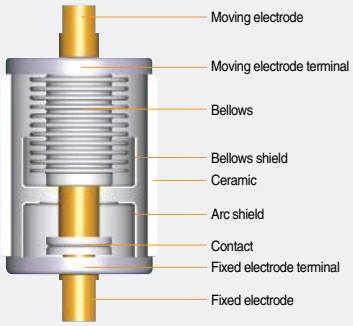

Internal structure

LS vacuum interrupters consists of spiral contact, the material of which is CuCr to provide a long service life and high withstand voltage characteristic.

Ratings

Rated voltage	(kV)	7.2
Rated current	(A)	400
Rated interrupting current	(kA)	4.5
Contact stroke	(mm)	4.75
Opening speed average	(m/s)	0.6
Closing speed average	(m/s)	0.3
Contact force	(kg)	7 Min
Moving side weight	(kg)	0.23
Interrupter weight	(kg)	0.52
Max. contact erosion	(mm)	1

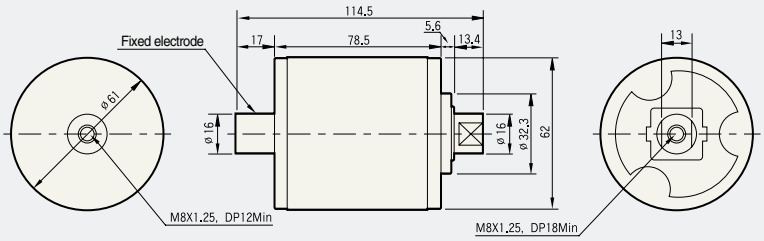

Dimensions

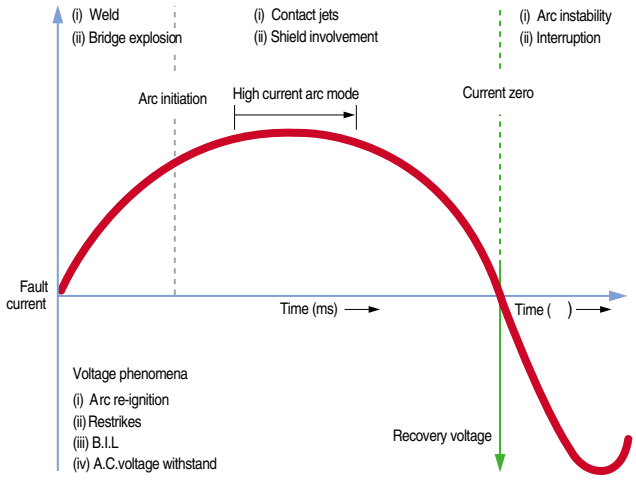

AC arcing and interruption phenomena in vacuum

Accessories

Fuse checker / Micro switch

Fuse checker is operated in case of fuse blowing and output mechanical signal at same time. A micro switch is a part of fuse checker. The mechanical input signal is changed to electrical out signal by micro switch.

Note) 19-20 : NO contact, 19-21 : NC contact

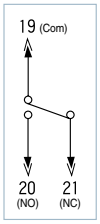

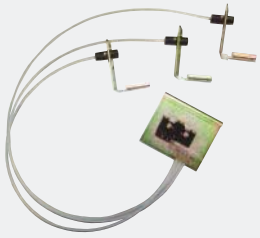

Fuse checker / Micro switch

PT(Potential transformer)

2 each of PTs can be mounted on drawout type contactors and fuse combination type.
These are 100VA and 200VA PTs rated 3.6/7.2kV.

Rated voltage(V)	Secondary voltage(V)	Class	Burden(Var)	Frequency(Hz)
3300/6600	110/220	1	100/200	50/60



PT(Potential transformer)

Fuse clip

It is used to install or uninstall a fuse link to the holder.
Its dimensions depend on ratings.

Note) Refer to fuse selection table on page 11.



Fuse clip

Auxiliary switch

Auxiliary switches are 2NO+2NC as standard and additional 3NO+3NC can be added on request.



Auxiliary switch

Position switch

This enables checking contactor positions when draw-in and draw-out.
Remote checking is also possible through signaling via micro switches in each position.

Test Position

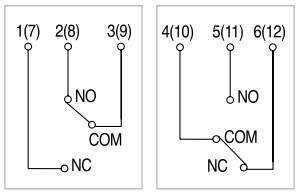

Run Position

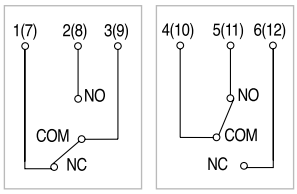

For standard draw-out types (D, G)

■ **When draw-in a contactor into a cradle.**

1. Check that the contactor is in the state of open (TEST Position).
2. While pushing the unlock push button, insert the contactor about 50mm into the cradle.
3. Release the unlock push button and push the contactor into the cradle by the RUN position.

■ **When draw-out a contactor from a cradle.**

1. Check that the contactor is in the state of open (RUN Position).
2. While pushing the unlock push button, draw the contactor about 50mm out of the cradle.
3. Release the unlock push button and pull the contactor from the cradle by the TEST position.

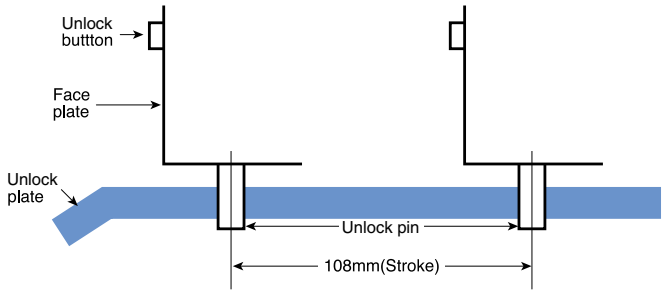

Details of TEST/RUN Position

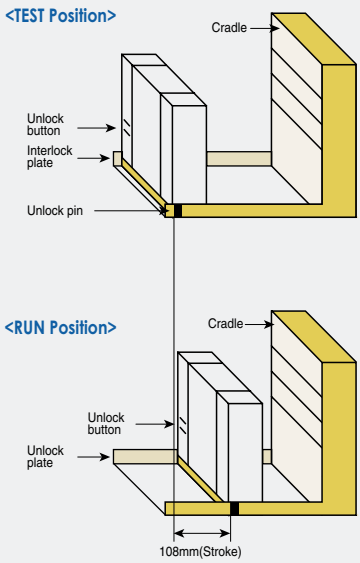

For direct draw-out types (DB, GB)

■ **When draw-in a contactor into a cradle.**

1. Check that the contactor is in the state of open (TEST Position).
2. While pushing the both sides of Interlock handle to the direction of the arrows, insert the contactor about 50mm into the cradle.
3. Insert the drawout lever into a hole as shown in the fig. While pushing the Interlock push button, swing the lever clockwise two times and release the Interlock push button.
4. Turning the lever clockwise until the contactor reaches in the RUN position.

■ **When draw-out a contactor from a cradle.**

1. Check that the contactor is in the state of open (RUN Position).
2. Insert the drawout lever into a hole as shown in the fig. While pushing the Interlock push button, swing the lever counterclockwise two times and release the Interlock push button.
4. Turning the lever counterclockwise until the contactor reaches in the TEST position.
5. In case of separating the contactor from the cradle pull the contactor while pushing the both sides of Interlock handle to the direction of the arrows as shown in the fig.

Note) Check the power before connecting or disconnecting.

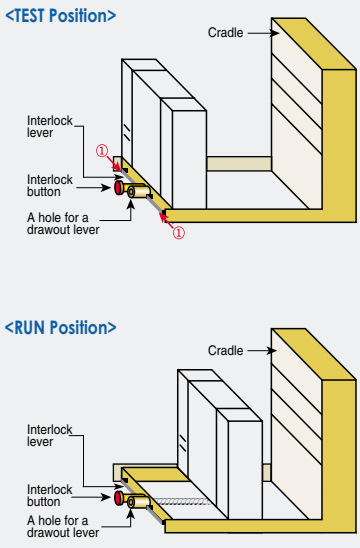

Electrical circuit diagram

Fixed type (Continuous excitation)

Continuous excitation

DC control

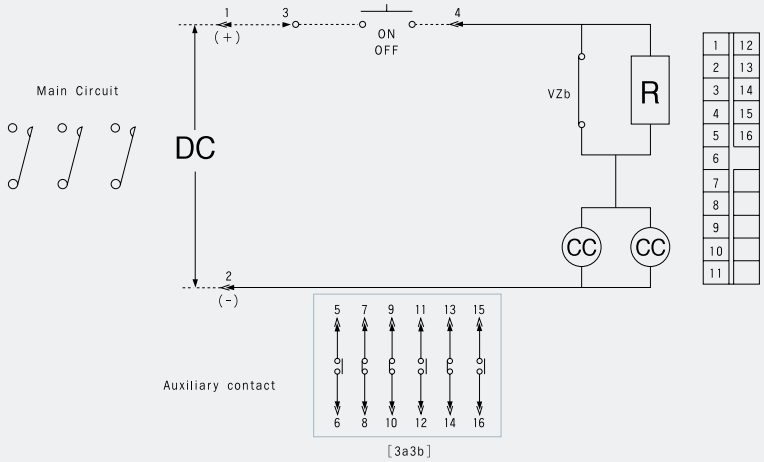

- R : Holding resistance
- CC: Input Coil
- VZb: Assistance Switch b contact (time-delayed type)

Note1) 1,2 terminal is for power supply
Note2) 3,4 point is for Open/Close of contact point
Note3) Point line(---) is user wiring

AC control

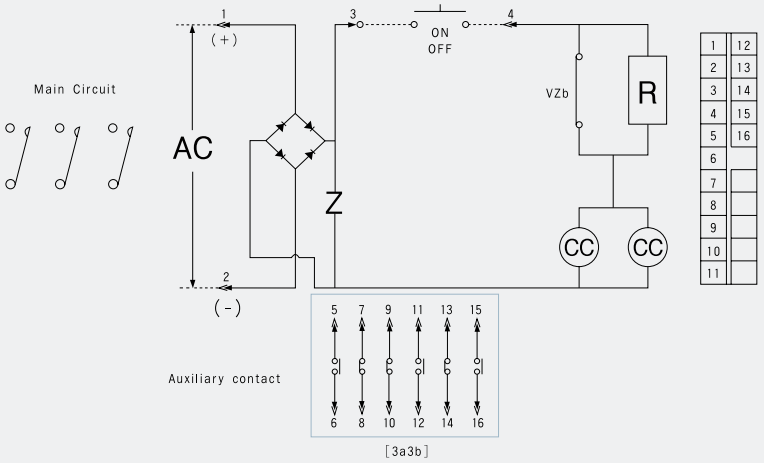

- R: Holding resistance
- CC: Input Coil
- VZb: Assistance Switch b contact (time-delayed type)

Note1) 1,2 terminal is for power supply
Note2) 3,4 point is for Open/Close of contact point
Note3) Point line(---) is user wiring

Fixed type (Instantaneous excitation)

Instantaneous excitation

DC control

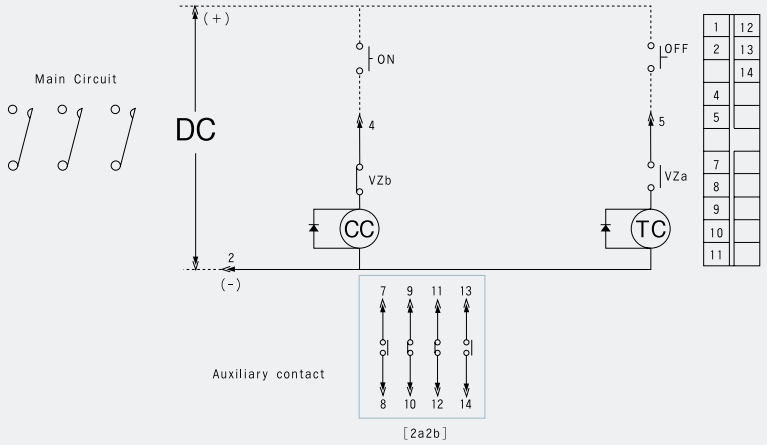

- CC: Input coil
- TC: Trip Coil
- VZb: Assistance switch b contact
- VZa: Assistance switch a contact

Note1) Close the CB by using 4(+), 2(-) terminal
Note2) Trip by using 5(+), 2(-) terminal
Note3) Contactor is not working when the reverse contact.
Note4) Point line(---) is user wiring

AC control(CTD equipped)

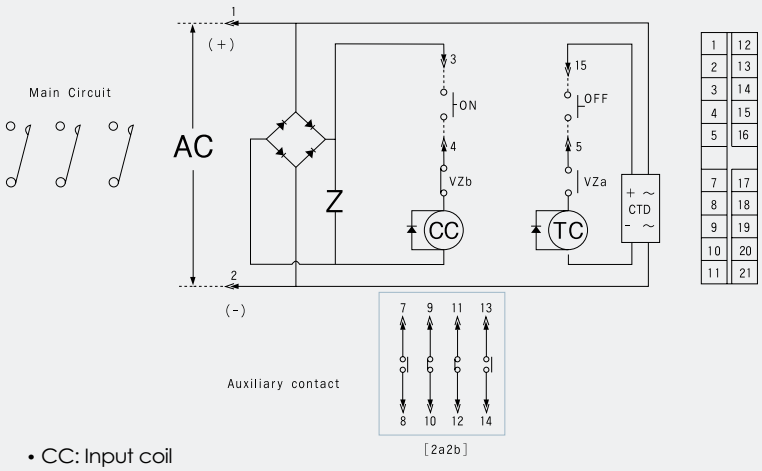

- CC: Input coil
- TC: Trip Coil
- VZb: Assistance switch b contact
- VZa: Assistance switch a contact
- CTD: Condenser Trip unit

Note1) 1~2 terminal is for power supply
Note2) Close the CB by using 3~4 terminal
Note3) Trip by using 5~15 terminal.
Note4) Point line(---) is user wiring

Internal connection diagrams

Drawout type (Continuous excitation)

Continuous excitation

DC control

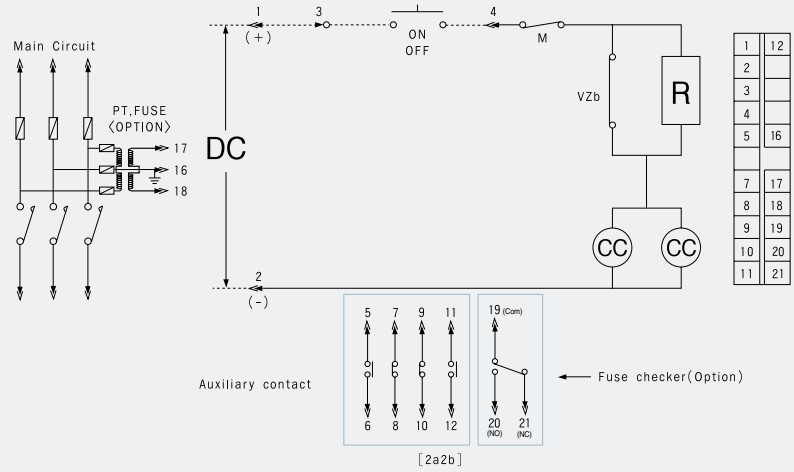

[2a2b]

- R: Holding resistance
- CC: Input Coil
- VZb: Assistance Switch b contact (time-delayed type)
- M: Microswitch for interlock

Note1) 1,2 terminal is for power supply
Note2) 3,4 point is for Open/Close of contact point
Note3) Point line(---) is user wiring

AC control

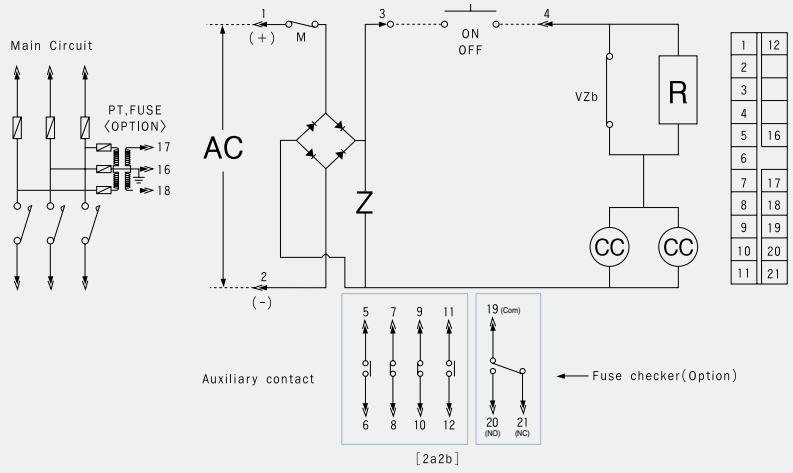

[2a2b]

- R: Holding resistance
- CC: Input Coil
- VZb: Assistance Switch b contact (time-delayed type)
- M: Microswitch for interlock

Note1) 1,2 terminal is for power supply
Note2) 3,4 point is for Open/Close of contact point
Note3) Point line(---) is user wiring

Drawout type (Instantaneous excitation)

Instantaneous excitation

DC control

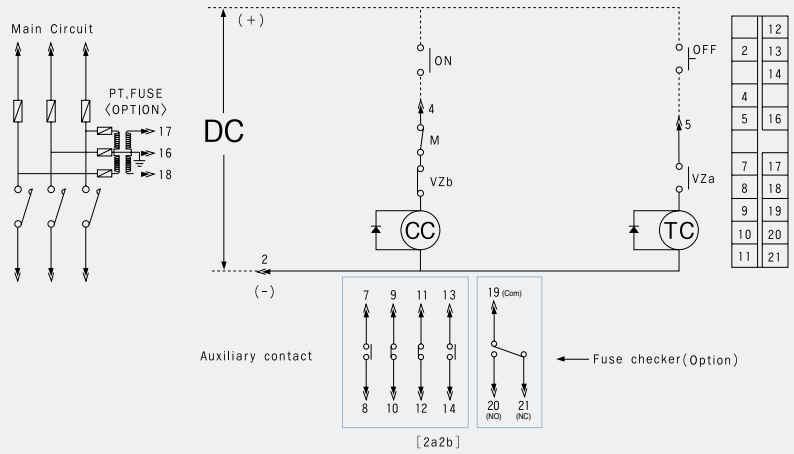

- CC: Input Coil
- TC: Trip Coil
- VZb: Assistance switch b contact
- VZa: Assistance switch a contact
- M: Microswitch for interlock

Note1) Close the CB by using 4(+), 2(-) terminal
Note2) Trip by using 5(+), 2(-) terminal
Note3) Point line(---) is user wiring
Note4) Contactor is not working when the reverse contact.

AC control(CTD equipped)

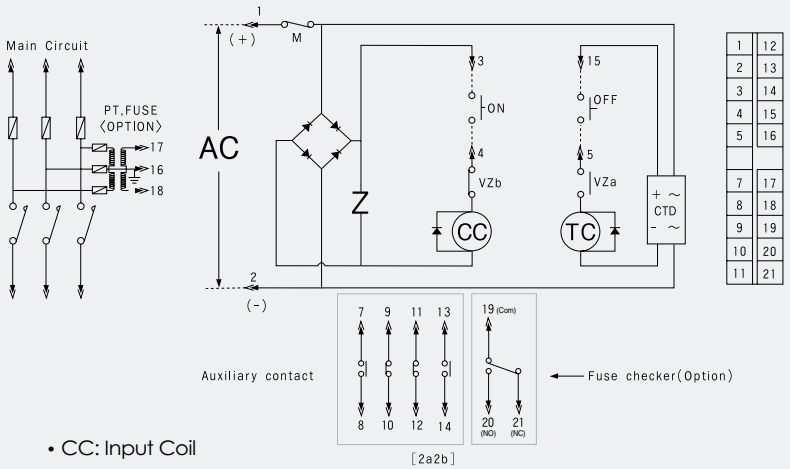

- CC: Input Coil
- TC: Trip Coil
- VZb: Assistance switch b contact
- VZa: Assistance switch a contact
- CTD: Condenser Trip unit
- M: Microswitch for interlock

Note1) 1~2 terminal is for power supply
Note2) Close the CB by using 3~4 terminal
Note3) Trip by using 5~15 terminal.
Note4) Point line(---) is user wiring

Vacuum Contactors

Connection diagramsa

Mechanical interlock type (Instantaneous excitation)

Instantaneous excitation

DC

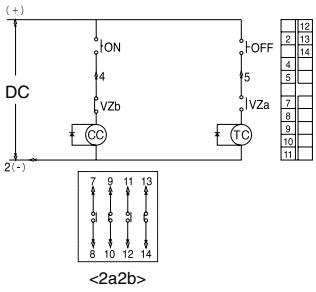

<2a2b>

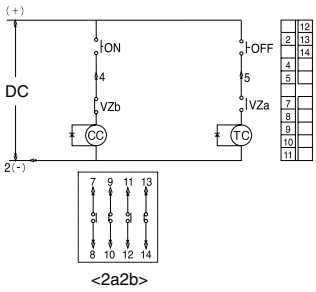

<2a2b>

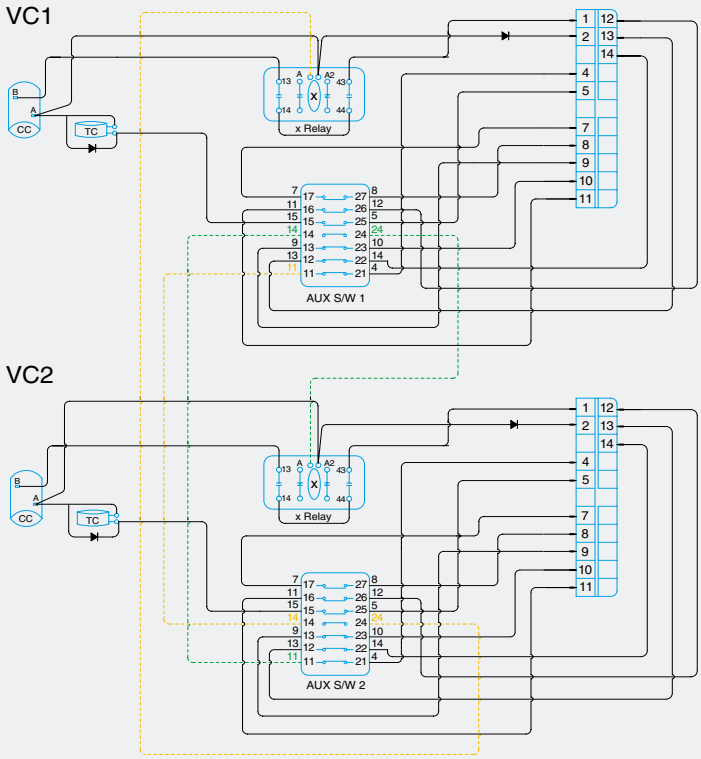

AC (With CTD)

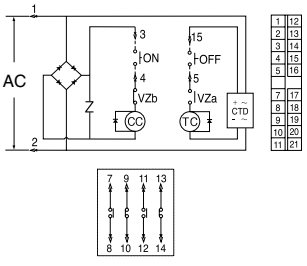

<2a2b>

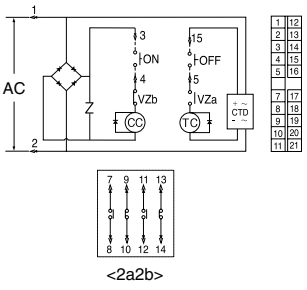

<2a2b>

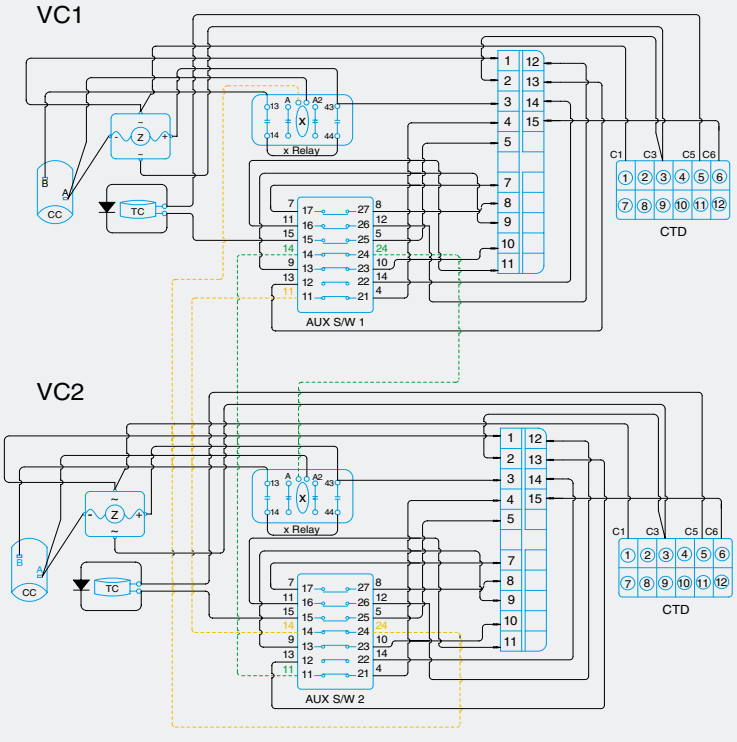

Mechanical interlock type (Continuous excitation)

Continuous excitation

DC

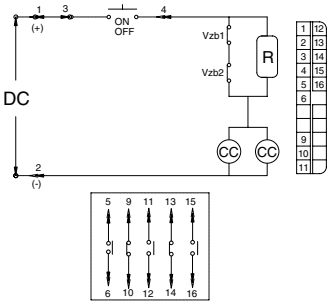

<3a2b>

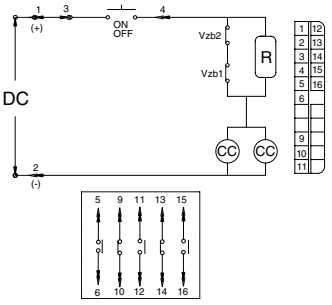

<3a2b>

VC1

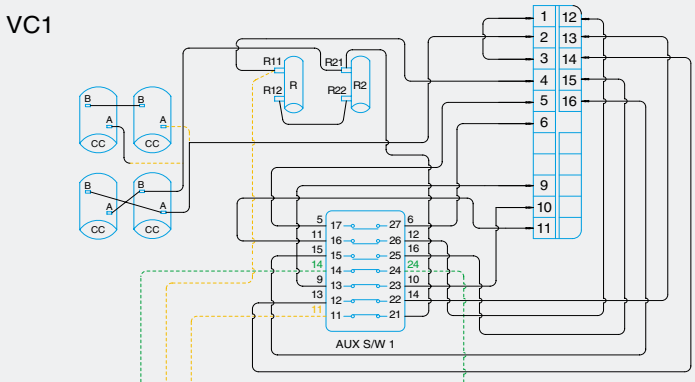

VC2

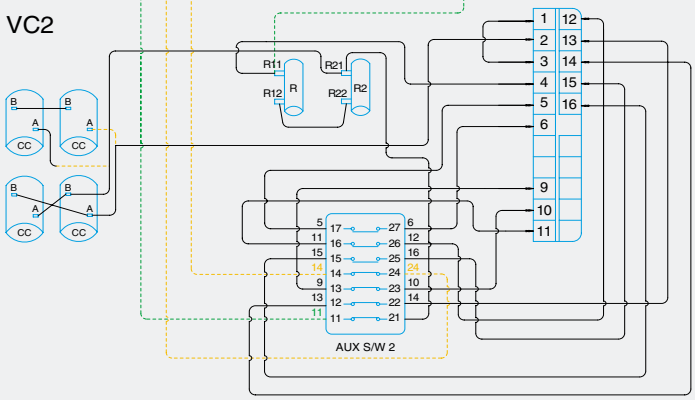

AC

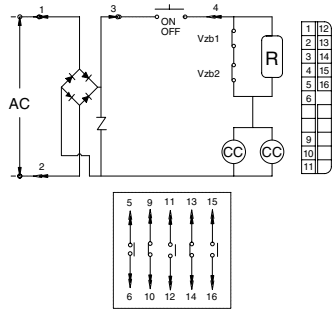

<3a2b>

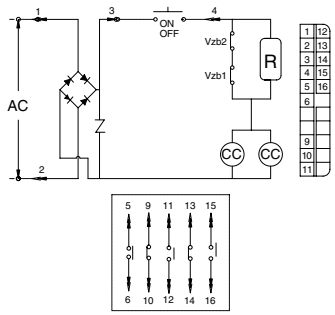

<3a2b>

VC1

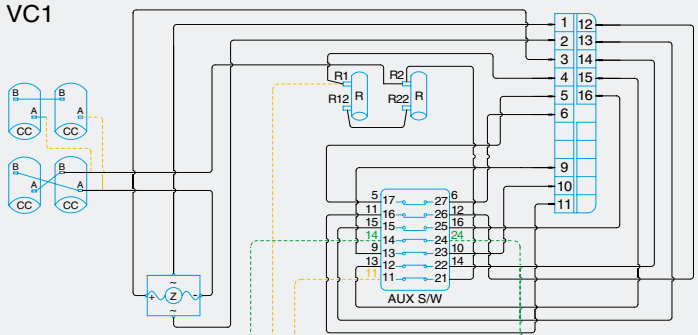

VC2

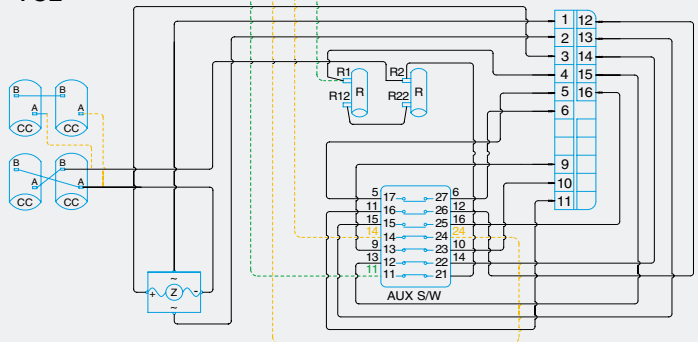

External dimensions

Fixed type

(Unit : mm)

LVC-3/6Z-42/44E(L)D

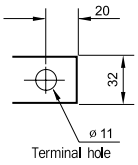

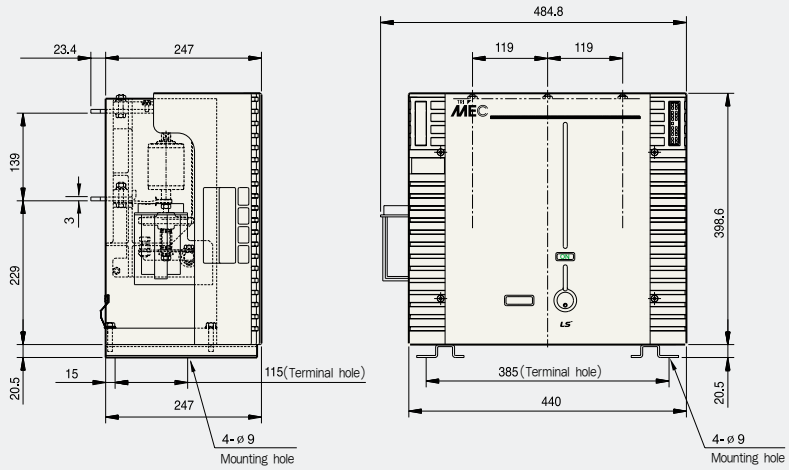

Drawout type w/o a cradle

LVC-3/6D-42/44E(L)D

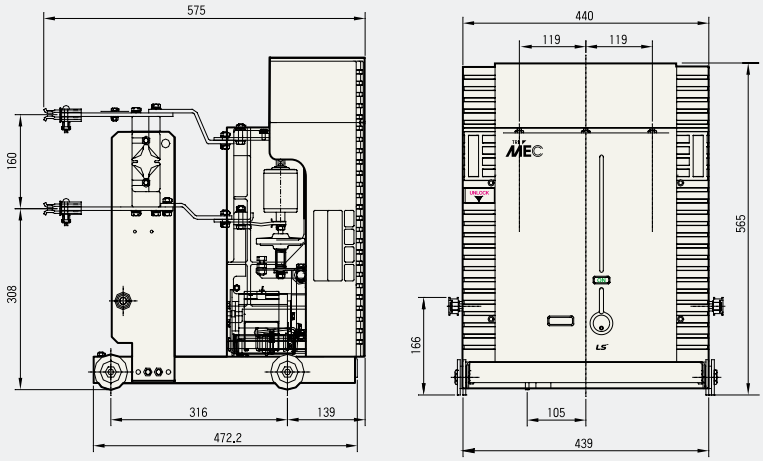

Combination drawout type w/o a cradle (Fused combination)

LVC-3/6G-42/44E(L)D

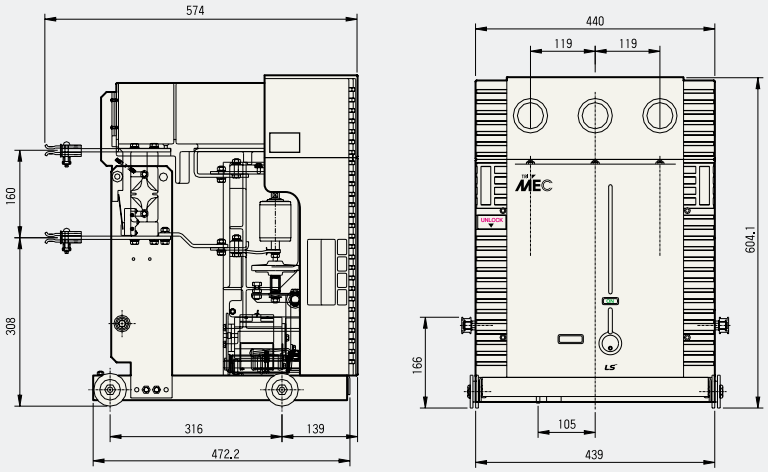

Drawout type

(Unit : mm)

E-Class Cradle

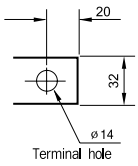

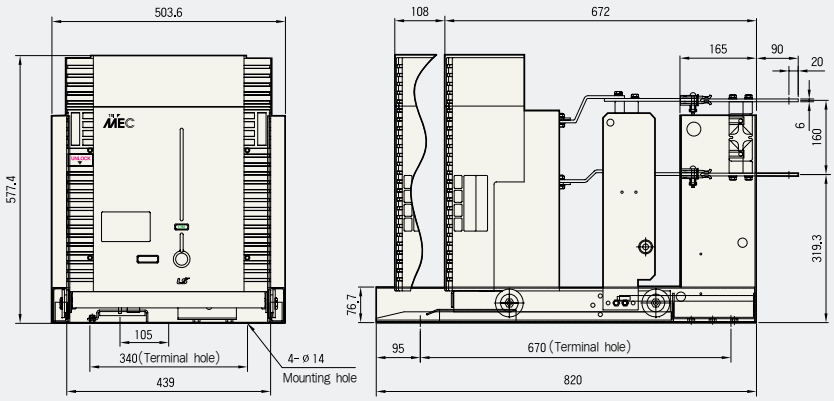

F_2-Class Cradle

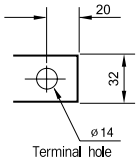

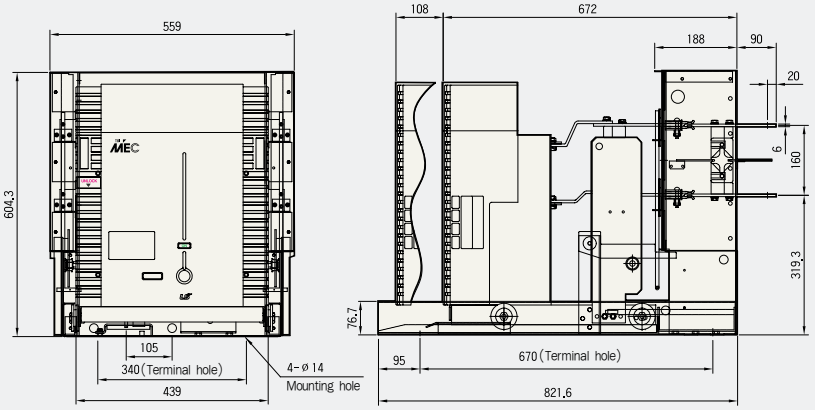

G-Class Cradle

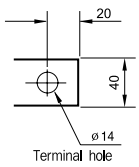

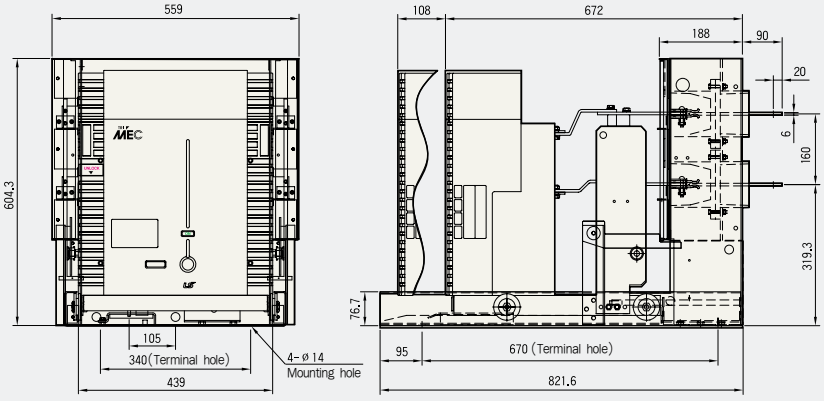

External dimensions

Combination drawout type

(Unit : mm)

(Fused combination)

E-Class Cradle

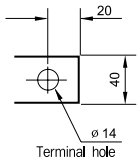

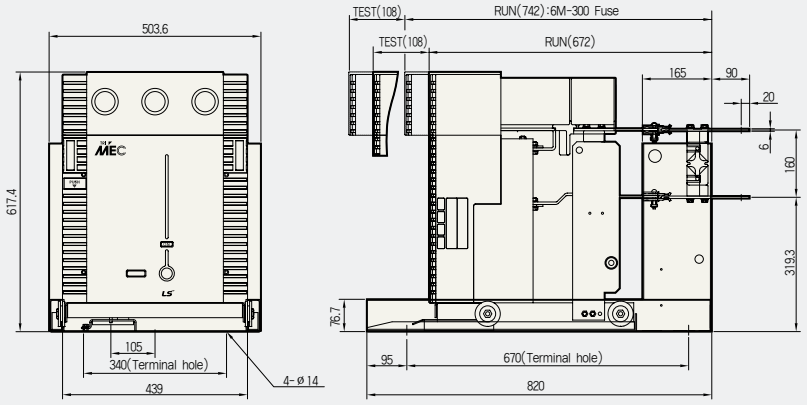

F_2-Class Cradle

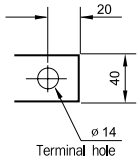

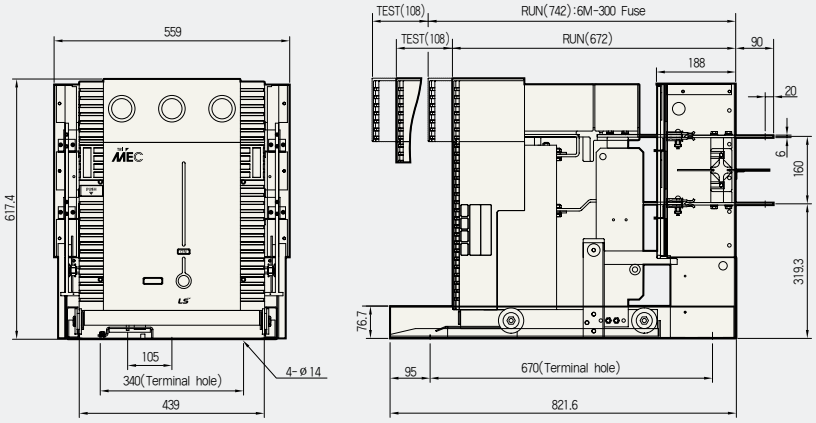

G-Class Cradle

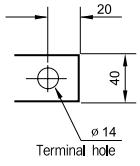

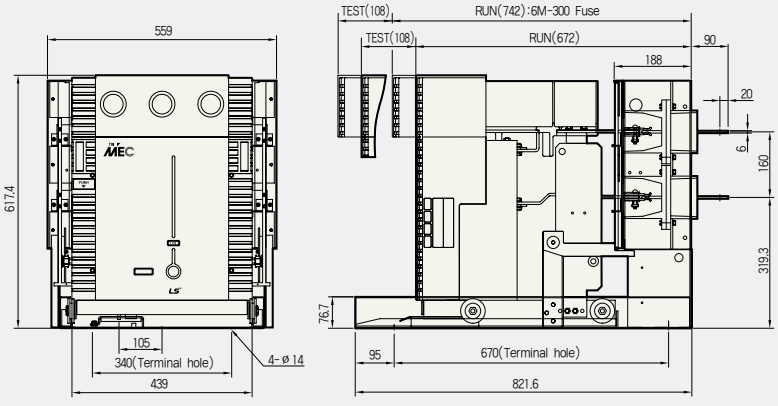

Direct-drawout type

(For MCSG)

GB-Class Cradle

(Unit : mm)

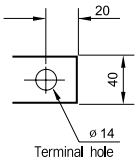

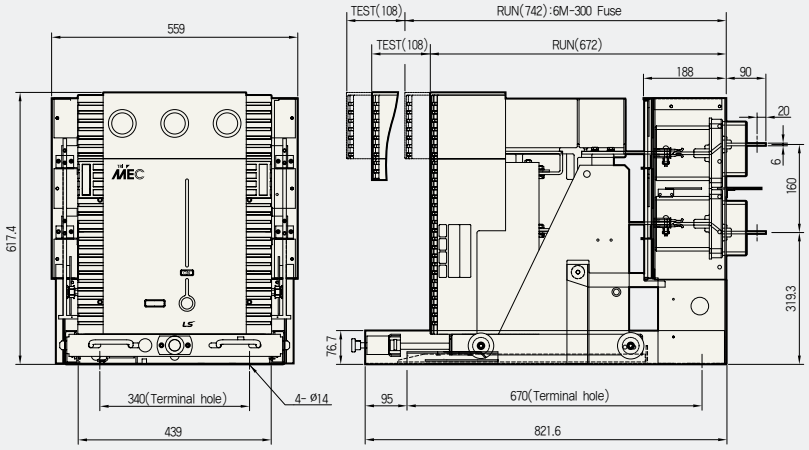

Mechanical Interlock type

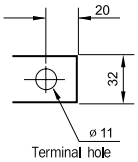

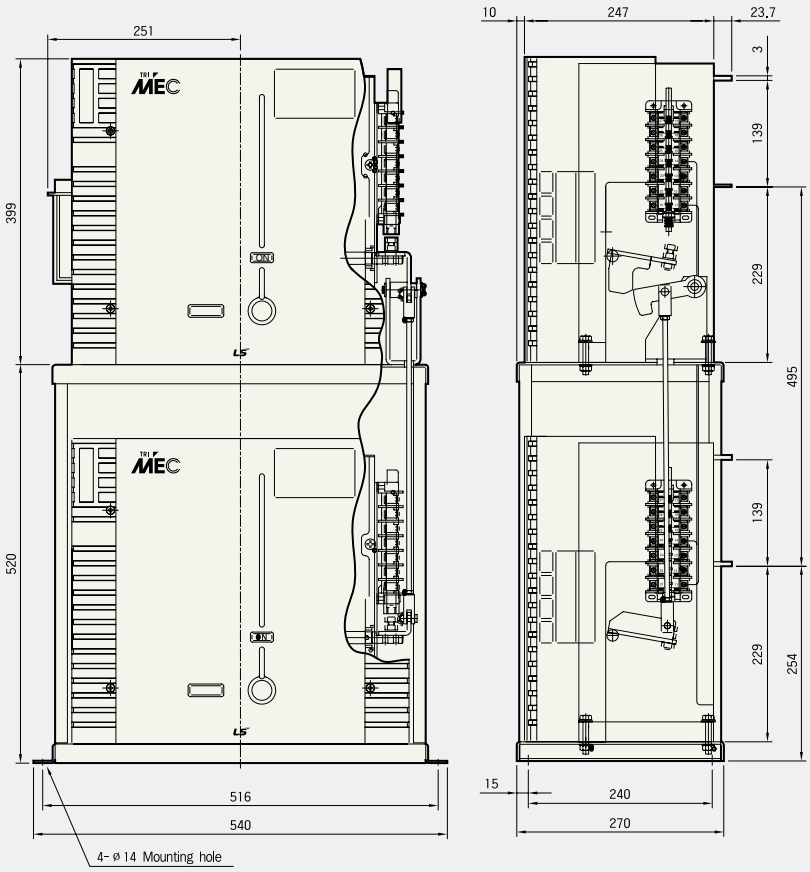

Vacuum Contactors

Selection tables

DIN type

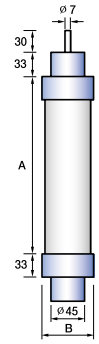

Application / Model	Fuse link: Rated voltage (kV)	Fuse link: Rated current (A)	Fuse link: Rated interrupting current (kA)	Fuse link: Lowest interrupting current (A)	Fuse selection by load: Transformer load(kVA) Single phase	Fuse selection by load: Transformer load(kVA) Three phase	Fuse selection by load: Capacitive load(kVA) Three phase
LFL - 3/6G - 5B	3.6 (7.2)	5	40	4In	4 ~ 8 ※(8 ~ 16)	6.7 ~ 14 ※(13 ~ 28)	9.8up to ※(9.8up to)
LFL - 3/6G - 10B		10			6 ~ 13 (13 ~ 25)	11 ~ 22 (21 ~ 44)	9.8 ~ 12 (19 ~ 24)
LFL - 3/6G - 20B		20			15 ~ 31 (30 ~ 62)	25 ~ 53 (51 ~ 107)	12 ~ 31 (24 ~ 61)
LFL - 3/6G - 30B		30			21 ~ 42 (40 ~ 84)	35 ~ 73 (70 ~ 145)	31 ~ 46 (61 ~ 92)
LFL - 3/6G - 40B		40			40 ~ 82 (80 ~ 165)	69 ~143 (137 ~ 286)	46 ~ 64 (92 ~ 128)
LFL - 3/6G - 50B		50			49 ~102 (98 ~ 204)	85 ~117 (170 ~ 354)	64 ~ 81 (128 ~ 163)
LFL - 3/6G - 60B		63			66 ~137 (132 ~ 275)	114 ~238 (229 ~ 476)	181 ~105 (163 ~ 210)
LFL - 3/6G - 75B		75			68 ~165 (134 ~ 330)	117 ~285 (233 ~ 571)	105 ~150 (210 ~ 300)
LFL - 3/6G - 100B		100			128 ~220 (256 ~ 440)	222 ~381 (443 ~ 762)	150 ~222 (300 ~ 445)
LFL - 3/6G - 125B		125			151 ~275 (302 ~ 550)	261 ~476 (522 ~ 952)	222 ~275 (445 ~ 550)
LFL - 3G - 160B	3.6	160			211 ~352 (-)	365 ~610 (-)	275 ~370 (-)
LFL - 3G - 200B		200			265 ~440 (-)	495 ~762 (-)	370 ~550 (-)
LFL - 6G - 160B	7.2	160			- (425 ~ 704)	- (735~1,220)	- (550~742)
LFL - 6G - 200B		200			- (437 ~ 880)	- ※(755~1,520)	- (742~1,000)

KS type

G(General use) type

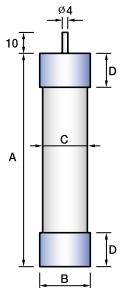

Application / Model	Fuse link: Rated voltage (kV)	Fuse link: Rated current (A)	Fuse link: Rated interrupting current (kA)	Fuse link: Lowest interrupting current (A)	Fuse selection by load: Transformer load(kVA) Single phase	Fuse selection by load: Transformer load(kVA) Three phase	Fuse selection by load: Capacitive load(kVA) Three phase
LFL - 3/6G - 5	3.6 (7.2)	5	40	5In	- ※(5up to)	5up to ※(15up to)	- ※(-)
LFL - 3/6G - 10		10			10up to (15up to)	15up to (30up to)	10up to (25up to)
LFL - 3/6G - 20		20			20up to (50up to)	30up to (75up to)	30up to (50up to)
LFL - 3/6G - 30		30			30up to (75up to)	75up to (150up to)	50up to (100up to)
LFL - 3/6G - 40		40			50up to (100up to)	100up to (200up to)	75up to (150up to)
LFL - 3/6G - 50		50			75up to (150up to)	150up to (300up to)	100up to (200up to)
LFL - 3/6G - 60		63			- (-)	- (-)	- (-)
LFL - 3/6G - 75		75			150up to (200up to)	200up to (400up to)	200up to (400up to)
LFL - 3/6G - 100	3.6	100			200up to (400up to)	375up to (750up to)	300up to (600up to)
LFL - 3G - 150		150			300up to (-)	500up to (-)	400up to (-)
LFL - 3G - 200		200			400up to (-)	750up to (-)	600up to (-)
LFL - 3G - 300		300			625up to (-)	1,000up to (-)	1,000up to (-)
LFL - 3G - 400	7.2	400			750up to (-)	1,500up to (-)	- (-)
LFL - 6G - 150		150			- (500up to)	- (1,000up to)	- (800up to)
LFL - 6G - 200		200			- (750up to)	- (1,500up to)	- (1,200up to)
LFL - 6G - 300		300			- (1,250up to)	- (2,000up to)	- (-)
LFL - 6G - 400		400			- (-)	- (2,500up to)	- (-)

M(Motor protection) type

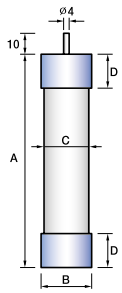

Application / Model	Fuse link: Rated voltage (kV)	Fuse link: Rated current (A)	Fuse link: Rated interrupting current (kA)	Fuse link: Lowest interrupting current (A)	Fuse selection by load: Transformer load(kVA)	Fuse selection by load: Capacitive load(kVA) Three phase
LFL - 3M - 20	3.6	20	40	7In	-	50up to ※(-)
LFL - 3M - 50		50			-	150up to (-)
LFL - 3M - 100		100			-	300up to (-)
LFL - 3M - 150		150			-	400up to (-)
LFL - 3M - 200		200			-	800up to (-)
LFL - 3M - 300		300			-	1,000up to (-)
LFL - 3M - 400		400			-	- (-)
LFL - 6M - 20	7.2	20			-	- (100up to)
LFL - 6M - 50		50			-	- (300up to)
LFL - 6M - 100		100			-	- (600up to)
LFL - 6M - 150		150			-	- (800up to)
LFL - 6M - 200		200			-	- (-)
LFL - 6M - 300		300			-	- (-)
LFL - 6M - 400		400			-	- (-)

Fuse selection by load	Dimensions(mm)				Applicable holder
Motor load(kVA) Three phase	A	B	C	D	
6.5 ~10.7 ※(13 ~ 22)	195	55	-	-	LFH-6G-D1HB
10.7~ 28 (22 ~ 36)					
28 ~ 57 (36 ~ 86)					
50 ~ 85 (86 ~ 117)					
85 ~115 (117 ~ 230)					
115 ~142 (230 ~ 284)					
138 ~191 (276 ~ 382)	192	77	-	-	
181 ~252 (362 ~ 503)					
253 ~369 (469 ~ 739)					
293 ~435 (556 ~ 870)	292	77	-	-	LFH-6G-D2HB
343 ~572 (-)					
375 ~630 (-)					
- (751~1,223)					
- (1,154~1,760)					

Fuse selection by load	Dimensions(mm)				Applicable holder
Motor load(kW) Three phase	A	B	C	D	
-	261	50	47	25	LFH-6G-D60
-					
-					
-					
-					
-					
-					
-	311	60	57	30	LFH-6G-D1H
-					
-					
-					
-	311	77	73	43	LFH-6G-D2H
-					
-					
-					
-	350	110	108	55	LFH-6G-D4H
-					
37 ~ 75 ※(-)	200	60	58	30	LFH-3M-100
90 ~ 200 (-)					
220 ~ 400 (-)					
450 ~ 630 (-)	200	77	73	43	LFH-3M-200
710 ~ 800 (-)					
900 ~1250 (-)	250	87	84	50	LFH-3M-400
1,500 (-)					
- (75 ~ 160)	311	60	58	30	LFH-6M-50
- (185 ~ 400)					
- (450 ~ 800)	350	77	73	43	LFH-6M-200
- (900 ~ 1,250)					
- (1,500)					
- (2,500)	450	87	84	50	LFH-6M-400
- (3,000)					

Selecting conditions and warning

1. ※ The values in ( ) apply to the loads of 7.2kV.
2. It is assumed that the inrush current of a transformer is 10 times of the full load current of a motor for 0.1 second.
   - The rated current of a fuse is selected to carry continuously the current of 1.5 times of rated current of a transformer.(1.3 times in the case of ※)
   - In the transformer load table it is assumed that the interruption will be made at 25 times of rated current within 2 seconds.
3. It is assumed that the inrush current of a motor is 5 times of full load current for 10 seconds.
4. In the case of using the M(motor protection) type fuses for the purpose of the short-circuit protection of a motor or a starter select the proper rating in addition refer to the characteristic curves on the catalog to make the device protected from overload by a circuit breaker or a contactor.
5. It is assumed that the inrush current of a capacitor is 71 times of its rated current for 0.002 second.
   - The rated current of a fuse is selected to carry continuously the current of 1.43 times of rated current of a capacitor.
   - In case service life of more than 1000 operations is required select in the M(motor protection) type fuse table.
6. The above mentioned comments are according to KS(Korean Industrial Standard) and subject to the real situation.



DIN-Type fuse

Power fuse

LS Prime-MEC power fuses are designed to protect equipments from fault current such as short-circuit, and generally used for the protection the circuits of transformers, capacitors and motors they protect.

For further safety and reliability the elements inside of fuses are made of silver, and high quality quartzs and and ceramic are used for magnetic rods and tubes, respectively.

LS medium voltage vacuum contactors using LS vacuum interrupters manufactured with worldclass technology are type tested in LS PT & T that is accredited high power test lab by worldclass KOLAS. To ensure the performance they, installed in a vacuum contactor, are tested according to IEC 60282-1 in LS PT & T that is accredited high power test lab by worldclass KOLAS.


KERI

개별시험성적서

KERI(24kV)

Considerations in application

- Power fuses are suitable for the protection from a short-circuit, Overload current will not protected.
- Reset or re-use after blowing is not possible. Fuse reset or re-use is not possible after fused are blown out.
- When the fuses are selected, the inrush currents arising from the starting transformers, motors, capacitors should be considered.
- When the fuses are selected, their usage and circuit requirements should be considered.
- For the purpose of protection from the fault current below the lowest interrupting current of the fuse it is desirable to replace it with a fuse having lower interrupting rate or add other overcurrent relay in series
- Withstand voltage of the circuit should be higher than that of a fuse that protects it.
- If possible, select the fuse whose rated current is much higher than the load current. The rated current not sufficiently exceeding the normal current of the load may cause reduction in the service life.
- Replace all three fuses in case of blowing in a fuse.

Determination of the rated current

The rated current of the fuse must be selected properly after examination of the current/time characteristics of fuses, equipments and the related circuit conditions.

General considerations

- When the fuses are selected the sufficient rated current should be considered to avoid the deterioration of the fuse element due to sustained load current in the long term.
- The fuse rated current should be higher than the sum of all load currents.
- The estimated overload current should be within the fuse's time/current characteristics.The estimated overload current should not exceed the allowable overload withstand currents of the equipment and the number of its events should not exceed 100 times.
- The characteristic curve of a fuse must lie to the right of those of other equipments to be protected.
- The withstand strength such as permissible let-through current, I^2t of the equipments to be protected must be higher than that of a fuse.
- Coordination of permissible time limit
  Protection equipments in the line side < Fuses < Protection equipments in the load side
- Coordination when fuses are used as back-up protection
  Permissible let-through current of a fuse < That of a protection equipment
- Use the same rating for all three phases even the differential current between phases exists.

Power fuse selection guides

Considerations by the type of load

1. Power fuses for transformer loads

- The fuse with sufficient rated current must be selected to avoid the deterioration of the fuse element due to permissible overload in the long term.
- The fuse's current/time characteristic should cover the inrush current/time of the transformer.
- In case of power transformers the symmetrical inrush current must be within 10 times of the fuse rating and the fuse should withstand at least 0.1second under the condition.
- Fuse rated current ≥ Transformer rated current
- The lowest interrupting current of the fuse < Short circuit current in the primary of the fuse
- In case of protection of two or more transformers
  - Fuse rating should be selected on the basis of the phase condition where maximum current flows.
  - In the event of short-circuit in the secondary of the transformer
    The lowest interrupting current of the fuse < Short circuit current in the primary of the transformer
- In case of potential transformers
  - When the fuses are selected do not consider the short-circuit happening in the secondary of the PT, but protecting PT itself and the circuit against the fault in the primary side.
  - Select the fuse with higher rated current than the load current so as not to be damaged by overcurrent.
  - The characteristic curve of a fuse must lie to the right of those of other equipments to be protected.
  - The withstand strength such as permissible let-through current, I^2t of the equipments to be protected must be higher than that of a fuse.

Note) Refer to the general considerations other than the above mentioned.

2. Power fuses for motor loads

- The fuse with sufficient rated current must be selected to avoid the deterioration of the
  - fuse element due to permissible overload in the long term.
- The fuse's current/time characteristic should cover the inrush current/time of the motor.
  - The inrush current of the motor must be within 5 times of the fuse rating and the fuse should withstand at least 10 seconds under the condition.

  Fuse rated current ≥ Motor full load current

Note) Refer to the general considerations other than the above mentioned.

3. Power fuses for combination with vacuum contactors

- The current at the intersection between a fuse characteristic curve and a contactor operation curve should greater than the lowest interrupting current of a fuse.
- And the current at the cross point between a fuse curve and a contactor minimum dropout curve should not greater than the rated interrupting current of a contactor.

Note) Refer to the general considerations other than the above mentioned.

4. Power fuses for capacitor loads

- The fuse with sufficient rated current must be selected to avoid the deterioration of the fuse element due to permissible overload in the long term.
- The fuse's current/time characteristic should cover the inrush current/time of the capacitor.
- The size of inrush current depends on whether or not the serial reactors and parallel capacitors exist.
- The inrush current of the capacitor must be within 70 times of the fuse rating and the fuse should withstand at least 0.002 second under the condition.

  Fuse rated current ≥ Capacitor rated current
- In the case of serial reactor(6%) connected the inrush current must be within 5 times of the fuse rating and the fuse should withstand at least 0.1 second under the condition

Note) Refer to the general considerations other than the above mentioned.



Power fuses for transformer loads



Power fuses for motor loads

Coordination graph

Coordination between fuse and transformer circuit

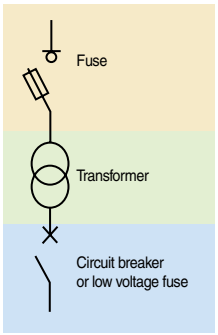

① Full load current of a transformer
② The lowest interrupting current of the secondary circuit breaker
③ Permissible overload current of a transformer
④ Rated current of a fuse
⑤ Lowest blow-out current of a fuse
⑥ Lowest interrupting current of a fuse
⑦ Inrush current at no load of a transformer
⑧ Secondary short-circuit current
⑨ Rated interrupting current of a secondary circuit breaker
⑩ Primary short-circuit current
⑪ Rated interrupting current of a fuse

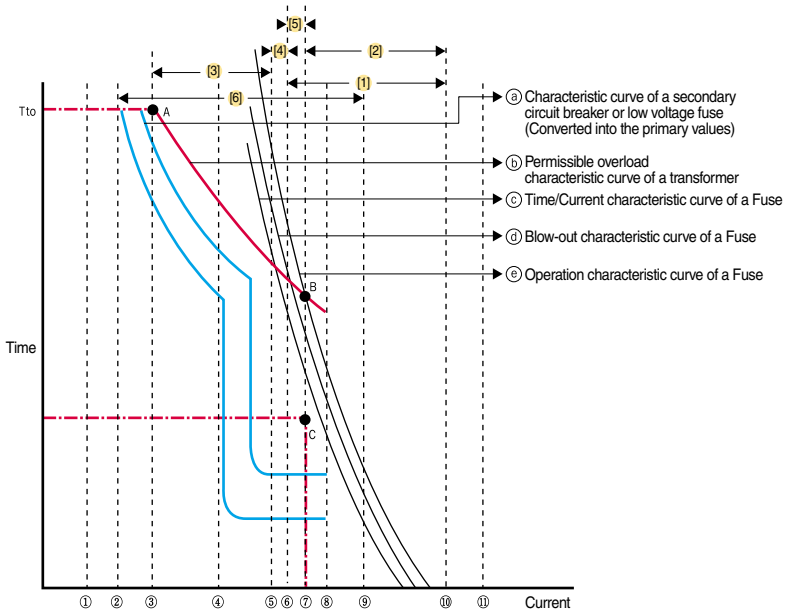

A. Permissible overload current/time of a transformer
B. Permissible overload characteristic of a transformer, Operation characteristic curve of a Fuse
C. inrush current and time at no load of a transformer

※ Coordination in the graph

- **Zone of [1]** : Protection of primary side from short-circuit by a fuse
- **Zone of [2]** : Protection of a transformer
- **Zone of [3]** : Out of the scope of fuse operation
- **Zone of [4]** : Interruption is not ensured even though the fuse blows.
- **Zone of [5]** : Protection of a transformer is not ensured even though the fuse interrupts the circuit.
- **Zone of [3]+[4]+[5]** : No protection zone of a transformer Circuit breaker or low voltage fuse required for the transformer protection

When any protection device is not installed in the secondary of a transformer

- Permissible overload current of a transformer (point ③)) must lie to the left of the curve ⓒ(time/current characteristic curve of a Fuse)
  Full load current of a transformer ① ≤ Rated current of a fuse ④
- Point C(inrush current and time at no load of a transformer) must lie to the left of the point ⓒ(time/current characteristic curve of a Fuse)
- Secondary short-circuit current⑧ > Lowest interrupting current of a fuse ⑥
  Point B must lie to the left of the secondary short-circuit current⑧.
- Primary short-circuit current⑩ < Rated interrupting current of a fuse⑪

When a circuit breaker or fuse is installed in the secondary of a transformer

- Must meet the requirements above mentioned in ①
- The characteristic curve of a secondary circuit breaker or low voltage fuse ⓐ must lie to the left of permissible overload characteristic curve of a transformer ⓑ and under the point B
- The characteristic curve of a secondary circuit breaker or low voltage fuse ⓐ must lie to the Time/Current characteristic curve of a Fuse and under the Secondary short-circuit current ⑧.
- Secondary short-circuit current⑧ < Characteristic curve of a secondary circuit breaker or low voltage fuse ⓐ
- The secondary circuit breaker or low voltage fuse should meet the above mentioned requirements to each branch circuit.
- Another medium voltage protection device is required for the ensured protection against the fault happening between the secondary protection devices and the internal short-circuit of a transformer in the zone of [3]+[4]+[5].

Coordination between fuse and motor circuit

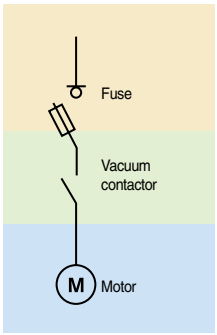

① Full load current of a motor
② Rated current of a fuse
③ Inrush current of a motor (Locked rotor current)
④ Lowest interrupting current of a fuse
⑤ Rated interrupting current of a vacuum contactor
⑥ Short-circuit current
⑦ Rated interrupting current of a fuse

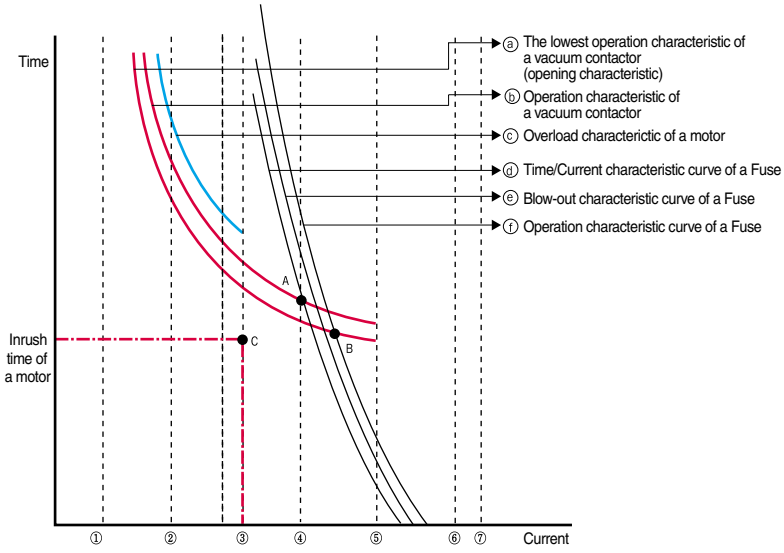

A : (Operation characteristic of a vacuum contactor, Time/Current characteristic curve of a Fuse)
B : (The lowest operation characteristic of a vacuum contactor, Operation characteristic curve of a Fuse)
C : (Inrush current of a motor, Inrush time of a motor)

- Full load current of a motor① ≤ Rated current of a fuse②
- Short-circuit current⑥ < Rated interrupting current of a fuse⑦
- Inrush current of a motor (Locked rotor current)③ < Rated interrupting current of a vacuum contactor⑤
- Point C must lie to the left of ⓐ(The lowest operation characteristic of a vacuum contactor)and ⓓ(Time/Current characteristic curve of a Fuse)
- Operation characteristic of a vacuum contactorⓑ must lie to the left of ⓒ(Overload characteristic of a motor)
- Point A must lie to the right of ④ Lowest interrupting current of a fuse.
- Point B must lie to the left of ⑤ Rated interrupting current of a vacuum contactor.

Note) The current less than point A can be protected by a vacuum contactor, and the current greater than point B is to be protected by a fuse.

Operation curves

DIN Type

3.6/7.2kV blowing characteristic

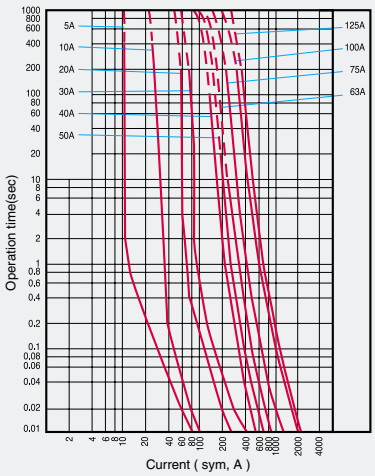

3.6/7.2kV current limiting characteristic

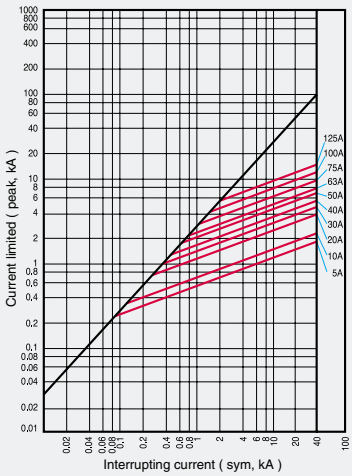

3.6kV blowing characteristic

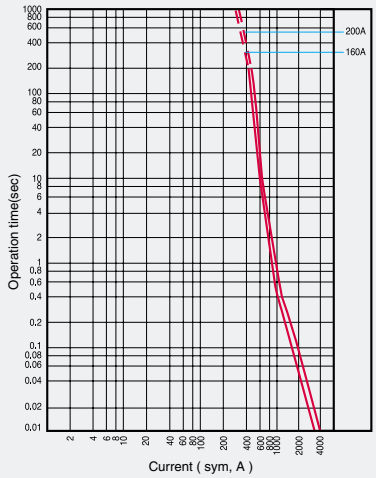

3.6kV current limiting characteristic

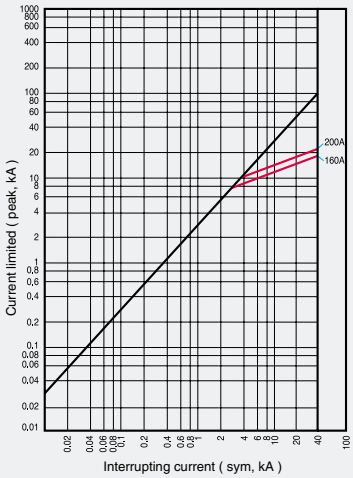

7.2kV blowing characteristic

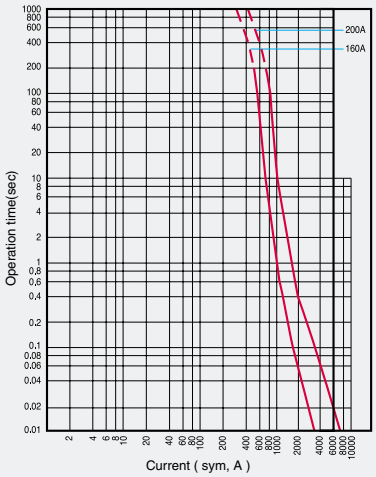

7.2kV current limiting characteristic

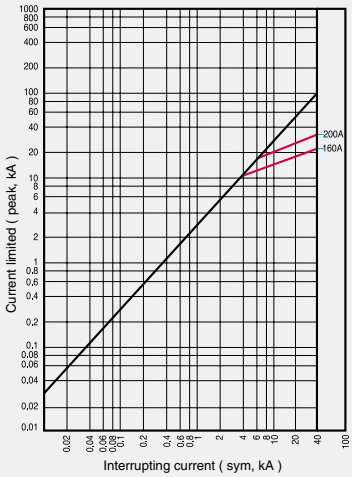

KS Type

G(General use) type fuse

3.6/7.2kV blowing characteristic

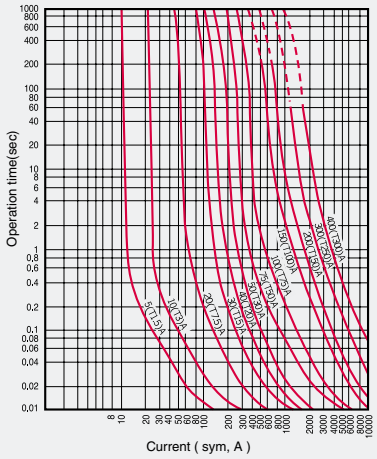

3.6/7.2kV current limiting characteristic

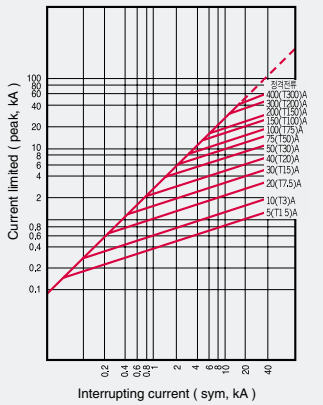

M(Motor protection) type fuse

3.6kV blowing characteristic

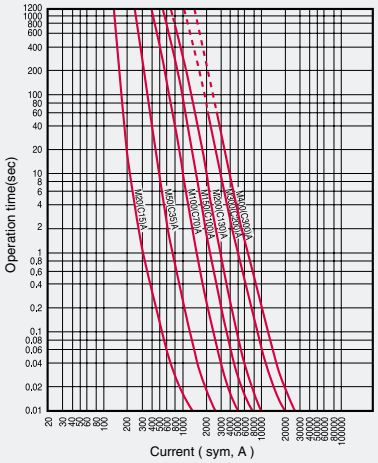

7.2kV blowing characteristic

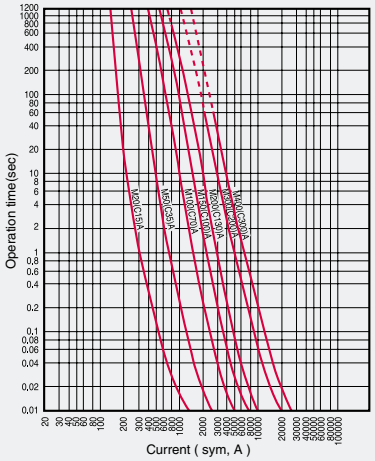

3.6kV, 7.2kV current limiting characteristic

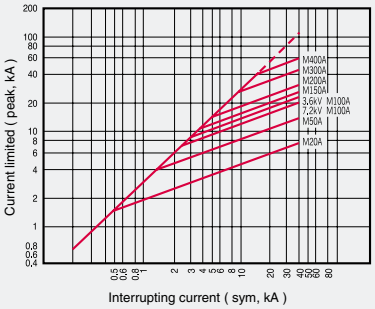

Green Innovators of Innovation



Safety Instructions

- For your safety, please read user's manual thoroughly before operating.
- Contact the nearest authorized service facility for examination, repair, or adjustment.
- Please contact a qualified service technician when you need maintenance.
  Do not disassemble or repair by yourself!
- Any maintenance and inspection shall be performed by the personnel having expertise concerned.

LSIS Co., Ltd.

© 2003.4 LSIS Co.,Ltd. All rights reserved.

www.lsis.com

HEAD OFFICE

LS-ro 127 (Hogye-dong) Dongan-gu Anyang-si
Gyeonggi-do Korea
Tel. (82-2)2034-4840, 4911, 4914
Fax. (82-2)2034-4648

CHEONG-JU PLANT

Cheong-Ju Plant #1, 95 Baekbong-ro Heungdeok-gu
Cheongju-si Chungcheongbuk-do 361-720 Korea

Specifications in this catalog are subject to change without notice due to continuous product development and improvement.

Global Network

- **LSIS USA Inc. ›› Chicago, America**
  Address: 2000 Millbrook Drive, Lincolnshire, Chicago, IL 60069, United States of America
  Tel: 847-941-8240 Fax: 847-941-8259 e-mail: seungheonc@lsis.com
- **LSIS (Middle East) FZE ›› Dubai, U.A.E.**
  Address: LOB 19 JAFZA VIEW TOWER Room 205, Jebel Ali Freezone P.O. Box 114216, Dubai, United Arab Emirates
  Tel: 971 4 886 5360 Fax: 971 4 886 5361 e mail: hschoib@lsis com
- **LSIS Europe B.V. ›› Schiphol-Rijk, Netherlands**
  Address: 1st. Floor, Tupolevlaan 48, 1119NZ,Schiphol-Rijk, The Netherlands
  Tel: 31-20-654-1420 Fax: 31-20-654-1429 e-mail: junshickp@lsis.biz
- **LSIS-VINA Co., Ltd. ›› Hanoi, Vietnam**
  Address: Nguyen Khe - Dong Anh - Ha Noi - Viet Nam
  Tel: 84-4-882-0222 Fax: 84-4-882-0220 e-mail: sjbaik@lsis.biz
- **LSIS-VINA Co., Ltd. ›› Hochiminh, Vietnam**
  Address: 41 Nguyen Thi Minh Khai Str. Yoco Bldg 4th Floor, Hochiminh City, Vietnam
  Tel: 84-8-3822-7941 Fax: 84-8-3822-7942 e-mail: hjchoid@lsis.biz
- **LSIS Gurgaon Office ›› Gurgaon, India**
  Address: 109 First Floor, Park Central, Sector-30, Gurgaon- 122 002, Haryana, India
  Tel: +0091-124-493-0070 Fax: 91-1244-930-066 e-mail: hwyim@lsis.biz
- **LSIS Japan Co., Ltd. ›› Tokyo, Japan**
  Address: Toykokurakubu Bldg. 13th floor, 3-2-6, Kasumigaseki, Chiyoda-ku, Tokyo, 100-0013 Japan
  TEL:+81-3-6268-8241 FAX:+81-3-6268-8240 e-mail: jschuna@lsis.biz
- **LSIS Shanghai Office ›› Shanghai, China**
  Address: Room 32 floors of the Great Wall Building, No. 3000 North Zhongshan Road, Putuo District, Shanghai, China
  Tel: 86-21-5237-9977 Fax: 89-21-5237-7189 e-mail: mkleea@lsis.com
- **LSIS Beijing Office ›› Beijing, China**
  Address: B-Tower 17FL.Beijing Global Trade Center B/D. No.36, BeiSanHuanDong-Lu, DongCheng-District, Beijing 100013, P.R. China
  Tel: 86-10-5825-6025,7 Fax: 86-10-5825-6026 e-mail: sunmj@lsis.com.cn
- **LSIS Guangzhou Office ›› Guangzhou, China**
  Address: Room 1403, 14/F, New Poly Tower, No.2 Zhongshan Liu Road, Guangzhou 510180, P.R. China
  Tel: 020-8326-6754 Fax: 020-8326-6287 e-mail: chenxs@lsis.com.cn
- **LSIS Chengdu Office ›› Chengdu, China**
  Address: Room 1701 17Floor, huamin hanjun internationnal Building, No1 Fuxing Road Chengdu, 610016, P.R. China
  Tel: 86-28-8670-3201 Fax: 86-28-8670-3203 e-mail: yangcf@lsis.com.cn
- **LSIS Qingdao Office ›› Qingdao, China**
  Address: Room 2001,20/F,7B40, Galaxy Building, No.29 Shandong Road, Shinan District, Qingdao 266071, P.R. China
  Tel: 86-532-8501-6058 Fax: 86-532-8501-6057 e-mail: htroh@lsis.biz
- **LSIS (Wuxi) Co., Ltd. ›› Wuxi, China**
  Address: 102-A , National High & New Tech Industrial Development Area, Wuxi, Jiangsu, 214028, P.R.China
  Tel: 86-510-8534-6666 Fax: 86-510-522-4078 e-mail: wangzy@lsis.com.cn
- **Dalian LSIS Co., Ltd. ›› Dalian, China**
  Address: No.15, Liaohexi 3-Road, Economic and Technical Development zone, Dalian 116600, China
  Tel: 86-411-8273-7777 Fax: 86-411-8730-7560 e-mail: tangyh@lsis.com.cn

2014. 02 LS Medium Voltage Vacuum Contactors (E) 2003. 04/(21) 2014. 02 Printed in Korea STAFF