XR32330

3-Driver/3-Receiver Intelligent RS-232 Transceiver with 1.65V-5.5V Interface

General Description

The XR32330 product is a 3-driver/ 3-receiver RS-232 transceiver featuring a variable low voltage logic interface, down to 1.65V. This product is intended for portable or hand-held applications such as bar code scanners as well as point-of-sales terminals, security and industrial control applications. The XR32330EBER device features slew-rate limited outputs for reduced crosstalk and EMI.

The XR32330 uses an internal high-efficiency charge-pump power supply that requires only four 0.1µF capacitors in 3.3V operation. This charge pump combined with Exar's driver architecture allow the XR32330 to deliver compliant RS-232 performance from a single power supply ranging from +3.0V to +5.5V.

The AUTO ON-LINE® feature allows the device to automatically "wake-up" during a shutdown state when an RS-232 cable is connected and a connected peripheral is turned on. Otherwise, the device automatically shuts itself down drawing less than 1µA.

FEATURES

- Meets true EIA/TIA-232-F Standards from a +3.0V to 5.5V power supply
- 1.65V to 5.5V Logic Interface V_L pin
- AUTO ON-LINE circuitry automatically wakes up from a 1µA shutdown
- Regulated Charge Pump yields stable RS-232 Outputs regardless of V_{CC} variations
- Enhanced ESD Specifications
  - ±15kV Human Body Model
  - ±15kV IEC61000-4-2 Air Discharge
  - ±8kV IEC61000-4-2 Contact Discharge
- 250Kbps min transmission rate (speed grade B)
- -40°C to 85°C ambient operating temperature
- Lead-free (RoHS 6) QFN package

APPLICATIONS

- Portable and Hand-Held Equipment
- Industrial and Process Control Equipment
- Point-Of-Sales Equipment
- Building Security and Automation

Ordering Information – Last Page

Typical Operating Circuit and Package Pinout

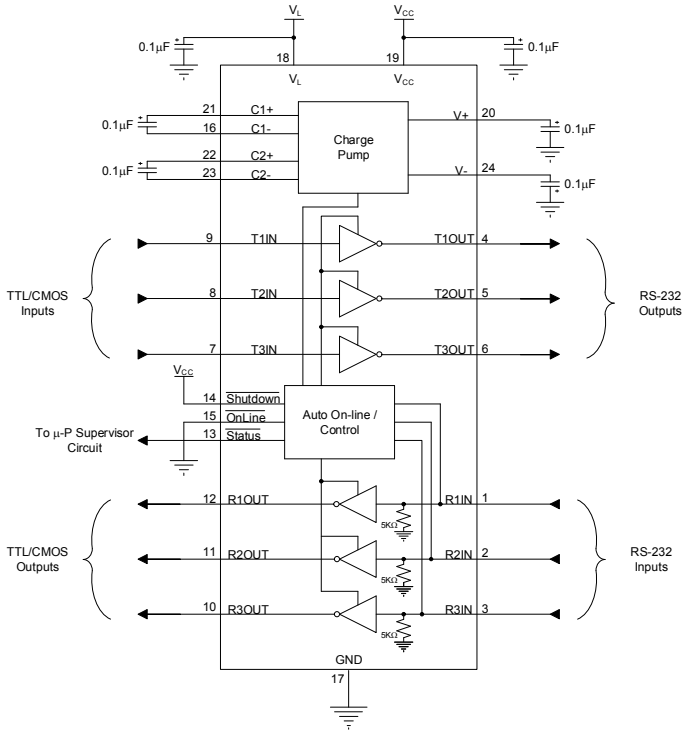

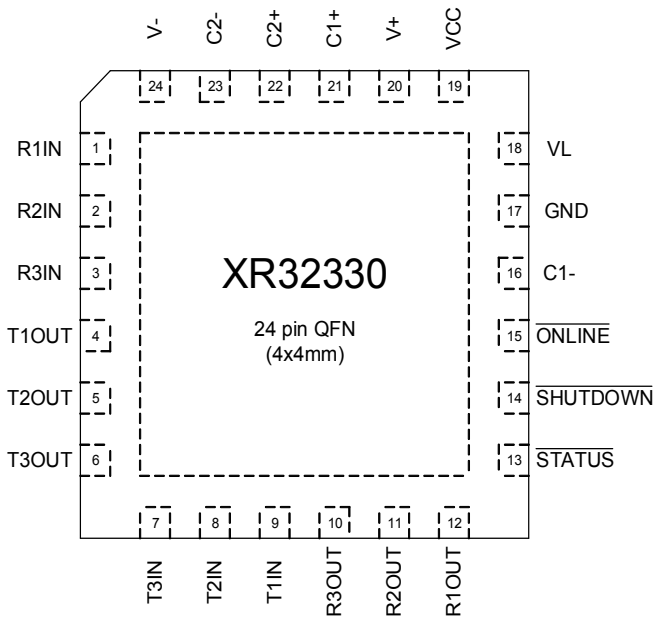

Absolute Maximum Ratings

Stresses beyond those listed under Absolute Maximum Ratings may cause permanent damage to the device. Exposure to any Maximum Rating condition for extended periods may affect device reliability and lifetime.

Supply Voltage (V_{CC}).....-0.3V to +6.0V

Logic Interface Voltage (V_L).....$V_L \le V_{CC}$

V+.....-0.3V to +7.0V

V-.....+0.3V to -7.0V

V+ + |V-| .....±13V

I_{CC} (DC V_{CC} or GND current).....±100mA

Junction Temperature.....125°C

Input Voltages

TxIN, $\overline{\text{ONLINE}}$, $\overline{\text{SHUTDOWN}}$,.....-0.3V to +6.0V

RxIN.....±15V

Output Voltage

TxOUT.....±13.2V

RxOUT, $\overline{\text{STATUS}}$.....-0.3V to +6.0V

Short-Circuit Duration

TxOUT.....Continuous

Storage Temperature.....-65°C to +150°C

ESD Rating RS-232 Bus pins

HBM - Human Body Model.....±15kV

IEC614000-4-2 Air Discharge.....±15kV

IEC614000-4-2 Contact Discharge.....±8kV

Operating Conditions

Operating Temperature Range.....-40°C to +85°C

V_{CC} Supply Range..... 3.0V to 5.5V

V_L I/O Supply Range ($V_L \le V_{CC}$)..... 1.65V to 5.5V

Thermal Information (24 Ld QFN (4x4mm))

Θ_{JA} .....39.2 (°C/W)

Θ_{JC} .....15.3 (°C/W)

Electrical Characteristics

Specifications are at T_A = 25°C, V_{DD} = 3.3V±10% or 5.0V±10%, V_L = V_{DD}; Limits applying over the full operating temperature range are denoted by a "•". Typical values represent the most likely parametric norm at T_A = 25°C, and are provided for reference purposes only.

Symbol	Parameter	Conditions		Min	Typ	Max	Units
DC CHARACTERISTICS							
I_{CC1}	Supply Current, AUTO ON-LINE® enabled	All RxIN open, $\overline{ONLINE}$ = GND, $\overline{SHUTDOWN}$ = V_L, V_{CC} = V_L = 3.3V, TxIN = V_L or GND	•		1.0	10	µA
I_{CC2}	Supply Current, Shutdown	$\overline{SHUTDOWN}$ = GND, V_{CC} = V_L = 3.3V, TxIN = V_L or GND	•		1.0	10	µA
I_{CC3}	Supply Current, AUTO ON-LINE® disabled	$\overline{ONLINE}$ = $\overline{SHUTDOWN}$ = V_L, no load, V_{CC} = V_L = 3.3V, TxIN = V_L or GND	•		0.3	1.0	mA
LOGIC INPUTS AND OUTPUTS							
V_{IL}	Input Low Voltage	TxIN, $\overline{ONLINE}$, $\overline{SHUTDOWN}$; 1.65V ≤ V_L ≤ 5.5V & V_L ≤ V_{CC}	•			1/3 * V_L	V
V_{IH}	Input High Voltage		•	2/3 * V_L			V
I_{IL}	Input Leakage Current	TxIN, $\overline{ONLINE}$, $\overline{SHUTDOWN}$; T_{AMB} = 25°C, V_{IN} = 0V to V_L			±0.01	±1.0	µA
I_{OL}	Output Leakage Current	$\overline{STATUS}$, RxOUT (Receivers disabled); V_{OUT} = 0V to V_L	•		±0.05	±10	µA
V_{OL}	Output Low Voltage	$\overline{STATUS}$, RxOUT; I_{OUT} = 1.5mA	•			0.4	V
V_{OH}	Output High Voltage	$\overline{STATUS}$, RxOUT; I_{OUT} = -1.5mA	•	V_L - 0.6			V
DRIVER OUTPUTS							
V_{SWING}	Output Voltage Swing	All drivers outputs loaded with 3KΩ to GND	•	±5.0	±5.4		V
O_R	Output Resistance	V_{CC} = V+ = V- = 0V, V_{OUT} = ±2V	•	300			Ω
I_{OSC}	Output Short-Circuit Current	V_{OUT} = 0V	•		±35	±60	mA
I_{OL}	Output Leakage Current	V_{CC} = 0V or 3.0V to 5.5V, V_{OUT} = ±12V	•			±25	µA
RECEIVER INPUTS							
IVR	Input Voltage Range		•	-15		+15	V
V_{IL}	Input Low Voltage	V_{CC} = 3.3V	•	0.6	1.2		V
		V_{CC} = 5.0V	•	0.8	1.5		V
V_{IH}	Input High Voltage	V_{CC} = 3.3V	•		1.5	2.4	V
		V_{CC} = 5.0V	•		1.8	2.4	V
Rx_{HYS}	Receiver Input Hysteresis				0.3		V
Rx_R	Receiver Input Resistance		•	3	5	7	KΩ
AUTO ON-LINE CIRCUITRY CHARACTERISTICS ($\overline{ONLINE}$ = GND, $\overline{SHUTDOWN}$ = V_L, V_L = V_{CC})							
Rx_{STSH}	Receiver Threshold to $\overline{STATUS}$ high level		•	-2.7		+2.7	V

Symbol	Parameter	Conditions		Min	Typ	Max	Units
Rx_{STSL}	Receiver Threshold to $\overline{STATUS}$ low level		•	-0.3		+0.3	V
t_{STSH}	Receiver Threshold to $\overline{STATUS}$ high	Figure 9			0.2		µs
t_{STSL}	Receiver Threshold to $\overline{STATUS}$ low	Figure 9			30		µs
t_{ONLINE}	Receiver Thresholds to Drivers Enabled	Figure 9, (charge pump fully discharged when receiver threshold crossed)			30		µs
$t_{OFFLINE}$	Receiver Thresholds to Drivers Disabled	Figure 9			35		µs
TIMING CHARACTERISTICS							
f_{MAX}	Maximum Output Frequency	R_L = 3KΩ, C_L = 1000pF, 1 driver active	•	250			Kbps
t_{PHL}	Receiver Propagation Delay (high to low)	Receiver input (<10ns rise/fall) to Receiver output, C_L = 150pF			0.15		µs
t_{PLH}	Receiver Propagation Delay (low to high)	Receiver input (<10ns rise/fall) to Receiver output, C_L = 150pF			0.15		µs
t_{RxSKEW}	Receiver Skew	$\lvert t_{PHL} - t_{PLH} \rvert$			50		ns
t_{RxOE}	Receiver Output Enable Time	Normal operation			200		ns
t_{RxOD}	Receiver Output Disable Time	Normal operation			200		ns
t_{TxSKEW}	Driver Skew	$\lvert t_{PHL} - t_{PLH} \rvert$ (Driver propagation delays)	•		100	500	ns
Tx_{SLEW}	Transition-Region Slew Rate	V_{CC} = 3.3V, R_L = 3KΩ to 7KΩ, C_L = 150pF to 1000pF, Measured from -3.0V to +3.0V or +3.0V to -3.0V	•	6		30	V/µs

Pin Configuration

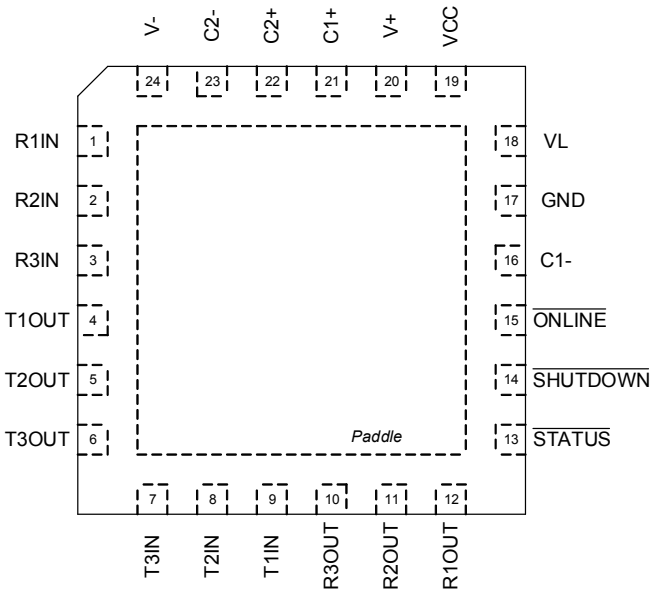

Pin Assignments

Pin No.	Pin Name	Type	Description
1, 2, 3	R1IN, R2IN, R3IN	Inputs (5KΩ pull-dwn)	±15KV ESD Protected, RS-232 Receiver Inputs
4, 5, 6	T1OUT, T2OUT, T3OUT	Output	±15KV ESD Protected, RS-232 Driver Output
7, 8, 9	T3IN, T2IN, T1IN	Input	TTL/CMOS Driver Input
10, 11, 12	R3OUT, R2OUT, R1OUT	Output	TTL/CMOS Receiver Output
13	$\overline{\text{STATUS}}$	Output	TTL/CMOS level output indicating if no valid RS-232 levels are present at the R1IN, R2IN or R3IN input pins.
14	$\overline{\text{SHUTDOWN}}$	Input	TTL/CMOS level input, when driven low puts the XR32330 into shutdown mode (tri-stating driver outputs and disabling the charge-pump); normal operation when driven high.
15	$\overline{\text{ONLINE}}$	Input	TTL/CMOS level input. A low input enables Auto On-Line mode, a high input disables Auto On-Line Mode.
16, 21	C1-, C1+	Analog	Negative and positive terminals of voltage doubler charge pump capacitor.
17	GND	Supply	Ground
18	V_L	Supply	I/O Power Supply
19	V_{CC}	Supply	Power Supply
20	V+	Analog	Regulated positive (+5.5V) charge pump rail.
22, 23	C2+, C2-	Analog	Positive and negative terminals of the inverting charge pump capacitor.
24	V-	Analog	Regulated negative (-5.5V) charge pump rail.
-	Paddle	Supply	Ground. The exposed paddle on the bottom of package is connected to device ground. The paddle should be connected to ground on pcb.

Functional Block Diagram

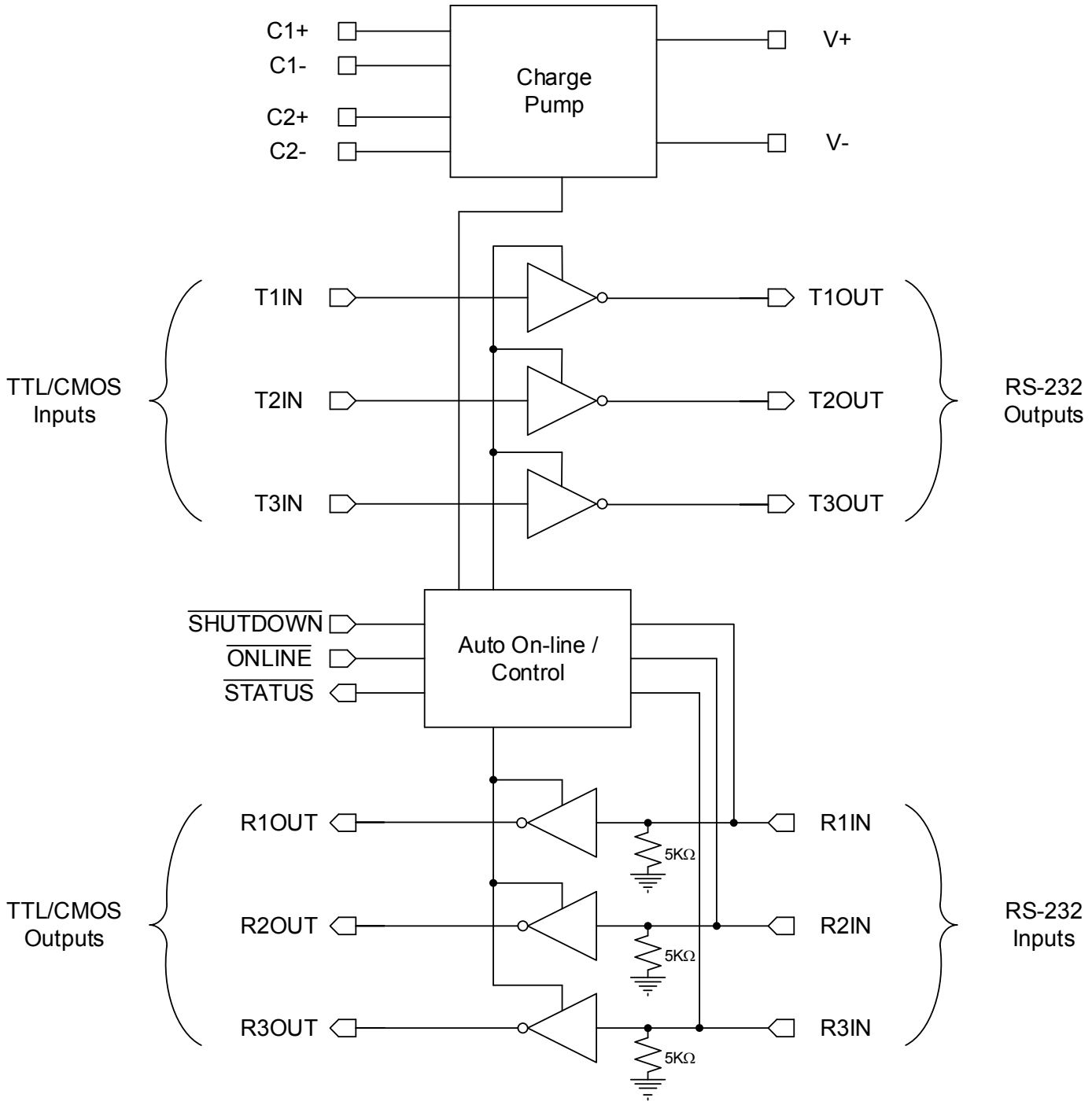

Typical Performance Characteristics

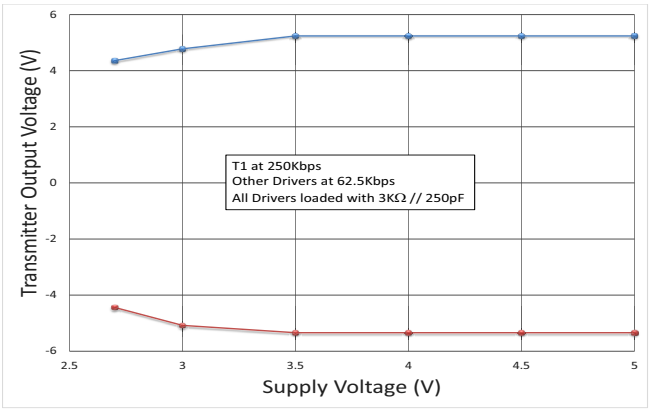

Figure 1: Transmitter Output Voltage vs Supply Voltage

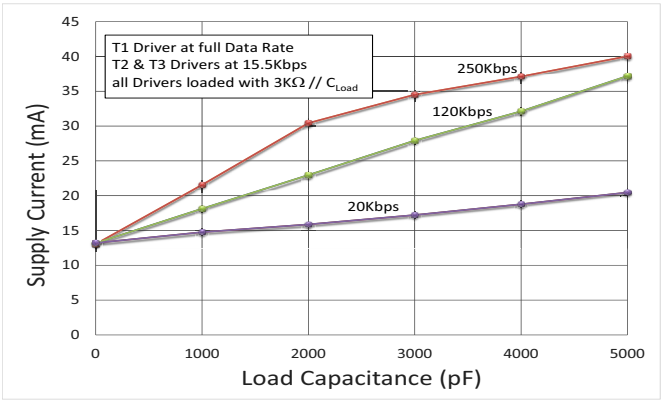

Figure 2: Supply Current vs Load Capacitance

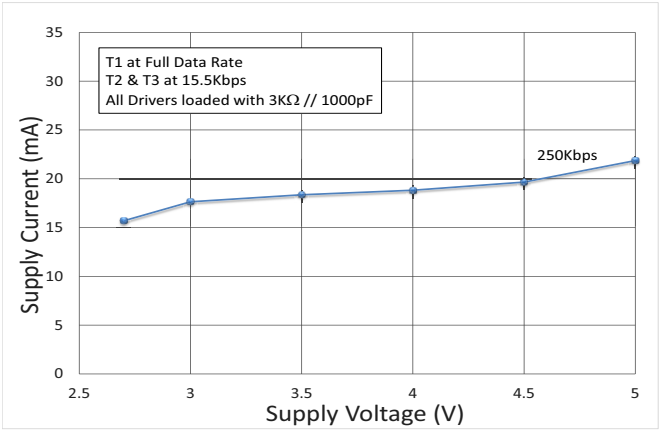

Figure 3: Supply Current vs Supply Voltage

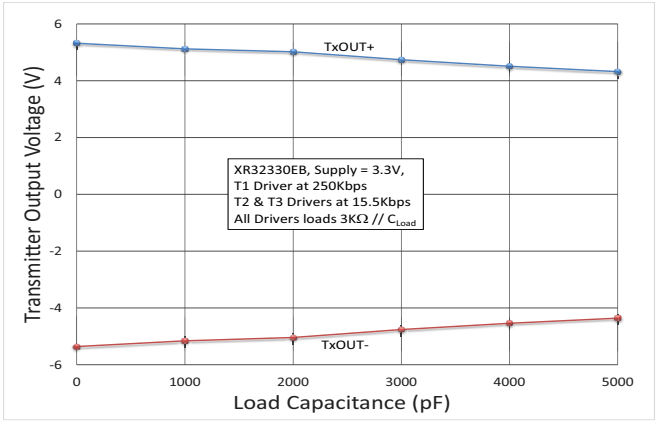

Figure 4: Transmitter Output Voltage vs Load Capacitance

Application Information

General Description

The XR32330 transceiver meets the EIA/TIA-232 and ITU-T V.28/V.24 communication protocols and can be implemented in portable or hand-held applications such as bar code scanners as well as point-of-sales terminals, security and industrial control applications. The XR32330 device features Exar's proprietary and patented (U.S. 5,306,954) on-board charge pump circuitry that generates ±5.5V RS-232 voltage levels from a single +3.0V to +5.5V power supply.

The XR32330 is a 3-driver/3-receiver device, ideal for portable or hand-held applications.

The XR32330 is an ideal choice for power sensitive designs. The XR32330 devices feature AUTO ON-LINE® circuitry which reduces the power supply drain to a 1µA supply current.

In many portable or hand-held applications, an RS-232 cable can be disconnected or a connected peripheral can be turned off. Under these conditions, the internal charge pump and the drivers will be shut down. Otherwise, the system automatically comes online. This feature allows design engineers to address power saving concerns without major design changes.

Theory of Operation

The XR32330 series is made up of four basic circuit blocks:

1. Drivers
2. Receivers
3. The Exar proprietary charge pump, and
4. AUTO ON-LINE® circuitry.

Drivers

The drivers are inverting level transmitters that convert TTL or CMOS logic levels to 5.0V EIA/TIA-232 levels with an inverted sense relative to the input logic levels. Typically, the RS-232 output voltage swing is ±5.5V with no load and ±5V minimum fully loaded. The driver outputs are protected against infinite short-circuits to ground without degradation in reliability. These drivers comply with the EIA-TIA-232-F and all previous RS-232 versions. Unused drivers inputs should be connected to GND or V_L.

The drivers have a minimum data rate of 250kbps fully loaded.

Receivers

The receivers convert +5.0V EIA/TIA-232 levels to TTL or CMOS logic output levels. Receivers are High-Z when the AUTO ON-LINE® circuitry is enabled and activated or when in shutdown. The truth table logic of the XR32330 driver and receiver outputs can be found in Table 2 on page 11.

Since receiver input is usually from a transmission line where long cable lengths and system interference can degrade the signal, the inputs have a typical hysteresis margin of 300mV. This ensures that the receiver is virtually immune to noisy transmission lines. Should an input be left unconnected, an internal 5KΩ pull-down resistor to ground will commit the output of the receiver to a HIGH state.

Charge Pump

The charge pump is a Exar–patented design (U.S. 5,306,954) and uses a unique approach compared to older less–efficient designs. The charge pump still requires four external capacitors, but uses a four–phase voltage shifting technique to attain symmetrical ±5.5V power supplies. The internal power supply consists of a regulated dual charge pump that provides output voltages of ±5.5V regardless of the input voltage (V_{CC}) over the +3.0V to +5.5V range. This is important to maintain compliant RS-232 levels regardless of power supply fluctuations.

The charge pump operates in a discontinuous mode using an internal oscillator. If the output voltages are less than a magnitude of ±5.5V, the charge pump is enabled. If the output voltages exceed a magnitude of ±5.5V, the charge pump is disabled. This oscillator controls the four phases of the voltage shifting. A description of each phase follows.

Phase 1

V- charge storage, see **Figure 5** — During this phase of the clock cycle, the positive side of capacitors C1 and C2 are initially charged to V_{CC}. C1+ is then switched to GND and the charge in C1– is transferred to C2–. Since C2+ is connected to V_{CC}, the voltage potential across capacitor C2 is now 2 times V_{CC}.

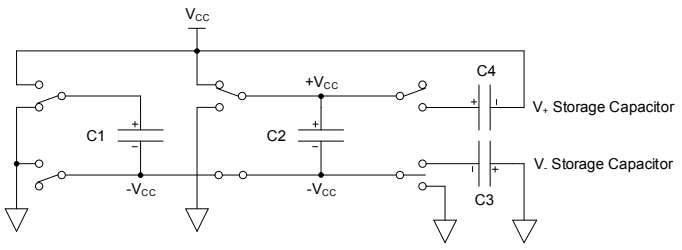

Figure 5: Charge Pump - Phase 1

Phase 2

V- transfer, see **Figure 6** — Phase two of the clock connects the negative terminal of C2 to the V- storage capacitor and the positive terminal of C2 to GND. This transfers a negative generated voltage to C3. This generated voltage is regulated to a minimum voltage of -5.5V. Simultaneous with the transfer of the voltage to C3, the positive side of capacitor C1 is switched to V_{CC} and the negative side is connected to GND.

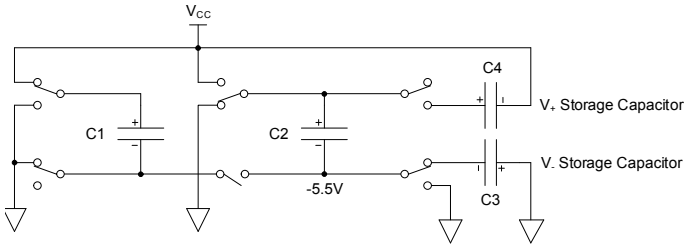

Figure 6: Charge Pump - Phase 2

Phase 3

V+ charge storage, see **Figure 7** — The third phase of the clock is identical to the first phase — the charge transferred in C1 produces $-V_{CC}$ in the negative terminal of C1, which is applied to the negative side of capacitor C2. Since C2+ is at V_{CC}, the voltage potential across C2 is 2 times V_{CC}.

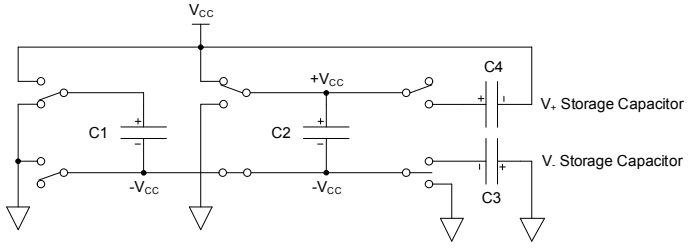

Figure 7: Charge Pump - Phase 3

Phase 4

V+ transfer, see **Figure 8** — The fourth phase of the clock connects the negative terminal of C2 to GND, and transfers this positive generated voltage across C2 to C4, the V+ storage capacitor. This voltage is regulated to +5.5V. At this voltage, the internal oscillator is disabled. Simultaneous with the transfer of the voltage to C4, the positive side of capacitor C1 is switched to V_{CC} and the negative side is connected to GND, allowing the charge pump cycle to begin again. The charge pump cycle will continue as long as the operational conditions for the internal oscillator are present.

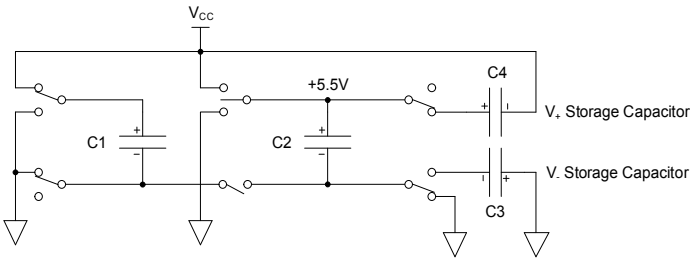

Figure 8: Charge Pump - Phase 4

Since both V+ and V– are separately generated from V_{CC}, in a no–load condition V+ and V– will be symmetrical. Older charge pump approaches that generate V– from V+ will show a decrease in the magnitude of V– compared to V+ due to the inherent inefficiencies in the design. The clock rate for the charge pump typically operates at greater than 250kHz. The external capacitors can be as low as 0.1µF with a 16V breakdown voltage rating.

The Exar-patented charge pumps are designed to operate reliably with a range of low cost capacitors. Either polarized or non polarized capacitors may be used. If polarized capacitors are used they should be oriented as shown in the Typical Applications Circuit. The V+ capacitor may be connected to either ground or V_{CC} (polarity reversed.)

The charge pump operates with 0.1µF capacitors for 3.3V operation. For other supply voltages, see the table for required capacitor values. Do not use values smaller than those listed. Increasing the capacitor values (e.g., by doubling in value) reduces ripple on the transmitter outputs and may slightly reduce power consumption. C2, C3, and C4 can be increased without changing C1's value.

Table 1:

Minimum Recommended Charge Pump Capacitor Values	
Supply Voltage V_{CC}	Charge Pump Capacitor Value for XR32330
3.0V to 3.6V	C1 - C4 = 0.1µF
4.5V to 5.5V	C1 = 0.047µF, C2 - C4 = 0.33µF
3.0V to 5.5V	C1 - C4 = 0.22µF

For best charge pump efficiency locate the charge pump and bypass capacitors as close as possible to the IC. Surface mount capacitors are best for this purpose. Using capacitors with lower equivalent series resistance (ESR) and self-inductance, along with minimizing parasitic PCB trace inductance will optimize charge pump operation. Designers are also advised to consider that capacitor values may shift over time and operating temperature.

AUTO ON-LINE® Circuitry

The XR32330 devices have a patent pending AUTO ON-LINE® circuitry on board that saves power in applications such as hand held and portable systems.

The XR32330 devices incorporate an AUTO ON-LINE® circuit that automatically enables itself when the external transmitters are enabled and the cable is connected. Conversely, the AUTO ON-LINE® circuit also disables most of the internal circuitry when the device is not being used and goes into a standby mode where the device typically draws 1µA. This function is externally controlled by the $\overline{\text{ONLINE}}$ pin. When this pin is tied to a logic LOW, the AUTO ON-LINE® function is active. Once active, the device is enabled until there is no activity on the receiver inputs. The receiver input typically sees at least +3V, which are generated from the transmitters at the other end of the cable with a +5V minimum.

When the external transmitters are disabled or the cable is disconnected (see **Figure 9**), the receiver inputs will be pulled down by their internal 5kΩ resistors to ground. When this occurs over a period of time, the internal transmitters will be disabled and the device goes into a shutdown or standby mode. When $\overline{\text{ONLINE}}$ is HIGH, the AUTO ON-LINE® mode is disabled.

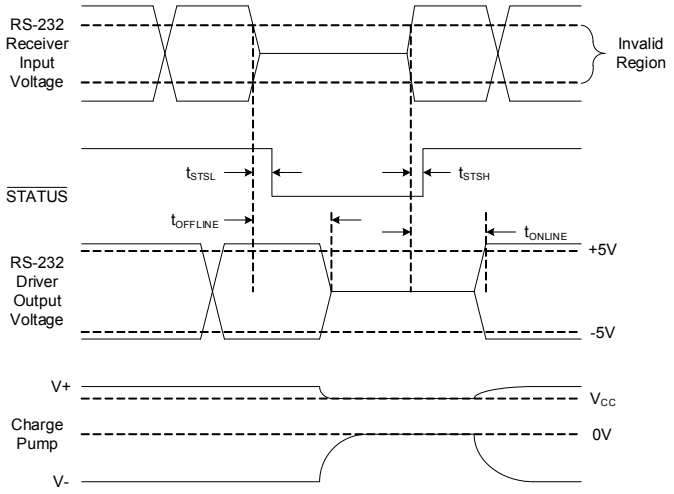

Figure 9: Auto On-Line® Timing

The $\overline{\text{STATUS}}$ pin goes to a logic LOW when the cable is disconnected or the external transmitters are disabled.

When the XR32330 drivers and internal charge pump are disabled, the supply current is reduced to 1µA. This can commonly occur in hand-held or portable applications where the RS-232 cable is disconnected or the RS-232 drivers of the connected peripheral are turned off.

The AUTO ON-LINE® mode can be disabled by the $\overline{\text{SHUTDOWN}}$ pin. If this pin is a logic LOW, the AUTO ON-LINE® function will not operate regardless of the logic state of the $\overline{\text{ONLINE}}$ pin. The truth table logic of the XR32330 driver and receiver outputs can be found in **Table 3 on page 11**.

The $\overline{\text{STATUS}}$ pin outputs a logic LOW signal if no valid RS-232 level is detected at either of the receiver inputs. This pin goes to a logic HIGH when the external transmitters are enabled and the cable is connected providing valid RS-232 voltage levels to the receiver input pins R1IN, R2IN and R3IN.

When the XR32330 is shut down, the charge pumps are turned off. V+ charge pump output decays to V_{CC}, the V- output decays to GND, see **Figure 9**. The decay time will depend on the size of capacitors used for the charge pump. Once in shutdown, the time required to exit the shut down state and have valid V+ and V- levels is typically 30µs.

For easy programming, the $\overline{\text{STATUS}}$ can be used to indicate DSR or a Ring Indicator signal. Tying $\overline{\text{ONLINE}}$ and $\overline{\text{SHUTDOWN}}$ together will bypass the AUTO ON-LINE® circuitry so this connection acts like a shutdown input pin.

Table 2: XR32330 Operation Truth Table

Valid RS-232 Level at Receiver Input	$\overline{\text{SHUTDOWN}}$	$\overline{\text{ONLINE}}$	TxOUT	RxOUT	$\overline{\text{STATUS}}$	Mode of Operation
Yes	L	X	High-Z	High-Z	H	Manually forced shutdown
No	L	X	High-Z	High-Z	L	Manually forced shutdown
Yes	H	L	Active	Active	H	Normal Operation (Auto On-Line® enabled)
No	H	L	High-Z	Active	L	Standby Operation due to Auto On-Line® circuitry
Yes	H	H	Active	Active	H	Normal Operation
No	H	H	Active	Active	L	Normal Operation

Table 3: XR32330 Driver and Receiver Truth Table

$\overline{\text{SHUTDOWN}}$	RxIN	RxOUT	TxIN	TxOUT
L	X	High-Z	X	High-Z
H	L	H	L	H
H	H	L	H	L

Mechanical Dimensions

24-Pin QFN (4x4mm)

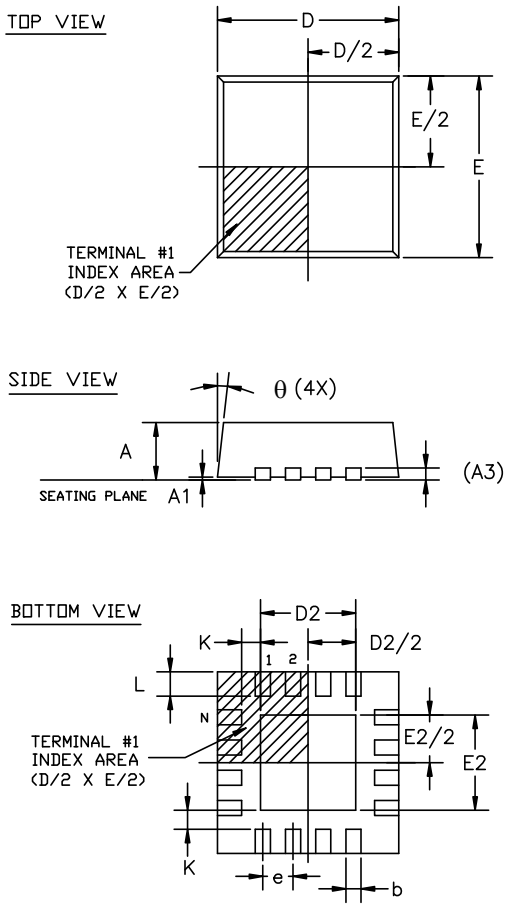

24LD 4x4 QFN (OPTION 3) JEDEC MO-220 Variation VGGD-6						
SYMBOLS	DIMENSIONS IN MM (Control Unit)			DIMENSIONS IN INCH (Reference Unit)		
	MIN	NOM	MAX	MIN	NOM	MAX
A	0.80	0.90	1.00	0.032	0.036	0.039
A1	0.00	0.02	0.05	0.000	0.001	0.002
A3	0.20 REF			0.008 REF		
b	0.18	0.25	0.30	0.007	0.010	0.012
D	4.00 BSC			0.157 BSC		
D2	2.65	2.70	2.75	0.104	0.106	0.108
E	4.00 BSC			0.157 BSC		
E2	2.65	2.70	2.75	0.104	0.106	0.118
e	0.50 BSC			0.020 BSC		
L	0.35	0.40	0.45	0.014	0.016	0.018
K	0.20	—	—	0.008	—	—
θ	0°	—	14°	0°	—	14°
N	24			24		
ND	6			6		
NE	6			6		

Ordering Information

Part Number	Package	Green	Operating Temperature Range	Packaging	Marking
XR32330EBER-F	24-pin QFN	Yes	-40°C to +85°C	Tray	32330EBER
XR32330EBERTR-F	24-pin QFN	Yes	-40°C to +85°C	Tape and Reel	32330EBER

Revision History

Revision	Date	Description
1A	November 2014	Initial release of datasheet. ECN 1446-08 Nov 2014
1B	June 2016	Update tape and reel part number.

For Further Assistance:

Email: serialtechsupport@exar.com

Exar Technical Documentation: http://www.exar.com/techdoc/

Exar Corporation Headquarters and Sales Offices
48720 Kato Road Tel: +1 (510) 668-7000
Fremont, CA 95438 - USA Fax: +1 (510) 668-7001

NOTICE
EXAR Corporation reserves the right to make changes to the products contained in this publication in order to improve design, performance or reliability. EXAR Corporation assumes no responsibility for the use of any circuits described herein, conveys no license under any patent or other right, and makes no representation that the circuits are free of patent infringement. Charts and schedules contained herein are only for illustration purposes and may vary depending upon a user's specific application. While the information in this publication has been carefully checked; no responsibility, however, is assumed for inaccuracies.

EXAR Corporation does not recommend the use of any of its products in life support applications where the failure or malfunction of the product can reasonably be expected to cause failure of the life support system or to significantly affect its safety or effectiveness. Products are not authorized for use in such applications unless EXAR Corporation receives, in writing, assurances to its satisfaction that: (a) the risk of injury or damage has been minimized; (b) the user assumes all such risks; (c) potential liability of EXAR Corporation is adequately protected under the circumstances.

Reproduction, in part or whole, without the prior written consent of EXAR Corporation is prohibited.

Mouser Electronics

Authorized Distributor

Click to View Pricing, Inventory, Delivery & Lifecycle Information:

MaxLinear:
XR32330EBERTR-F