SOL-ARK 12K INSTALL GUIDE & OWNER'S MANUAL 1-55

TABLE OF CONTENTS	1
DISCLAIMER	2
COMPONENT GUIDE	3
SYSTEM PLACEMENT	4
TRANSFER SWITCH	5
MOUNTING	6
BATTERY WIRING	7-8
SOLAR PANEL WIRING	9-10
BACKUP GAS GENERATOR SETUP & SENSOR PLACEMENT	11
TESTING	11-12
BATTERY SETTINGS AND WIFI SETUP	13-20
EMP SUPPRESSOR INSTALLATION	21
RAPID SHUTDOWN DIAGRAMS	22
SPECIFICATIONS	23
OFF GRID TIPS & GRID TIE / NO BATT TIPS	24
POWERING ON THE SYSTEM / INDICATOR LEDS	25
SELECTING POWER MODES / SENSORS	25-26
BATTERY SETTING & LIMITER SENSOR AUTO-SETUP	27
SCREENS (GUI MAP PAGE 34)	28-34
BATTERY CHARGE/DISCHARGE REFERENCE	35
TROUBLESHOOTING GUIDE / ERROR CODES	36-37
COMMON BATTERY APPLICATION NOTE	38-39
WIRE GAUGE GUIDE	40
PARALLEL SYSTEM APPLICATION NOTE / COMPATIBILITY REFERENCE	41-42
MODBUS/RS485 PIN OUT AND REGISTERS + TORQUE VALUES	43
SYSTEM WIRE DIAGRAMS	44-52
INSTALL TESTING CHECKLIST	53-54
WARRANTY	55

CONTACT US

PHONE	1-972-575-8875 X2
EMAIL	SUPPORT@SOL-ARK.COM
WEBSITE	WWW.SOL-ARK.COM

Disclaimer

UNLESS SPECIFICALLY AGREED TO IN WRITING, SOL-ARK:

(a) MAKES NO WARRANTY AS TO THE ACCURACY, SUFFICIENCY OR SUITABILITY OF ANY TECHNICAL OR OTHER INFORMATION PROVIDED IN ITS MANUALS OR OTHER DOCUMENTATION.

(b) ASSUMES NO RESPONSIBILITY OR LIABILITY FOR LOSS OR DAMAGE, WHETHER DIRECT, INDIRECT, CONSEQUENTIAL OR INCIDENTAL, WHICH MIGHT ARISE OUT OF THE USE OF SUCH INFORMATION. THE USE OF ANY SUCH INFORMATION WILL BE ENTIRELY AT THE USER'S RISK.

Sol-Ark cannot be responsible for system failure, damages, or injury resulting from improper installation of their products.

Information included in this manual is subject to change without notice.

Sol-Ark 12K inverter should be installed by qualified persons only.



Do Not Mount Outdoors

Do Not Expose to Moisture

System Must Have Ground

System Must Have Neutral

Solar PV+/PV- Are Ungrounded

Ground Must be Bonded to Neutral Once in Home

1. Inspect Shipment

a. Compare the package condition to the condition of the package in the photo we sent you before it left our facility. **You must note any damage due to shipping with delivery driver before accepting the package otherwise the shipping company will deny any claim.**

b. If damaged, contact us immediately at 972-575-8875 Ext. 3

2. Component Guide

a. Solar Panel MC4 tool: To disconnect solar panels (if purchased)
b. Allen Key: for opening the user area of the system
c. WIFI Plug: For software updates and remote monitoring (use screws to hold in!)
d. Limiter Sensors: for “Limited-to-Home Mode” (larger ones are optional)
e. French Cleat: For wall mounting the Sol-Ark 12K
f. Battery Temperature Sensor: For voltage adjustment
g. Battery Cables (If purchased)
h. Solar Panel Wire 100’ (If purchased)
i. Solar Panel Jumper wires 25’ (If purchased)
j. Y-Connectors (If purchased)
k. Battery Toroids: For EMI reduction

3. Component Distance Guide



WIRE RUN LENGTH: SEE DIAGRAM FOR WIRE GAUGE (AWG) RECOMMENDATIONS, PAGE 43 FOR COMPLETE DETAIL

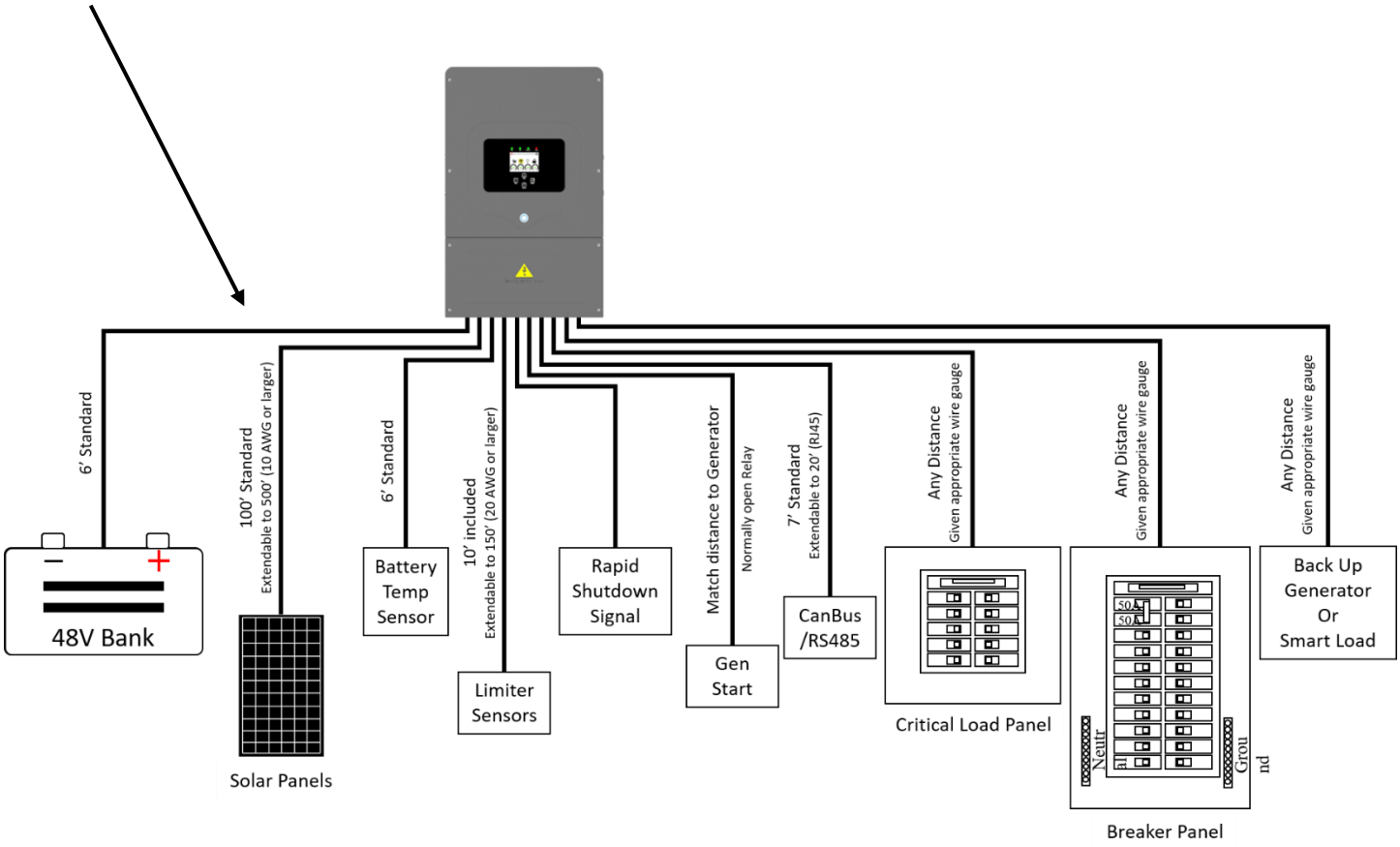

IF PROGRAMMED TO SMART LOAD
DO NOT CONNECT GENERATOR TO GEN PORT

4. Decide Critical Backup Circuits

a. If using a 10-circuit switch: decide which 10 circuits will be on backup power continuously. These circuits **must use non-GFI breakers** to work with the transfer switch. You can replace a GFI breaker with a normal breaker, installing GFI outlets instead (or you can move GFI breaker into 10-circuit SW). If applicable, low load circuits can be combined.

b. **Important: Make sure to keep within inverter amperage limits** (per inverter):
On Grid = 50A continuous (pass-through)
Off Grid = 33A continuous/83A peak

c. Verify each load circuit by measuring typical and max Amps with a clip-on Amp meter. Amps x 120V = Watts

d. **If you have Arc-Fault / GFI breakers in your main panel we recommend that you install a subpanel for your backup loads, not a multi-circuit transfer switch.**

e. **If using multiple 12K units in parallel consider powering the main breaker panel directly as shown on page 15. (Example: 3 systems will have a total of 150A of pass through @ 240V)**

5. Mount Multi-Circuit Transfer Switch (Not valid for Arc-Fault/GFI breakers) OR Critical Loads Panel

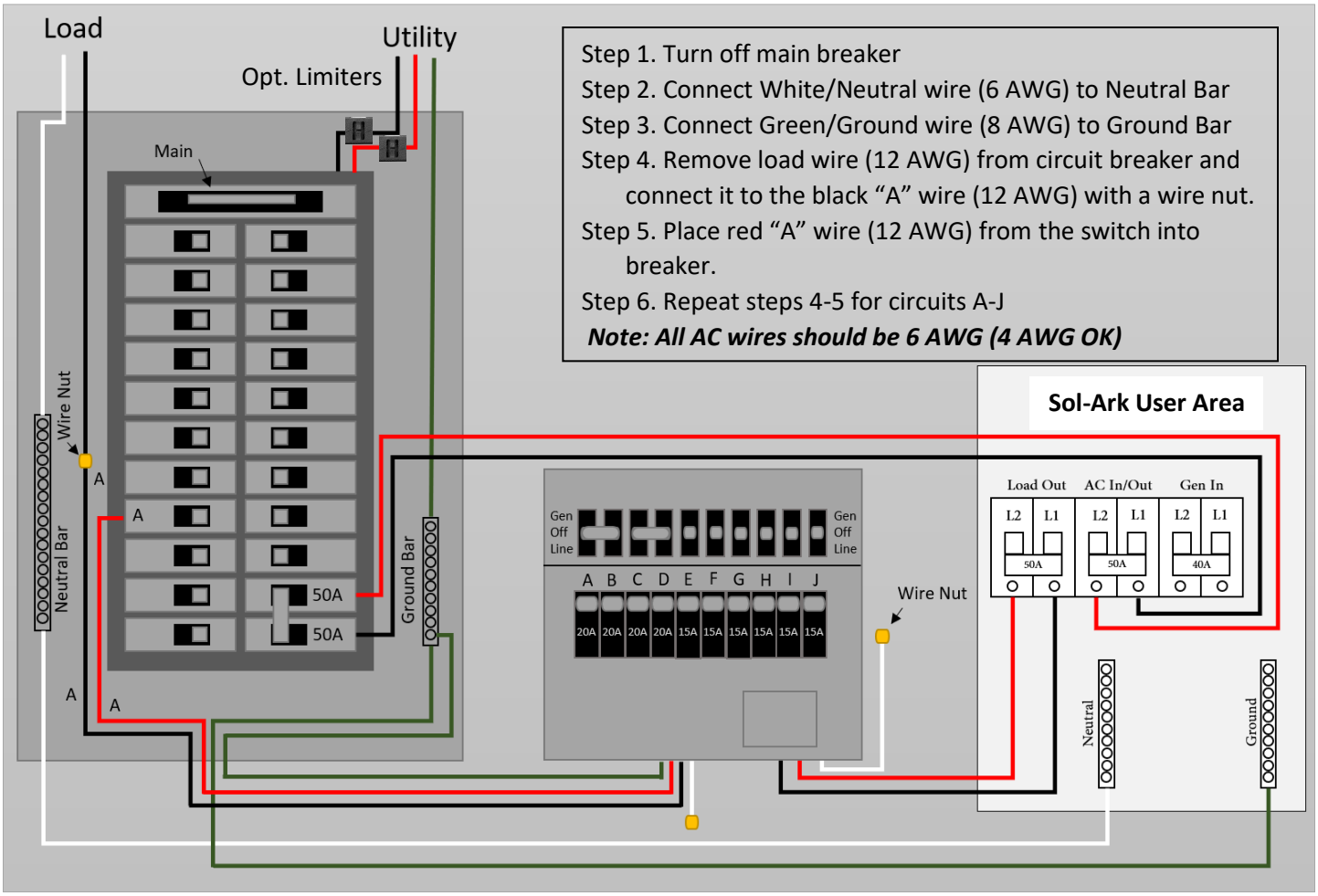

Important notes:

When the transfer switch is in the "Gen" position, this means the circuit is being powered by the Sol-Ark (which can use Grid/Solar/Battery/Generator automatically).

When in the "Line" position, the transfer switch is being powered by the grid (Sol-Ark can be removed).

The transfer switch setup is complete once all the switches are set to "Gen" position.
The Sol-Ark will take care of the rest.

If you are not installing a transfer switch (Off Grid or have a 50A sub-load panel), you can wire the "Load" output of the Sol-Ark 12K directly to a Main Lug breakers sub-panel rated for at least 50A.

Please refer to diagrams section for complete wire diagram

Strain Reliefs must be used for all wires going in/out of the Sol-Ark 12K user area

Ground and Neutral must be wired as shown above, or damage can occur.

Conduit (or double insulated wire) must be used for the AC Wires going to and from the Sol-Ark.

DO NOT CONNECT THE GRID TO THE LOAD OUTPUT BREAKER

6. **Single System Installs: Install Double Pole 50A breaker in Main Panel for Grid In/Out**
    a. It is best practice to install at the opposite end of the bus bar from the main breaker (Usually this is the bottom of the breaker panel as seen on page 5).
7. **Multi System Installs: Line side tap recommended for grid connection point**
    a. Please see page 15 for an example diagram.
8. **Mount Sol-Ark 12K**
    a. Find a suitable location for the system(s), keeping in mind the dimensions in Fig. 1 below.
    b. System must be protected from moisture and extreme heat. (**Do not mount outdoors or in attic OR WARRANTY WILL BE VOID AND DAMAGE WILL LIKELY OCCUR**)
    c. The system weighs 74lbs (34kg), be sure to attach it securely to the wall. You may need to affix a mounting board to your wall first using 6-8 screws into studs.
    d. Then use 2-3 screws (appropriate in length and type for your mounting surface) to mount the French Cleat to the board/wall (washers recommended).
    e. Mount the Sol-Ark on the installed cleat making sure that it sits properly and is level.
    f. Add 2 screws in bottom mounts.

Fig. 1

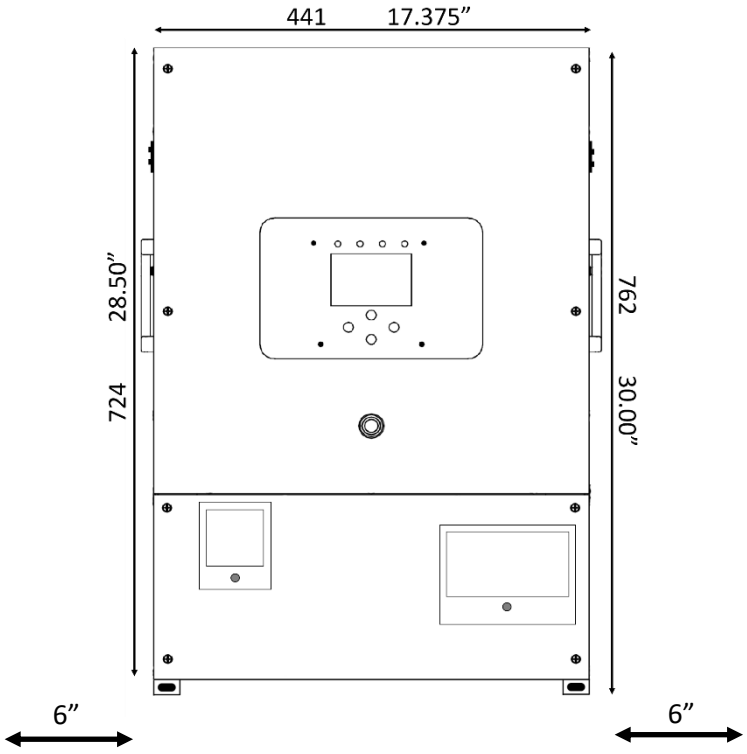

6” minimum clearance (12” if next to another system)

Sensor Pin Out

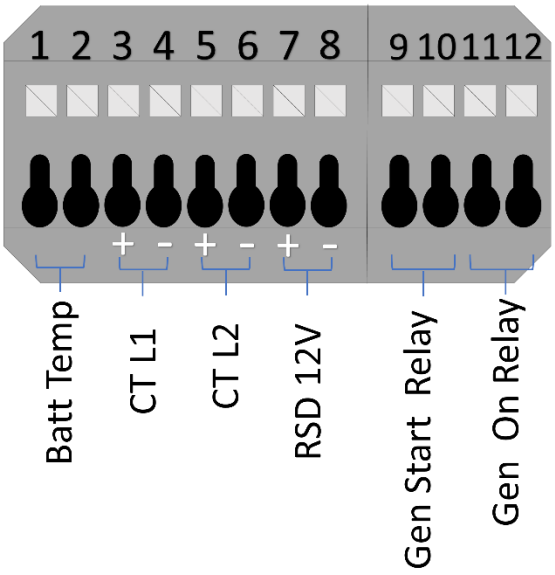

Batt Temp: Battery Temperature Sensor has no polarity and is needed for voltage correction when using lead acid batteries.

CT1 & CT2: Current transformers used for limited to home mode and peak shaving

RSD 12V: 12V power supply for RSD transmitters such as TIGO and Midnite

Gen Start Relay: Two wire start for generators, simple open or closed relay

Gen On Relay: Not currently used

9. Connect Batteries (Sol-Ark should be POWERED "OFF")

a. Connect the batteries to the Sol-Ark 12K as shown in the diagrams **Fig. B** below:

b. Fig. A: Install included ferrites **(part k. on pg. 3)** on the battery input cables. Slide the ferrite over the battery cables so that both cables are within the toroid (as shown in Fig. A).

c. When connecting batteries make sure the built-in battery disconnect is in the off position while the batteries are connected, or arcing will occur.

d. **Multi-system installs:**

i. All systems in parallel are connected to the same battery bank, with each system having its own battery cables to connect to the same large battery bank. **<u>Do not use separate battery banks for parallel systems.</u>**

<u>Fig. A</u>



<u>Fig. B</u>

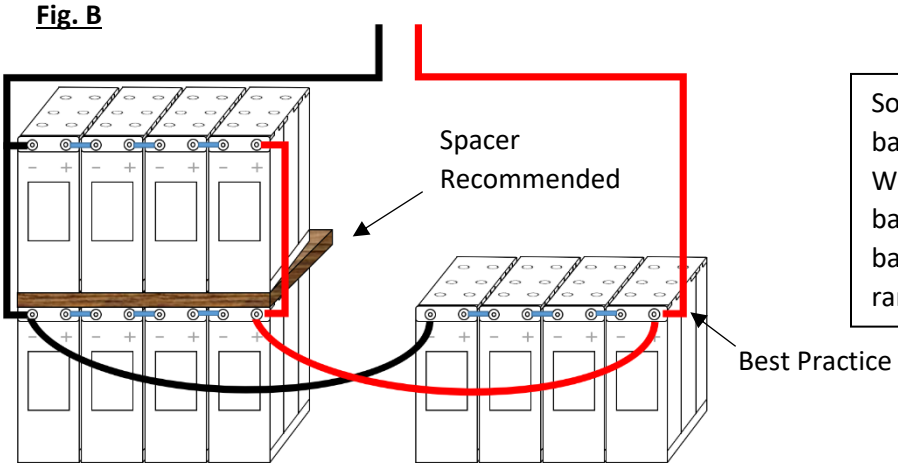

Sol-Ark 12K is a **<u>48V</u>** system. Do not wire the battery bank to any other nominal voltage. When using 12V batteries do not exceed 4 batteries in series. When using other battery chemistries, stay within the voltage range: Min 43V-Max 63V

<u>Note: PCC batteries are stackable</u>

<u>WARNING! Do not stack more than 2 banks high!</u>

<u>Fig. C</u>

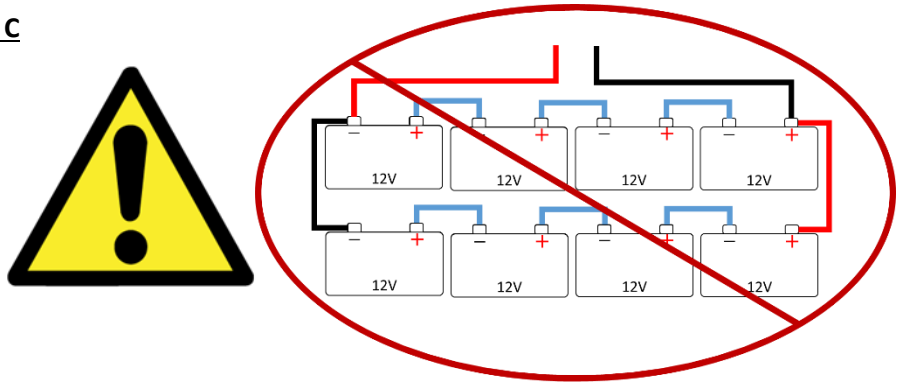

Do NOT reverse polarity of batteries! Damage will occur!

Note: Before powering up Multi-System installs please see Multi-System app note

12V Battery Wiring Examples

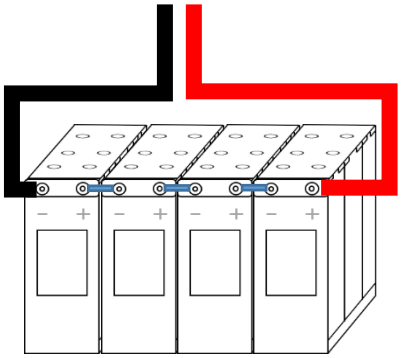

4

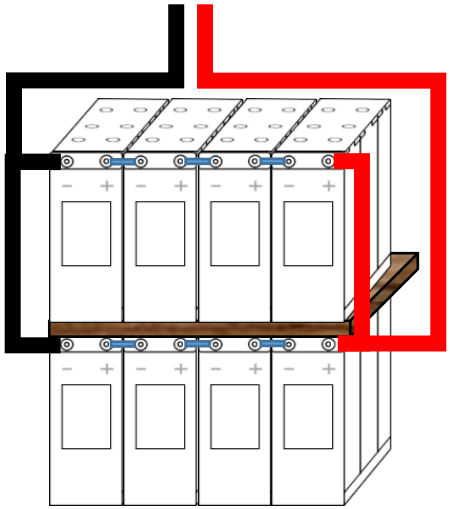

8

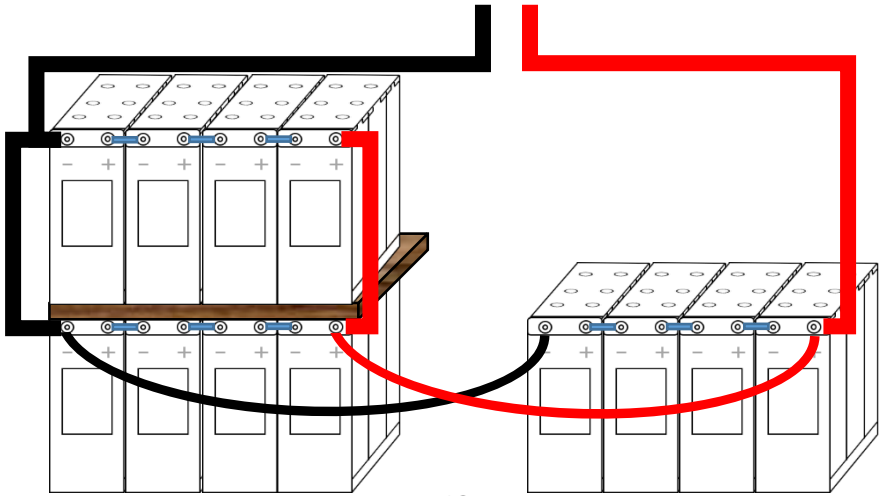

12

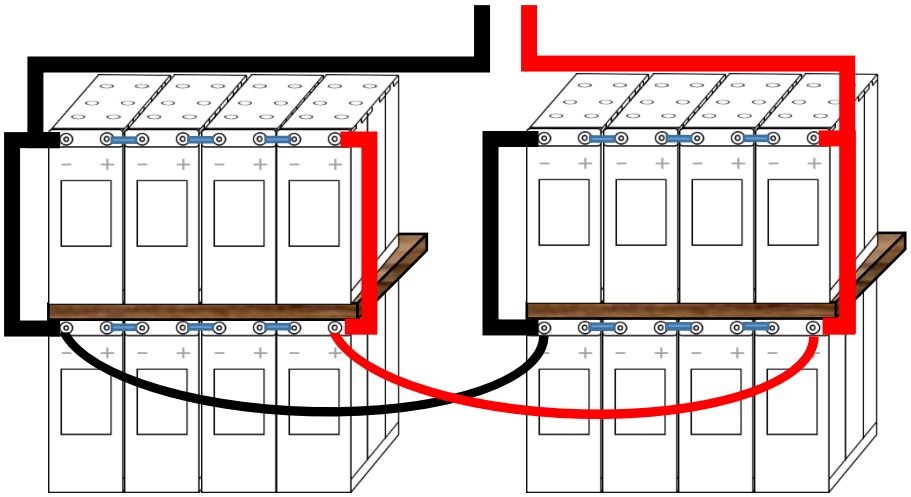

16

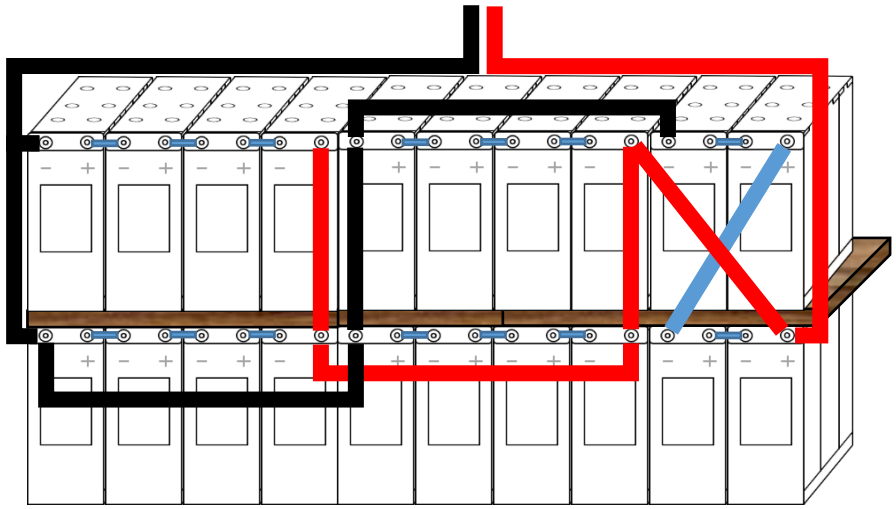

20

10. Solar Panel Install

1. Sol-Ark 12K has 2 separate pairs of solar panel inputs. **(Dual MPPT)**

3. Max PV input:

13,000W(+/- 5%) per system (6,500W per MPPT) PV = 500Voc Max

Max Isc input per MPPT: 25A (self-limiting to 20A @450Voc/300Vmp or 18A @ 500Voc/400Vmp)

Note: Damage will occur if PV Voc > 550V.

4. Connect the strings of solar panels to the system as shown on pages 9/10.

5. Parallel strings per MPPT must be the same voltage, PV1A/B must be the same voltage if both are used (see Fig. E). It is OK if panels for panels on the same MPPT to face different directions.

6. Panel frame grounding can be done to any ground in the home via 12AWG wire. Mounts usually bond frames together, so only 1 ground wire is needed.

Note: Max Panels in Series (Rule of Thumb, always verify the string characteristics are within spec)**:**

60 Cell: 10 **72 Cell: 9** **96 Cell: 6**

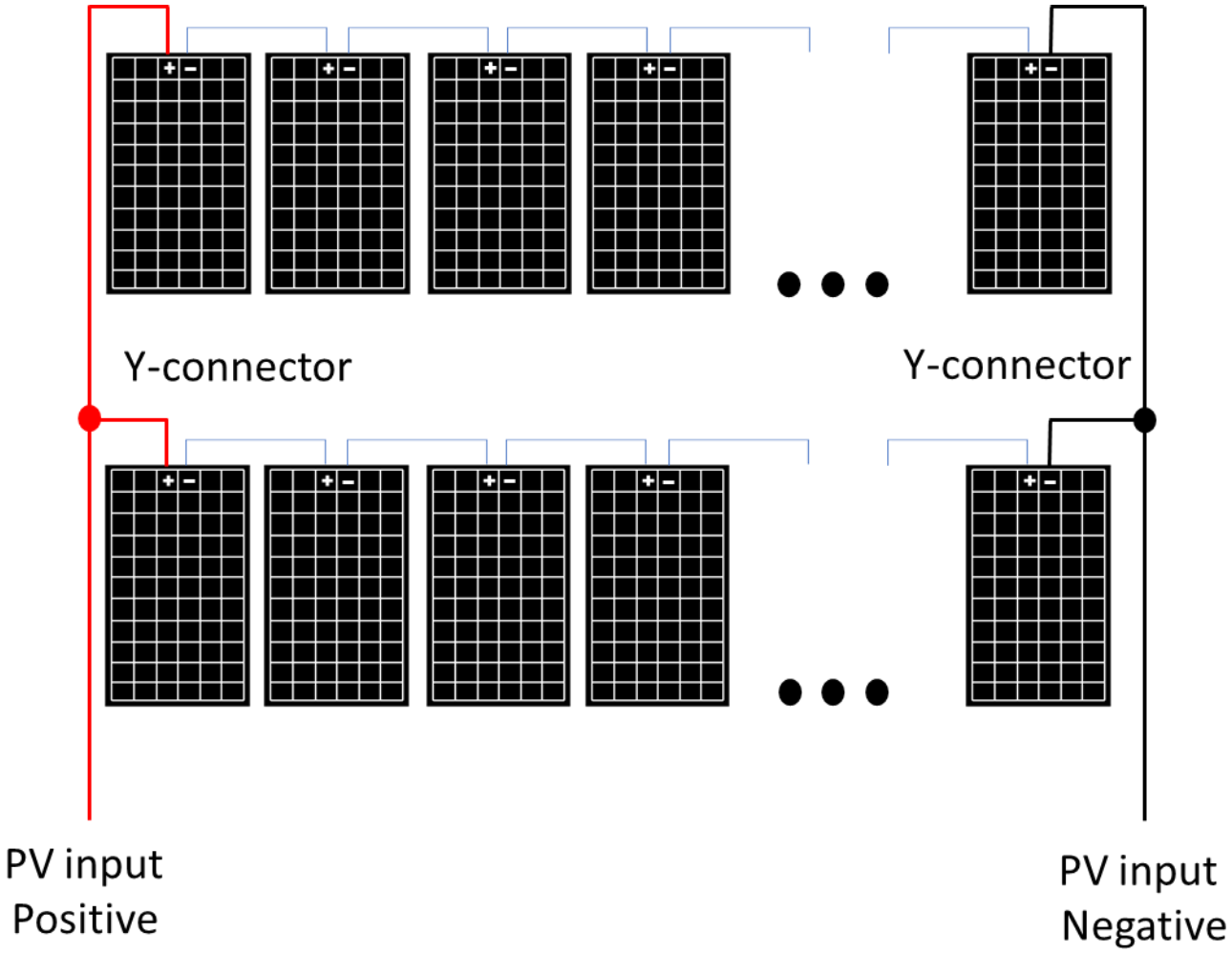

If using Y-Connectors: (**Running two strings in parallel, totaling 20A (self-limiting)** Note: separate wires can be used per string, and string minimum is usually 5 panels or 175V)

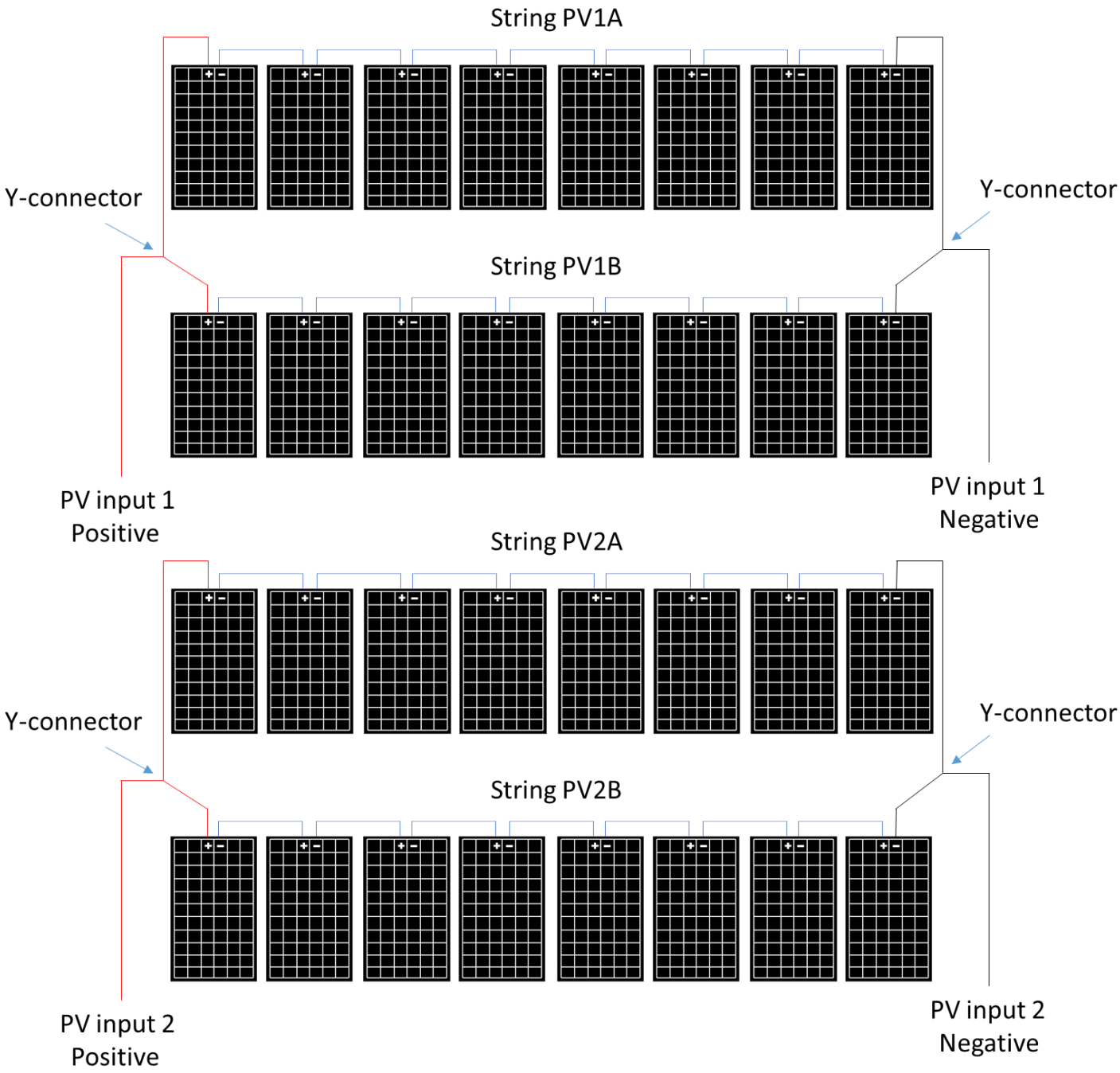

11. Connecting a Portable Backup Generator (240V/208V only)

a. Generators smaller than 10kW - See diagram 1
   i. Connect the generator output to the "Gen" input breaker in the Sol-Ark 12K user panel.
   ii. Only 240V/208V generators are supported.
   iii. If **Off-Grid,** connect the generator output to the "Grid" input in the Sol-Ark and select the "GEN connected to Grid input" option in the Sell Control tab of the Grid Setup Menu.
      1. Home Screen → Gear Icon → Grid Setup → Sell Control

b. Standby Generators >10kW - See diagram 2
   i. If **Off-Grid**, you may connect the generator output directly to the "Grid" input on the Sol-Ark 12K. The Sol-Ark 12K will perceive the generator as if it were the grid. You will need to select the "GEN connected to Grid input" option in the Sell Control tab of the Grid Setup Menu.
      1. Home Screen → Gear Icon → Grid Setup → Sell Control
   ii. Being **Off-Grid**, you will have "Grid Sell" off and will not need current limiting sensors.
   iii. Under "Grid Setup" do the following:
      1. Select "Limited to Load"
      2. Select "General Standard"
      3. Increase Grid frequency range: 55-65Hz
   iv. If using a large generator with a whole home transfer switch, we suggest not using the "Gen" input breakers in the Sol-Ark. Instead, use the existing home wiring to distribute the generator's power (through your existing "Gen" transfer switch, usually to the main panel in the home or building).

12. Sensor and Accessory Placement

Fig. F

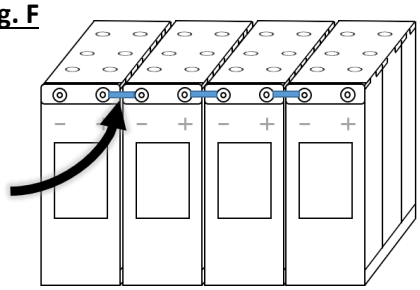

a. Limiter Sensors (CT Sensors)
   i. Install on incoming electrical service wires on L1 and L2 (see diagram pg. 11). Required if in Limited To Home Mode (meter zero) and Peak Shaving. Please check your wire size before ordering to ensure the sensors will fit.

b. Battery Temp Sensor
   i. Place between batteries **(See Fig. F).** Note: Temp sensor is not required for lithium batteries. This sensor has no polarity when connecting to the sensor input of the Sol-Ark.

c. CanBus & RS485
   i. In order to connect batteries to the Sol-Ark 12K via RJ45, you will need to splice the end that connects to the Sol-Ark 12K. Use the middle two conductors.
   ii. RS485 is SunSpec draft 4 (will not work with draft 3)

d. Gen Start Signal (Two-Wire)
   i. Normally open relay that closes when the Gen Start state is active
   ii. If your generator only starts with the loss of 120/240V to the generator, we suggest using a DPST relay to the output of the inverter.

e. PV Rapid Shutdown Signal
   i. 12v signal/200mA power is present until the Sol-Ark is shut down with the front button

f. WI-FI Antenna
   i. Needed for remote monitoring and/or software updates.

13. Testing and Powering up Sol-Ark 12K

a. Check Voltage of each PV input circuit
   i. Should be no higher than 500Vdc open circuit temperature corrected.
   ii. **DO NOT connect PV+ OR PV- to GND**.
   iii. Good to verify polarity (if polarity is backwards the Sol-Ark will show a Voltage of 0V).

b. Check Grid Input Voltage (voltages shown are for North America)

i. Ensure 120Vac L1 to Neutral and L2 to Neutral.
ii. Ensure 240Vac L1 and L2.
iii. Check Neutral and Ground are ~0V AC.

c. Check Battery voltage
i. Turn on battery switch (if using a Lithium battery).
ii. Turn on the built-in battery disconnect in the user area of the Sol-Ark.
iii. Voltage should be 45Vdc-57Vdc.

d. If all checks out, Turn on Breakers for Grid and Load, Turn PV Disconnect knob to "On"
i. Note: (If PV is backwards: Sol-Ark will show a voltage of 0 for PV)

e. System will boot up with power from PV, Grid, or ON/Off Batt.

f. Press the ON/OFF Button on the front, light should come on.

g. If you installed limit sensors for Limited To Home selling mode, it is critical you verify the proper sensor placement and direction. (Auto learn function avoids this section if not 208V, function can be found under the advanced tab of the basic setup menu in settings).
i. Using AC multi-meter, verify L1 voltage on AC in/out is 0Vac with main L1 connection in panel. Same for L2.
ii. To verify sensor connections to Sol-Ark, try removing one sensor from the main L1 connection. The power should drop to 0W.
iii. To verify proper sensor direction, with any loads in the home, the HM: +watts will be positive. If you turn on solar panels and turn enable Grid Sell, you should see HM: -watts if you are producing more power than the loads are consuming. And if you turn on limited power to Home mode, then HM: ~0 watts to zero the meter (system matches the loads to within 99%).

14. Basic Setup

a. Display: Auto dim must be enabled for LCD screen to be covered by warranty. Color LCD screens dim if left on continuously for years.

b. Time: Set date and time for the system

15. Programming Battery Settings

a. Battery Capacity
i. This allows Sol-Ark to know the size of the battery bank. The system is also self-learning as batteries age.
ii. Main Menu → System Settings → Battery Setup → Batt → Batt Capacity

b. Use Battery Voltage or % Charged
i. Use whatever you are comfortable with. Most installers prefer voltage, while most homeowners prefer % Charged. (Note: if Lithium BMS is selected but not present, Sol-Ark will force Voltage mode)

c. Battery Charge & Discharge Current
i. For a list of settings for commonly used batteries see the application note section of this manual.
ii. For AGM and Flooded, we recommend Ah battery size x 20% = Charge/Discharge amps
iii. For Lithium, we recommend Ah battery size x 50% = Charge/Discharge amps
iv. For Gel, follow manufacturer's instructions.
v. When Off Grid, The Sol-Ark will shut down if Max discharge current is exceeded for 10 seconds.

d. Battery Type
i. Navigate to the charge menu and set the values appropriate to your battery chemistry. The owner's manual is good reference for lead acid batteries.
ii. Main Menu → System Settings → Battery Setup → Charge

e. Supported Battery Chemistries (48V configuration required for all chemistries)
    i. Lead Acid
        - AGM, Gel, Wet
    ii. Lithium
        - NMC, LiPo4
    iii. NiFe (Note: must use a 37 series cell configuration, 44.4V Nominal)
        - Set Absorb and Equalization to 61.0V, 3 hours, and days = 1 (every day). Float = 53.7V

Battery Type	**Absorption Stage**	**Float Stage**	**Equalize Stage** (every 30 days 3hr)
AGM (or PCC)	14.4v (**57.6v**)	13.5v (**53.6v**)	14.4v (**57.6v**)
Gel	14.1v (**56.4v**)	13.5v (**54.0v**)	
Wet	14.7v **(59.0v)**	13.7v **(55.0V)**	14.7v **(59.0v)**
Lithium	14.1v (**54.6v**)	13.2v (**54.3v**)	14.1v (**54.6v**)

Default

f. Battery Discharge
    i. Allows the user to define the depth of discharge the system will allow before using the grid/generator to the charge the battery bank. Solar is always the priority in charging the battery bank.
    ii. Main Menu → System Settings → Battery Setup → Discharge

16. Grid Setup

a. Grid Sell: maximum watts sold to grid
b. Limited To Home: Limits power produced by the system to match the demand of the home
c. Limited To Load: Limits power produced by the system to match the demand of connected loads
d. Time of Use: Use battery power to support the programmed mode at selectable times/watts/DoD

17. Remote Monitoring Setup

a. WIFI (Via Cell Phone or computer)
    i. Plug WIFI dongle into Sol-Ark
    ii. Using your device look for WIFI networks and select the one that matches the S/N number on your dongle or the one that starts with “EAP” or “E470-####-####”
        - Password: 12345678
    iii. Once Connected to the Dongle
        - Follow this instruction on the following pages
    iv. Note: Sol-Ark 12K is not compatible with wired ethernet connections for monitoring or updates, you must use the included WIFI dongle.

Once Setup is complete, Dongle will have a solid green LED and a solid Red light

WiFi Setup Instructions With Phone App

1. Download the App:

iPhone: https://apps.apple.com/us/app/powerview-es/id1460941008

Android: https://play.google.com/store/apps/details?id=com.elinter.app.ups

2. Open App

3. Create an Account (Installers Please See Note)

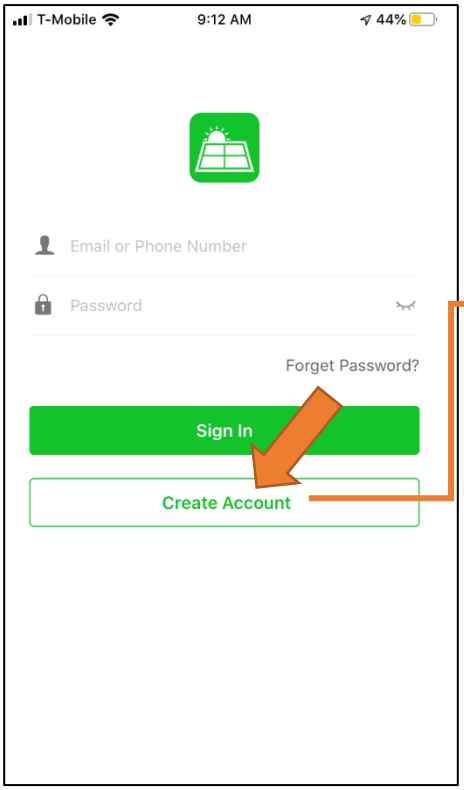

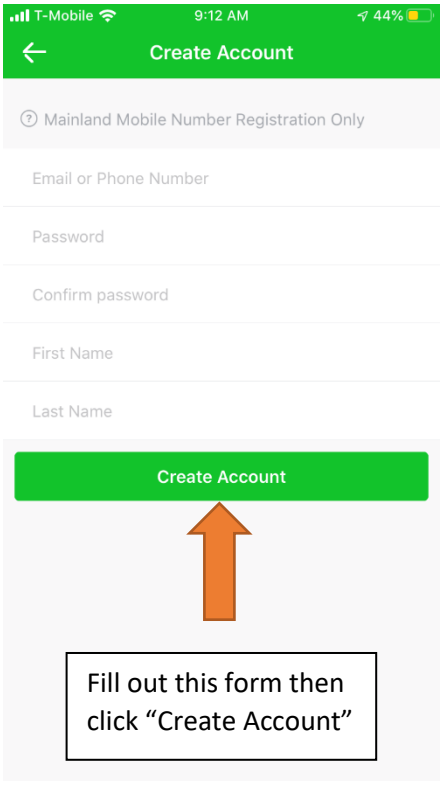

Fill out this form then click “Create Account”

Attention Installers

If you plan to add an install to your installer account for monitoring multiple installs, you must first make your installer account. Then before the customer makes their account, add the WiFi dongle to your account. Each customer must have their own account and each Sol-Ark must have its own Plant in the software.

4. Sign in

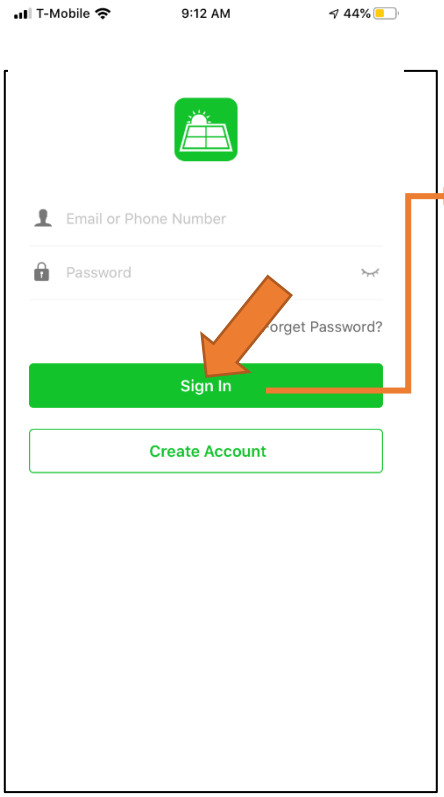

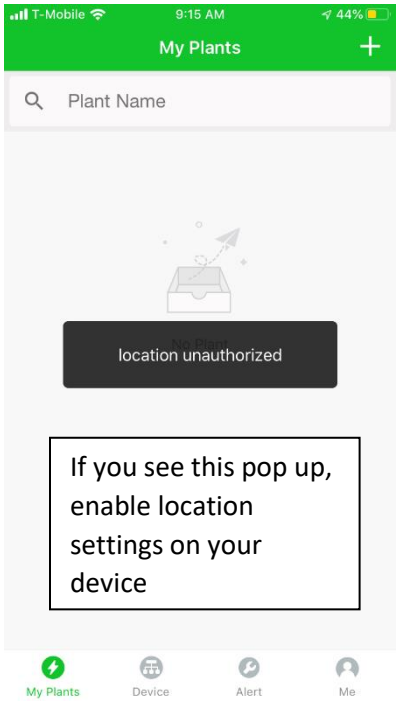

If you see this pop up, enable location settings on your device

5. Add a Plant

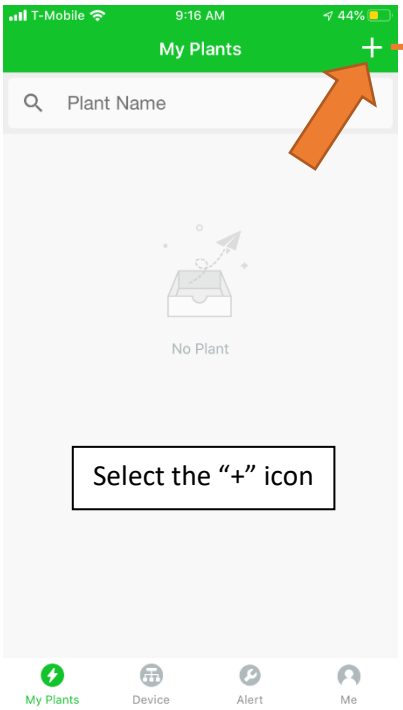

Select the "+" icon



Scan the QR code on the dongle

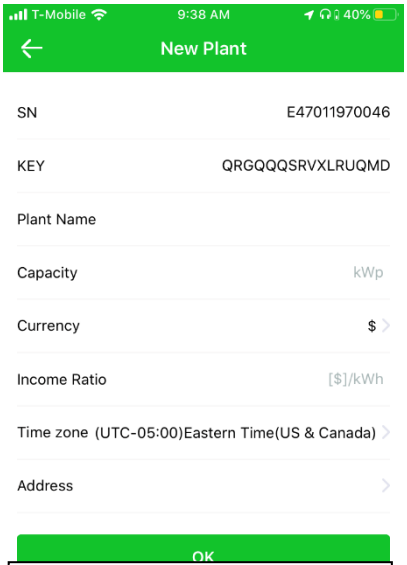

Pick a "Plant Name", input a capacity for your install (PV), and an income ratio (this is how much you save by producing solar power)

6. Connect your system to the internet

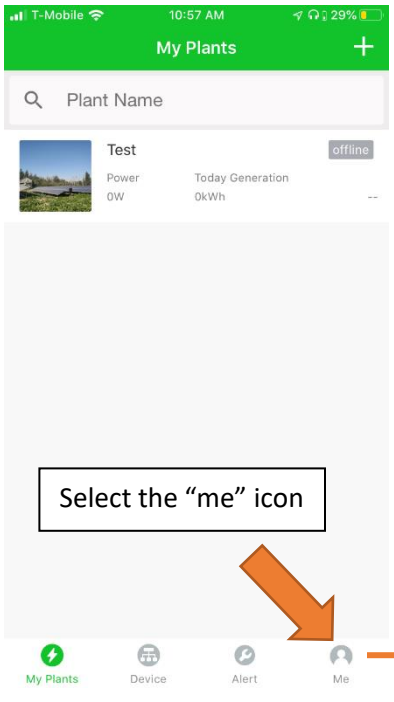

Select the “me” icon

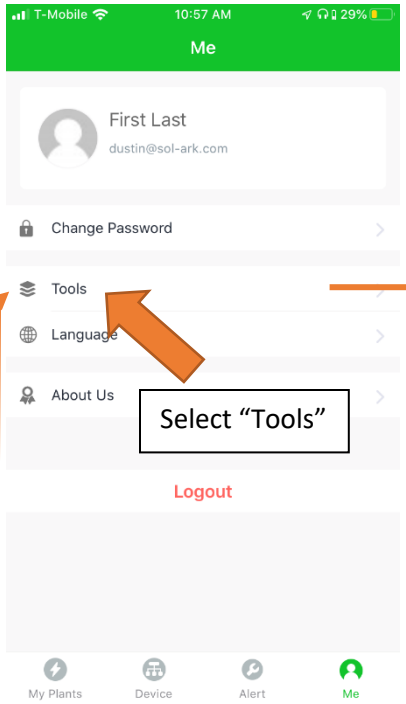

Select “Tools”

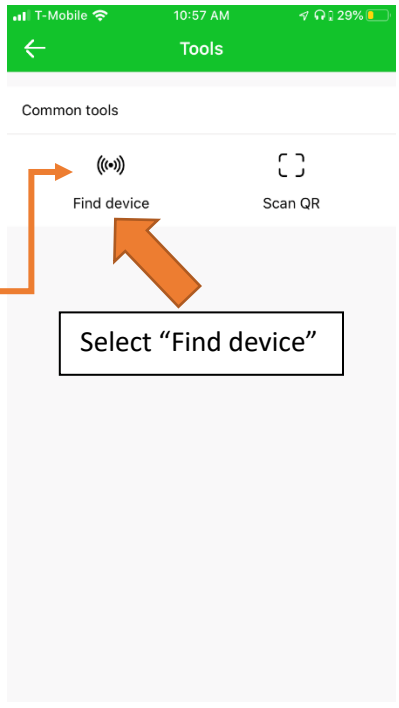

Select “Find device”

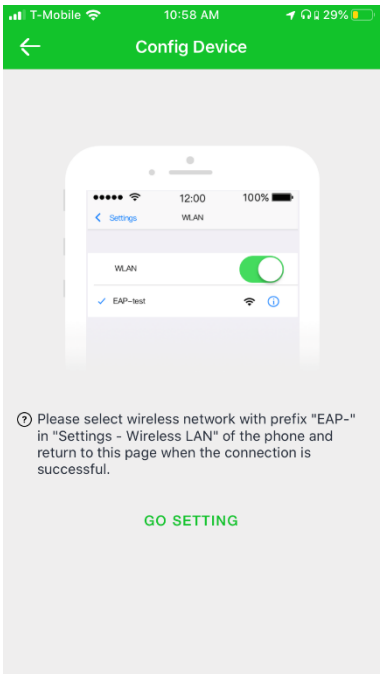

Once you see this screen go to your devices WiFi setting and connect to the WiFi network that starts with:

EAP-#####

Password: “12345678”

Once connected return to the app



Select “Pls_select”

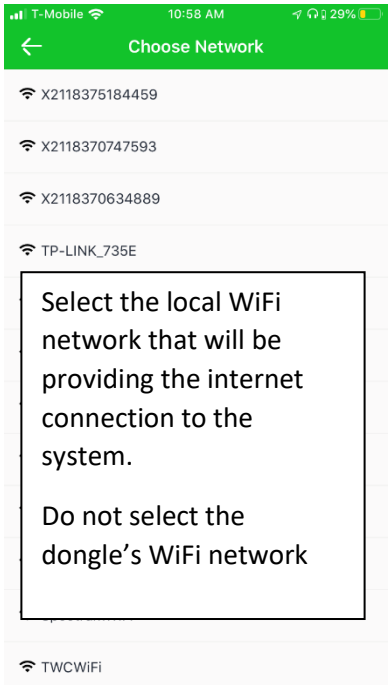

Select the local WiFi network that will be providing the internet connection to the system.

Do not select the dongle's WiFi network

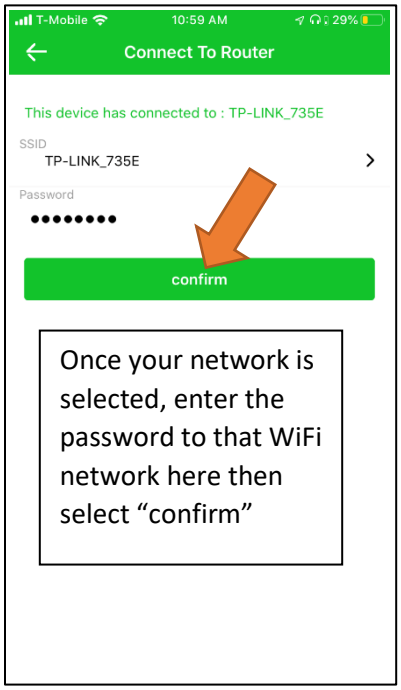

Once your network is selected, enter the password to that WiFi network here then select "confirm"



If successful, the dongle will have one red and one green light. It takes about 60sec for the lights to turn on after setup.

7. Start Monitoring

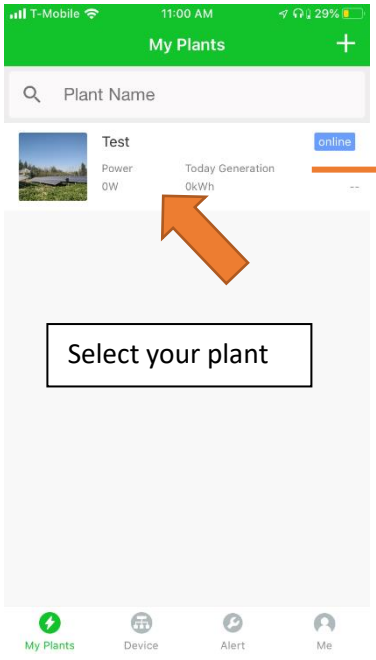

Select your plant

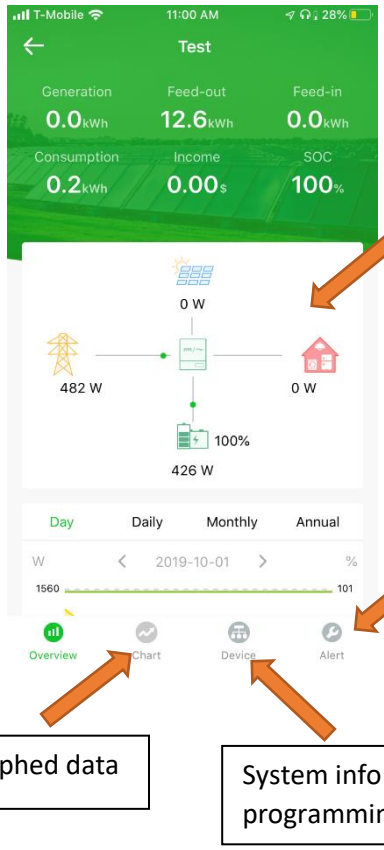

This screen is the real time view

Alarms

Graphed data

System info and programming

IP Address Setup Instructions

Please Note that this method only achieves internet connectivity, for registration and account management please use the app and/or www.esem.cc

1. **Connect to the Dongle:**
   a. Settings → Wi-Fi → Select the Network with E##### (The last 5 digits of your SN number)

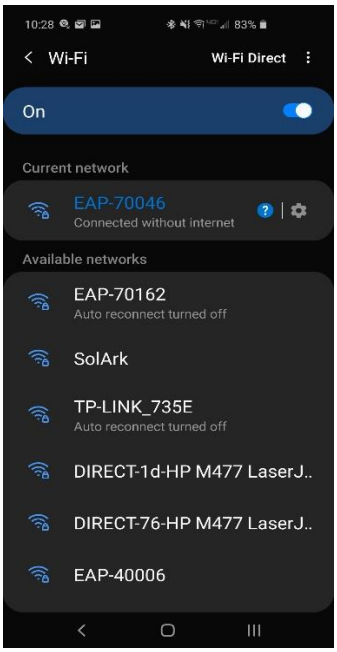



Password: 12345678

*Disclaimer: The wi-fi dongle does not have internet, you still need to be connected to the dongle for this process.

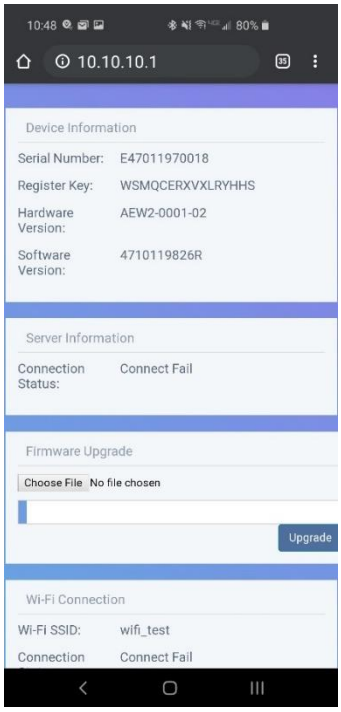

1. **Login to Web Portal using any search browser:**
   a. Open Google or Safari → type in the search bar 10.10.10.1

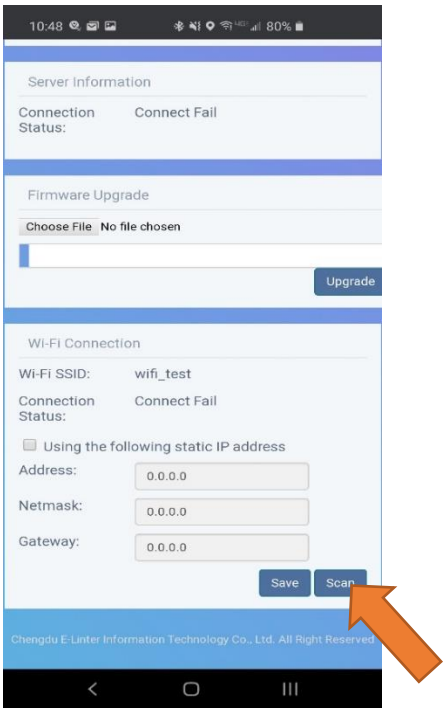

2. Scroll Down until you see Wi-Fi Connection:

b. Once you see the Wi-Fi connection settings, select the Scan button to search local area networks.



3. You will see several networks; choose the home network (Not the dongle's network).

*Disclaimer: Connecting the dongle via the IP address only connects the dongle to the internet.

***YOU MUST STILL CREATE AN ACCOUT VIA THE POWER VIEW APP.**

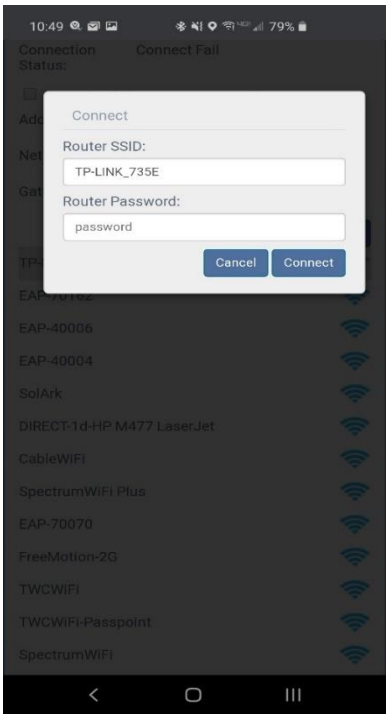

4. **Enter in the Password for your Network and select Ok**
    c. Select Network → Enter in Password → Select Connect

5. **Once Password is Entered, tap the "Save" button underneath the Wi-Fi Information**



If Successful you should get a Red and Green light on the Dongle showing that it is connected.



E.M.P Systems only:

Suppressor installation

- If your system was purchased with Lightning / EMP Hardening, the vast majority of protection is in the Sol-Ark. However, you also have EMP suppressors that get installed on the power cords of appliances that are connected to the transfer switch. Although not critical, it is recommended they be installed as close as possible to the appliance.
- You also have EMP suppressors that get installed on both solar panel wires with a zip tie. Closer to the panel is better. If you purchased the panels from us, we already installed >150kV/m protection inside the solar panels.





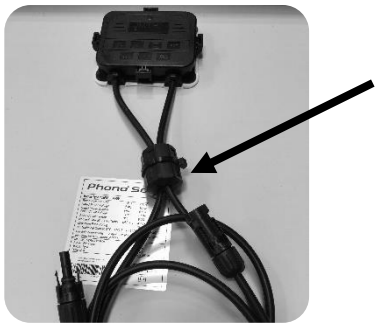

If using panels not from Sol-Ark

Rapid Shutdown Hardware Diagram (Midnight RSD per PV string)

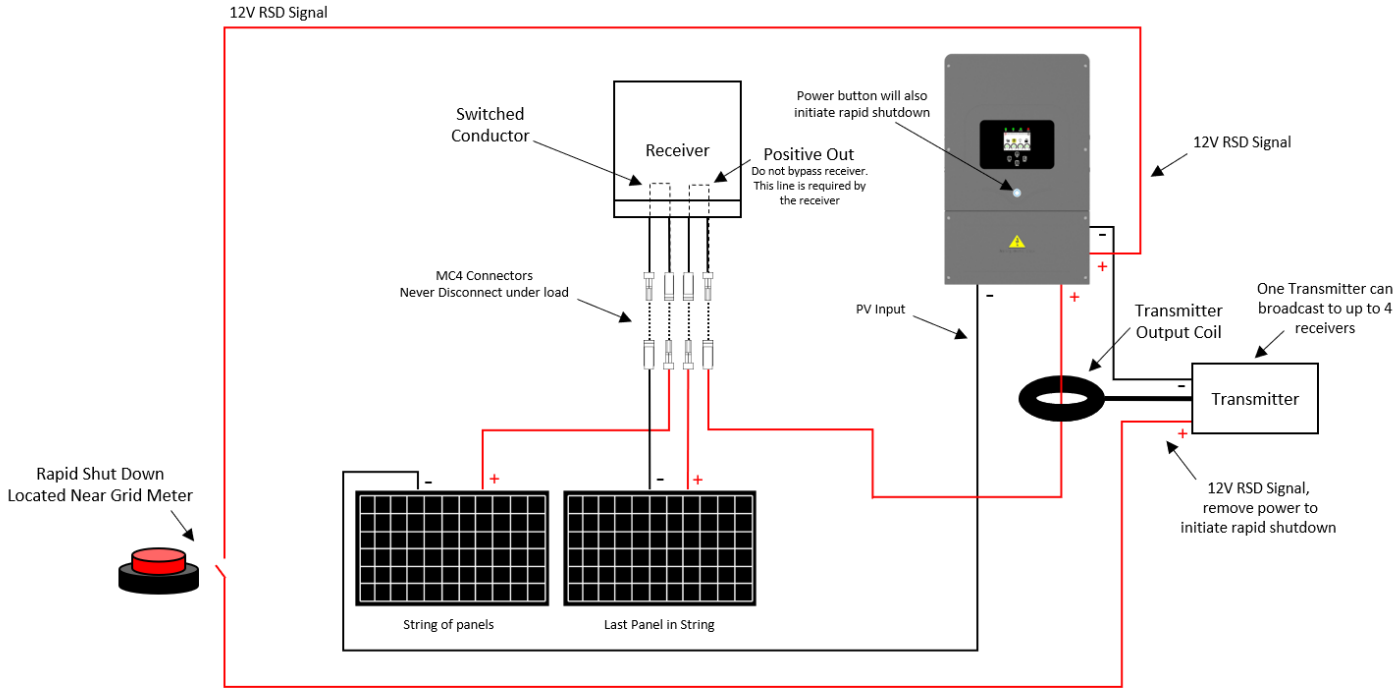

Repeat this setup for each string of panels

Note: If parallel systems: the RSD 12V power should come from an external supply, not the Sol-Arks, and pass through the same RSD button

Note: Transmitter fits inside the user area of the Sol-Ark 12K but can cause interference (placing it outside of the user area is recommended)

Rapid Shutdown Hardware Diagram (TIGO RSD per PV Module)

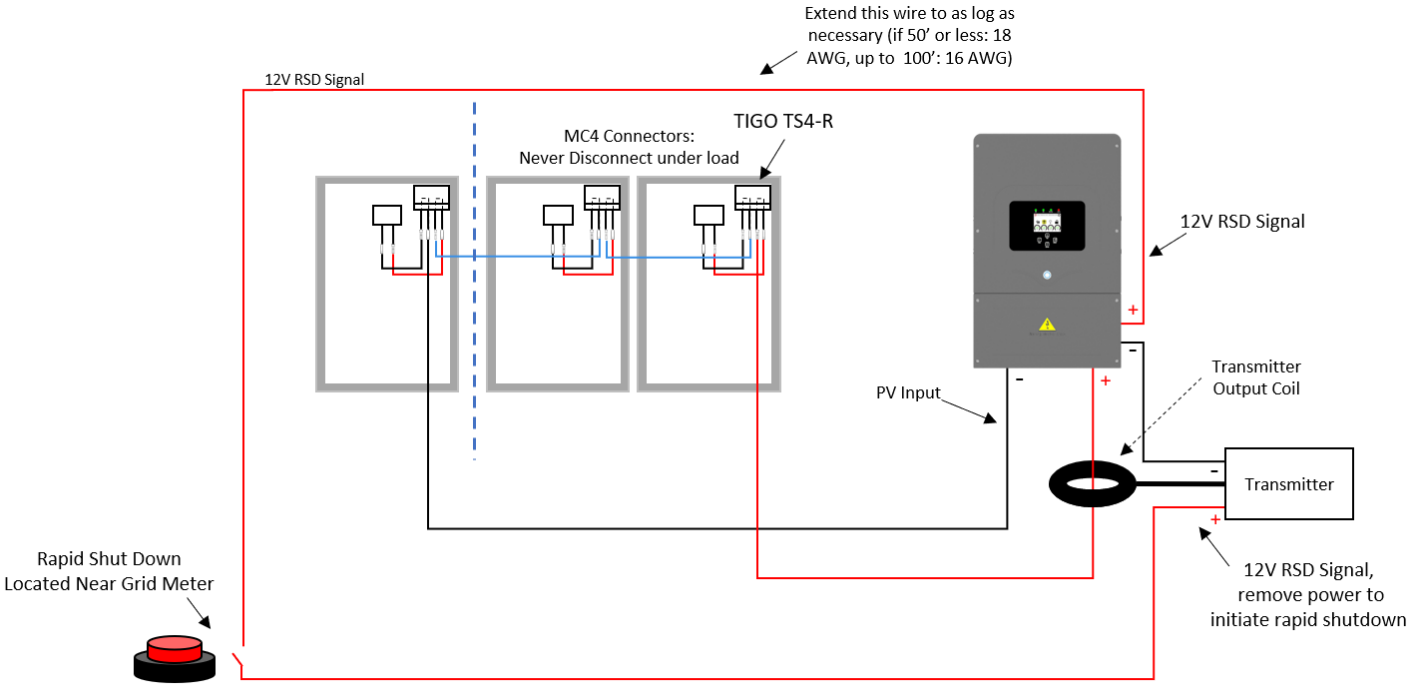

Repeat this setup for each string of panels

Sol-Ark-12K-P Specifications	
Solar Output Power 12000W	
Max allowed PV DC Capacity	6,500W+6,500W = 13,000W
Max PV power delivered to Battery & AC outputs	12000W
Max DC voltage	500V@18A, 450V@20A
MPPT voltage range	150-425V
MPPT Starting voltage	175V
Number of MPPT	2
Solar Strings per MPPT	2 w/o fuses, 3 w/ fuses
Max DC current per MPPT (self limiting)	20A@300V, 18A@400V
Max AC Coupling (Gen Breaker / Load Breaker)	7,600W / 9,600W
AC Output Power 9000W On Grid & 8000W Off Grid	
Connections	120/240/208V split phase
Continuous AC power to Grid (On Grid)	9000W 37.5A L-L (255V) 4800W 40A L-N (120V)
Continuous AC power to Loads (Off Grid)	8000W 33A L-L (240V) 4800W 40A L-N (120V)
Surge AC power 10sec Surge AC power 100ms	16,000VA L-L (240V) 25,000VA L-L (240V)
Parallel Stacking	2-8 (240V), 3-9 (208V)
Frequency	60/50Hz
Continuous AC power with Grid or Generator	12000W 50A L-L (240V) 6000W 50A L-N (120V)
CEC Efficiency	96.5% (Peak 97.5%)
Idle Consumption typical – no load	60W
Sell back power modes	Limited to Household or Full Grid-Tied
Design (DC to AC)	Transformerless DC
Response Time (Grid-Tied to Off-Grid)	4ms
Power Factor	+-0.9 - 1.0
Battery (optional) Output Power 9000W	
Type	Lead-Acid or Li-Ion
Nominal DC Input	48V
Capacity	50 – 9900Ah
Voltage Range	43.0 – 63.0V
Continuous Battery charging output	185A
Charging curve	3-stage w/ equalization
Grid to Battery Charging Efficiency	96.0%
External temperature sensor	included
Current shunt for accurate % SOC	integrated
External Generator Start based on voltage or % SOC	integrated
Communication to Lithium battery	CanBus & RS485

General	
Dimensions (H x W x D)	30.0" x 16.75" x 9.37"
Weight	74 lbs
Enclosure	NEMA type 1 (Indoor Use)
Ambient Temperature (3 variable speed fans)	-25 to 55C, >45C derating
Display	Color touch screen
Wi-Fi Communication (monitoring or SW updates)	included
Snap on sensors for limited selling to Household	included
Standard Warranty (verified by HALT testing)	10 years

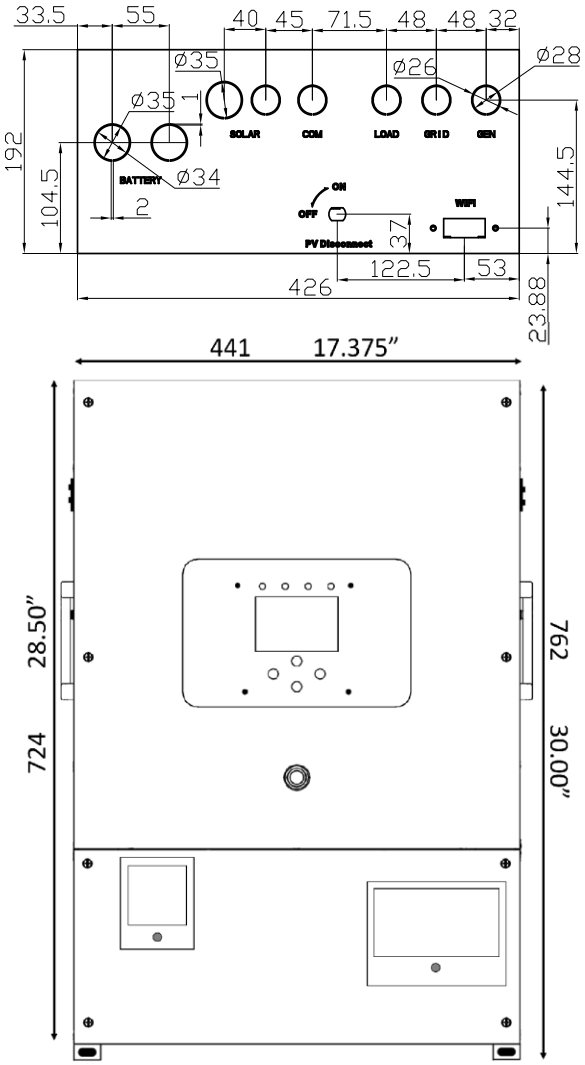

Protection & Certifications	
Electronics certified safety by SGS labs to NEC & UL specs – NEC 690.4B & NEC 705.4/6	Yes
Grid Sell Back – UL1741-2010/2018, IEEE1547a-2003/2014, FCC 15 class B, UL1741SA, CA Rule 21, HECO Rule 14H	Yes
PV DC disconnect switch – NEC 240.15	integrated
Ground Fault Detection – NEC 690.5	integrated
PV rapid shutdown control – NEC 690.12	integrated
PV Arc Fault detection – NEC 690.11/ UL1699B	integrated
PV input lightning protection	integrated
AC input/output 50A breakers	integrated
250A Battery breaker / disconnect	integrated
User wiring enclosure w/ ¾" & 1" knock-outs	integrated
Solar Flare/EMP Hardened to 2015 MIL-STD-461G (Independently tested June 2018)	optional

Off-Grid Install Tips

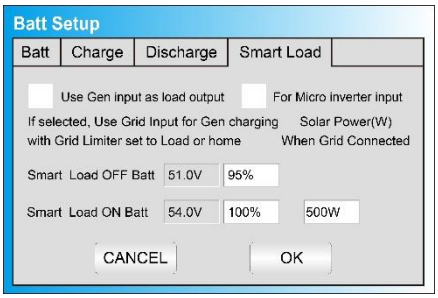

- Limiter Sensors are not required for completely Off-Grid installs unless using gen peak shaving with a gen connected to grid input breaker.
- The Grid input breaker on the Sol-Ark should be used as the Generator input (4-30kW generators) so that you maintain Smart Load output capability when off-grid. Smart Load will allow you to run high power non-essential appliances (hot water, dehumidifier, heat pump, irrigation pump) on solar power instead of batteries. Therefore, you will use Grid Charge (default) in the Battery Setup/Charge menu.
- When off grid there is no need for a transfer switch, simply connect the load output of the Sol-Ark to the whole home.
- Do not use Grid Sell or Limited To Home Modes. Only Limited power to load (default).
- The Auto Generator start functions as a 2-wire switch (closes the circuit when needing charging)
    - Auto Gen-start will be triggered when the battery voltage or percent reaches the level programmed in the battery setup menu. Then once triggered the generator will continue to charge the batteries until they are about 95% full (this percentage is not programmable) before turning the generator off.

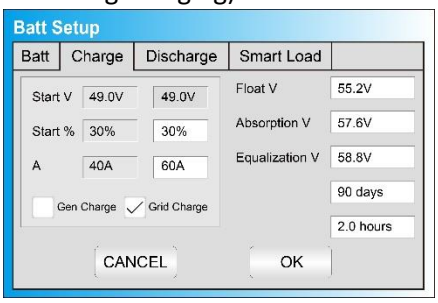

- When using a generator off-grid, we recommend changing the “grid reconnect time” under the Sell control tab of the grid setup menu to 30 seconds otherwise the Sol-Ark will not charge from the generator until is has been on for at least 5 minutes per the default value of 300 seconds.
- Under setup for Grid/Sell Control, select General Standard and “GEN connect to Grid Input”. Then go to Grid/Grid input to widen the input frequency range to 55-65Hz to work with any frequency generator.
- If you would like to use a wind turbine in conjunction with Sol-Ark 12K, the turbine must have a 48V charge controller with a dump load as to prevent overcharging of the batteries. Simply connect the charge controller on the turbine to the battery bank the Sol-Ark is using and the turbine will help charge your batteries.
- Don’t forget to set the Battery capacity and proper charge rates.

Grid-Tie / No Battery Install Tips

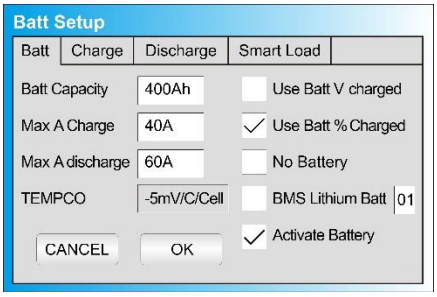

- Under Battery setup, select no Battery (or system will beep).
- Note: full system power cycle maybe required when changing between battery and no battery settings.
- Under Grid Setup, select Grid Sell.
- Touch Battery Icon to see the Detailed Volts View to verify your inputs & outputs.

Solar	Grid	INV	Load	Batt
0W	0W	0W	0W	69W
	50.0Hz	50.0Hz		87%
L1: 0V	117V	116V	116V	51.13V
0.0A	HM: 0W	0.2A		1.36A
0W	LD: 0W	0W	0W	0.0C
L2: 0V	117V	116V	116V	
0.0A	HM: 0W	0.2A		DC:50.1C
0W	LD: 0W	0W	0W	AC:40.3C

Powering on the system:

1. Turn on the Built-In battery disconnect
2. Make sure that Sol-Ark 12K is properly connected to the batteries, panels, grid, etc. (see system wiring diagram).
3. Turn on grid power breakers.
4. Press the power button on the front of the unit.
5. Make sure Solar panel inputs are not connected to Ground, then Turn on DC disconnect switch.
6. Turn on load breakers.

Indicator LEDs

- **DC**
  - Green = Solar Panels are producing
  - Off = Solar Panels are not producing
- **AC**
  - Green = Grid (or Generator) is Connected
  - Off = Grid is not Connected
- **Normal**
  - Green = Sol-Ark 12K is working properly
  - Off = Sol-Ark 12K is not working properly (call us)
- **Alarm**
  - Red = Alarm, check the alarms menu
  - Off = No alarms

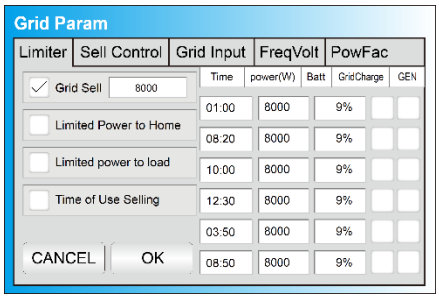

Selecting your Power Mode:

Sol-Ark 12K will simultaneously use various power sources available to meet loads demand. The following power modes allow the user to determine the power sources available to Sol-Ark 12K.

- Limited Load / Self Consumption
  - Sol-Ark will only power loads connected to it. It will not produce more power than the connected loads require. This mode will neither sell back to the home nor grid.
- Limited To Home (zeroing home meter)
  - Pushes power to your whole home without selling back any excess to the grid (no net metering agreement required)
  - This mode requires the use of the limiter sensors
    1. Main Menu → System Settings → Grid Setup → Limiter → Limited to Home
  - Power source priority is same as Grid Sell Back
- Grid Sell Back
  - This Mode allows Sol-Ark 12K to sell back any excess power produced by the solar panels to the grid.
    1. Main Menu → System Settings → Grid Setup → Limiter → Grid Sell
  - Power source priority is as follows:
    1. Solar Panels
    2. Grid
    3. Generator
    4. Batteries (until programable % discharge is reached)
- Time Of Use (using batteries during peak power times)
  - Only available when using Limited To Home mode (Limiter sensors required) and/or Grid Sell Back (Limiter sensors not required) modes
  - Use your batteries to reduce power consumption from the grid during a user programable peak pricing window of time.

1. Main Menu → System Settings → Grid Setup → Limiter → Time Of Use
    - Power source priority:
        1. Solar Panels
        2. Batteries (until programable % discharge is reached)
        3. Grid (can control when Grid charges)
- Off-Grid (powering loads)
    - This mode does not need to be programmed, Sol-Ark 12K will automatically operate in Off-Grid Mode in the absence of the grid.
    - Power source priority is as follows:
        1. Solar Panels
        2. Batteries
        3. Generator
- Note: Grid Sell and Limited to Home modes can be selected simultaneously
    - This changes the meaning of the load (light bulb) icon on the home screen to include both the load breaker power and the contribution of power being produced that is being consumed locally by the home.

Backup Generator Setup:

- Portable Generators (typically less than 10kW)
    - Connect to the generator output to the generator input breakers in the Sol-Ark 12K user panel.
    - Main Menu → System Settings → Battery Setup → Charge → Gen charge (only for Gen breakers)
- Standby Generators
    - Usually large generators have a whole home transfer switch that feeds the home. If using a single 12K for your install, we suggest not using the generator input breakers in the Sol-Ark but your normal home wiring to distribute the Generator's power (through your existing Gen transfer switch). If using a muti-system install, then it may be advantageous to pass all generator power through the systems as shown on diagram 8.
    - If off grid, connect the output of the Generator directly to the Grid input on the Sol-Ark 12K. It can then treat the generator as if it were the grid.
    - Under setup for Grid/Sell Control, select General Standard and "GEN connect to Grid Input". Then go to Grid/Grid input to widen the input frequency range to 55-65Hz to work with any frequency generator.
    - Main Menu → System Settings → Battery Setup → Charge → Grid charge (only for Grid breakers)
- Auto Gen Start Signal
    - Automatically start compatible backup generators
    - The threshold at which gen charging is triggered can be set using the input boxes above the checkbox.
    - Main Menu → System Settings → Battery Setup → Charge → Gen or Grid charge (%Batt or V)

Sensors:

- Limiter Sensors (Current Sensors)
    - Placed on the grid side of your home breaker panel and are required to enable limited To Home mode (see diagrams). (note: CT sensors point towards Sol-Ark in 208V)
- Battery Temperature Sensor
    - Placed on the battery bank and used to adjust charging voltage and capacity calculations
- PV Shutdown signal
    - Used to accommodate Rapid Shutdown of PV components and discharge onboard capacitors
- CanBus / RS485
        i. Used to communicate with Lithium batteries
        ii. RS485 is SunSpec draft 4 (will not work with draft 3)

Batteries:

Supported Battery Chemistries (48V configuration required for all chemistries)

- Lead Acid
  - AGM, Gel, Wet
- Lithium
  - NMC, LiPo4
- NiFe (Note: must use a 37 series cell configuration, 44.4V Nominal)
  - Set Absorb and Equalization to 61.0V, 3 hours, and days = 1 (every day). Float = 53.7V

Programming Battery Settings

g. Battery Capacity
   i. This allows Sol-Ark to know the size of the battery bank
   ii. Main Menu → System Settings → Battery Setup → Batt → Batt Capacity

h. Battery Type
   i. Navigate to the charge menu and set the values appropriate to your battery chemistry. The chart on page (35) is good reference for lead acid batteries.
   ii. Main Menu → System Settings → Battery Setup → Charge

i. Battery Discharge percentage
   i. Allows the user to define the depth of discharge the system will allow before using the grid/generator to the charge the battery bank. Solar is always the priority in charging the battery bank.
   ii. Main Menu → System Settings → Battery Setup → Discharge

Limiter Sensor Automatic Setup (Requires Batteries and does <u>NOT</u> work for 208V installs)

1) Install limiter sensors as described on page 26 (shown in diagram 1 as well). Battery and grid connections also required before starting auto-setup.
2) Navigate to the "Advanced" Tab of the Basic Setup screen (follow the directions below to get there).
   a) Touch the gear icon → Touch the Basic Setup button → Select the Advanced tab (see Fig. G).
3) Select "Auto detect Home Limit Sensors" and press ok.
4) Wait for the Sol-Ark to finish its learning process (Sol-Ark will alternate sell back between legs and magnitude automatically determining the correct settings for the sensors).
5) Verify sensors were correctly configured (see Fig. H) if they are not correct, repeat the learn function.

<u>Fig. G</u>

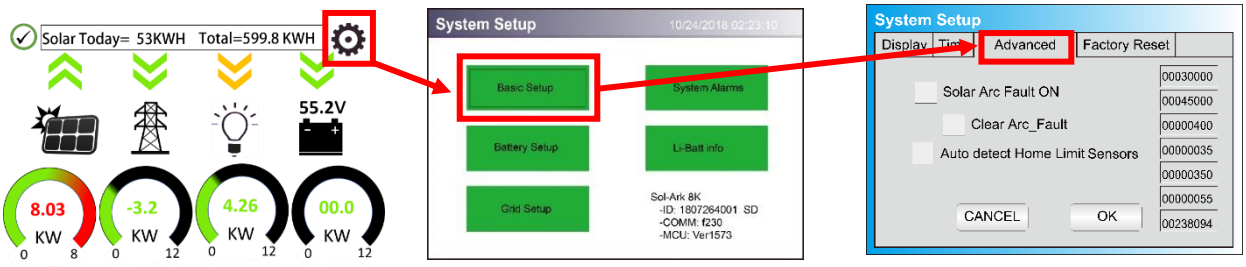

<u>Fig. H</u>

In Limited To Home Mode HM values will be close to zero. HM values should never be negative. If negative, the Limiter Sensors are not installed properly.

Solar	Grid	INV	Load	Batt
0W	0W	0W	0W	69W
	50.0Hz	50.0Hz		87%
L1: 0V	117V	116V	116V	51.13V
0.0A	HM: 0W	0.2A		1.36A
0W	LD: 0W	0W	0W	0.0C
L2: 0V	117V	116V	116V	
0.0A	HM: 0W	0.2A		DC:50.1C
0W	LD: 0W	0W	0W	AC:40.3C

Possible Limiter Sensor issues:

Sensors are facing wrong direction

Sensors are on the wrong wire(s)

Sensors are not fully closed on wire(s)

Sensor Polarity is wrong (White = + BLK = -)

Screens

- **Home Screen (Touchscreen)**

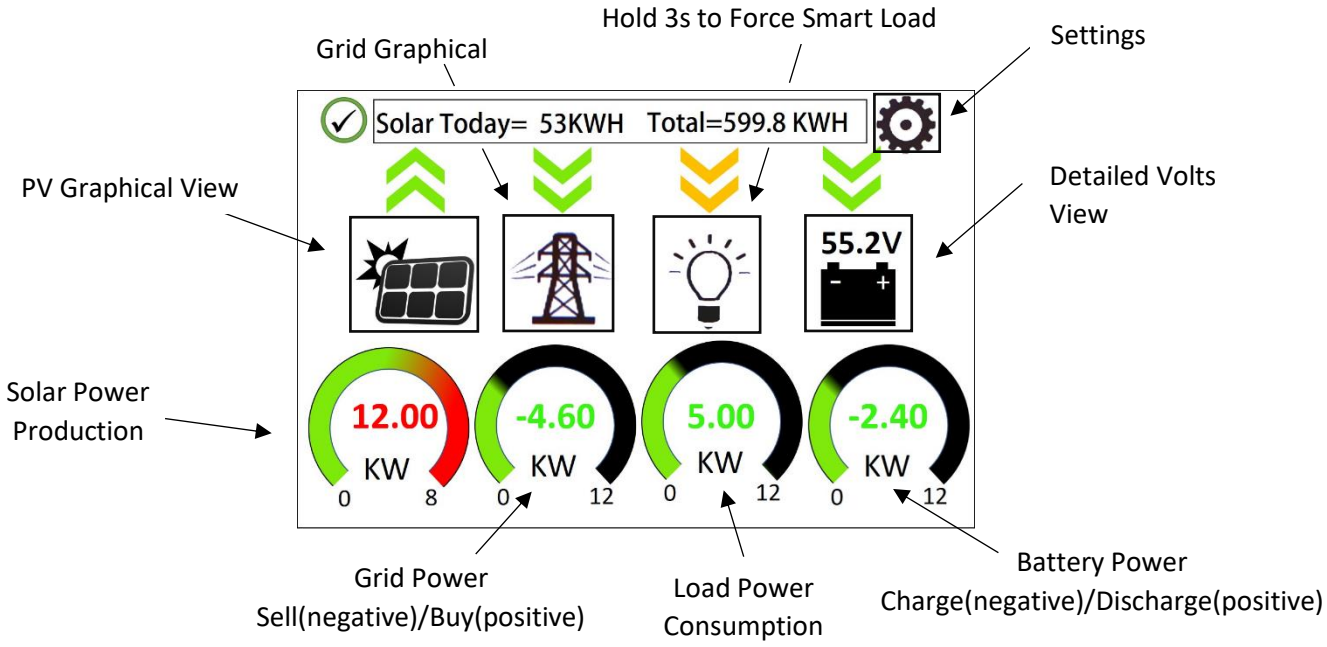

- **Detailed Volts View**
  - Top row = Total power for column
  - Middle Row = Line 1/PV1 voltage, Amps, and Watts (note: PV Voltage not to exceed 500)
  - Bottom Row = Line 2/PV2 voltage, Amps, and Watts (note: PV Voltage not to exceed 500)
  - Batt Temperature will show -20°C if temperature sensor is not connected.
  - Batt SOC % = % batteries are charged
  - DC Temp = Temperature of DC conversion electronics
    - Batt → AC
    - PV → Batt
    - AC → Batt
  - AC Temp = Temperature of AC conversion electronics
    - Batt → AC
    - PV → AC
  - Grid Column
    - If selling to grid, Grid Watts = negative
    - If buying from grid, Grid Watts = positive
    - Note: If these values are reversed, current sensors may have been installed incorrectly (reverse polarity).
    - HM = Power detected by the external current sensors on entire home L1 & L2
    - LD = Power detected using internal sensors on AC grid in/out breaker

Solar	Grid	INV	Load	Batt
0W	0W	0W	0W	69W
	50.0Hz	50.0Hz		87%
L1: 0V	117V	116V	116V	51.13V
0.0A	HM: 0W	0.2A		1.36A
0W	LD: 0W	0W	0W	0.0C
L2: 0V	117V	116V	116V	
0.0A	HM: 0W	0.2A		DC:50.1C
0W	LD: 0W	0W	0W	AC:40.3C

- **PV Graphical View**
  - Displays power production over time for the PV array
  - Use up/down buttons to navigate between days
  - Month view, Year view, and Total view
- **Grid Graphical View**
  - Displays power drawn from and sold to the grid over time
  - Bars above the line indicate power bought from the grid
  - Bars below the line indicate power sold back to the grid
  - This view can be helpful in determining when the most power is used in the home and for time of use programing
- **System Setup Menu**
  - ID = LCD serial #. But we use the WIFI serial #.
  - COMM = LCD software version
  - MCU = Inverter software version
- **System Alarms**
  - Lists all system alarms
- **Basic Setup**
  - Display
    - Brightness adjustment
    - Auto dim (must be enabled for LCD screen to be covered by warranty)
  - Time
    - Set date and time for the system
  - Alarms & Safety
    - Arc fault detects if a poor connection in the PV wires
  - Grid Peak Shaving
    - Set the threshold that the Sol-Ark will begin contributing Power to keep the power drawn from the grid below the threshold.
  - Gen Peak Shaving
    - Set the threshold at which the Sol-Ark will contribute to the generator to prevent large loads overloading the generator.
  - Parallel (when using multiple systems, Multi-system app note)
    - Select parallel mode when using multiple systems
    - Set the Master/Slave status of each system
      - Only one system can be set to “Master”
    - Set the MOBDUS address of each system
    - When using multiple system in 120/208V mode select which phase each system is responsible for (A,B,C)

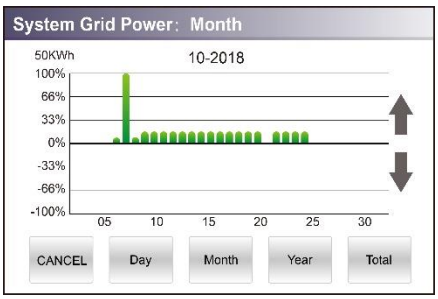

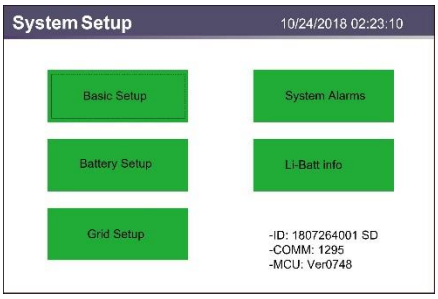

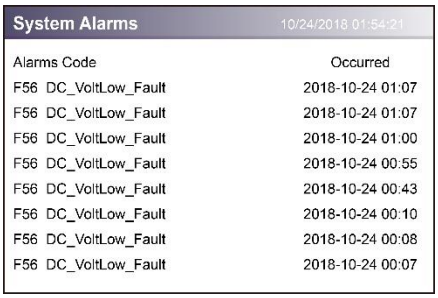

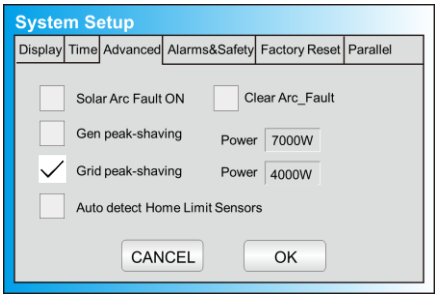

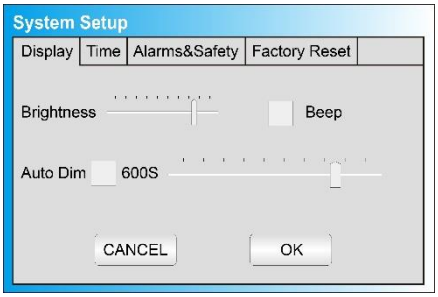

- **Batt Setup**
  - Batt
    - Batt Capacity: enter the size of the battery bank connected to the system
    - Max A charge: set the max charge rate for the batteries (This also sets PV → Battery charge rate)
    - Suggest 20%-30% of battery capacity for lead acid
    - Max A discharge: set max discharge for battery bank (In off-grid mode, the battery bank will discharge 120% of this value for 10 seconds before the inverter shuts down to prevent battery damage)

- TEMPCO: Temperature coefficient used in conjunction with the batt temp sensor to adjust optimal voltages for lead acid batteries
- Use Batt V charged: displays battery charge in terms of voltage
- Use Batt % charged: Battery voltage can be misleading for determining the % Charged. So, we use algorithms measuring power in and out to measure a true value for % Charged. It compensates for aging batteries also.

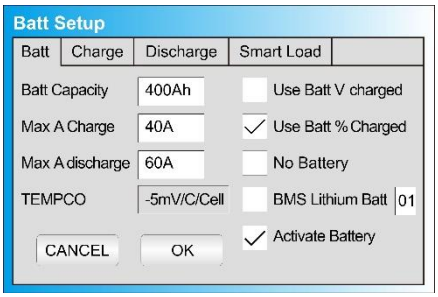

- **Charge**
  - Float V: Set value appropriate for the batteries connected to the system using chart (Page 35)
  - Absorption: Set value appropriate for the batteries connected to the system using chart (Page 35)
    - Absorption will stop at 1% of the capacity of the battery bank and drop to float
    - Ex: 400Ah battery would be 4A
  - Equalization: Set value appropriate for the batteries connected to the system using chart (Page 35)
  - Days: period between equalization cycles
  - Hours: period taken to equalize batteries
    - Note if Hours = 0 system will not equalize the batteries
  - Gen Charge: uses the gen input of the system to charge battery bank from an attached generator.

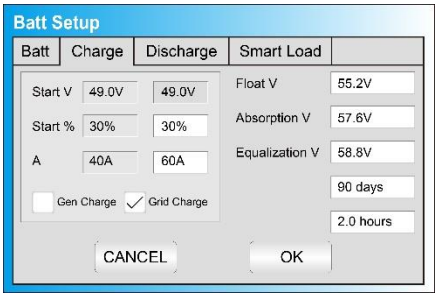

    - Start V: voltage at which system will AutoStart a connected generator to charge the battery bank
    - Start percentage: Percent S.O.C at which system will AutoStart a connected generator to charge the battery bank
    - A: charge rate from the attached generator in Amps
      - Note: size this value appropriately for your given generator size
  - Grid Charge
    - Start V: voltage at which system will charge the battery bank from the grid. If grid is on, batteries will stay at float voltage.
    - Start percentage: Percent S.O.C at which system will AutoStart a connected generator to charge the battery bank
    - A: charge rate from the grid in Amps
- **Discharge**
  - Shutdown V: battery voltage at which the inverter will shut down (batt symbol on home screen will turn red)
  - Low Batt: Low battery voltage (batt symbol on home screen will turn yellow)
  - Restart: battery voltage at which AC output will resume
  - Batt Resistance: used in % SOC batt calculations
  - Batt Charge Efficiency: used in % SOC batt calculations
  - Batt Empty V: sets reserve capacity and improve % SOC calculations. It is not Batt_I adjusted.
    - (Recommendations: 45V for AGMs, 48V for Lithium Iron Phosphate)

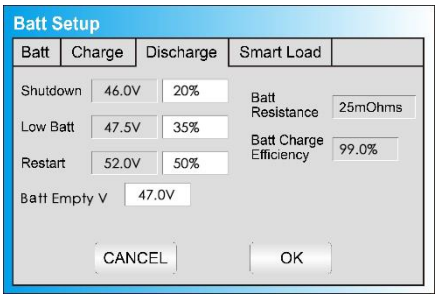

- **Smart Load (Gen Load)**

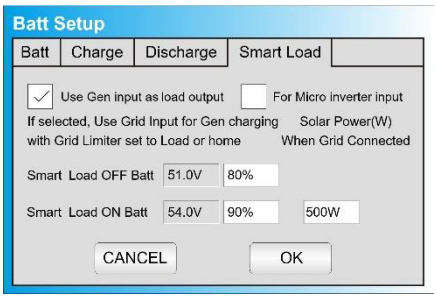

- This mode utilizes the Gen input connection as an output which only receives power when the battery is above a user programmable threshold.
- The Gen input breaker in the user area of the system becomes an output to high power loads such as a water heater, irrigation pump, ac unit, pool pump.
- Smart Load OFF Batt
  - Battery voltage at which the Gen load will stop being powered
- Smart Load ON Batt
  - Battery voltage at which the gen load will start being powered
- Note: If using Gen load for a water heater, it is recommended that only one leg (120V) be connected to the bottom element. This significantly reduces the power consumption of the water heater while retaining core functionality (it will heat water, only slower).
- Note: Gen Load is limited to 40A at 240V (Do not exceed!)

- Solar Watts is for on grid.
  - System waits to turn on smart load until enough PV power is produced (when on grid).

- **AC Coupling Settings (For Micro Inverter Input)**
  - To use the Gen input breaker as a micro inverter AC coupled input, check the “For Micro inverter Input” box (this feature will also work with “Grid-Tied” Inverters)
    - Maximum combined input to Sol-Ark (AC+DC)
      - Best: 3kWAC + 11kWDC (8KW sell)
      - Good: 2kWAC + 12kWDC (9KW sell)
      - OK: 4kWAC + 7kWDC
      - Poor: 5kWAC + 6kWDC
      - Poor: 6kWAC + 5kWDC

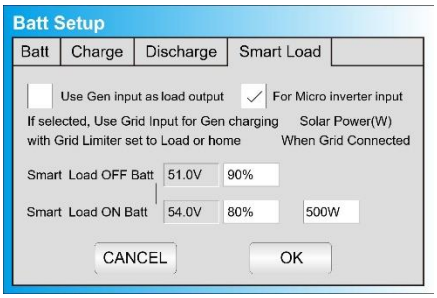

  - To use the LOAD breaker for AC coupling grid tied inverter(s)
    - You must select “For Micro Inverter Input”
    - The Gen Breaker is not used (even though the GEN breaker is not physically being used for this mode, AC coupling on the LOAD breaker prevents the use of the GEN breaker)
    - Wire as show in the preceding example diagram labeled “Load side AC coupling example”
    - Note: some load side AC coupling installs will require a line side tap instead of the 50A breaker shown in the example diagram
    - Maximum combined input to Sol-Ark (AC+DC)
      - Max AC + DC: 9kWAC (Load side) + 2kWDC
      - Max DC + AC: 12kWDC + 2kWAC
  - Note: when AC coupling “For Micro Inverter Input must be selected”
    - The meaning of Smart Load OFF Batt and Smart Load ON Batt change in this mode
      - Smart Load OFF Batt: The SOC at which the AC coupled inverter(s) are shut down when in off-grid mode
        - 90% recommended
      - Smart Load ON Batt: The SOC at which the AC coupled inverter(s) are turned on when in off-grid mode
        - 60%-80% recommended
      - When on grid the AC coupled inverter will always be on and the power it produces will be sold back to the grid. **Limited To Home mode will not function with AC coupled PV arrays.**

- **Grid Setup**
  - Limiter

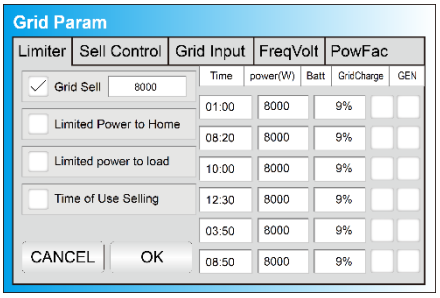

    - Grid Sell: maximum watts sold to grid
    - Limited To Home: Limits power produced by the system to match the demand of the home
    - Limited To Load: Limits power produced by the system to match the demand of connected loads
    - Time Of Use:
      - Time: When the system will sell batt/PV power to the grid or home
      - Power(W): Max watts to be sold from the battery only at each time
      - Batt: The battery voltage or % at which the system will limit selling to the grid or home from the battery. The system will drain the battery until that percent/voltage is reached.
      - Grid Charge: Enables grid charging during a selected period up to the voltage or percentage specified on the line. PV will always charge to 100%.
      - Gen Charge: Enables a generator to be called during this time period, if not checked generator will not be called for even if the start voltage/% is reached. If the generator is running and then the next time slot is reached and does not have gen charge checked, the generator will be turned off. Otherwise the generator will only be turned off once the charging amperage accepted by the battery bank reaches 5% of its rated capacity in amps. For example, if you had a 100Ah battery the generator would be turned off once the battery only accepted 5 amps of charging current.
      - For Examples: See Pages 38-39
    - Note: This mode requires Grid sell / limited to home be enabled.
    - Note: If you need the batteries to never charge from the grid, uncheck the “Grid Charge” box under the charge tab of the battery menu (see page 30).
  - **Sell Control**

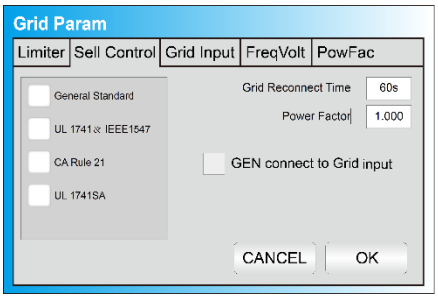

    - General Standard: uses Protect Parameters in table
    - UL 1741 & IEEE1547: Enables sell compliant functionality
    - UL1741SA: Enables wider Freq, Voltage, and Power Factor
    - GEN connect to Grid Input: Must be set if Generator is connected to AC Grid breaker
  - **Grid Input**

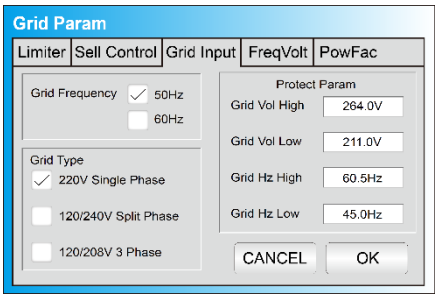

    - Grid Frequency: Select the frequency of the grid connected to the system
    - Grid Type:
      - 220V Single Phase (Call us before using)
      - 120/240 Split Phase (North America)
      - 120/208V 3 Phase
      - Note: If 120/208V, the L1 and L2 are phase specific. So, you may have to swap Grid L1 L2 for 208V applications.
      - Note: Inverter power cycle is required each time the input/output voltage is changed
    - Protect Parameters (when
      - Settings when the system will connect/disconnect from grid
      - This is not used when UL 1741 & IEEE1547 is enabled
      - You may need to widen the frequency range when using a generator (55-65 Hz)

- **FreqVolt (UL 1741SA must enabled in "Sell Control" tab)**
  - **<u>Puerto Rico Grid Compliance Settings:</u>**

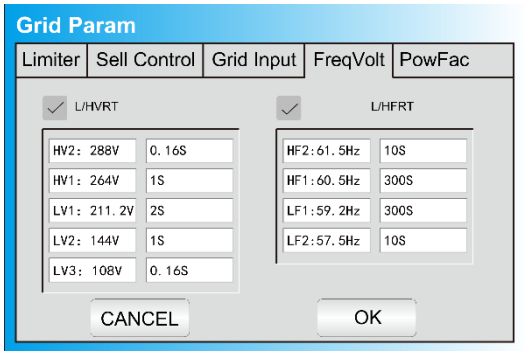

  - **<u>Kauai Grid Compliance Settings:</u>**

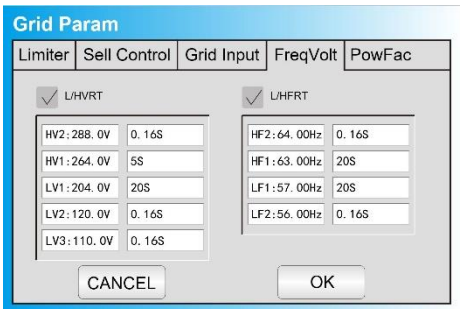



  - **<u>HECO Grid Compliance Settings for O'ahu, Maui, Hawai'i:</u>**

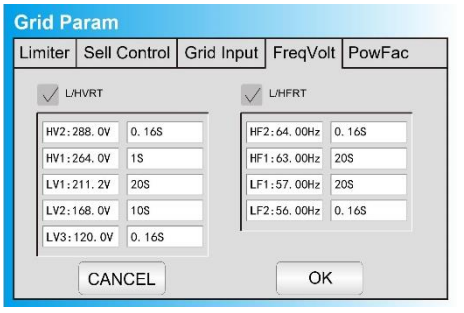

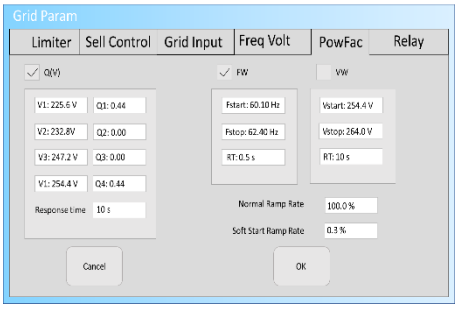

  - **<u>HECO Grid Compliance Settings for Lana'I and Moloka'i:</u>**

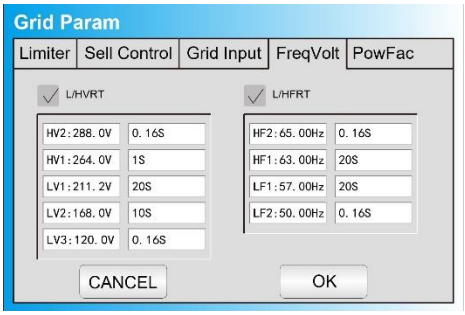

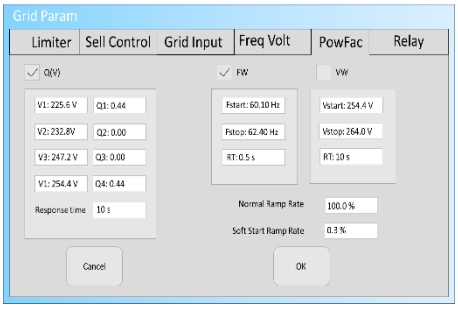

- **PowFac**
  - Power Factor is programmable from 0.8 – 1.0.

Sol-Ark 12K Menus

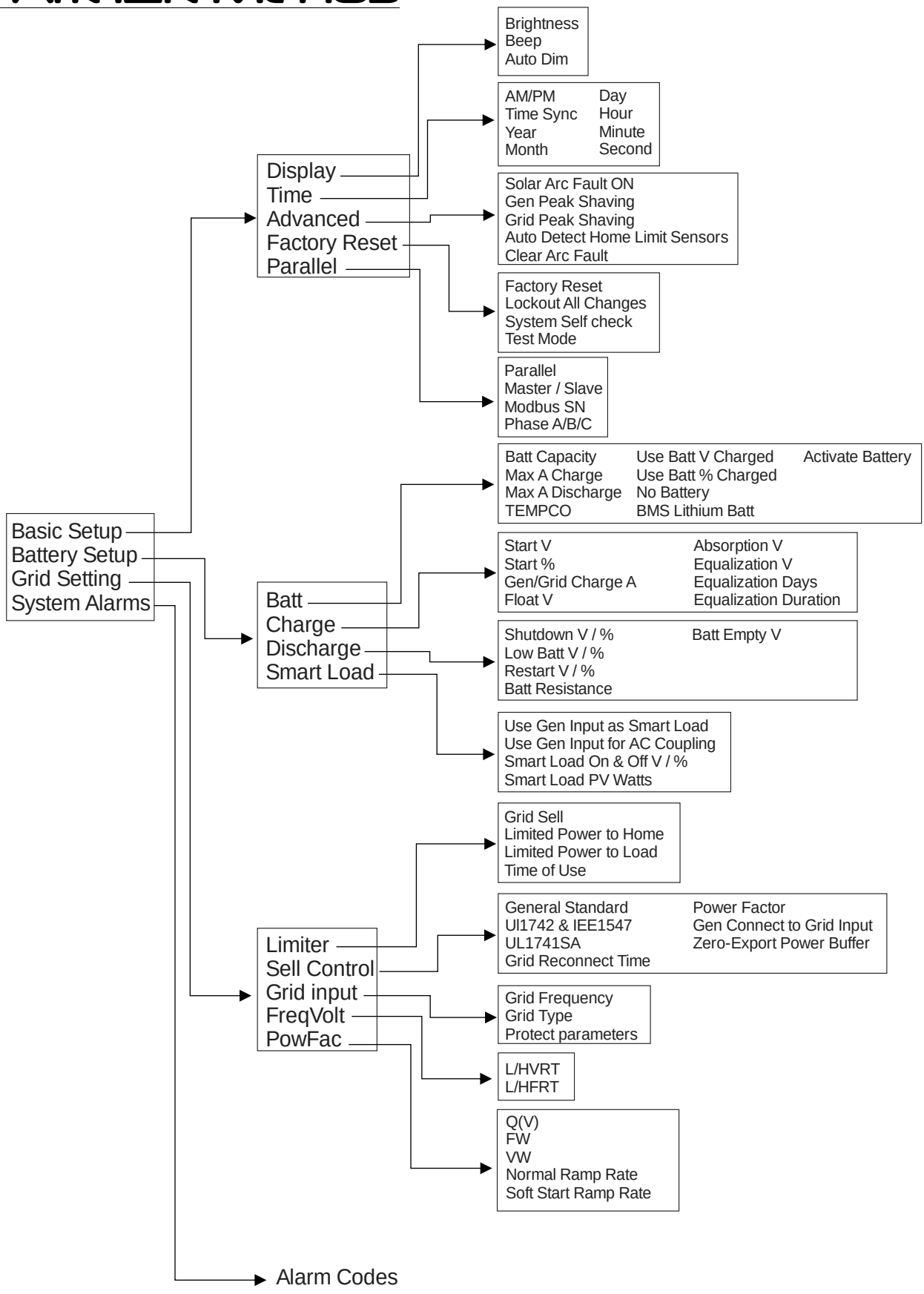

Battery Charging Information

4-Stage Charging

The MPPT has a 4-stage battery charging algorithm for rapid, efficient, and safe battery charging. The figure below shows the stage sequence.

MPPT Charging Algorithm

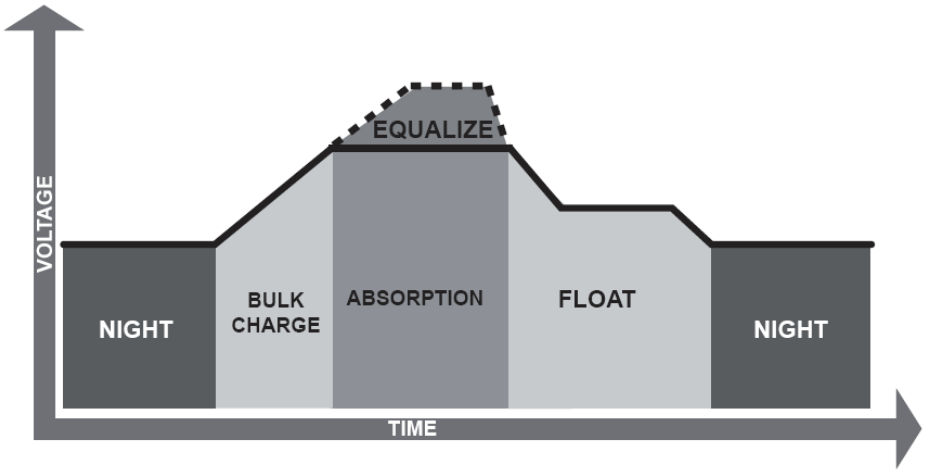

Bulk Charge Stage

In Bulk Charge stage, the battery is not at 100% state of charge and battery voltage has not yet charged to the Absorption voltage setpoint. The controller will deliver 100% of available solar power to recharge the battery.

Absorption Stage

When the battery has recharged the absorption voltage setpoint, constant-voltage regulation is used to maintain battery voltage at the absorption setpoint. This prevents heating and excessive battery gassing. The battery is allowed to come to full state of charge at the absorption voltage setpoint. Absorption lasts until batteries charge at 1% of programmed Ah size.

Float Stage

After the battery is fully charged in the Absorption stage, the MPPT reduces the battery voltage to the float voltage setpoint. When the battery is fully recharged, there can be no more chemical reactions and all the charging current is turned into heat and gassing. The float stage provides a very low rate of maintenance charging while reducing the heating and gassing of a fully charged battery. The purpose of float is to protect the battery from long-term overcharge.

Battery Charging Setpoint (48V)

Battery Type	**Absorption Stage**	**Float Stage**	**Equalize Stage** **(every 30 days 3hr)**
AGM (or PCC)	14.4v (**57.6v**)	13.5v (**53.6v**)	14.4v (**57.6v**)
Gel	14.1v (**56.4v**)	13.5v (**54.0v**)	
Wet	14.7v **(59.0v)**	13.7v **(55.0V)**	14.7v **(59.0v)**
Lithium	14.1v (**54.6v**)	13.2v (**54.3v**)	14.1v (**54.6v**)

Default

Note:

When batteries are in series, the voltages add to each other.

When batteries are in parallel the Amp hours add to each other.

How to calculate Amp Hours for your battery bank (PCC 230):

Battery Count	**Voltage per Battery**	**Amp Hours per Battery**	**Total Amp Hours @48V**	**Max Charge/ Discharge Amp**
4	12V	230Ah	230Ah	100A
8	12V	230Ah	460Ah	185A
12	12V	230Ah	690Ah	185A
16	12V	230Ah	920Ah	185A

Troubleshooting Guide

- **LCD is not powering on**
  - Check all connections
    - At least one of the following power sources is required: PV/Grid/Battery
  - Try pressing the power button. Or touchscreen or navigation button.
- **Panels are connected but DC Light is not on**
  - PV voltage must be 150V-500V
  - It's night
- **Panels are not producing**
  - Check all solar panel connections are wired properly
  - Turn on PV disconnect
  - Check that the PV input voltage is not greater than 500V
  - If system says PV=0V, check PV polarity
- **Panels are not producing much power**
  - PV Wire Strip Length: 5/8". Your batteries maybe charged, you can test Grid Sell to verify.
- **System not keeping batteries charged**
  - Check the charge setting in the Charge Menu
- **Auto Gen-Start not working**
  - Check to make sure your generator is compatible with Auto Start
  - Make sure that the Auto Gen Start wire is connected properly to the Sol-Ark 12K and the generator
- **Normal LED isn't on**
  - Sol-Ark 12K is not working properly (Call us)
- **Alarm Light is on**
  - Check the system alarms menu to see which alarm has been triggered
- **Grid HM value is negative when it should be positive (only applies in limited home mode)**
  - Limiter Sensors are installed backwards or L1/L2 sensors are swapped or L1/L2 sensors mis-wired
- **AC Overload Fault or Bus Unbalance Fault**
  - Check Transfer Switch/Subpanel wiring
  - Check for large loads that pull more than the inverter is rated for (EX: AC units over 4 tons)
- **System connects to grid and quickly disconnects**
  - With a DMM, verify your Neutral wire is connected (should be 0Vac referenced to GND)
  - Check your Freq is set to 60Hz and the 12K see's 120V on L1 & L2 to N.
  - If overloading: verify 120/240V grid input and load output wires are not swapped.
  - If 120/208V, the L1 and L2 are phase specific. So, you may have to swap Grid L1 L2 for 208V applications.
- **DC Overload Fault**
  - Check PV voltage
  - Make sure you have not wired more than 2 solar stings in parallel
- **System is beeping**
  - Check the system alarms menu to see which alarm has been triggered. Most alarms will self-reset.
  - There is no battery connected. If not using a battery, select no battery in the setup Batt menu.
    - To fully reset system, turn off center button, remove AC Grid and PV Power for 30s (screen is dead), then power up.
- **Battery cable is sparking when connected**
  - Put the built-in battery disconnect in the off position before connecting or disconnecting batteries.
- **Battery symbol on home screen is red**
  - Battery is under voltage or over voltage
- **Battery symbol on home screen is yellow**
  - Battery is low or charge/discharge current is close to the programmed limit (which is ok)
- **Grid symbol on home screen is yellow**
  - Grid parameters are out of specified range or grid is down
- **System has restarted**
  - Happens if: System is overloaded, Battery voltage is greater than 61V, or Software update

- **Batteries were connected backwards**
    - Battery fuse has blown (Call us)
- **Why is LCD screen still on when power button is off?**
    - If PV or Grid power, LCD stays on but inverter and loads are off.
- **The Batt % meter is not reaching 100%**
    - System needs to go through a small discharge/charge cycle to first calibrate battery
- **Generator setup is reading 0Hz**
    - Select "General Standard" instead of UL1741. Then widen the voltage range to 53Hz-65Hz.
- **Color Touchscreen is Frozen**
    - Press and hold the escape button [←] for 7-10 seconds

Sol-Ark 12K Error Codes

Fault	Instruction	Common Cause/Remedy
F1	DC Inversed Failure	If you have parallel systems and turn one system off, you with get this notification. Not a fault.
F8	GFDI_Relay_Failure	Current Leakage from inverter AC output to ground, check ground and neutral are connected at the main panel
F10	AuxPowerBoard_Failure	Contact Sol-Ark.com
F13	Grid_Mode_change	Can happen when not using batteries or if Grid Input settings are changed. This is a notification, NOT a fault. If you change from No Batt to Battery mode, power system down completely to restart.
F15	AC_OverCurr_Failure	Usually caused by Loads being too large for the inverter. If off-grid, the battery discharge amps programmed too low. Overloads can result in F15, F18, F20, or F26.
F16	GFCI_Failure	Ground fault. Check PV+ or PV- wiring (which must be ungrounded). Exposed PV conductors + rain can also cause. Check that neutral line and Ground is not double bonded (which is common with portable generators).
F18	Tz_Ac_OverCurr_Fault	Overloaded the Load Output, reduce loads. Wiring Short on the AC Side can also cause this error. Overloads can result in F15, F18, F20, or F26.
F20	Tz_Dc_OverCurr_Fault	Usually caused by DC current from battery that are too large (ex: 4 Ton AC Unit). Overloads can result in F15, F18, F20, or F26.
F23	Tz_GFCI_OC_Fault	PV Ground fault. Check PV+ or PV- wiring (which must be ungrounded or damage can occur). Typically caused by pinched PV wire grounding the PV+ or PV-. Grounded PV wire can cause F20, F23 or F26.
F24	DC_Insulation_Fault	Exposed PV conductor combined with moisture is faulting (can cause F16, F24, F26).
F26	BusUnbalance_Fault	Too much load one leg (L1 or L2) Vs the other leg or DC loads on the AC output when off-grid. Grounded PV wire can cause F20, F23 or F26.
F29	AC_AirSwitch_Fault	Usually a communication error for parallel systems, check cables and MODBUS addresses
F30	AC_MainContactor_Fault	Contact Sol-Ark.com
F34	AC Overload Fault	AC Overload or load shorted. Please reduce heavy loads.
F35	AC_NoUtility_Fault	Contact Sol-Ark.com
F41	AC_WU_OverVolt_Fault	If one system faults in parallel, this normal fault will register on the other units as they disconnect from Grid
F45	AC_UV_OverVolt_Fault	Grid under voltage causes disconnect. This will self-reset when grid stabilizes.
F46	Parallel_Aux_Fault	Cannot communicate with other parallel systems. Check Master = 1, Slaves are 2-9, ethernet cables are connected.
F47	AC_OverFreq_Fault	Grid over Frequency (common in power outages) causes disconnect. Will self-reset when grid stabilizes.
F48	AC_UnderFreq_Fault	Grid under Frequency (common in power outages) causes disconnect. Will self-reset when grid stabilizes.
F49	AC_U_GridCurr_DcHigh_Fault	Contact Sol-Ark.com
F55	DC_VoltHigh_Fault	PV maybe higher than 500V. Battery voltage should not be above 59V or 63V (depending on model).
F56	DC_VoltLow_Fault	Batteries are overly discharged or Lithium BMS has shutdown. If battery settings are off, this can also happen.
F63	ARC_Fault	Can be a bad PV connector/connection. And sometimes a false alarm due to powerful lightning storms.
F64	Heatsink_HighTemp_Fault	Check the built-in fans are running, ambient temp may be to high

Common Battery Application Notes

Sol-Ark PCC-230 Battery

Batt Capacity: 230Ah x #Parallel_Batteries
(1 parallel = 4 Batt in series, 2 = 8 Batt, 3 = 12 Batt, 4 =16 Batt)
Max A Charge: 100A x #Parallel_Batteries
Max A Discharge: 100A x #Parallel_Batteries
Max A Grid Charge: 50A x #Parallel_Batteries
TEMPCO: -5mV/C/Cell
Float V: 53.6V
Absorption V: 57.6V
Equalization V: 57.6V
Equalization Days: 30
Equalization Duration: 3 Hours
Recommended Shutdown V / Percentage: 47.0V & 20%
Recommended Low Batt V / Percentage: 47.5V & 35%
Recommended Restart V / Percentage: 52.0V & 50%
Battery Resistance: 35mOhms (8 Batt) or 25mOhms (16 Batt)
Battery Charge Efficiency: 99%
Battery Empty Voltage: 45V

Time	Watts	SOC	GridCharge
1:00AM	1500*Par_Batts	50%	
5:00AM	1500*Par_Batts	50%	
9:00AM	1500*Par_Batts	50%	
1:00PM	1500*Par_Batts	100%	
4:00PM	1500*Par_Batts	50%	
9:00PM	1500*Par_Batts	50%	

These settings will charge the batteries off solar only. Discharge the batteries down to a maximum of 50% full.

Limited To Home mode will not sell to the grid from the batteries (only the home will use battery power). The 100% time slot is to ensure that the batteries are properly cycled each day.

Fortress Battery LFP-10

Batt Capacity: 200Ah x #Parallel_Batteries
Max A Charge: 100A x #Parallel_Batteries
Max A Discharge: 100A x #Parallel_Batteries
Max A Grid Charge: 80A x #Parallel_Batteries
TEMPCO: 0mV/C/Cell
BMS Lithium Batt: Not Selected
Float V: 54.4V
Absorption V: 54.6V
Equalization V: 54.6V
Equalization Days: 30
Equalization Duration: 1 Hours (tops off battery)
Recommended Shutdown V / Percentage: 51.3V & 20%
Recommended Low Batt V / Percentage: 51.7V & 30%
Recommended Restart V / Percentage: 51.9V & 40%
Battery Resistance: 5mOhms
Battery Charge Efficiency: 99%
Battery Empty Voltage: 47V

Time	Watts	SOC	GridCharge
1:00AM	6000*Par_Batts	40%	
5:00AM	6000*Par_Batts	40%	
9:00AM	6000*Par_Batts	40%	
1:00PM	6000*Par_Batts	40%	
5:00PM	6000*Par_Batts	40%	
9:00PM	6000*Par_Batts	40%	

These settings will charge the batteries off solar only. Discharge the batteries down to a maximum of 40% full.

Limited To Home mode will not sell to the grid from the batteries (only the home will use battery power).

Simpliphi Power: PHI 3.8 Battery 48V

Batt Capacity: 75Ah x # Batt
Max A Charge: 34A x # Batt (20A for better lifespan)
Max A Discharge: 60A x # Batt (34A for better lifespan)
Max A Grid Charge: 20A x # Batt
TEMPCO: 0mV/C/Cell
BMS Lithium Batt: Not Selected
Float V: 54.0V
Absorption V: 54.4V
Equalization V: 56V
Equalization Days: 30
Equalization Duration: 1 Hours (tops off battery)
Recommended Shutdown V / Percentage: 50.2V & 20%
Recommended Low Batt V / Percentage: 50.6V & 30%
Recommended Restart V / Percentage: 51.0V & 40%
Battery Resistance: 8mOhms (3 Batt) 4mOhms (6 Batt)
Battery Charge Efficiency: 99%
Battery Empty Voltage: 48V

Time	Watts	SOC	GridCharge
1:00AM	1000*Batts	40%	
5:00AM	1000*Batts	40%	
9:00AM	1000*Batts	40%	
1:00PM	1000*Batts	40%	
5:00PM	1000*Batts	40%	
9:00PM	1000*Batts	40%	

These settings will charge the batteries off solar only. Discharge the batteries down to a maximum of 40% full.

Limited To Home mode will not sell to the grid from the batteries (only the home will use battery power).

Blue Ion 2.0 Battery

Batt Capacity: 40Ah x #Parallel_Batteries
(4 Parallel = 160Ah, 6 = 240Ah, 8 = 320Ah)
Max A Charge: 160A w/ 4 Batteries, 185A w/ 6+
Max A Discharge: 160A w/ 4 Batteries, 185A w/ 6+
Max A Grid Charge: 160A w/ 4 Batteries, 185A w/ 6+
TEMPCO: 0mV/C/Cell
BMS Lithium Batt: 03
Float V: 55.2V
Absorption V: 55.2V
Equalization V: 55.2V
Equalization Days: 30
Equalization Duration: 1 Hours (tops off battery)
Recommended Shutdown V / Percentage: 47.0V & 20%
Recommended Low Batt V / Percentage: 49.0V & 30%
Recommended Restart V / Percentage: 52.0V & 40%
Battery Resistance: 5mOhms
Battery Charge Efficiency: 98%
Battery Empty Voltage: 46V

Time	Watts	SOC	GridCharge
1:00AM	8000*Par_Batts	40%	
5:00AM	8000*Par_Batts	40%	
9:00AM	8000*Par_Batts	40%	
1:00PM	8000*Par_Batts	40%	
4:00PM	8000*Par_Batts	40%	
9:00PM	8000*Par_Batts	40%	

These settings will charge the batteries off solar only. Discharge the batteries down to a maximum of 40% full.

Limited To Home mode will not sell to the grid from the batteries (only the home will use battery power). The 100% time slot is to ensure that the batteries are properly cycled each day.

Dyness B4850 Battery Module

Batt Capacity: 50Ah x #Parallel_Batteries
Max A Charge: 50A (25A for life) x #Parallel_Batteries
Max A Discharge: 50A x #Parallel_Batteries
Max A Grid Charge: 50A x #Parallel_Batteries
TEMPCO: 0mV/C/Cell
BMS Lithium Batt: 01
Float V: 53.8V
Absorption V: 54.0V
Equalization V: 54.0V
Equalization Days: 30
Equalization Duration: 1 Hours (tops off battery)
Recommended Shutdown V / Percentage: 47V & 20%
Recommended Low Batt V / Percentage: 48V & 30%
Recommended Restart V / Percentage: 49V & 40%
Battery Resistance: 5mOhms
Battery Charge Efficiency: 98%
Battery Empty Voltage: 46V

Time	Watts	SOC	GridCharge
1:00AM	2400*Par_Batts	40%	
5:00AM	2400*Par_Batts	40%	
9:00AM	2400*Par_Batts	40%	
1:00PM	2400*Par_Batts	40%	
5:00PM	2400*Par_Batts	40%	
9:00PM	2400*Par_Batts	40%	

These settings will charge the batteries off solar only. Discharge the batteries down to a maximum of 40% full.

Limited To Home mode will not sell to the grid from the batteries (only the home will use battery power).

Discover Battery

Batt Capacity: 130Ah x #Parallel_Batteries
Max A Charge: 130A (25A for life) x #Parallel_Batteries
Max A Discharge: 130A x #Parallel_Batteries
Max A Grid Charge: 100A x #Parallel_Batteries
TEMPCO: 0mV/C/Cell
BMS Lithium Batt: 00
Float V: 53.8V
Absorption V: 54.4V
Equalization V: 54.4V
Equalization Days: 30
Equalization Duration: 1 Hours (tops off battery)
Recommended Shutdown V / Percentage: 47V & 20%
Recommended Low Batt V / Percentage: 48V & 30%
Recommended Restart V / Percentage: 49V & 40%
Battery Resistance: 5mOhms
Battery Charge Efficiency: 98%
Battery Empty Voltage: 45V

Time	Watts	SOC	GridCharge
1:00AM	2400*Par_Batts	40%	
5:00AM	2400*Par_Batts	40%	
9:00AM	2400*Par_Batts	40%	
1:00PM	2400*Par_Batts	40%	
5:00PM	2400*Par_Batts	40%	
9:00PM	2400*Par_Batts	40%	

These settings will charge the batteries off solar only. Discharge the batteries down to a maximum of 40% full.

Limited To Home mode will not sell to the grid from the batteries (only the home will use battery power).

Wire Gauge Guide (Copper)

PV input: 10AWG

Grid input: 6-4AWG

Gen input: 6-4AWG

Load output: 6-4AWG

All Sensors: 20-24AWG

Battery input: 2/0-4/0AWG (3/8th Lugs)

15.875mm (5/8in)

2/0 AWG Max

Limiter Sensor Small

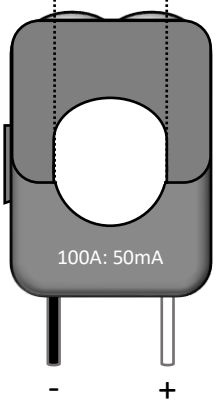

23.813mm (15/16in)

4/0 AWG Max

Limiter Sensor Large

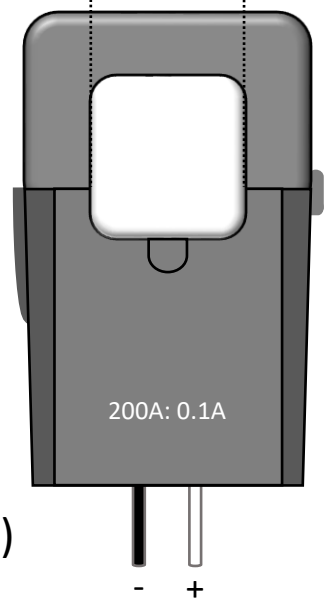

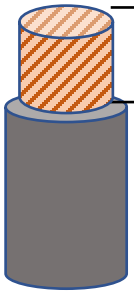

15.875mm (5/8in)

10 AWG Max

PV Panel Inputs

0’ – 100’: 12 AWG

100’ – 300’: 10 AWG

25.4mm (1.0in)

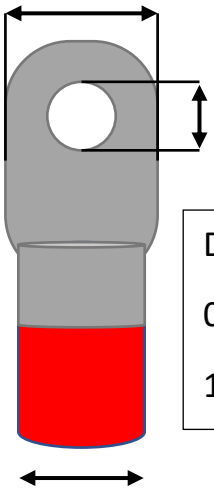

10mm

DC Battery Input

0’ – 12’: 2/0 AWG

12’ – 20’: 4/0 AWG

4/0 AWG Max

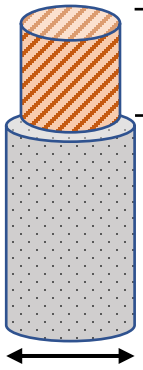

15.875mm (5/8in)

All AC Inputs / Outputs / Neutral Connections

0’ – 100’: 6 AWG

4 AWG Max

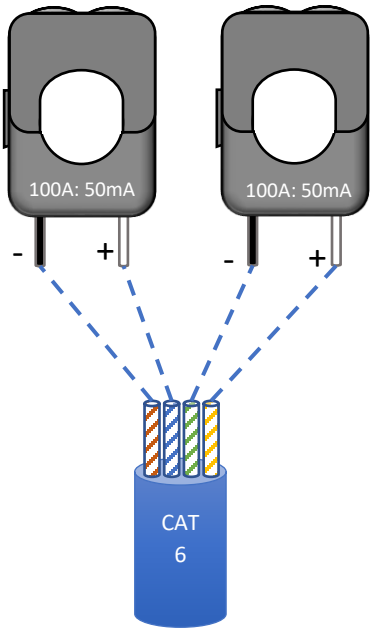

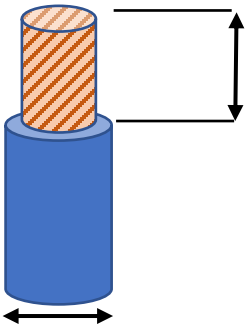

6.35mm

20 AWG Max

All Sensor Inputs

0’ – 10’: 24 AWG

10’ – 100’: 23 AWG CAT 6

Extensions for Limiter Sensors must be twisted pair

(Shielded CAT6 Recommended)

Parallel System Application Note

- Communication lines must be connected between parallel units as shown in the wire diagrams section
  - CAT 6 may be used for this purpose (Shielded cable is preferred)
- Program all units to “Parallel” in the basic setup screen under the parallel tab
  - Set one system to “Master” and give it address 1
  - Set all others to “Slave” and addresses 2,3,4…
  - Only pick phases for 120V/208V instillations
  - Power up slaves first then master
    - You will get an F46 error (Parallel_Aux_fault) until both slaves and master are on.
- Note: F01 Air Switch Faults are almost always an issue with communications. Or one of the systems is off.
- All systems in parallel must be connected to the same battery bank via their own battery connections
- If using a generator, if must be connected in the same way to all systems in parallel
- **Note: The values shown on the home screen of each system represent each system’s contribution not the total of the array.**
- If an error or fault occurs on any one unit, all units will shut down. They will automatically attempt to restart up to 5 times before requiring a manual restart. If a manual restart is necessary, first resolve the issue that caused the shutdown. For this reason, we recommend the use of a bypass switch for large installs (as shown in the diagrams section).
  - A manual restart requires powering down the system (no PV, no Grid, Main button off) for 30s. Then power back up.
- <u>Systems = 1 @ 208V (note: CT sensors point towards Sol-Ark in 208V)</u>
  - Master Ph A Modbus=1: Inv_L2 = Grid_L2 + Inv_L1 = Grid_L1
  - Power to Grid: 4.5KW x 2 Legs
  - Power from Battery: 4KW x 2 Legs
- <u>Systems = 2 @ 208V (note: CT sensors point towards Sol-Ark in 208V)</u>
  - Master Ph A Modbus=1: Inv_L2 = Grid_L2 + Inv_L1 = Grid_L1
  - Master Ph B Modbus=2: Inv_L2 = Grid_L3 + Inv_L1 = Grid_L2
  - 9KWx2 Power to Grid: 4.2KW + 4.8KW & 4.8KW + 4.2KW
  - 8KWx2 Power from Battery: 3.2KW + 4.8KW & 4.8KW + 3.2KW
- <u>Systems = 3 @ 208V (note: CT sensors point towards Sol-Ark in 208V)</u>
  - Master Ph A Modbus=1: Inv_L2 = Grid_L2 + Inv_L1 = Grid_L1
  - Master Ph B Modbus=2: Inv_L2 = Grid_L3 + Inv_L1 = Grid_L2
  - Master Ph C Modbus=3: Inv_L2 = Grid_L1 + Inv_L1 = Grid_L3
  - 9KWx3 Power to Grid: 4.5KW + 4.5KW & 4.5KW + 4.5KW & 4.5KW + 4.5KW
  - 8KWx3 Power from Battery: 4KW + 4KW & 4KW + 4KW & 4KW + 4KW
- If adding any, must add 3 systems to 6.
  - Master Ph A Modbus=1
  - Slave Ph A Modbus=2
  - Master Ph B Modbus=3
  - Slave Ph B Modbus=4
  - Master Ph C Modbus=5
  - Slave Ph C Modbus=6

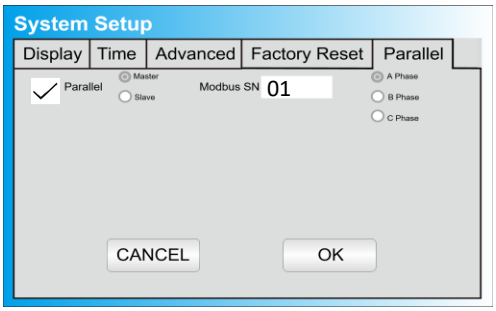

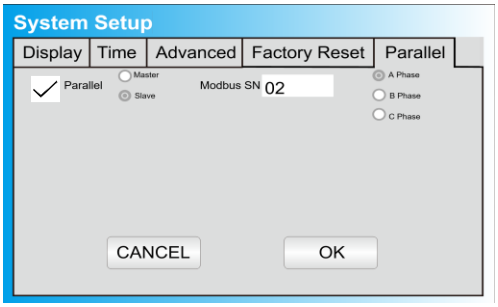

9 Systems @ 208V

Master Ph A Modbus=1	Slave Ph A Modbus=2
Slave Ph A Modbus=3	Master Ph B Modbus=4
Slave Ph B Modbus=5	Slave Ph B Modbus=6
Master Ph C Modbus=7	Slave Ph C Modbus=8
Slave Ph C Modbus=9	

Stacking Sol-Ark 12K @ 120V/240V Outputs

Parallel 12Ks	Continuous On Grid (kW)	Continuous Off Grid (kW)	Pass Through (kW)	Peak 5sec (KW)
1	9	8	12	20
2	18	16	24	36
3	27	24	36	51
4	36	32	48	64
5	45	40	60	75
6	54	48	72	84
7	63	56	84	91
8	72	64	96	96

Stacking Sol-Ark 12K @ 120V/208V Outputs

Parallel 12Ks	Continuous On Grid (kW)	Continuous Off Grid (kW)	Pass Through (kW)	Peak 5sec (KW)
1*	9	8	12	20
2**	18	16	24	36
3	27	24	36	51
4	NA	NA	NA	NA
5	NA	NA	NA	NA
6	54	48	72	84
7	NA	NA	NA	NA
8	NA	NA	NA	NA
9	81	72	108	108

*Two phases only **Three phases but unbalanced (4.8kW, 6.2kW, 4.8kW)

Compatibility Reference Guide

(This list is for reference only and is not exhaustive)

- Rapid Shutdown:
  - String Level
    - Midnite MNLSOB-R1-600
  - Module Level
    - TIGO TS4-A-O
    - TIGO TS4-A-F
    - TIGO TS4-O
    - TIGO TS4-O-DUO
  - Disconnect / Transfer Switches
    - 200A Non-Fused Transfer Switch Model # TC10324R (GE)
    - 200A Fused Transfer Switch Model #DG224NRK (Eaton)
  - PV Fuses
    - 15A PV MC4 in-line fuse holder (ZOOKOTO or DPJ)

MODBUS/RJ45 Application Note

<u>Use the information below at your own risk, any damage cause by the improper use of the communications protocols will not be cover by warranty.</u>

MODBUS
Pin 1 or 8 is RS485-B (Data -)
Pin 2 or 7 is RS485-A (Data +)
Pin 3 or 6 is GND
Baud 9600
8bits data
One stop bit, no parity
Does not require termination

CANBUS
Pin 2 is ground
Pin 4 is CAN High
Pin 5 is CAN Low

If you set Lithium batt = 03, Blue Ion and EGauge (MODBUS)
If you set Lithium batt = 00, Discover Lynk (CANBUS)
If you set Lithium batt = 01, you get a response for batt communication.
If you set Lithium batt = 00, the inverter is a slave and external device is the master.

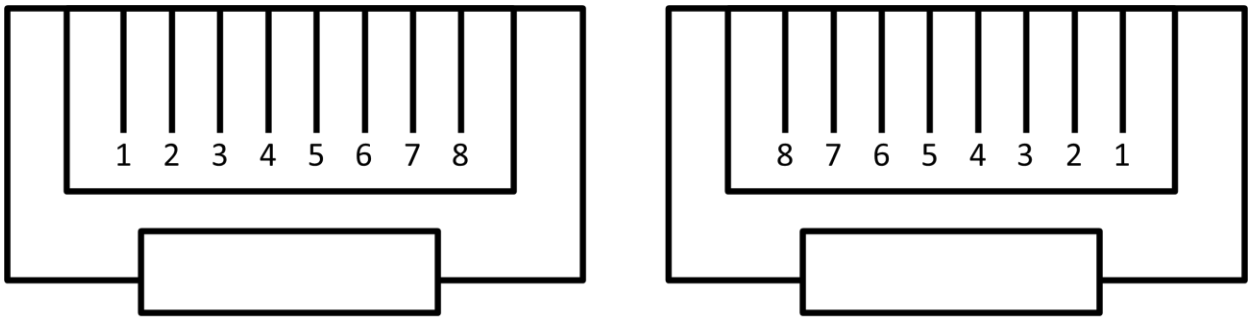

End View　　Looking Into Connector

Sol-Ark 12K Torque Values Application Note

Load Breaker	26.5 IN Lbs	3 NM
Grid Breaker	26.5 IN Lbs	3 NM
Gen Breaker	26.5 IN Lbs	3 NM
Neutral / Ground Busbars	26.5 IN Lbs	3 NM
Cover Screws	26.5 IN Lbs	3 NM
Battery Connection	480 IN Lbs	54 NM

Portable Generator / AC Coupling / SmartLoad Diagram

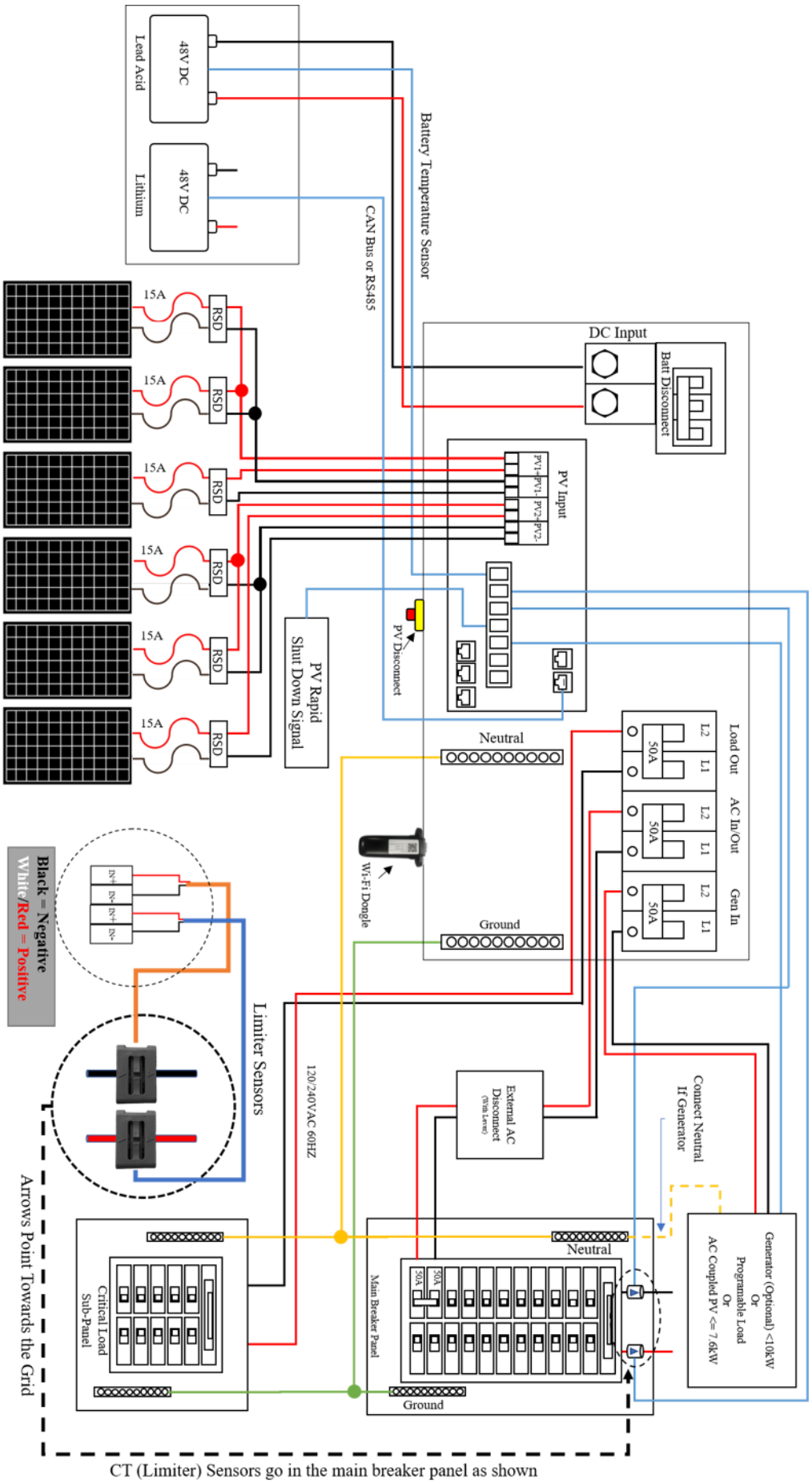

Note: PV fuses are only required for >2 strings per MPPT

Diagram 1

Install w/ Whole Home Generator Diagram

Note: PV fuses are only required for >2 strings per MPPT

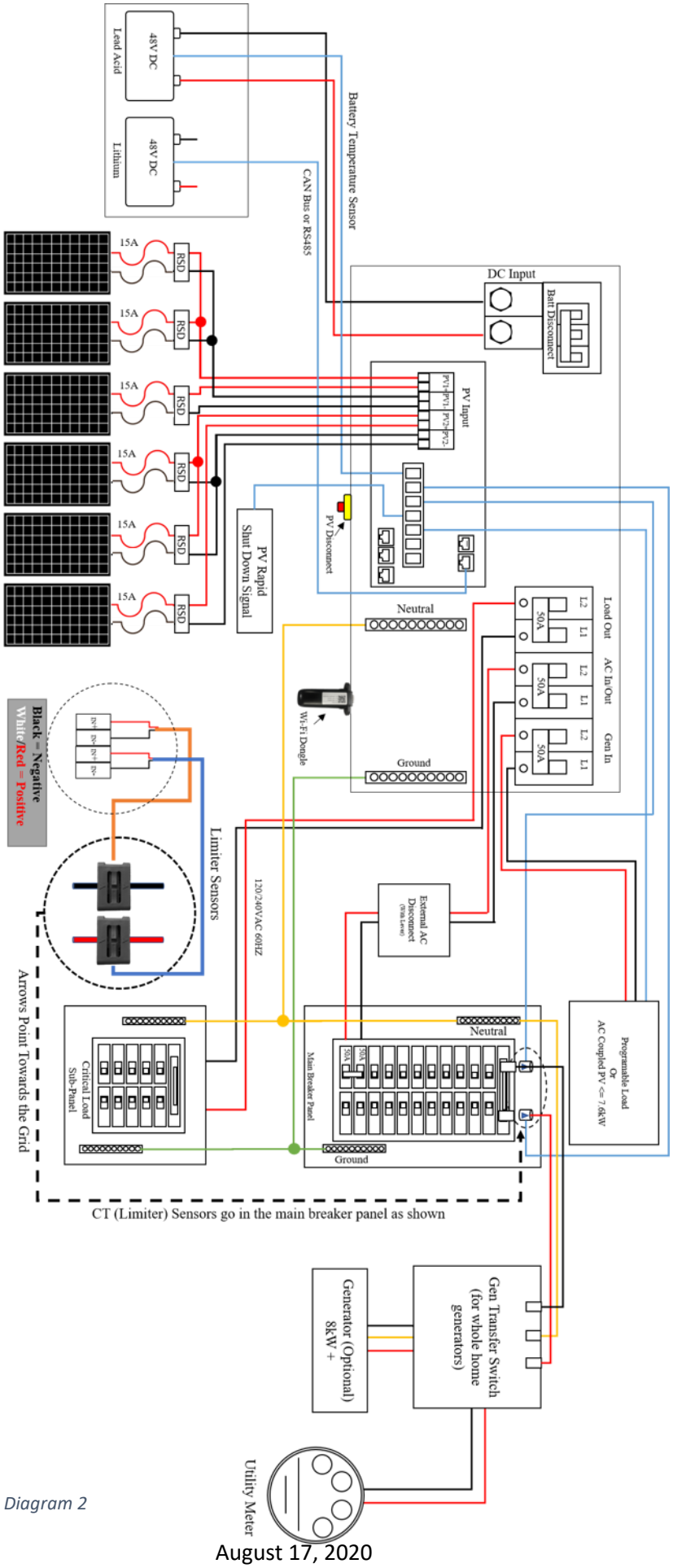

Diagram 2

Line Side Tap Example

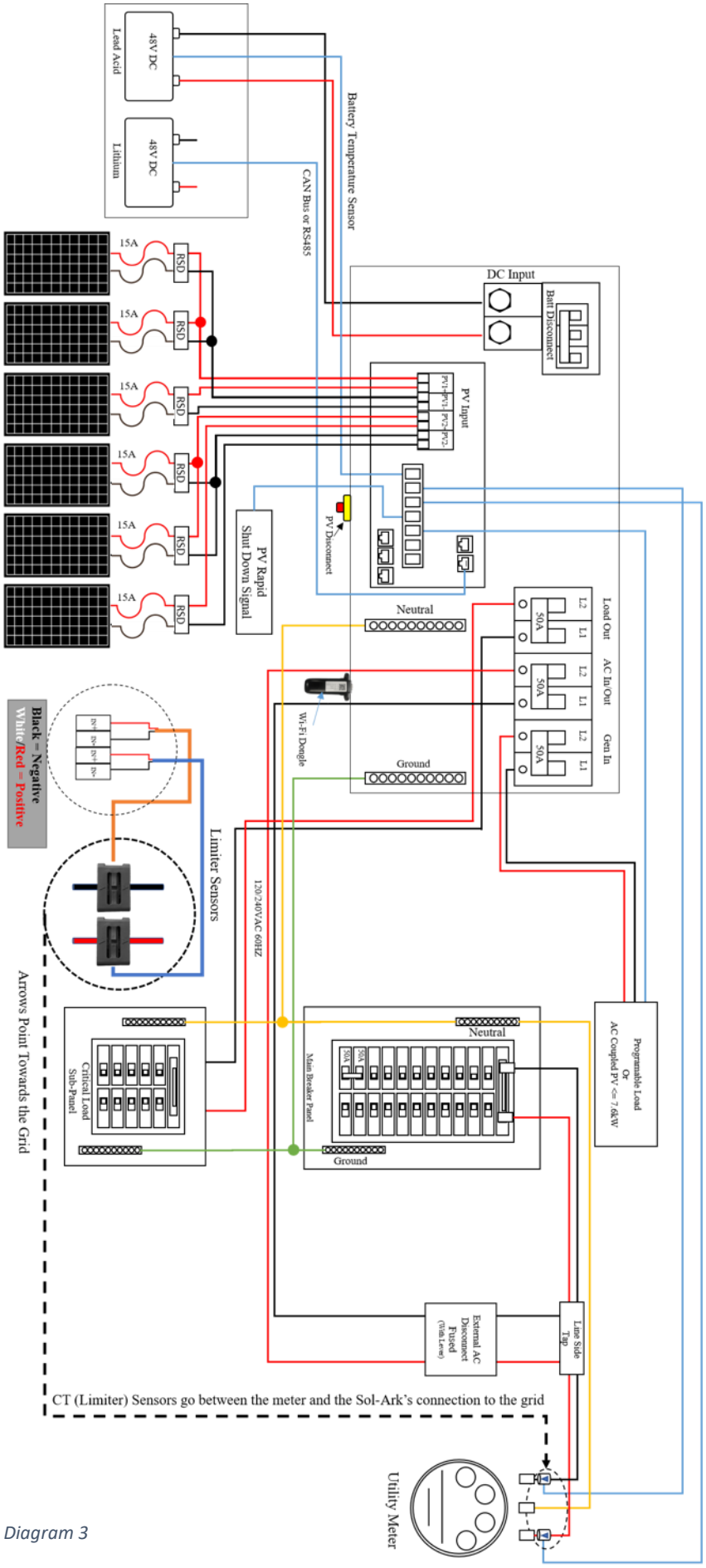

Diagram 3

Note: PV fuses are only required for >2 strings per MPPT

Load Side AC Coupling Example

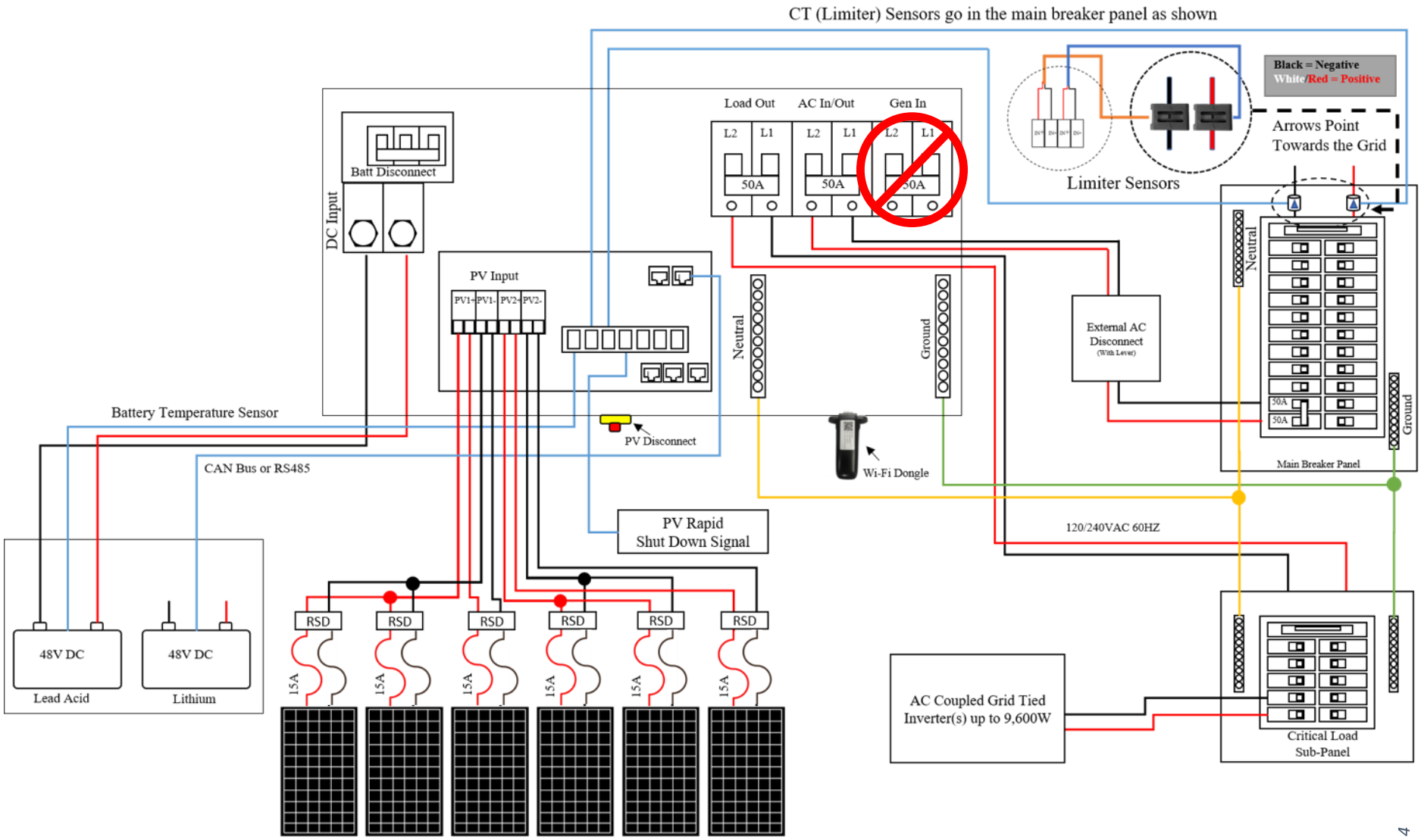

Note: PV fuses are only required for >2 strings per MPPT

Note: Before powering up Multi-System installs please see Multi-system app note

Sol-Ark 12K Parallel Stacking Wire Diagram (2 @ 120/240V)

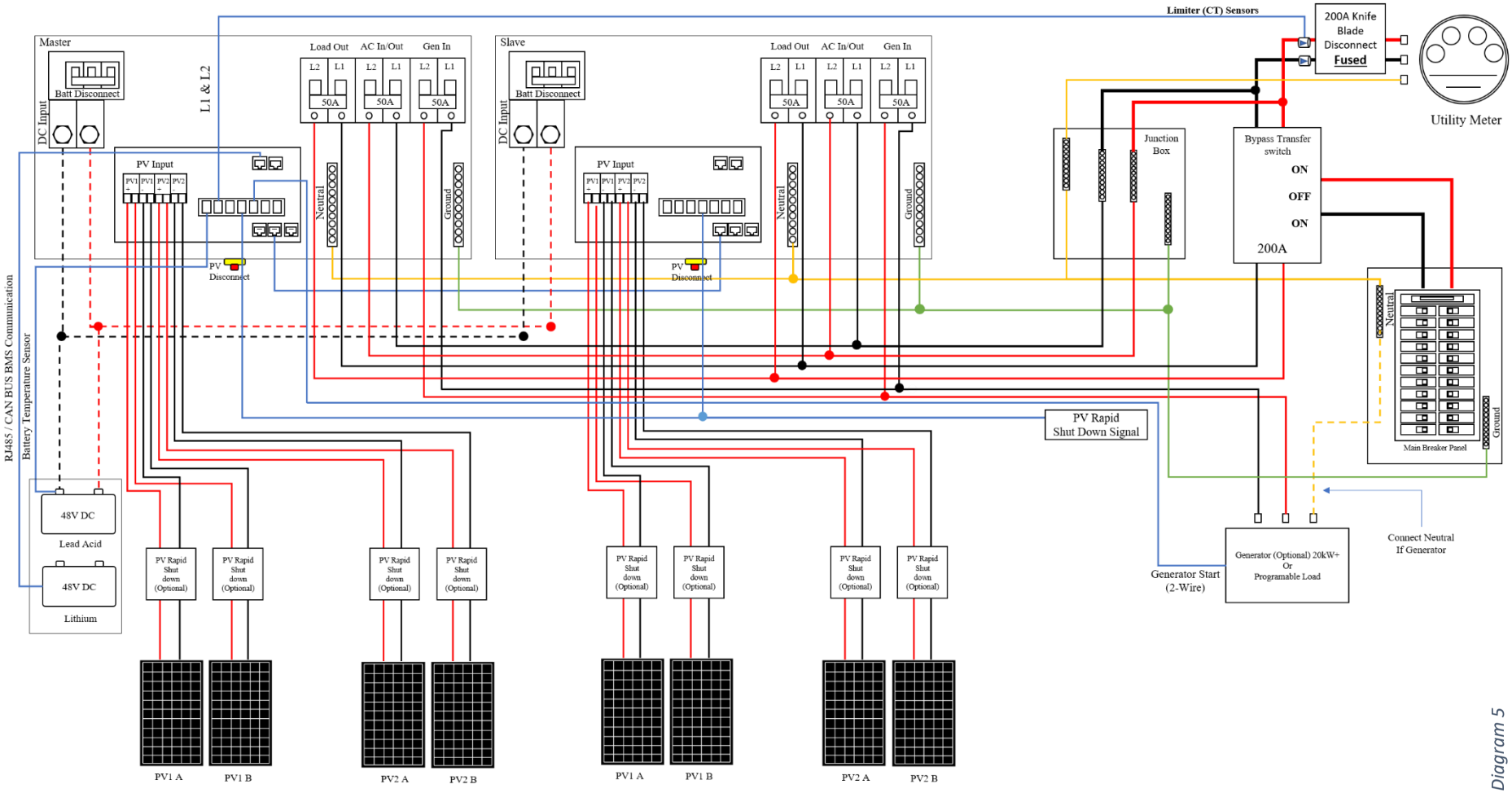

Diagram 5

Note: Before powering up Multi-System installs please see Multi-system app note

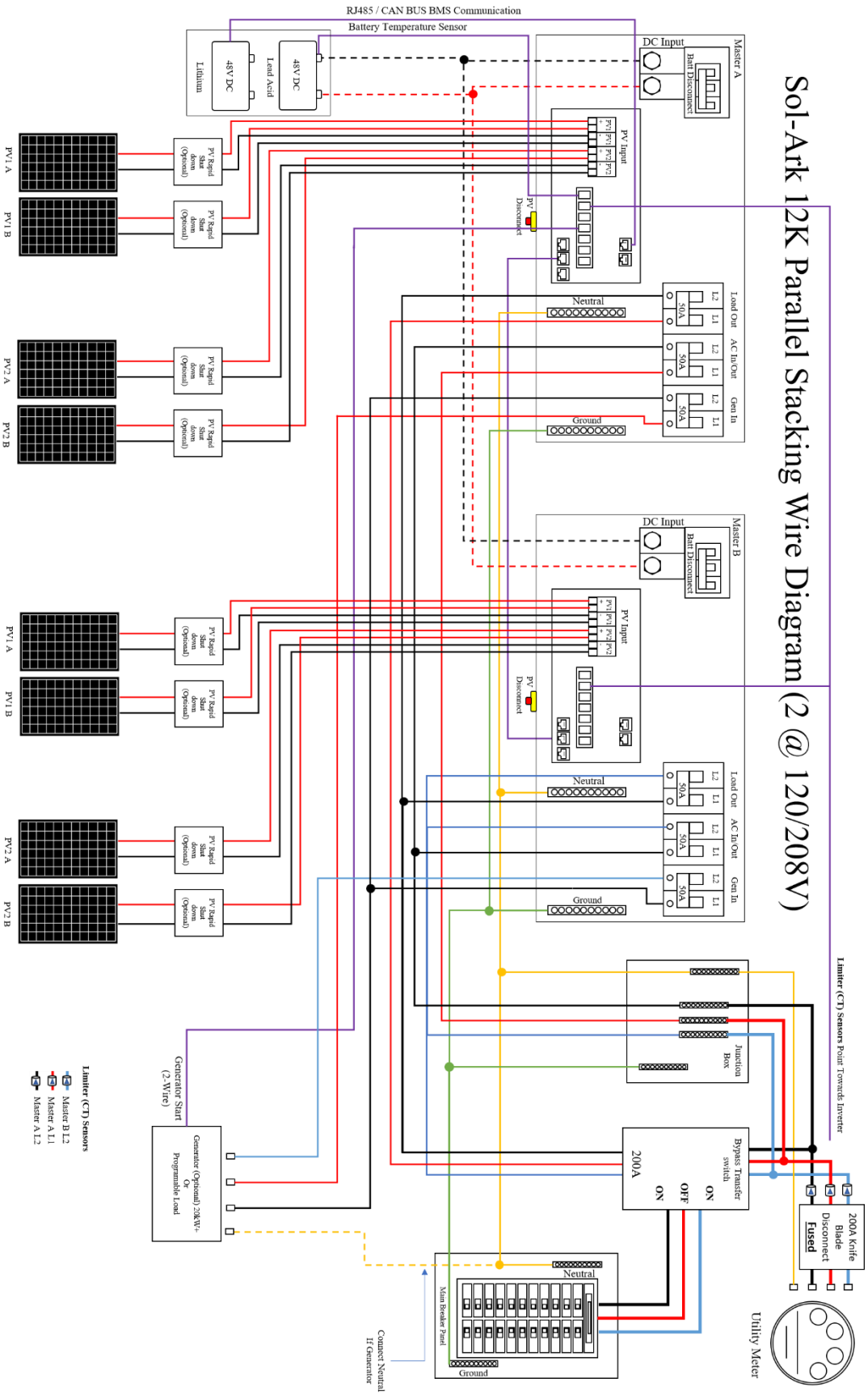

Diagram 6

Note: Before powering up Multi-System installs please see Multi-system app note

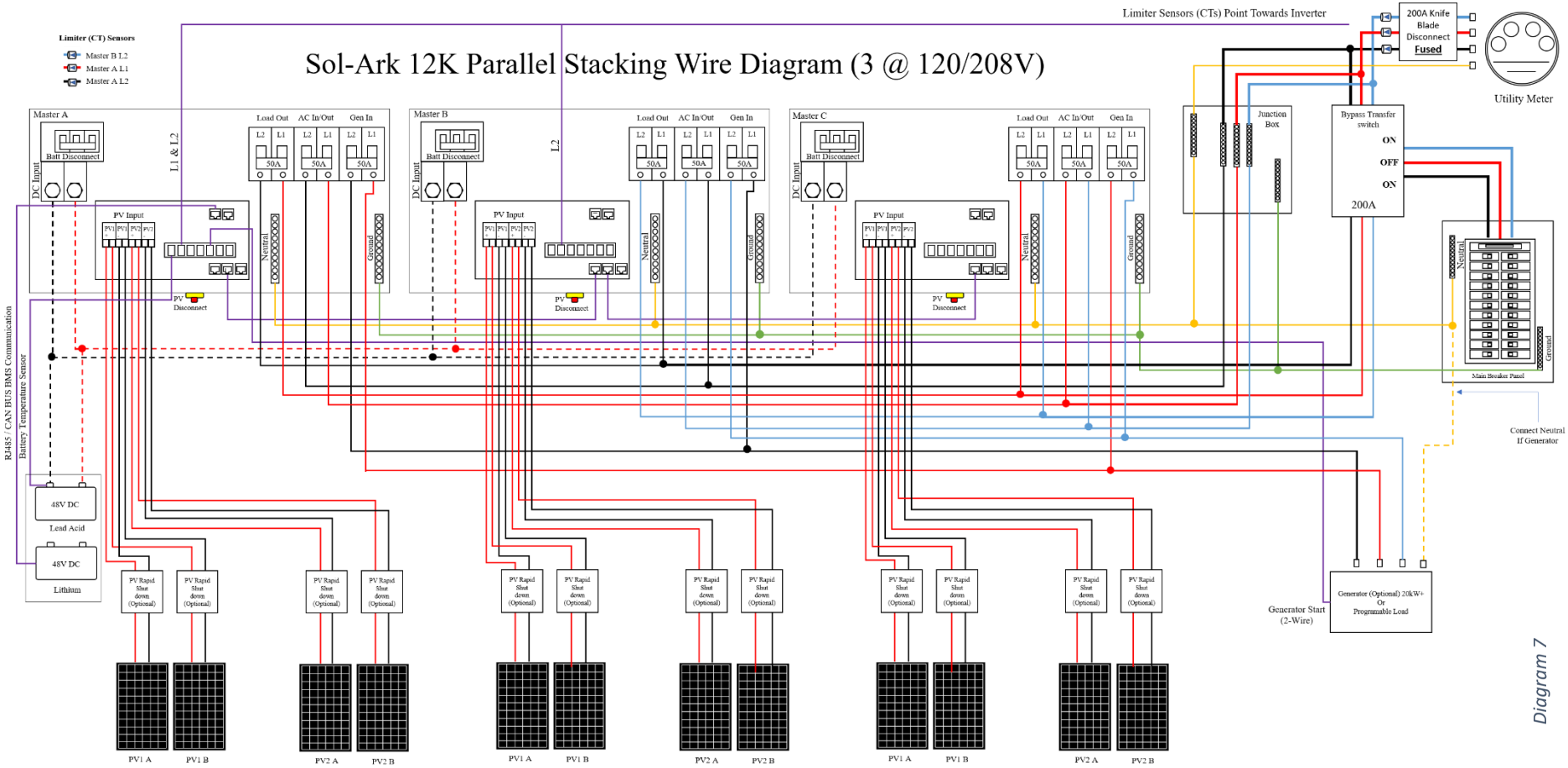

Diagram 7

August 17, 2020

Note: Before powering up Multi-System installs please see Multi-system app note

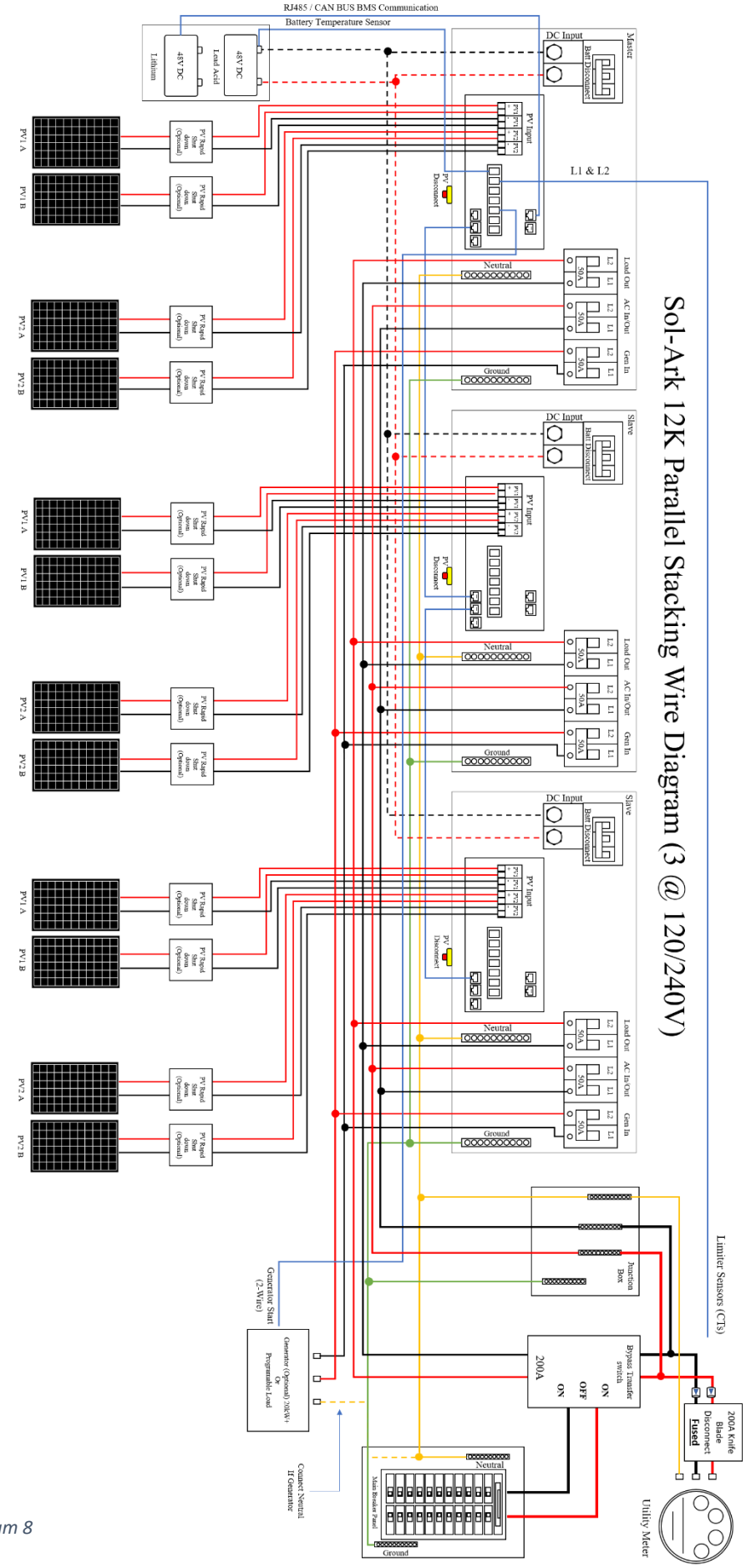

Diagram 8

Note: Before powering up Multi-System installs please see Multi-system app note

Sol-Ark 12K Wire Diagram (3 @ 120/208V w/ AC Coupling)

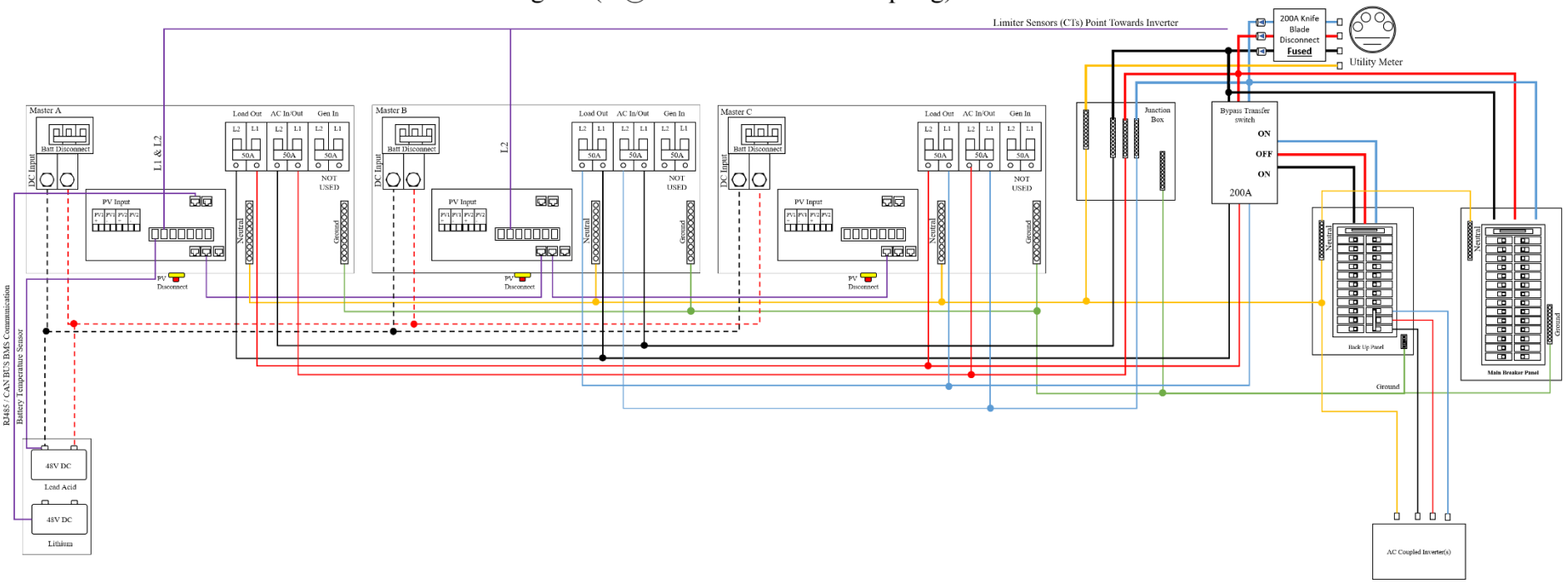

Diagram 9

Sol-Ark 12K Install Operational Verification Checklist Questionnaire

<u>For installer to complete after system is operational. Purpose is to protect installer, homeowner, and inverter.</u>

1. Is the 12K installed in a location protected from water and has 6" clearance left and right for cooling (12" between parallel systems)? **Y/N**
2. Are all the battery lugs tightened? **Y/N**
3. 12K should be connected to Grid, 12K 50A load/Grid breakers on, batteries connected, PV input on and ON button on. Leaving all 10 transfer switches on Line/Grid, test circuit only one at a time to Gen/Solar and then back to Line. Wiring should be correct if you do all 10 to verify no breakers pop or inverter overload.
    a. Did any breakers trip? **Y/N**
    b. Did inverter overload? **Y/N**
    c. Set all switches to Gen/Solar.

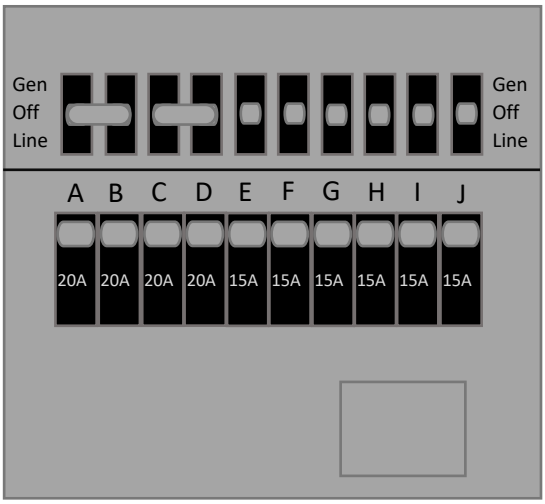

4. If you have problems, please take pictures of these and email to: sales@ Sol-Ark.com
    a. Battery icon screen, showing detailed voltages (the screen shown below)
    b. Sol-Ark 12K with batteries and of user wiring area
5. Load and solar test
    a. Did you do this entire section with the customer to explain the home screen and the detailed voltages screen? **Y/N**
    b. Press the battery icon for the detailed voltages screen.
    c. Is batt temp sensor working? **Y/N**
    d. Turn on many loads for the critical circuits. Are solar panels producing enough power to match the load (provided there is enough sun)? **Y/N**
    e. **Verify** screen in limited power to loads mode (default). Are both Grid Home measurements positive? **Y/N**

    f. Program Full Grid sell mode. If there are enough panels and sun or light loads in the entire house, the Grid HM measurements will be negative on both L1/L2. Are they negative (solar selling back to grid)? **Y/N**
    g. Program limited power to home mode. The Grid HM sensors will be near zero or slightly positive. Are they both near zero and cancelling out the whole home power? **Y/N**
    h. You have verified the limit sensors are correctly installed. If MCU Software is 1664 or higher, an auto learn function corrects any mistakes in limiter wiring. Program in the correct Grid mode the customer will use.
6. Did you program the correct Ah for battery bank and ~20% max Amps charge/discharge? **Y/N**
7. Did you program the correct battery charge voltages for your battery type? **Y/N**
8. Turn off the AC breaker so 12K is operating in off grid mode for several minutes. Are appliances still powered? **Y/N**

9. Turn off PV input, running only on batteries for several minutes. Are appliances still powered? **Y/N**

In Limited To Home Mode HM values will be close to zero. HM values should never be negative. If negative, the Limiter Sensors are not installed properly.

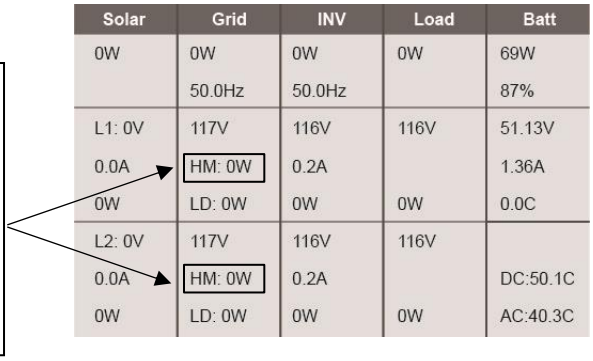

Solar	Grid	INV	Load	Batt
0W	0W	0W	0W	69W
	50.0Hz	50.0Hz		87%
L1: 0V	117V	116V	116V	51.13V
0.0A	HM: 0W	0.2A		1.36A
0W	LD: 0W	0W	0W	0.0C
L2: 0V	117V	116V	116V	
0.0A	HM: 0W	0.2A		DC:50.1C
0W	LD: 0W	0W	0W	AC:40.3C

10. Turn on PV input and AC Grid inputs.
11. Did you setup Wi-Fi plug to the customer's internet? **Y/N**
12. Absolutely important for software updates. Did you help customer register system on Monitoring App? **Y/N**
13. Does customer have a standby generator or small portable generator? **Y/N**
    a. Did you turn off UL1741/IEEE1547 (use General Standard) and reprogram grid freq range to 53-65Hz? **Y/N**
    b. If standby generator, are the current limit sensors on the Grid side of the generator transfer switch? **Y/N**
    c. If small gas generator using Gen inputs, did you enable Gen charging and properly set charge current? **Y/N**
14. If EMP protected, did you install EMP Suppressors on critical appliance cords? **Y/N**

_____	_____	_____
Installer Name	Installer Signature	Date

_____	_____	_____
Customer Name	Customer Signature	Date

Limited Warranty: Sol-Ark 12K Hybrid Inverter

10-Year Limited Warranty for SOL-ARK (Portable Solar LLC) Products. Sol-Ark provides a Ten-year (10) limited warranty ("Warranty") against defects in materials and workmanship for its Sol-Ark products ("Product"). The term of this Warranty begins on the Product(s) initial purchase date, or the date of receipt of the Product(s) by the end user, whichever is later. This must be indicated on the invoice, bill of sale from your installer. This Warranty applies to the original Sol-Ark Product purchaser and is transferable only if the Product remains installed in the original use location. Please call Sol-Ark to let us know if you are selling your home and give us name and contact of the new owner.

The warranty does not apply to any Product or Product part that has been modified or damaged by the following:

- Installation or Removal (examples: wrong voltage batteries, connecting batteries backwards, damage due to water/rain to electronics, preventable damage to solar wires.)
- Alteration or Disassembly
- Normal Wear and Tear
- Accident or Abuse
- Unauthorized Firmware updates/software updates or alterations to the software code
- Corrosion
- Lightning: unless using EMP hardened system, then Portable Solar will repair product
- Repair or service provided by an unauthorized repair facility
- Operation or installation contrary to manufacturer product instructions
- Fire, Floods or Acts of Nature
- Shipping or Transportation
- Incidental or consequential damage caused by other components of the power system
- Any product whose serial number has been altered, defaced or removed
- Any other event not foreseeable by Portable Solar, LLC

Sol-Ark (Portable Solar LLC) liability for any defective Product, or any Product part, shall be limited to the repair or replacement of the Product, at Portable Solar LLC discretion. Sol-Ark does not warrant or guarantee workmanship performed by any person or firm installing its Products. This Warranty does not cover the costs of installation, removal, shipping (except as described below), or reinstallation of Products or parts of Products. LCD screen and fans are covered for 5 years from date of purchase.

THIS LIMITED WARRANTY IS THE EXCLUSIVE WARRANTY APPLICABLE TO SOL-ARK (PORTABLE SOLAR LLC) PRODUCTS. SOL-ARK EXPRESSLY DISCLAIMS ANY OTHER EXPRESS OR IMPLIED WARRANTIES OF ITS PRODUCTS. SOL-ARK ALSO EXPRESSLY LIMITS ITS LIABILITY IN THE EVENT OF A PRODUCT DEFECT TO REPAIR OR REPLACEMENT IN ACCORDANCE WITH THE TERMS OF THIS LIMITED WARRANTY AND EXCLUDES ALL LIABILITY FOR INCIDENTAL OR CONSEQUENTIAL DAMAGES, INCLUDING WITHOUT LIMITATION ANY LIABILITY FOR PRODUCTS NOT BEING AVAILABLE FOR USE OR LOST REVENUES OR PROFITS, EVEN IF IT IS MADE AWARE OF SUCH POTENTIAL DAMAGES.

Return Policy - **No returns will be accepted without prior authorization** and must include the Return Material Authorization (RMA) number. Please call and talk to one of our engineers to obtain this number at 972-575-8875.

Return Material Authorization (RMA) A request for an RMA number requires all of the following information: 1. Product model and serial number; 2. Proof-of-purchase in the form of a copy of the original Product purchase invoice or receipt confirming the Product model number and serial number; 3. Description of the problem; 4. Validation of problem by Technical Support, and 5. Shipping address for the repaired or replacement equipment. Upon receiving this information, the Sol-Ark representative can issue an RMA number.

Any product that is returned must be brand new, in excellent condition and packaged in the original manufacturer's carton with all corresponding hardware and documentation. Returns must be shipped with prepaid freight and insured via the carrier of your choice to arrive back at Portable Solar within 30 days of your initial delivery or pick-up. **Shipping charges will not be refunded**.

All returns are subject to a 35% restocking fee. **No returns will be accepted beyond 30 days of original delivery.** The value and cost of replacing any items missing (e.g. parts, manuals, etc.) will be deducted from the refund. If you have any questions regarding our return policy, please email us at sales@sol-ark.com or call us at the number above during regular (M-F) business hours.

Sol-Ark 12K Install Operational Verification Checklist Questionnaire must be filled out, signed, and dated to secure full warranty coverage.