March 25, 1969 J. F. KINNEY 3,434,350

COMPENSATED TEMPERATURE SENSOR

Filed March 10, 1967 Sheet 1 of 3

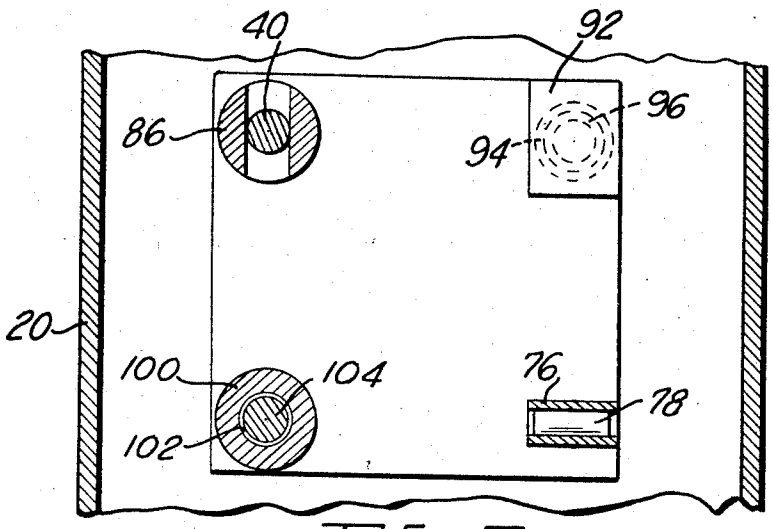

Fig. 2

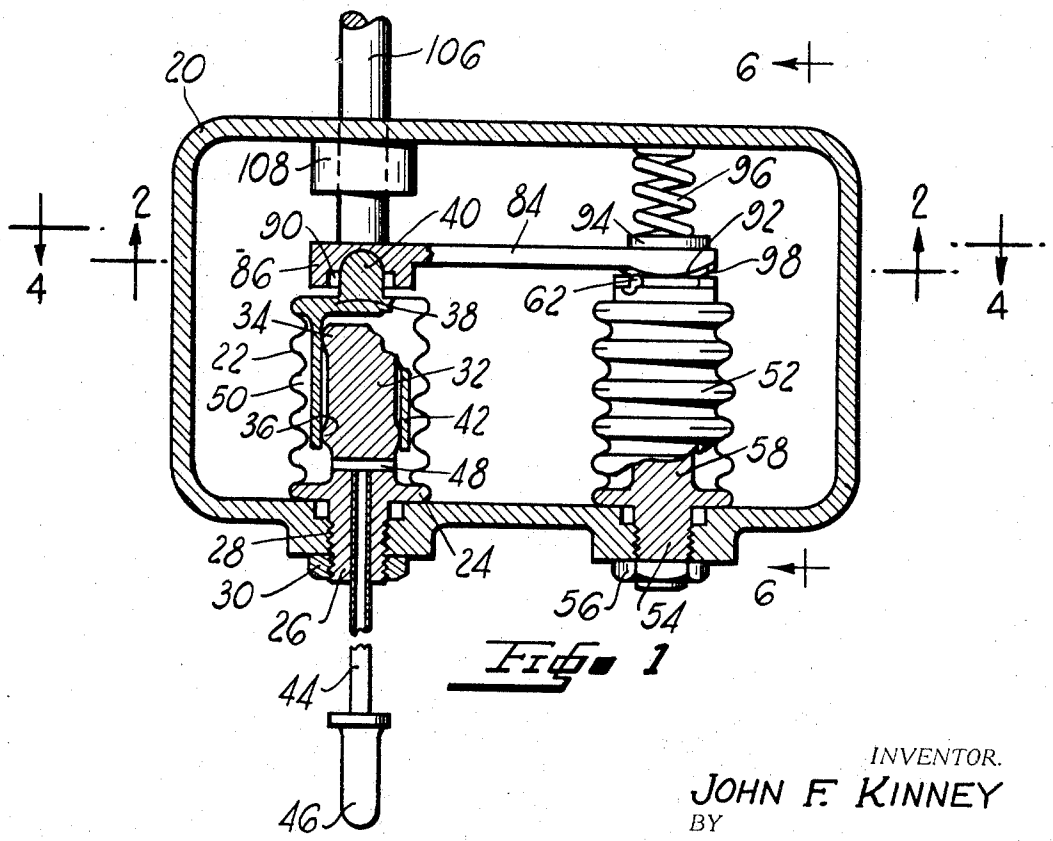

Fig. 1

INVENTOR.
JOHN F. KINNEY
BY
Gordon H. Chaney
AGENT

March 25, 1969 J. F. KINNEY 3,434,350

COMPENSATED TEMPERATURE SENSOR

Filed March 10, 1967 Sheet 2 of 3

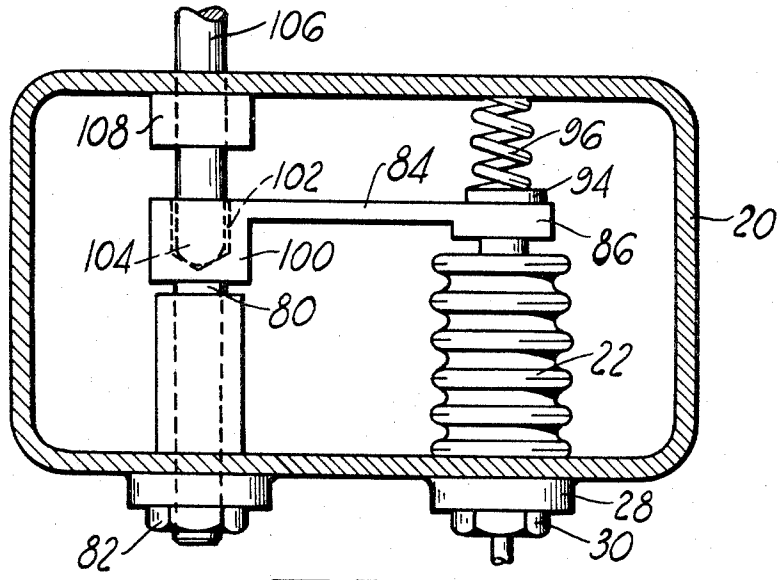

Fig. 3

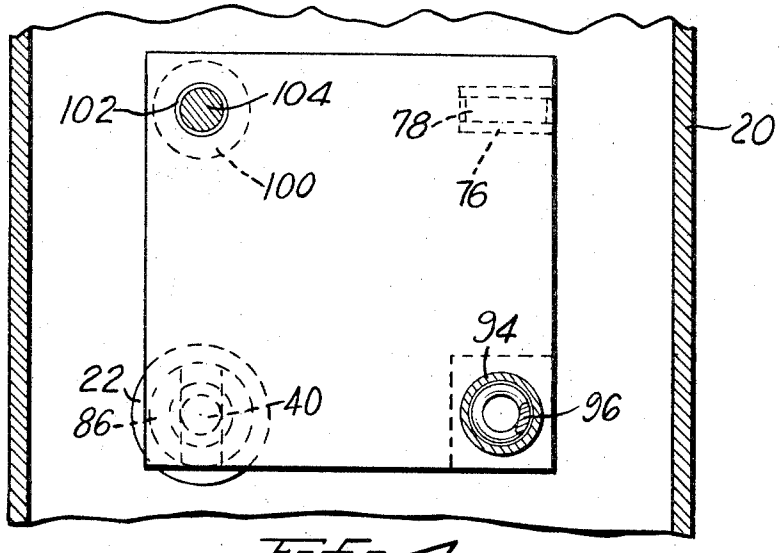

Fig. 4

INVENTOR.
JOHN F. KINNEY
BY
Gordon N. Cheney
AGENT

March 25, 1969 J. F. KINNEY 3,434,350

COMPENSATED TEMPERATURE SENSOR

Filed March 10, 1967 Sheet 3 of 3

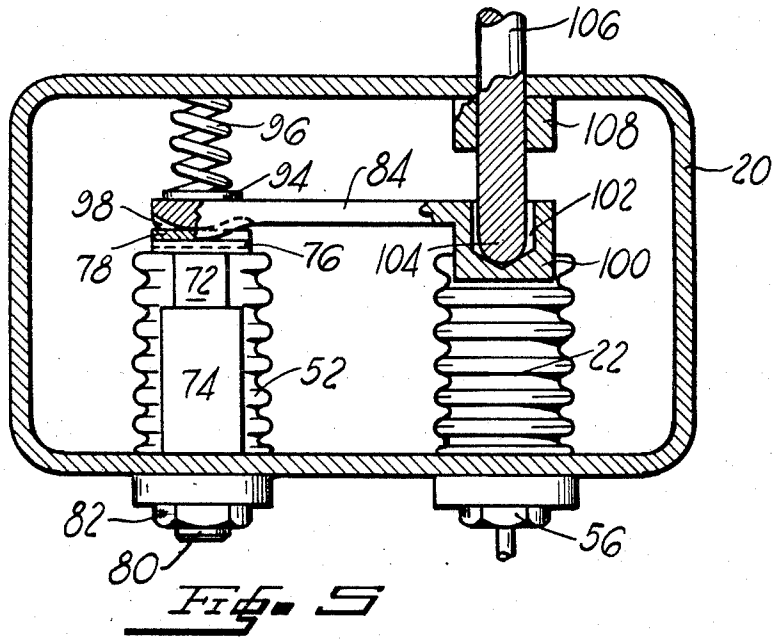

Fig. 5

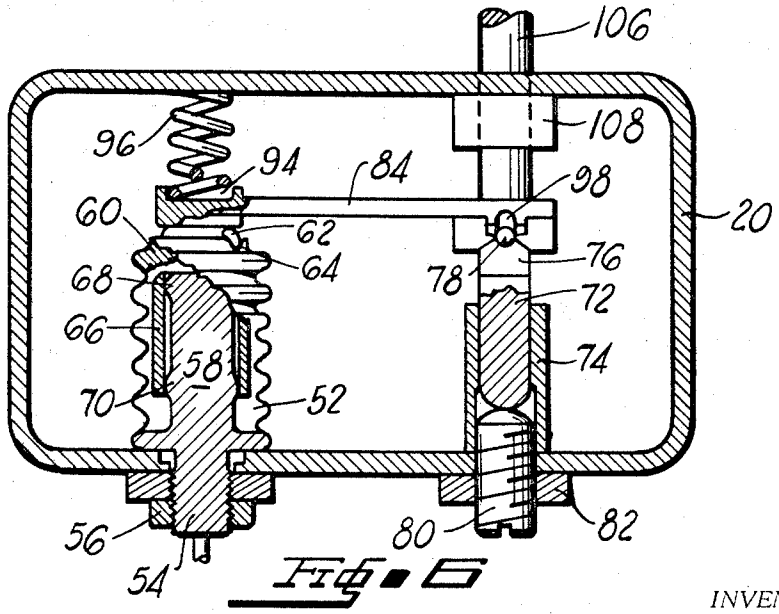

Fig. 6

INVENTOR.
JOHN F. KINNEY
BY
Gordon N. Cheney
AGENT

United States Patent Office 3,434,350 Patented Mar. 25, 1969

3,434,350

COMPENSATED TEMPERATURE SENSOR

John F. Kinney, South Bend, Ind., assignor to The Bendix Corporation, a corporation of Delaware

Filed Mar. 10, 1967, Ser. No. 622,238
Int. Cl. G01k 1/20
U.S. Cl. 73—362.4 7 Claims

ABSTRACT OF THE DISCLOSURE

A temperature responsive device having a positionable output member connected to a pair of liquid filled temperature responsive bellows, one of which is a motor bellows responsive to a variable input temperature and the temperature of an environmental fluid and connected to actuate the positionable output member in response to the variable input temperature signal and the other of which is a compensated bellows responsive to the temperature of the environmental fluid and connected to compensate for the temperature effect of the environmental fluid on the motor bellows.

Background of the invention

This invention relates to temperature responsive devices of the fluid filled bellows type having a probe exposed to the sensed temperature.

In conventional temperature responsive devices of the abovementioned type, the liquid filled motor bellows may be contained in a housing in which fluid such as liquid fuel in the case of a fuel control system for a combustion engine or air in the case of a pneumatic system circulates around the liquid filled motor bellows. Variations in the temperature of the surrounding fluid as well as the temperature to which the probe is subjected results in predetermined variations in the volume of the liquid filling the motor bellows which, in turn, results in corresponding movement of the movable end of the motor bellows and thus the positionable output member connected thereto. Therefore, the temperature of the fluid surrounding the motor bellows, unless compensated for, introduces an error in the response of the motor bellows such that position of the output member is not truly representative of the temperature to which the probe is subjected. Reference is made to Patent No. 3,177,720, issued Apr. 13, 1965, in the name of Lowell A. Metheny (common assignee) for a showing of a compensating bellows arrangement whereby the abovementioned undesirable effect of temperature variations of a fluid surrounding a motor bellows may be eliminated. The present invention is an improvement over the temperature compensating apparatus of said patent in that, in addition to compensating for the temperature effect of the fluid surrounding the motor bellows, the present invention also compensates for deviations in volume ratio between the motor bellows and compensator bellows. It will be recognized that an error resulting from such deviations is proportional to the variation in volume ratio from the design nominal volume ratio of the motor bellows and compensator bellows which error is at a maximum when the temperature of the fluid surrounding the bellows and the probe temperature are at opposite extremes.

Summary of the invention

It is an object of the present invention to provide temperature responsive control apparatus having a movable output member actuated by a fluid filled bellows as a predetermined function of a variable input temperature signal applied to the liquid filling the bellows irrespective of temperature variations in an environmental fluid surrounding the bellows.

It is another object of the present invention to provide simple and reliable temperature compensating apparatus for obviating the effect of environmental temperature changes on a liquid filled temperature responsive bellows connected to receive a variable temperature input signal and actuate a movable output member reliably and accurately as a function of the variable temperature input signal.

It is an important object of the present invention to provide temperature responsive control apparatus wherein a movable output member is caused to assume a specific position for each specific temperature sensed by a probe connected interiorly to a liquid filled bellows irrespective of temperature changes of a fluid surrouding the bellows.

Other objects and advantages will become apparent from the following description taken in conjunction with the accompanying drawings wherein:

Brief description of the drawings

FIGURE 1 represents a front view in partial section of the present invention;

FIGURE 2 represents a view taken on line 2—2 of FIGURE 1;

FIGURE 3 represents a left side view of the present invention;

FIGURE 4 represents a view taken on line 4—4 of FIGURE 1;

FIGURE 5 represents a rear view in partial section of the present invention;

FIGURE 6 represents a view taken on line 6—6 of FIGURE 1.

Description of the preferred embodiment

Referring to the drawings, numeral **20** designates a casing containing fluid subject to variable temperature. A motor bellows **22** is supported for axial expansion or contraction relative to casing **20** by an anchor member **24** fixedly secured to one end of bellows **22** by any suitable means such as brazing or the like providing a fluid tight connection. A threaded extension **26** of anchor member **24** extends through an opening **28** in casing **20** into engagement with a lock nut **30** which is tightened to fixedly secure anchor member **24** in position against casing **20**. An integral circular guide member **32** having spaced apart ribs **34** and **36** extends from anchor member **24** into bellows **22** which is axially aligned therewith. A cap **38** fixedly secured to bellows **22** by any suitable means, such as brazing, to provide a fluid tight connection is provided with a centrally located stem **40** and an oppositely extending cylinder portion **42** which is axially aligned with guide member **32** slidable therewith. The guide member **32** guides cylinder **42** and thus bellows **22** axially thereby avoiding any tendency of the bellows **22** to buckle under load. The guide member **32** is suitably bored axially to receive one end of a capillary tube **44** which is attached at its opposite end to a temperature probe **46**. A diametrically extending passage **48** in guide member **32** communicates the interior of tube **44** with the annular space **50** defined by bellows **22** and guide member **32**. The bellows **22**, tube **44** and probe **46** are filled to capacity with a suitable liquid in the connectional manner of such temperature responsive devices. In general, the probe **46** is located to sense the temperature of some desired medium and in response to variations in the temperature of the medium the volume of the liquid within bellows **22** is caused to vary accordingly which, in turn, causes the bellows **22** to expand or contract depending upon the relative change in temperature of the medium.

A compensator bellows **52** is secured to casing **20** in spaced apart relationship to motor bellows **22** by an anchor member **54** and associated lock nut **56** threadedly

engaged therewith. An integral guide member **58** extends from anchor member **54** into bellows **52** which is axially aligned therewith. A cap **60** suitably secured to the free end of bellows **52** by any suitable means such as brazing to provide a sealed connection is provided with a bearing surface which may be defined by a rod section **62** fixedly secured in a groove **64** in cap **60** (FIGURES 1 and 6). A cylinder portion **66** of cap **60** axially aligned with guide member **58** is adapted to slide over spaced ribs **68** and **70** formed on guide member **58** thereby guiding bellows **52**. The motor bellows **22** and compensator bellows **52** are selected to contain equal interior fluid volumes at a predetermined temperature condition of probe **46** and are filled with fluid having the same response characteristics to changes in the temperature of the fluid contained by casing **20**.

An adjustable support includes a stem **72** slidably carried in a sleeve **74** and a cross arm **76** recessed to receive a rod section **78** fixedly secured thereto by any suitable means such as a tack weld (FIGURES 2 and 6). The sleeve **74** is fixedly secured at one end to casing **20** by any suitable means such as a weld. A screw member **80** threadedly engaged with casing **20** extends therethrough into engagement with the end of stem **72**. A lock nut **82** threadedly engaged with screw member **78** serves to lock the same in a desired position.

A tiltable table defined by a square plate **84** is supported by the stem **40** and rod sections **62** and **78**. Referring to FIGURES 3 and 4, in particular, one corner of the plate **84** is provided with a boss **86** having a slot or track **88** suitably curved to pivotally accommodate the curved end of stem **40** which bears thereagainst. A recess **90**, FIG. 1, in boss **86** provides clearance for stem **40** to permit relative pivotal movement between plate **84** and stem **40**.

A second corner of plate **84** is provided with a curved bearing surface **92** which rests upon rod portion **62** angularly disposed thereto and is carried by bellows **52**. The bearing surface **92** and rod portion **62** have point contact thereby resulting in rolling action of bearing surface **92** on rod portion **62** in response to relative movement therebetween. The opposite face of plate **84** is recessed as at **94** to retain one end of a compression spring **96** interposed between casing **20** and plate **84** and adapted to load bearing surface **92** into engagement with rod portion **62** (FIGURE 6).

A third corner of plate **84** is provided with an arcuate track portion **98**, best shown in FIGS. 4 and 6, having a suitable cross section radius of curvature to accommodate rod portion **78** bearing thereagainst. The radius of curvature of arcuate track portion **98** is the same as that of the curved bearing surface **92**.

The remaining corner of plate **84** is provided with a boss **100** suitably recessed as at **102**, FIG. 5, to receive a curved end portion **104** of a rod **106**. The radius of recess **102** is sufficiently greater than that of the rod **106** to permit a limited range of tilting motion of plate **84** relative to rod **106**. The rod **106** extends through casing **20** and is slidably carried by a guide **108** fixedly secured to casing **20** by any suitable means such as a weld. Rod **106** provides an output position signal as a function of the temperature sensed by probe **46** and may be suitably attached to control means, not shown, responsive to the position established by rod **106**.

Operation

It will be understood that the probe **46** is exposed to a variable temperature source and the casing **20** is exposed interiorly to a variable tempertaure fluid, either gas or liquid, which surrounds the bellows **22** and **52**. It will be assumed initially that the temperature of the fluid surrounding bellows **22** and **52** is stabilized at some given value and that the temperature sensed by probe **46** increases by a given amount.

Under the above assumed conditions, the increase in temperature at probe **46** results in passage of fluid through capillary tube **44** from probe **46** to the interior of motor bellows **22** which expands accordingly thereby displacing stem **40** upwardly as viewed in FIGURE 1 which, in turn, urges the adjacent corner of plate **84** upwardly. The plate **84** pivots in a clockwise direction as a result of the bearing surface **92** rolling on rod portion **62** and the arcuate track portion **98** rolling on rod portion **78**. The radius of curvature of the bearing surface **92** and the arcuate track portion **98** are equal which, in turn, results in the corner of plate **84** carrying output rod **106** moving with the same magnitude and direction as that of the motor bellows **22** actuating plate **84**. Therefore, the rod **106** moves upwardly, as viewed in FIGURE 1, to provide an output position signal representing the position occupied by plate **84** which as indicated above represents the temperature at probe **46**. It will be noted that a decrease in temperature at probe **46** will result in a contraction of motor bellows **22** which results in counterclockwise movement of plate **84**, as viewed in FIGURE 1, as a result of the rolling action of bearing surface **92** and track portion **98** on the respective rod portions **62** and **78** whereupon the output rod **106** moves downwardly to provide a position signal representing the decreased temperature at probe **46**.

Now, assuming that the temperature of probe **46** remains constant and an increase in temperature of the fluid surrounding bellows **22** and **52** occurs, the bellows **22** and **52** will react accordingly by expanding simultaneously. The plate **84** is lifted by the bellows **22** and **52** and pivots clockwise about the end of rod **106** and rod portion **78**, as viewed in FIGURE 6, about an axis defined by a line through the center of curvature of the end **104** of rod **106** and the center of curvature of rod portion **78** thereby resulting in no output motion of rod **106**. In this manner, the position of rod **106** remains fixed for any given temperature at probe **46** irrespective of the response of motor bellows **22** to changes in temperature of the fluid surrounding the same. It will be noted that a decrease in temperature of the fluid surrounding bellows **22** and **52** will result in a simultaneous contraction of both bellows whereupon the plate **84** will pivot counterclockwise, as viewed in FIGURE 6, about the aforementioned defined axis resulting in zero output motion of rod **106**.

It will be understood that a change in temperature of the fluid surrounding the bellows **22** and **52** results in bellows travel which is proportional to the fluid volume content of the bellows at the instant of the temperature change. The fluid volume inequality between motor bellows **22** and compensator bellows **52** will be at a maximum when the probe temperature is at one extreme while the temperature of the fluid surrounding the bellows **22** and **52** is at the opposite extreme. Compensation for such volume inequality is provided for by means of the curved bearing surface **92** as well as the angular position of rod portion **62** relative to the bearing surface **92**. The radius of curvature of curved bearing surface **92** and the angle of rod portion **62** upon which the bearing surface **92** rides determines the effective lever arm from the center of curvature of rod portion **78** to the point of contact of curved bearing surface **92** and rod portion **62** as well as the effective lever arm from the center of curvature of stem **40** to the point of contact of bearing surface **92** and rod portion **62** for a given length of compensator bellows **52**. It will be assumed that the bellows **22** and **52** are selected with a nominal volume ratio of one at a predetermined temperature of probe **46** which, for instance, may correspond to a temperature midway between the highest and lowest temperatures to which the probe **46** is expected to be exposed. Referring to FIGURE 6, in particular, the bellows **22** and **52** are shown with equal volumes as they would appear in response to the abovementioned predetermined temperature at probe **46**. The tiltable table **84** may be considered substantially perpendicular to the axes of the bellows **22** and **52**.

As pointed out heretofore, a change in temperature at probe **46** will cause an expansion or contraction of bellows **22** depending upon the relative change in probe temperature which results in a volume error between motor bellows **22** and compensator bellows **52**. For instance, the heretofore mentioned increase in volume of motor bellows **22** in response to an increase in probe **46** temperature results in a corresponding volume error between bellows **22** and **52**. Now, if a subsequent increase in temperature of the fluid surrounding bellows **22** and **52** occurs, it will be recognized that the axial expansion of bellows **22** will be greater than the axial response of bellows **52** in response to the rise in temperature of the fluid surrounding the same by virtue of the volume error. The simultaneous expansion of bellows **22** and **52** is partially compensated for by the table **84** tilting about the axis through end **104** and rod portion **78** in the heretofore mentioned manner to prevent movement of output rod **106**. However, the greater axial expansion of bellows **22** relative to bellows **52** tends to tilt table **84** in a clockwise direction, as viewed in FIGURE 1, about the axis defined by the points of contact of arcuate portion **98** and curved bearing surface **92** with rod portion **78** and rod portion **62**, respectively, which clockwise tilting of table **84**, without suitable compensation therefor, will produce undesired displacement of output rod **106** in an upward direction as viewed in FIGURE 1. To compensate for the tendency of table **84** to tilt clockwise in response to bellows **22**, the curved bearing surface **92** which moves relative to rod portion **62** in response to the clockwise tilting of table **84** causes a counterclockwise tilting of table **84** about the center of stem **40** as viewed in FIGURE 1 to reset table **84** thereby eliminating the abovementioned tendency for table **84** to tilt and cause motion of output rod **106**. It will be recognized that the degree to which the motion of curved bearing surface **92** relative to rod portion **62** results table **84** depends upon the contour impressed on curved bearing surface **92** and/or rod portion **62**.

In the event that a decrease in probe **46** temperature reduces the volume of bellows **22** to less than that of bellows **52**, the resulting volume ratio error therebetween will cause the response of bellows **22** to be less than that of bellows **52** to a subsequent change in temperature of the fluid surrounding bellows **22** and **52**. The resulting actuation of table **84** will be similar to that heretofore described but in a reverse sense so that the table **84** is reset by the curved bearing surface **92** movement relative to rod portion **62** to prevent movement of output rod **106** in response to changes in the fluid surrounding bellows **22** and **52** irrespective of any variation in volume between bellows **22** and **52**. Thus, by matching the radius of curvature of bearing surface **92** and angle of rod portion **62** relative thereto with reference to the degree of expansion of motor bellows **22** in response to a given incremental temperature change at probe **46** over the range of operating temperatures, the abovementioned effective lever arm may be suitably varied to achieve the necessary compensation. The stem **72** and thus rod portion **78** attached thereto which supports one corner of plate **84** may be adjusted to vary the position of output rod **106** for calibration purposes by turning screw member **80** as will be recognized by those persons skilled in the art.

Although only one embodiment of the present invention has been illustrated and described, it will be apparent to those persons skilled in the art that various changes in the structure and relative arrangement of parts may be made to suit individual requirements without departing from the spirit and scope of the present invention.

I claim:

1. Temperature responsive apparatus responsive to two independently variable temperature sources defined by a sensed variable temperature and an environmental variable temperature for actuating a positionable output member wherein compensating means is provided for eliminating the effect of the environmental temperature thereby rendering the position of the output member indicative of the sensed temperature only, said apparatus comprising:

a casing defining a fluid filled chamber wherein the temperature of the fluid is subject to variation;

a first variable volume chamber mounted in said fluid filled chamber and filled with a temperature responsive medium which expands and contracts in response to variations in the sensed temperature as well as the temperature of the fluid surrounding the same;

a second variable volume chamber mounted in said fluid filled chamber in spaced apart relationship to said first variable volume chamber and adapted to expand and contract in response to variations in the temperature of the fluid surrounding the same;

a support member secured to said casing in spaced apart relationship to said first and second variable volume chambers;

tiltable table means;

first means including a curved bearing surface operatively connecting said tiltable table means to said output member for actuating said output member in response to movement of said tiltable table means;

second means including a curved bearing surface operatively connecting said tiltable table means to said support member for pivotal movement on said curved bearing surface;

third means including a curved bearing surface operatively connecting said tiltable table means to said first variable volume chamber for actuating said tiltable table means in response to movement of said first variable volume chamber;

fourth means including a curved bearing surface operatively connecting said tiltable table means to said second variable volume chamber for actuating said tiltable table means in response to movement of said second variable volume chamber;

said tiltable table means being actuated by said first variable volume chamber in response to a variation of said sensed temperature and movable about an axis passing through a point of contact of said curved bearing surface of said second means with said support member and a point of contact of said curved bearing surface of said fourth means with said second variable volume chamber thereby actuating said output member accordingly;

said tiltable table means being actuated by said first and second variable volume chambers in response to a variation in temperature of the fluid surrounding said chambers and movable about an axis passing through the center of curvature of said curved bearing surface of said first means and the center of curvature of said curved bearing surface of said second means thereby rendering the position of said output member constant irrespective of the response of said first variable volume chamber to said variation in temperature of the fluid surrounding the same.

2. Temperature responsive apparatus as claimed in claim **1** wherein:

said tiltable table means is a substantially flat plate having the curved bearing surfaces of said first, second, third and fourth means arranged in fixed spaced apart relationship thereon;

said curved bearing surfaces of said second and fourth means are defined by arcuate portions provided with the same radius of curvature.

3. Temperature responsive apparatus as claimed in claim **2** wherein:

said second variable volume chamber includes an elongated circular member fixedly secured thereto and movable therewith;

said circular member being arranged with its axis angularly disposed relative to said curved bearing sur-

face of said fourth means and engageable therewith to thereby establish a variable effective lever arm between said first and second variable volume chambers, said variable effective lever arm varying as a function of the degree of expansion of said first variable volume chamber in response to said sensed temperature as a result of relative motion between said circular member and said curved bearing surface of said fourth means produced by movement of said flat plate in response to said first variable volume chamber to thereby compensate for the greater or less expansion rate of said first variable volume chamber relative to said second variable volume chamber for a given variation in temperature of the fluid surrounding the same.

4. Temperature responsive apparatus as claimed in claim 1 wherein:

said first and second variable volume chambers are first and second bellows, respectively, filled with a temperature responsive fluid;

said first bellows being connected interiorly to a probe exposed to the temperature to be sensed;

said first and second bellows being exposed exteriorly to said variable temperature fluid contained by said casing.

5. Temperature responsive apparatus as claimed in claim 4 wherein:

said first bellows is provided with a curved member fixedly secured to the movable end thereof and adapted to engage said curved bearing surface of said third means;

said second bellows is provided with an elongated circular member fixedly secured to the movable end thereof and angularly disposed relative to said curved

bearing surface of said fourth means engageable therewith;

said support member having an elongated circular member fixedly secured thereto;

said curved bearing surface defined by said second means defining an arcuate track having a cross section curved to mate with said circular member of said support member;

said arcuate track and said curved bearing surface having the same radius of curvature.

6. Temperature responsive apparatus as claimed in claim 1 wherein:

said tiltable table means is a substantially square flat plate having each corner portion thereof provided with a respective one of said first, second, third and fourth means fixedly secured thereto.

7. Temperature responsive apparatus as claimed in claim 1 and further including:

spring means operatively connected to said tiltable table means for imposing a force thereon opposing expansion of said second variable volume chamber.

References Cited

UNITED STATES PATENTS

2,398,158	4/1946	Ray	236—86
2,458,610	1/1949	Lindstrom	73—362.5 X
2,732,849	1/1956	Rosenberger et al.	73—362.5 X
3,177,720	4/1965	Metheny	73—362.4
3,259,315	7/1966	Gray et al.	236—37

LOUIS R. PRINCE, *Primary Examiner.*

D. M. YASICH, *Assistant Examiner.*

U.S. Cl. X.R.

73—368.7