rotork®
Controls

CK Range

Safe Use Installation Manual

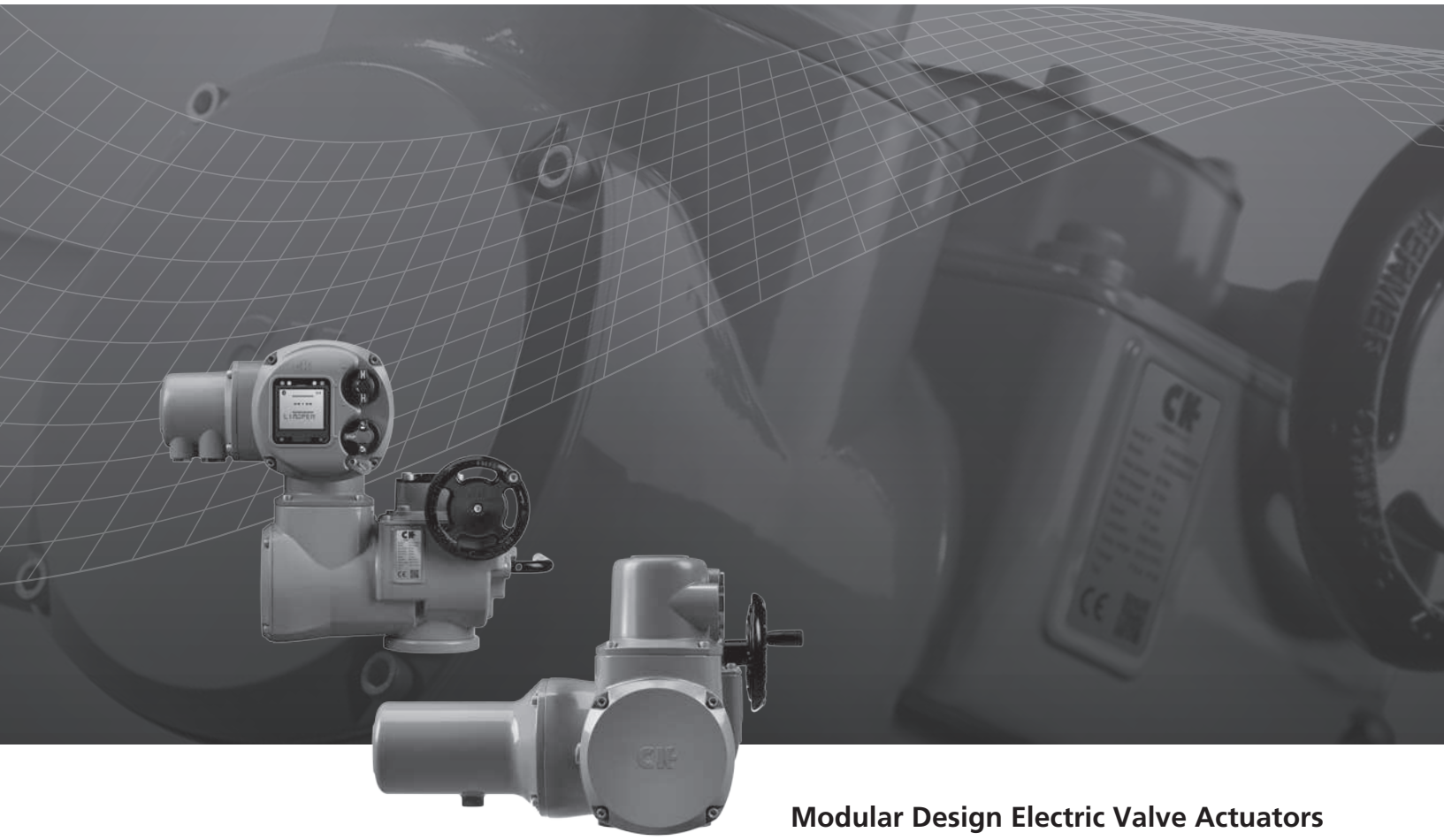

Modular Design Electric Valve Actuators

Keeping the World Flowing



Table of Contents

1.0 Introduction **3**

1.1 Introduction to this manual 4

2. Safety **5**

2.1 Standards and Directives 5

2.2 Competency 5

2.3 Commissioning 5

2.4 Warnings 5

3. Transport and Storage **6**

4. Actuator Identification **7**

4.1 CK Standard 7

4.2 CKc Centronik 8

5. Preparing the Drive Bush **9**

5.1 Thrust type base assembly 9

5.2 Non thrust type base assembly 10

6. Mounting the Actuator **11**

6.1 Weights and Measures 11

6.2 Rising Stem Valves 12

6.3 Non Rising Stem Valves 12

6.4 Valve with Gearbox 12

6.5 Actuator sealing 12

7. Cable Connections **13**

7.1 Terminal block layout 13

7.2 Earth/Ground connections 14

7.3 Removing the Plug and Socket 14

7.4 Cable entry 14

8. Operating your actuator **14**

8.1 Operation by Hand 14

9. Commissioning - Basic Settings **15**

9.1 Centronik Interface 15

9.2 Basic Mechanical Switch Mechanism Setting 17

9.3 Basic Digital Switch Mechanism Setting 22

9.4 Secondary Function Setting 26

10. Maintenance, Monitoring and Troubleshooting **26**

11. Environmental/Recycling **26**

12. Vibration and Shock **27**

1. Introduction

⚠ **This manual contains important information to prevent damage in their handling, setting and use. It is essential to follow and observe all the points. Please observe all National Legislation for health and safety regulations, standards and directives applicable.**

This works and the information it contains are the property of Rotork. The information it contains shall not be reproduced or disclosed, in whole or in part without the prior written consent of Rotork.

Instructions included in this document are applicable for all variants of the CK Range - including but not limited to; CK Standard, CKR, CKC and CKRC.



1.1 Introduction to this Manual

This manual is produced to enable a competent user to install, operate, adjust and inspect the CK Range of valve actuators.

These user instructions are provided subject to the following conditions and restrictions:

This document contains information of a proprietary nature belonging to Rotork. Such information is supplied solely for the purpose of assisting users of the CK Range of valve actuators in its installation and maintenance.

The text and the graphics included in this document are for the purpose of illustration and reference only. The specifications on which they are based are subject to change without notice.

Information in this document is subject to change without notice.

This manual provides instruction on:

- Manual and electrical operation.
- Preparation and installation of the actuator onto the valve.
- Basic Commissioning.
- Maintenance.

Refer to Publication PUB 111-008 for repair, overhaul and spare part instructions.

2. Safety

All users working with this product must be familiar with and observe the safety and warning instructions given in this manual. To avoid personal injury or property damage safety instructions and warning signs on the product must be observed.

Due consideration of additional hazards should be taken when using the product with other equipment. Further information and guidance relating to the safe use of the product is provided on request.

These instructions must be observed otherwise safe use and operation cannot be guaranteed.

2.1 Standards and Directives

Rotork products are designed and manufactured in compliance with internationally recognised standards and directives. EC Declaration of Conformity and Incorporation are available on request. It is the responsibility of the end user or contractor to ensure that the legal requirements, directives, guidelines, national regulations and recommendations applicable to the site of installation are met with respect to assembly, electrical connections and operation.

2.2 Competency

The user and those persons working on the equipment should be familiar with and observe their responsibilities under any statutory provisions relating to occupational health and safety regulations. Before working on this product users should have thoroughly read and understood these instructions.

Only persons competent by virtue of their training and experience should install, maintain and repair Rotork actuators.

2.3 Commissioning

It is important to check that all settings meet the requirements of the application before commissioning the product. Incorrect settings might cause damage to valves or other property. Rotork will not be held liable for any consequential damage.

2.4 Warnings

⚠ This information is needed to avoid a safety hazard, which might cause bodily injury

(!) This information is necessary to prevent damage to the product or other equipment

⚠ WARNING: Motor Thermostat / Motor Temperature

Under normal operation the surface temperature of the actuator's motor cover can exceed 60 °C above ambient. Failure to correctly connect the thermostat may lead to electrical hazards and invalidate the electrical safety case and any safety approvals. Surface temperatures of motor enclosures may reach temperatures which can cause discomfort or injury to personnel accidentally coming into contact with hot surfaces. Protection should be provided by the user to protect against accidental contact with hot surfaces. Failure to observe this precaution could result in bodily injury.

⚠ WARNING: Surface Temperature

The installer/user must ensure that the actuator's surface temperature rating is not influenced by external heating/ cooling effect (e.g. valve/pipeline process temperatures).

(!) CAUTION: Enclosure Materials

The CK Range of valve actuators are manufactured from aluminum alloy with stainless steel fasteners. The thrust bases are manufactured in SG iron. The user must ensure that the operating environment and any materials surrounding the actuator cannot lead to a reduction in the safe use of, or the protection afforded by, the actuator. Where appropriate the user must ensure the actuator is suitably protected against its operating environment.

⚠ WARNING: Unexpected Start up

Actuator may start and operate at any time when power is applied. This will be dependent on remote control signal status and actuator configuration.

3 . Transport and Storage

During transportation, care should be taken to ensure that your actuator is protected from impact. In the unfortunate event of your actuator receiving an impact, the actuator should be inspected by a Rotork trained technician (for transportation purposes, handwheels are supplied separately).

If your actuator cannot be installed immediately, store it in a clean, dry ventilated location that is off the floor and protect it from dust and dirt

CK Range valve actuators are supplied with temporary plastic transit cable entry plugs. These are for short term use and if the unit is likely to be stored for a period of time, these must be replaced with metal plugs which have been sealed with PTFE tape.

If the actuator has to be installed but cannot be cabled, it is recommended that the plastic transit cable entry plugs are replaced with metal plugs which are sealed with PTFE tape until you are ready to connect the incoming cables.

The CK plug and socket assembly will preserve internal electrical components perfectly if left undisturbed. Rotork cannot accept responsibility for deterioration caused on-site once the covers are removed. Every CK Range actuator is fully tested before leaving the factory to give years of trouble free operation, providing it is correctly commissioned, installed and sealed. Technical documentation that is supplied with each unit must be kept safe for future reference.

4 . Actuator Identification

4.1 CK Standard

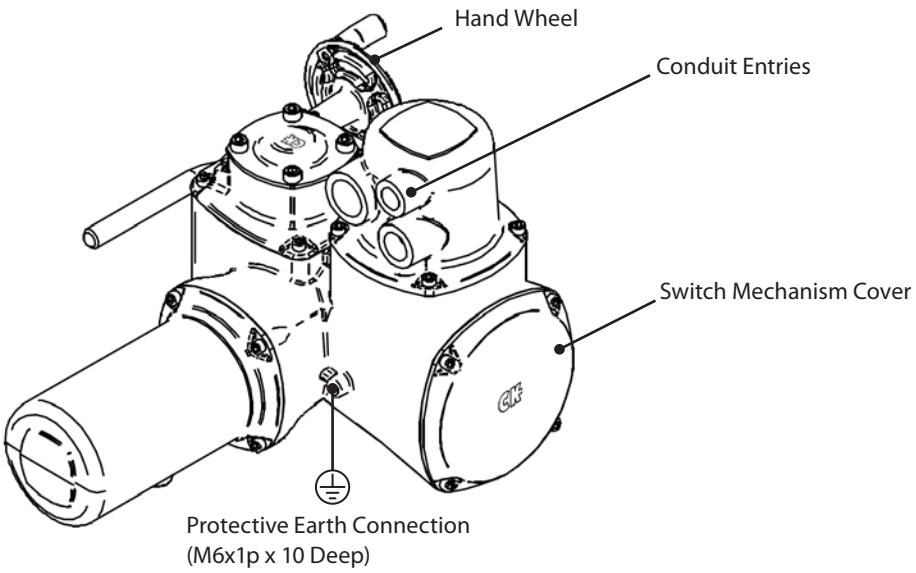

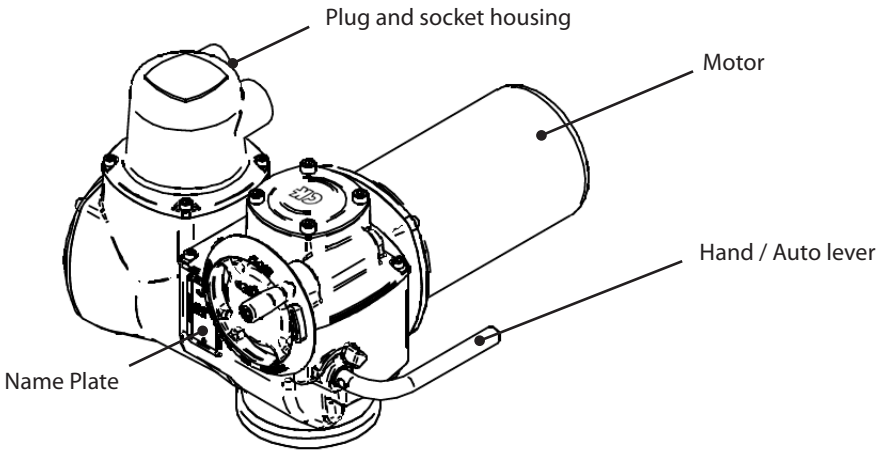

Electric Actuator Nameplate

The actuator name plate will enable you to identify your unit.
Example below:

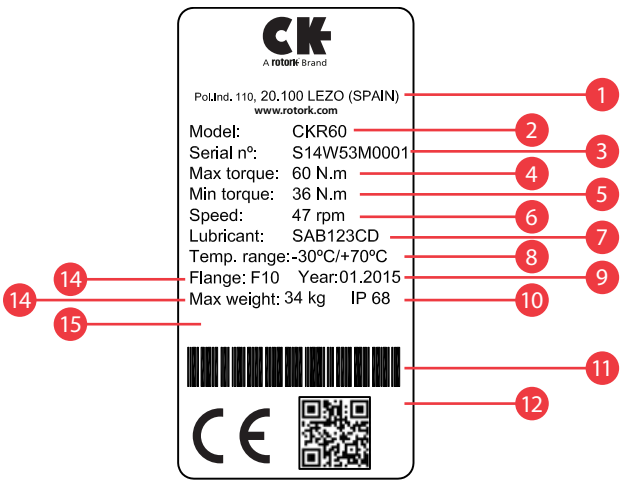

Mark	Description
1	Facility Address
2	Actuator Model
3	Serial Number
4	Maximum Torque
5	Minimum Torque
6	Output Speed (RPM)
7	Lubricant
8	Temperature Range
9	Manufacturing Date
10	Enclosure Rating
11	Unit Barcode (Factory Use)
12	QR Code
13	Flange Size
14	Maximum Unit Weight
15	Spare Line (Tag Information)

4.2 CKc Centronik

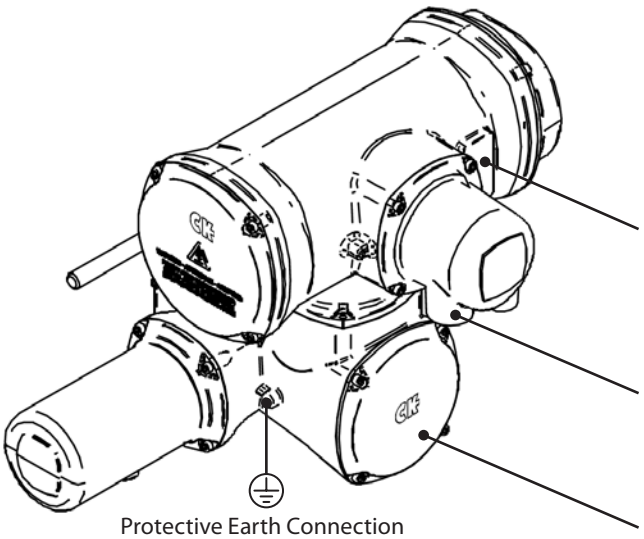

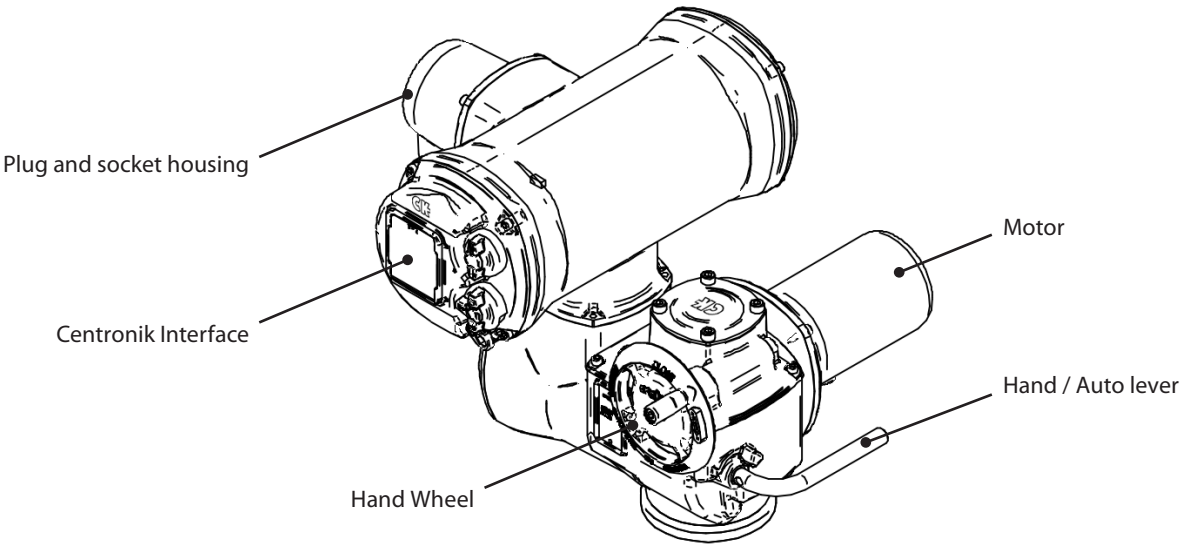

Centronik Module Nameplate

The Centronik name plate will enable you to identify your unit. Example below:

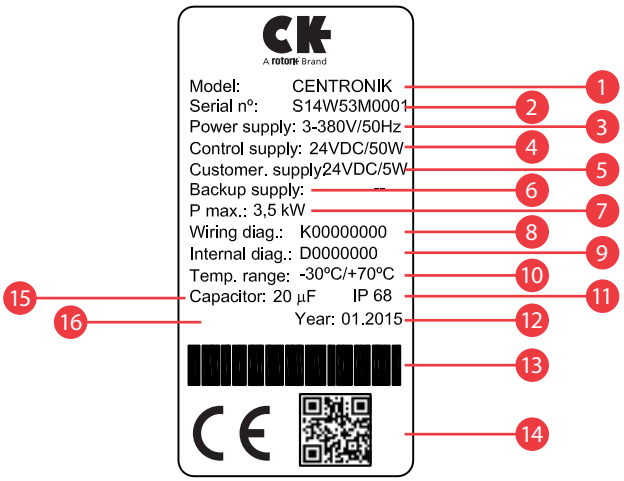

Mark	Description
1	Model
2	Serial Number
3	Main Power Supply
4	Remote Control Supply
5	Internal Customer Supply
6	Backup Supply
7	Maximum Power Rating
8	Customer Wiring Diagram
9	Internal Unit Diagram
10	Temperature Range
11	Enclosure Rating
12	Manufacturing Date
13	Unit Barcode (Factory Use)
14	QR Code
15	Capacitor Value (1ph only)
16	Spare Line (Tag Information)

5. Preparing the Drive Bush

5.1 Drive Bush - Type A Coupling:

Please see Publication PUB111-001 for thrust/torque allowances.

(Note: CK30/60 actuators may be fitted with a F07/FA07 flange adaptor, in which case this will need to be removed before the below procedure is carried out).

Turn the actuator onto its side, removing the hex head screws holding the thrust base (1) onto the actuator.

Remove the two M3 cap screws retaining the spigot ring (2)

Pull out the drive bush (3) complete with the bearing assembly (4)

CAUTION: Failure to remove the bearing assembly and the o-rings prior to machining may result in damage to the bearing.

Disassembly of bearing assembly:

Locate and remove the snap ring (5) using a suitable tool

Remove the split collar (6)

If fitted, remove the spacer ring (7)

Slide the bearing (4) off the drive bush (3)

Keep the bearing and the drive bush components clean. The split collar keys (6) must be kept as a machined pair.

Machine the drive bush, after removing the o-rings, allowing clearance for rising spindle applications.

Reassembly of bearing assembly:

Ensure the drive bush (3) is clean and free from swarf. Ensure the o-rings are clean and greased (see section 11, page 26 for typical grease). Slide the bearing assembly (4) onto the drive bush (3) and ensure that it is fitted down to the shoulder. Grease and refit the split collar keys (6) and spacer ring (7) if fitted and secure with the snap ring (5).

Grease and re-fit the drive bush bearing assembly into the thrust base.

Refit the thrust base (1) ensuring that the drive dogs on the bush align with the slots in the hollow center column and secure with the hex head screws to the following torque values:
See Table A on page 12.

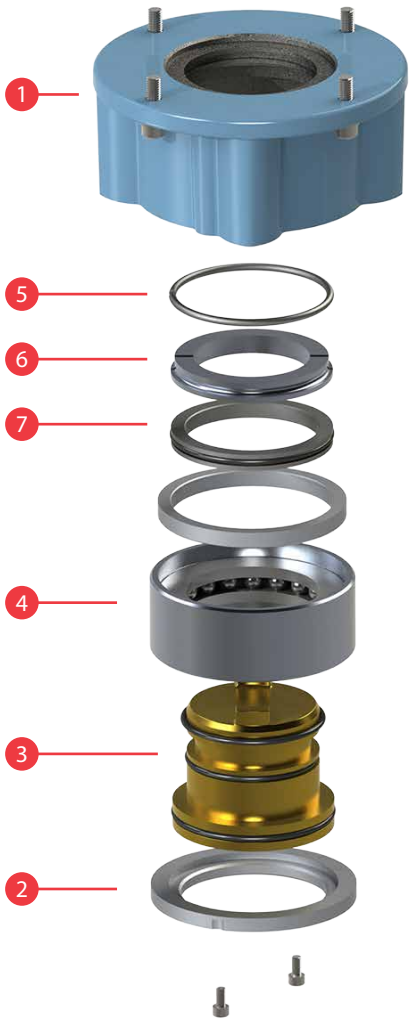

5.2 Drive Bush - Type B Coupling:

Please note: Type B couplings are NOT suitable for axial loads/ forces

Turn the actuator onto its side.

Type B3 and B4 :

Using a suitable tool, remove the circlip (1) whilst pulling the drive bush (2) out. The drive bush will detach from the center column, leaving circlip (3) behind.

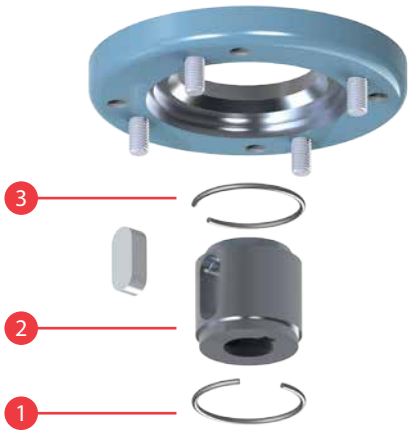

Type B1 :

This drive bush is supplied as an integral part of the actuator.

Reassembly:

Refitting is the reverse of removal ensuring that the drive bush is greased and the bolts are tightened to the correct torque, see Table A on page 12.



6. Mounting the Actuator

(!) CAUTION: Do not lift the actuator/valve combination via the actuator. Always lift the combination via the valve. Each lift must be assessed on an individual basis.

⚠ WARNING: Always ensure that the actuator weight is supported from the actuator body and not the Centronik control module.

⚠ WARNING: Ensure the actuator is fully supported until full valve/gearbox engagement is achieved and the actuator is secured onto the flange.

Ensure the valve is secure before fitting the actuator as the combination may become unstable.

If it is necessary to lift the actuator using mechanical equipment, certified slings should be used. Lifting and slinging should always be carried out by competent trained personnel.

The actuator base dimensions/couplings conform to ISO 5210 or USA Standard MSS SP102.

Actuator to valve fixing must confirm to Material specification ISO Class 12.9, yield strength 1,080 N/mm^2 .





6.1 Weights and Measures

Weight - kg (lbs)

Frame Size	Gross
30/60	33 (73)
120	39.5 (87)
250/500	79 (174)

Note: Weight stated are the maximum possible within that model range.

Oil Capacity

Frame Size	Litres	Pt-US
30/60	0.8	1.69
120	1	2.1
250/500	1.15	2.43

6.2 Mounting the Actuator - Rising Stem Valves

Fitting the Actuator and Base as a combined unit - all sizes

Fit the machine drive bush as described in section 5.1 into the thrust base assembly.

Lower the actuator onto the threaded valve stem, engage HAND operation and wind the handwheel in the open direction to engage the drive bush onto the valve stem. Continue winding the handwheel until the actuator is firmly down on the valve flange. Continue winding for a further two turns and secure with bolts, tightening down to the listed torques - Table A.

Fitting thrust base to valve - all sizes

Fit the machine drive bush as described in section 5.1 into the thrust base assembly.

Remove the thrust base as described in section 5.1 and place it on the threaded valve spindle with the drive keys pointing uppermost and turn the thrust base in the open direction to engage it on the spindle. Continue turning until the thrust base is on the valve flange but do not tighten at this stage.

Lower the actuator onto the thrust base and rotate the complete actuator until the drive keys on the drive bush align with the slots on the base of the center column. Continue to turn the actuator until the fixings holes align with the thrust base. Replace the base bolts and tighten to the required torque - Table A.

Open the valve by two turns and secure the thrust base to the valve flange and tighten to the required torque - Table A.

6.3 Mounting the Actuator - Non rising stem valves - Top Mounted

Ensuring that that the drive bush fits the input shaft/key and has adequate axial engagement then fit into the actuator as described in section 5.1/5.2

Engage **HAND**, offer up the actuator to the valve, turning the handwheel to align the drive bush. Tighten the mounting bolts to the required torque - Table A.

Note: When the thrust is being taken in the actuator, a thrust nut must be fitted above the drive bush and securely tightened.

6.4 Mounting the Actuator - Valve with Gearbox - Side Mounted

Follow the instructions in 6.3 as for top mounted instructions, checking that the mounting flange is at right angles to the shaft before installation.

6.5 Actuator Sealing

Ensure that the sealing cap and o-ring assembly is securely fitted to prevent moisture ingress into the centre column of the actuator .



For valves with rising spindles, a cover tube may be fitted. Ensure that the o-ring is correctly fitted and that the cover tube is secured with the supplied fasteners.



Table A: Required Torque

	Imperial Size	
Imperial Size	**Nm**	**lbf.ft**
1/4	12.1	9
3/16	24.3	17.9
3/8	42.3	31.2
7/16	67	49.4
1/2	103.2	76.1
9/19	147.4	108.7
5/8	205.3	151.4
Metric Size		
M5	6.2	4.6
M6	10.8	7.9
M8	26.1	19.3
M10	51.6	38
M12	89.2	65.8
M16	219.8	162.1

7. Cable connections

7.1 Terminal block layout

⚠ **WARNING: Ensure all power supplies are isolated before removing any covers.**

Do NOT run the actuator to limits with Incorrect phase rotation.

Safety Instructions in Section 2 of this document must be observed and only persons competent by virtue of their training and experience should carry out electrical connection.

For unit specific wiring, please refer to the provided wiring diagram. These can also be downloaded from www.rotork.com

⚠ **WARNING: For units including an internal heater. It is important to isolate the heater supply when heating is not required.**

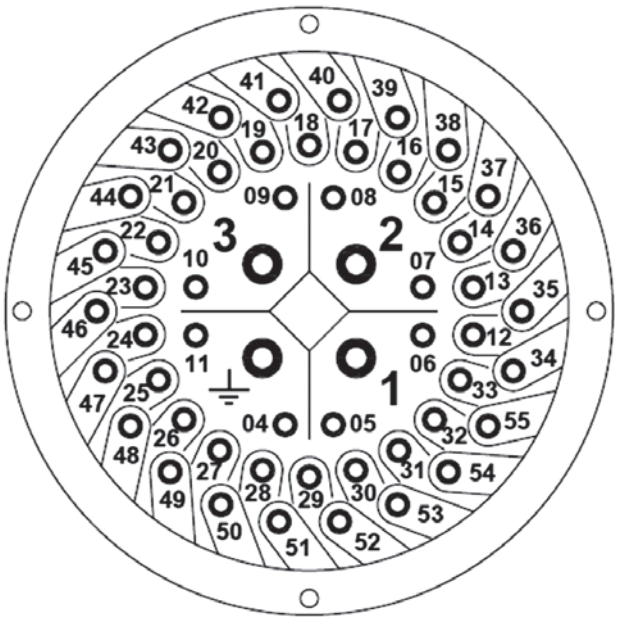

Electric motor nameplate

The current, mains voltage and mains frequency must match the data on the motor name plate:



Mark	Description
1	Motor QR Code
2	Enclosure Rating
3	Motor Insulation Class
4	Cos ϕ Power Factor
5	Duty Rating
6	Capacitor Value
7	Serial Number
8	Supply Voltage
9	Nominal Power
10	Nominal Current
11	Temperature Range
12	Unit Barcode (Factory Use)

7.1 Terminal block layout *contd.*

A switch or circuit breaker must be included in the wiring installation to the actuator. The switch or crcuit breaker must meet the relevant requirements of IEC60947-1 and IEC60947-3 and be suitable for the application. The switch or circuit breaker must not disconnect the protective earth conductor. The switch or circuit breaker must be mounted as close to the actuator as possible and shall be marked to indicate that it is the disconnect device for that particular actuator.

⚠ WARNING: The actuator must be protected with overcurrent protection devices, see relevant Motor Performance data sheet.

(!) CAUTION: Power supply cables must have sufficient mechanical protection properties to meet installation requirements and be screened to comply with EMC requirements of the installed actuator. Suitable methods include armoured and/or screened cables or cables contained within conduit.

IP68 sealing protection can only be achieved by ensuring that the correct cable glands are fitted and any remaining entries are correctly sealed up.

7.2 Earth/Ground Connections

⚠ WARNING: Risk of Electric Shock - Do not operate the actuator with the protective Earth conductor disconnected

The actuator is supplied with two earthing points. A 6 mm diameter hole is tapped adjacent to the conduit entries on the main casting for attachment of an external protective earthing strap. An internal 6 mm earth connection is also provided however it must not be used alone as the protective Earth Connection.

7.3 Removing the plug and socket

Using a 5 mm Allen (Hex) key, loosen the 4 captive screws evenly and remove the cover. Do not attempt to lever off the cover as you may damage the o-ring seal.

7.4 Cable entry

The cable entries into the plug and socket are M20 x 1.5p, M25 x 1.5p and M32 x 1.5p. Remove the plastic transit plugs and make cable entries appropriate to the cable type and size.

Ensure that threaded adaptors, cable glands or conduit are tight and fully waterproof. Seal unused cable entries with steel or brass threaded plugs.

Ensure that the cables are of the appropriate rating for the required duty and are fastened to the correct terminal. Connection details can be found on the wiring diagram.

Cable Size: Power Terminals 1,2 and 3: Max 6 mm^2

PE connection: Max 6 mm^2

Control contacts: (4 - 50) Max 2.5 mm^2

8. Operating your actuator

8.1 Operating by Hand

(!) CAUTION: Under no circumstances should any additional lever device such as a wheel-key or wrench be applied to the handwheel in order to develop more force when closing or opening the valve as this may cause damage to the valve and/or actuator or may cause the valve to become stuck in the seated/backseated position.

Keep clear of the handwheel when engaging hand operation. Actuators driving valves via extension shafts may be subject to retained shaft torsion which can cause the handwheel to rotate when hand operation is engaged.

To engage handwheel drive depress the Hand/Auto lever into “Hand” position and turn the handwheel to engage the clutch. The lever can now be released, it will return to its original position. The handwheel will remain engaged until the actuator is operated electrically when it will automatically disengage and return to motor drive.

For local lockout purposes the Hand/Auto lever can be locked in either position using a padlock with a 6.5 mm hasp.

Locking the lever in the "hand" position prevents electrical movement.

9. Commissioning

9.1 Centronik Interface

A IrCK Transmitter / Receiver

B Open

C Close

D Remote

E Stop

F Local



A *Bluetooth* Connection

B Infrared Connection

C Configuration Mode

D Communication Feedback

E Valve Position

F Current Menu

G Sub Menu / Setting Value

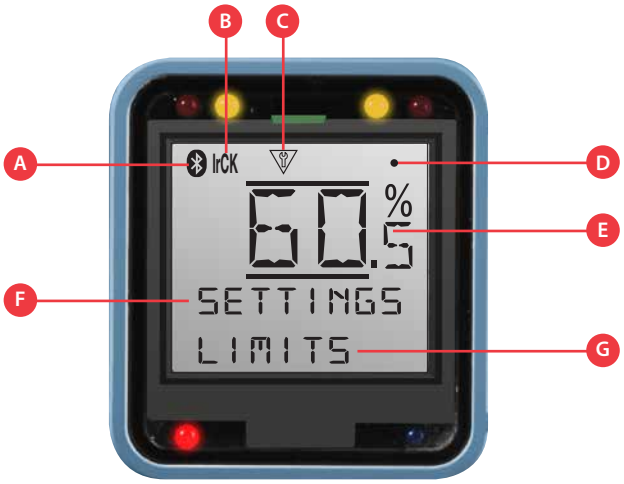

Centronik Navigation

The Centronik Control Module can be configured using 2 different input methods. An optional *Bluetooth* Setting Tool provides a handheld solution compatible with Infrared or optional *Bluetooth* communication. Alternatively the local selector knobs can be used to navigate in the same way. Be sure to read and understand the equivalent input commands. Instructions included in this manual are provided as shorthand symbols shown below.

Local Selector input

Setting Tool Input



Navigate to previous item within the current menu / decrease value / toggle setting





Exit to previous menu / exit setting change





Navigate to next item within the current menu / increase value / toggle setting





Enter menu / confirm selection / edit setting / save setting value



Interface Feedback

The Centronik display interface includes various features that provide feedback to the operator. This ensures that changes to the configuration of the actuator can be confirmed and validated during the commissioning process.

Arrow Identification

During general menu navigation, each submenu/setting will have a set of behaviour arrows associated with it. This lets the operator know what can be achieved on the current screen.

Solid blocks on the setting indicate you are in viewing mode.

Arrows on the setting/menu indicate navigation is possible - both directions.

This indicates you are presently at the first menu choice or lowest setting value.

This indicates you are presently at the last menu choice or highest setting value.

This indicates the setting is read only or only has one possible value.

Current Value

Both Directions

First Menu

Last Menu

Read Only

Confirmation Feedback

Whilst modifying settings or navigating through the various Centronik interface menus, it is important to recognise that a change has been accepted or saved.

A small confirmation dot will be shown in the top right corner of the display if a valid input command has been recognised by the Centronik interface.

For each movement, the confirmation dot will only be shown once the Open/Close selector returns to the default rest position.

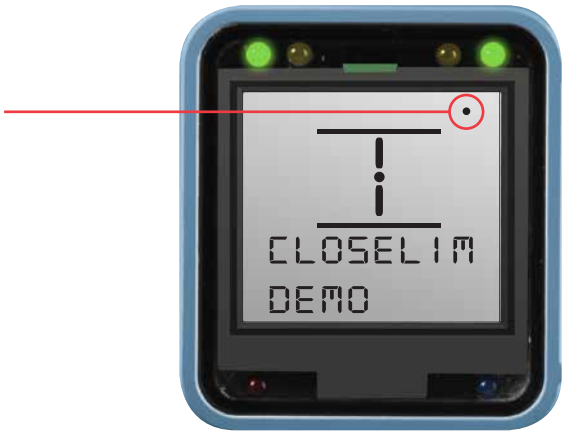

9.2 Basic Mechanical Switch Mechanism Setting

Instructions

⚠ **WARNING: Isolate all power to the actuator unless explicitly instructed otherwise.**

Remove the 4 x M6 cap screws retaining the switch mechanism cover.

Note: Consult wiring to determine specification of switches fitted.

Torque/Limit Setting

Refer to valve manufacturer for recommended setting. In the absence of valve manufacturer instruction refer to the table below.

Valve Type	Close Action	Open Action
Wedge Gate	Torque	Limit
Globe	Torque	Limit
Butterfly	Limit	Limit
Through Conduit	Limit	Limit
Ball	Limit	Limit
Plug	Limit	Limit
Sluice	Limit	Limit
Penstock	Limit	Limit
Parallel Slide	Limit	Limit

A 5mm Allen (Hex.) key and 0.8 x 4mm flat screwdriver are required to perform commissioning of the CK Mechanical Switch Mechanism.

CAUTION: For CK Standard and CKR actuators, the required end of travel action (torque or position) is determined by the set of switches cabled to the controlling switch gear - refer to actuator terminal plan and site field wiring.

WARNING: For CKC and CKRC actuators, the required end of travel action (torque or position) is determined by the [ACTION] setting within the Centronik Control Module configuration.

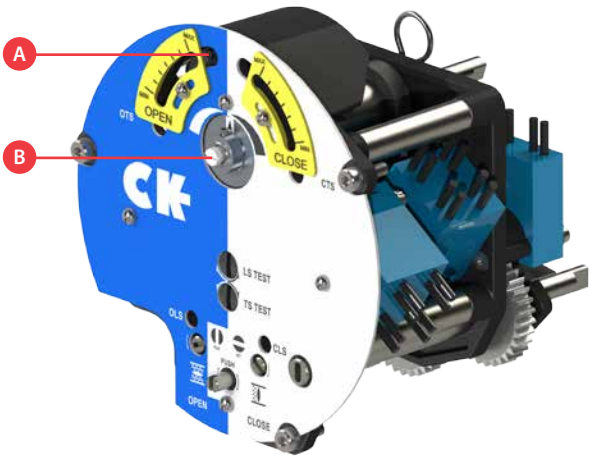

Set Torque Limits

A Indicator/Adjustment Point

B Torque Cam Clutch Screw

C Open Torque Adjustment Point

D Close Torque Adjustment Point

E Factory Calibration Fixings

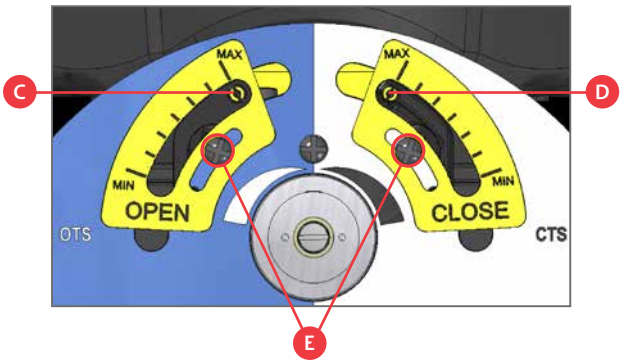

CAUTION: Do not adjust the fixings or position of the yellow torque indicator plates. These are factory configured and should not be removed under any circumstance.

1) Move the valve to a mid-travel position and loosen the Torque Cam Clutch 1.5 turns using a flat screwdriver.
2) Adjust each Torque Cam to the desired value - between min. (40%) & max. (100%) - by moving the cam using a screwdriver on the adjustment point.

CAUTION: To avoid introducing an offset to the set value when adjusting the torque trip limits. Ensure the screwdriver remains perpendicular to the switch mechanism faceplate.

3) Tighten the Torque Cam Clutch Screw once both torque trip limits have been set.

CAUTION: Tighten the Torque Cam Clutch Screw until the spring washer is fully deformed under the screw head.

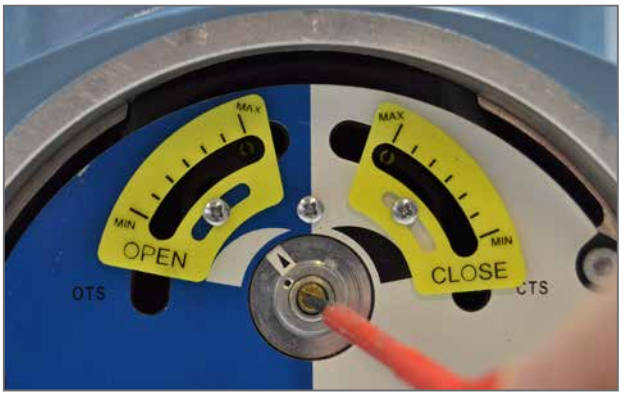

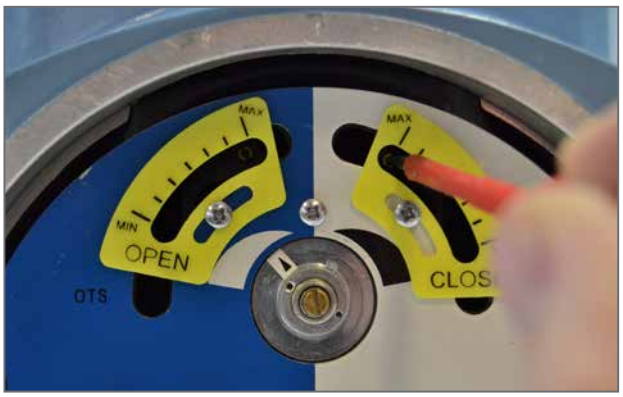

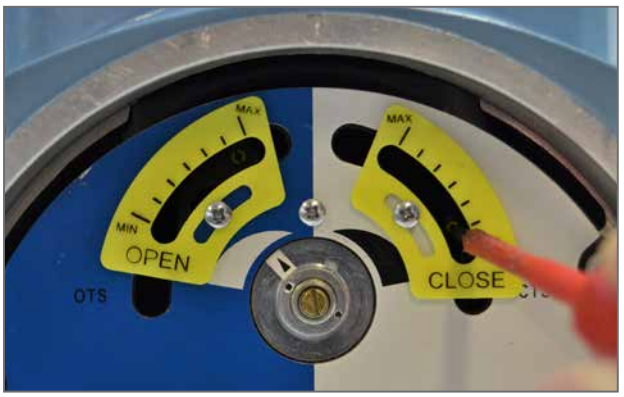

Set Position Limits

F OLS Indicator Window

G OLS Adjustment Screw

H Drive Clutch Shaft

I CLS Indicator Window

J CLS Adjustment Screw

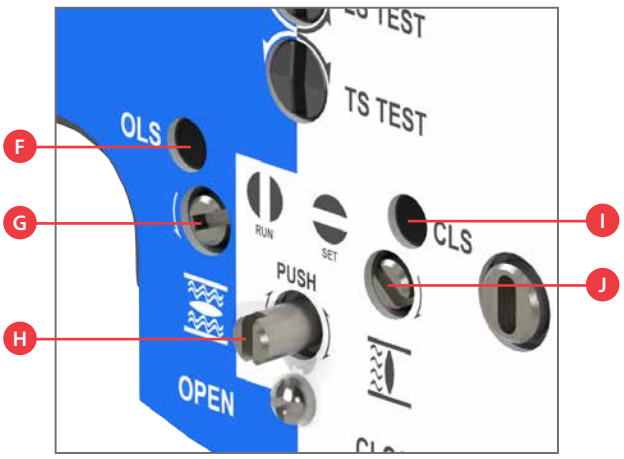

CAUTION: The main power supply must be maintained during the commissioning process for CKc and CKRc actuators with fitted Centronik Control Modules.

1) Move the actuator to the valve CLOSED position using the handwheel.
2) Using a flat screwdriver, depress the Drive Clutch Shaft and rotate to the "Set" position as shown on the switch mechanism faceplate.
3) The CLS Adjustment Screw must now be rotated to engage the closed limit switch inside the switch mechanism. The CLS Indicator Window will show one of four possible symbols. Refer to Figure 1 on page 20.
4) Depending on where the mechanism is in the cycle, it is possible that the switch will be approached from the wrong direction, in this case it is necessary to move through the limit and approach it from the correct direction. This avoids the need to wind through the whole mechanism to reach the limit position. The correct direction to approach the limit is shown by the arrow next to the Adjustment Screw input.
5) It is necessary to confirm the switch has engaged correctly.
   a. For CK Standard or CKR units, measure across the appropriate terminals using a continuity meter - 12 & 13 for motor control and 14 & 15 for indication feedback.
   b. For CKc or CKRc units fitted with a Centronik control Module, confirm the position display shows the closed limit symbol.
6) Using a flat screwdriver, depress the Drive Clutch Shaft and rotate to the "Run" position as shown on the switch mechanism faceplate.
7) Rotate the CLS and OLS Adjustment Screws a small amount in both directions to re-engage the mechanism drive. A click will be heard as the drive drops back into engagement and the adjustment screws will no longer move in either direction.

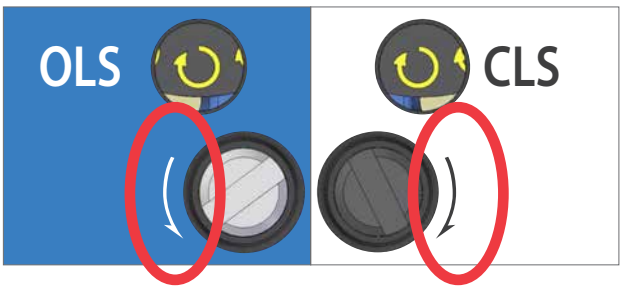



CAUTION: This must be done or the limit will be lost when the actuator is moved.

8) Move the actuator to the valve OPEN position using the handwheel.

9) Using a flat screwdriver, depress the Drive Clutch Shaft and rotate to the "Set" position as shown on the switch mechanism faceplate.

10) The OLS Adjustment Screw must now be rotated to engage the open limit switch inside the switch mechanism. The OLS Indicator Window will show one of four possible symbols. Please refer to Figure 1 below for direction input.

11) Depending on where the mechanism is in the cycle, it is possible that the switch will be approached from the wrong direction, in this case it is necessary to move through the limit and approach it from the correct direction. This avoids the need to wind through the whole mechanism to reach the limit position. The correct direction to approach the limit is shown by the arrow next to the Adjustment Screw input.

12) It is necessary to confirm the switch has engaged correctly.
    a. For CK Standard or CKR units, measure across the appropriate terminals using a continuity meter - 16 & 17 for motor control and 18 & 19 for indication feedback.
    b. For CKC or CKRC units fitted with a Centronik control Module, confirm the position display shows the open limit symbol.

13) Using a flat screwdriver, depress the Drive Clutch Shaft and rotate to the "Run" position as shown on the switch mechanism faceplate.

14) Rotate the OLS and CLS Adjustment Screws a small amount in both directions to re-engage the mechanism drive. A click will be heard as the drive drops back into engagement and the adjustment screws will no longer move in either direction.

(!) CAUTION: This must be done or the limit will be lost when the actuator is moved.

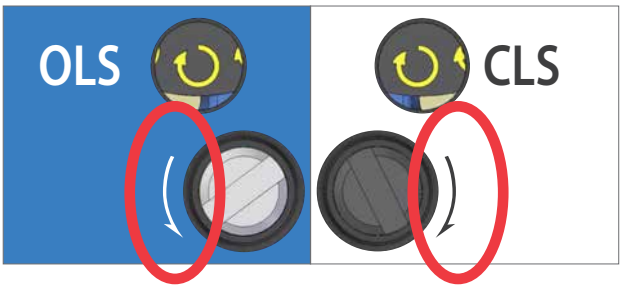



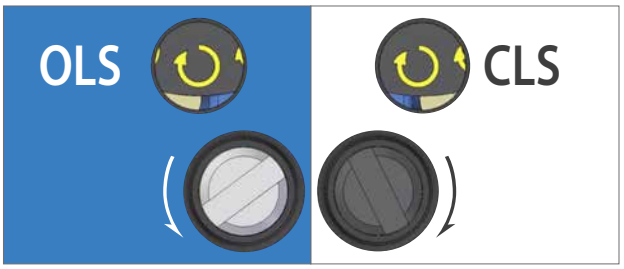

Rotate the OLS/CLS Adjustment Shaft Clockwise.

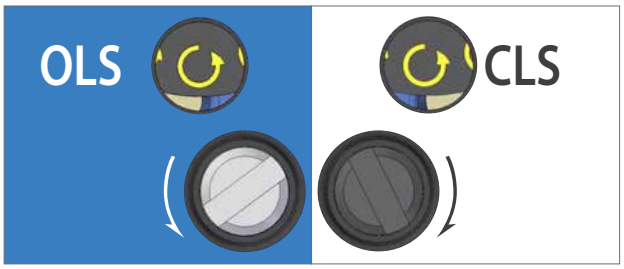

Rotate the OLS/CLS Adjustment Shaft Anti-Clockwise.

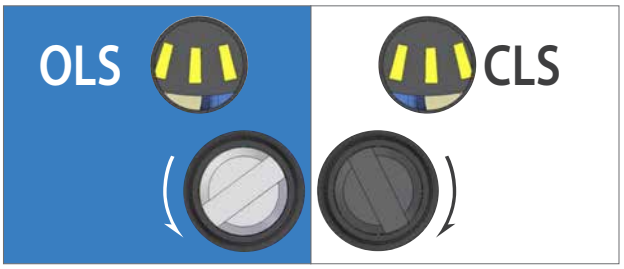

Rotate the OLS/CLS Adjustment Shaft in the direction shown next to the Shaft input.

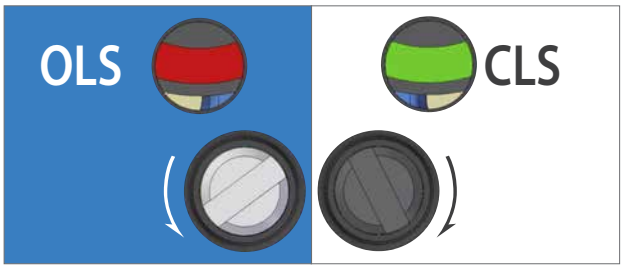

The limit switching point is near or made.

Figure 1.

End of Travel Action

For CKc or CKrc actuators fitted with a Mechanical Switch Mechanism, the required end of travel action (torque or position) is determined by the **[ACTION]** setting within the Centronik configuration. All other limit functions will not be available as they need to be intrusively set on the mechanism.

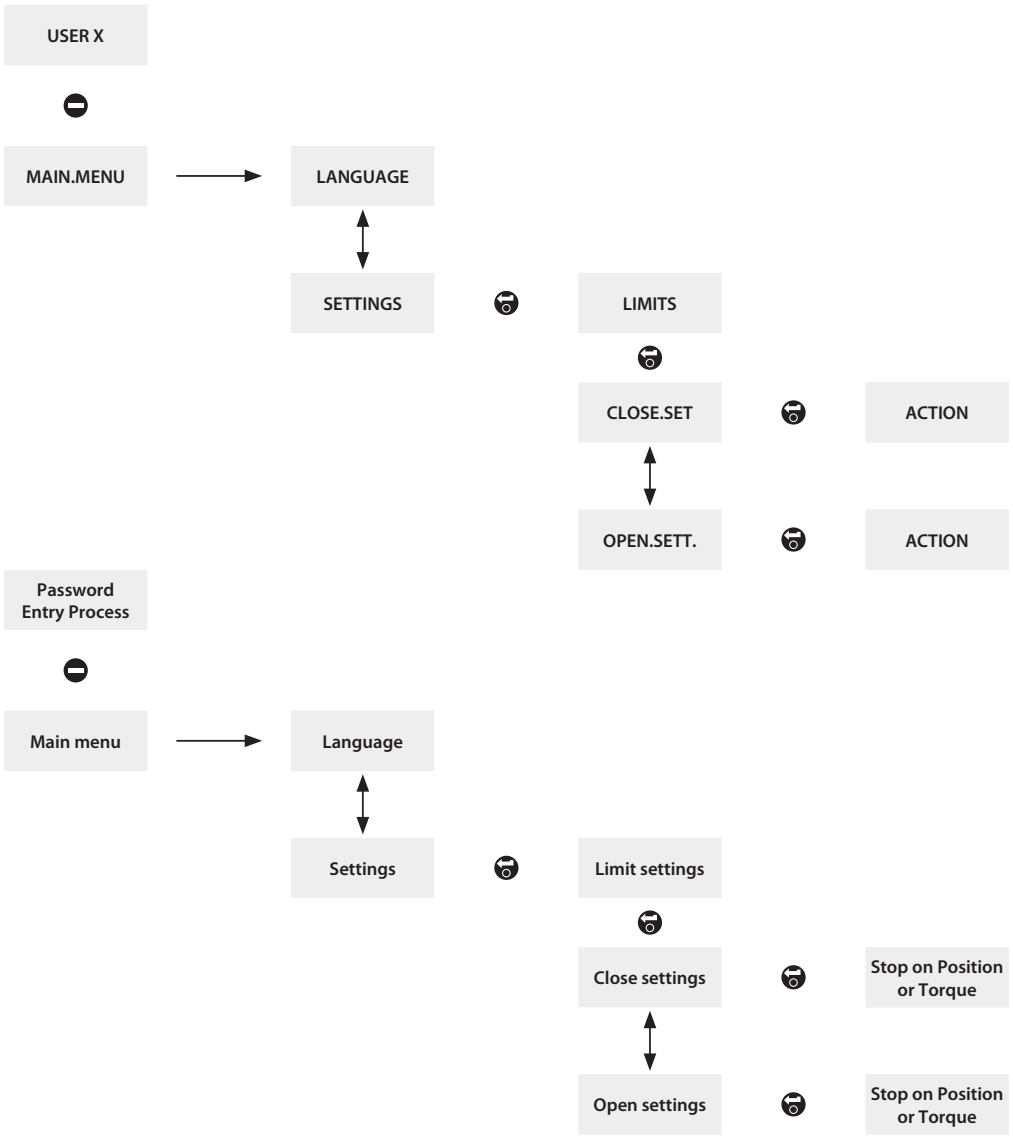



9.3 Basic Digital Switch Mechanism Setting

Entering Configuration mode

Access to configuration mode will vary depending on the navigation method employed. To access configuration mode with the local selector, ensure the actuator is in Stop mode and input the following sequence:



Each command input must be completed within 1 second of the last and the selector knob must return to its default rest position between each input.

To access configuration mode with the *Bluetooth* Setting Tool, ensure the actuator is in Stop mode and point the setting tool directly at the IrCK LED.

Press to initiate communication. The IrCK symbol will be shown when an input from the *Bluetooth* Setting Tool is registered by the Centronik Control Module.

If the optional *Bluetooth* module is fitted, the Setting Tool will begin communication through IrCK until a secure *Bluetooth* link has been established. To confirm a *Bluetooth* connection has been successful, the top left symbol on the Centronik display will change from IrCK to and the *Bluetooth* Setting Tool button will illuminate solid blue.

For IrCK communication, the Bluetooth Setting Tool must be aligned to the IrCK LED at all times.





Entering the User Password

The password entry screen will be displayed with the default password visible. Press to confirm this entry or use to enter a different password. For instruction on changing the user password, refer to PUB111-005.

Blank spaces will fill with whilst modifying the password text.

Once a valid password has been entered the display will show the current active permission level with a symbol and text.

Press to return to the main menu.

Actuator settings cannot be modified in Remote.

The symbol shown to the left side of the display will reference the following permission levels:

- User level permission to provide basic access to settings for commissioning and configuration purposes.
- Super User level permission to provide access to more advanced setting features.
- Service level permission for Engineer access only.

Menu Navigation

The menu map below provides direction for the basic setting and commissioning of a CKc or CKrc actuator equipped with a Digital Switch Mechanism and Centronik Control Module.

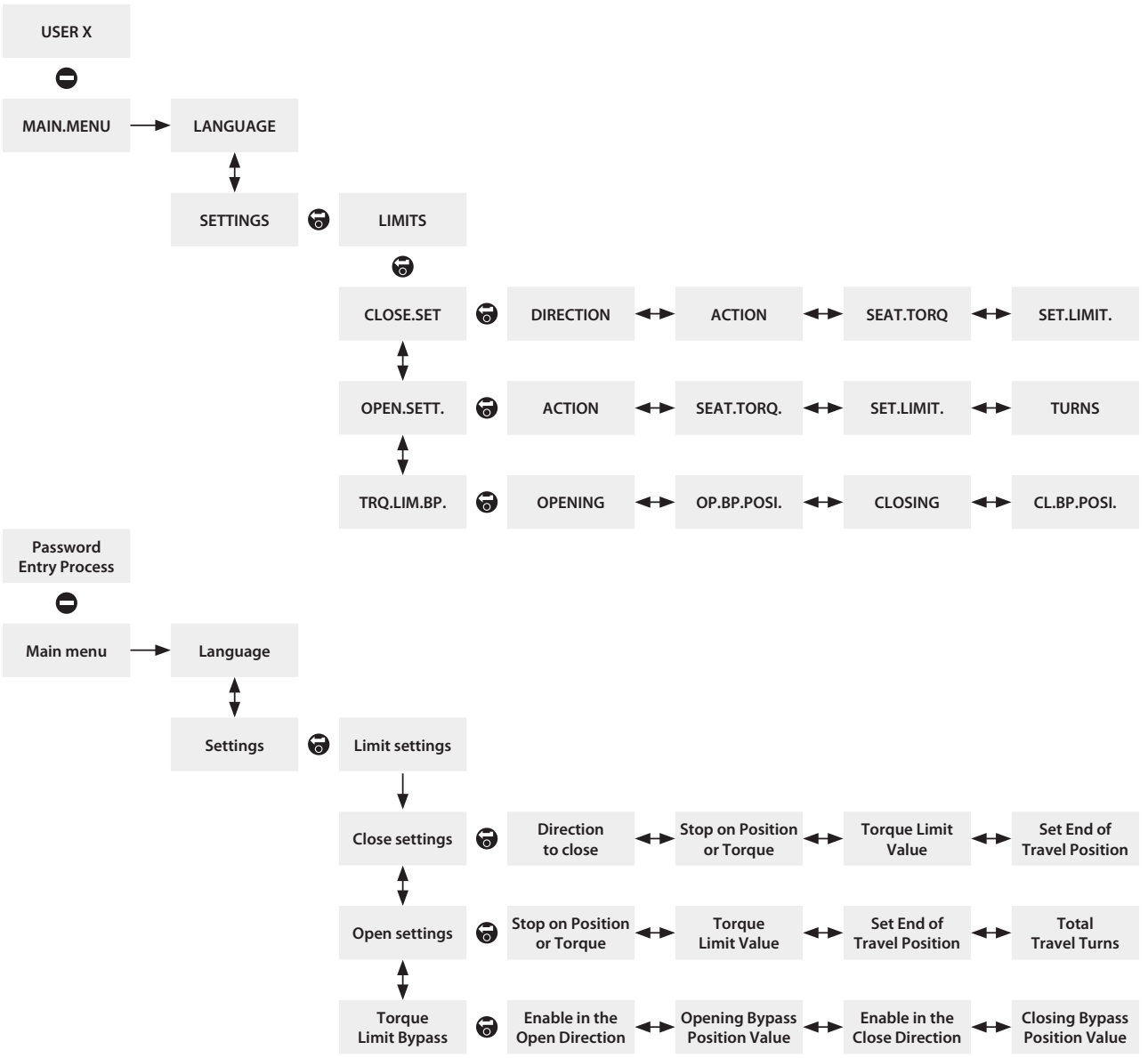

Main Menu > Settings > Limits

The Limits menu details all of the appropriate settings to control the conditions for stopping actuator movement.

Use the menu map on the previous page to follow the menu structure through to the **[LIMITS]** sub menu.

Limits > Close Settings [CLOSE.SET.]

Direction to Close [DIRECTIO.]

Press to edit, select preferred option using and for Clockwise or Anti-clockwise operation and press to save selection.

Action [ACTION]

Press to edit, select preferred option using and for Seat Limit or Seat Torque and press to save selection.

Seating Torque [SEAT.TORQ.]

Press to edit, adjust shown value using and and press to confirm selection (40% - 100%).

CAUTION: The Seating Torque value is used as torque limit protection through full valve travel.

Setting the Close Position Limit [SET.LIMIT.]

Move the actuator to the fully closed position . Allow for overrun by winding the manual override handwheel in the open direction by 5 turns (10 turns for CK500).

Press to edit.

[SURE??] will show on the display, press to confirm.

Once these steps are complete, the Centronik display position should replicate the image below.

Limits > Open Settings [OPEN.SETT.]

Action [ACTION]

Press to edit, select preferred option using and for Seat Limit or Seat Torque and press to save selection.

Seating Torque [SEAT.TORQ.]

Press to edit, adjust shown value using and and press to confirm (40% - 100%).

CAUTION: The Seating Torque value is used as torque limit protection through full valve travel.

Turns [TURNS]

This setting will show the number of output turns configured for actuator / valve travel between the open and closed limit positions. This is a read only function to validate total valve travel.

Setting the Open Position Limit [SET.LIMIT.]

Move the actuator to the fully open position. Allow for overrun by winding the manual override handwheel in the close direction by 5 turns (10 turns for CK500).

Press to edit.

[SURE??] will show on the display, press to confirm.

Once these steps are complete, the Centronik display position should replicate the image below.





Limits > Torque Limit Bypass [TRQ.LIM.B.P.]

Occasionally applications will require a break to open or break to close torque that exceeds the standard torque limit. Setting the torque limit bypass will ignore existing torque limit settings and apply maximum torque (up to approximately 150% or rated) across a predetermined portion of travel.

CAUTION: The valvemaker / integrator should be consulted to confirm the valve structure and interface components can withstand the additional torque/thrust.

Torque Limit Bypass

The **[OPENING]** and **[CLOSING]** settings will enable torque limit bypass for the relevant direction of travel, use ▲▼ and ● to enter the setting sub menu.

Press ● to edit, select **[ON]** or **[OFF]** and press ● to save selection.

Torque Limit Bypass Position

The **[OP.BP.POSI.]** value dictates the travel away from the closed position limit that the torque limit will be bypassed in the open direction.

Press ● to edit, adjust shown value using ▲ and ▼ and press ● to save selection. E.g. setting at 5% will bypass the torque limit between 0% and 5%.

The **[CL.BP.POSI.]** value dictates the travel away from the open position limit that the torque limit will be bypassed in the close direction.

Press ● to edit, adjust shown value using ▲ and ▼ and press ● to save selection. E.g. setting at 95% will bypass the torque limit between 95% and 100%.



9.4. Secondary Function Setting

CK Range actuators can be provided with optional add-ons that provide extra functionality. For instruction on setting secondary functions, please refer to the following documents which are available on www.rotork.com

CK Standard and CKR - refer to PUB111-003

CKc and CKRC - refer to PUB111-004

10. Maintenance, Monitoring and Troubleshooting

Routine Maintenance should include the following :

- Check actuator to valve fixing bolts for tightness.
- Ensure valve stems and drive nuts are clean and properly lubricated.
- If the motorized valve is rarely operated, a schedule of operation should be set up.
- Check the actuator for damage, loose or missing fixings.
- Ensure that there is not an excessive build up of dust or contaminate on the actuator.

11. Disposal / Recycling

User advice on disposal of your product at the end of its life. Please see table below. In all cases check local authority regulation before disposal.

Oil :

Unless specially ordered for extreme climatic conditions, actuators are dispatched with gearcases filled with SAE 80EP oil suitable for ambient temperatures ranging from -22 to 160 °F (-30 to 70 °C).

Base assembly :

O-rings grease: Multis EP2 / Lithoshield EP2 or equivalent for all temperature ranges.

Subject	Definition	Remarks / examples	Hazardous	Recyclable	EU Waste Code	Disposal
Electrical & Electronic	Printed circuit boards	All Products	Yes	Yes	20 01 35	Use specialist recyclers
	Wire	All Products	Yes	Yes	17 04 10	
Metals	Aluminium	Gearcases and covers	No	Yes	17 04 02	Use licensed recyclers
	Copper/Brass	Wire, gears, motor windings	No	Yes	17 04 01	
	Zinc	CK clutch Ring and associated components	No	Yes	17 04 04	
	Iron/Steel	Gears and bases	No	Yes	17 04 05	
	Mixed Metals	CK motor rotors	No	Yes	17 04 07	
Plastics	Glass filled nylon	Electronics chassis	No	No	17 02 04	Disposal as general commercial waste
	Unfilled	Gears, Window, Blanking plug	No	Yes	17 02 03	Use specialist recyclers
Oil /Grease	Mineral	Gearbox lubrication	Yes	Yes	13 02 04	Will require special treatment before disposal, use specialist recyclers or waste disposal companies
	Food Grade	Gearbox lubrication	Yes	Yes	13 02 08	
	Grease	Handwheel	Yes	No	13 02 08	
Rubber	Seals & Orings	Cover and shaft sealing	Yes	No	16 01 99	May require special treatment before disposal, use specialist waste disposal companies

12. Environmental

Standard CK actuators are suitable for applications where vibration and shock severity does not exceed the following:

Plant induced Vibration:	1g rms total for all vibration within the frequency range of 10 to 1000 Hz
Shock:	5g peak acceleration
Watertight:	IP68 EN 60529 (8 metres for 96 hours)
Temperature:	-30 to +70 °C (-22 to +158 °F)

rotork®

Keeping the World Flowing



www.**rotork**.com

A full listing of our worldwide sales and service network is available on our website.

Rotork plc
Brassmill Lane, Bath, UK
tel +44 (0)1225 733200
fax +44 (0)1225 333467
email mail@rotork.com

Rotork is a corporate member of the Institute of Asset Management

PUB111-007-00
Issue 01/17

As part of a process of on-going product development, Rotork reserves the right to amend and change specifications without prior notice. Published data may be subject to change. For the very latest version release, visit our website at www.rotork.com

The name Rotork is a registered trademark. Rotork recognizes all registered trademarks. Published and produced in the UK by Rotork Controls Limited. POWTG0117