GERMAN POOL

GPN Series
Shower Unit Electric Water Heater

GPN-4E/6E

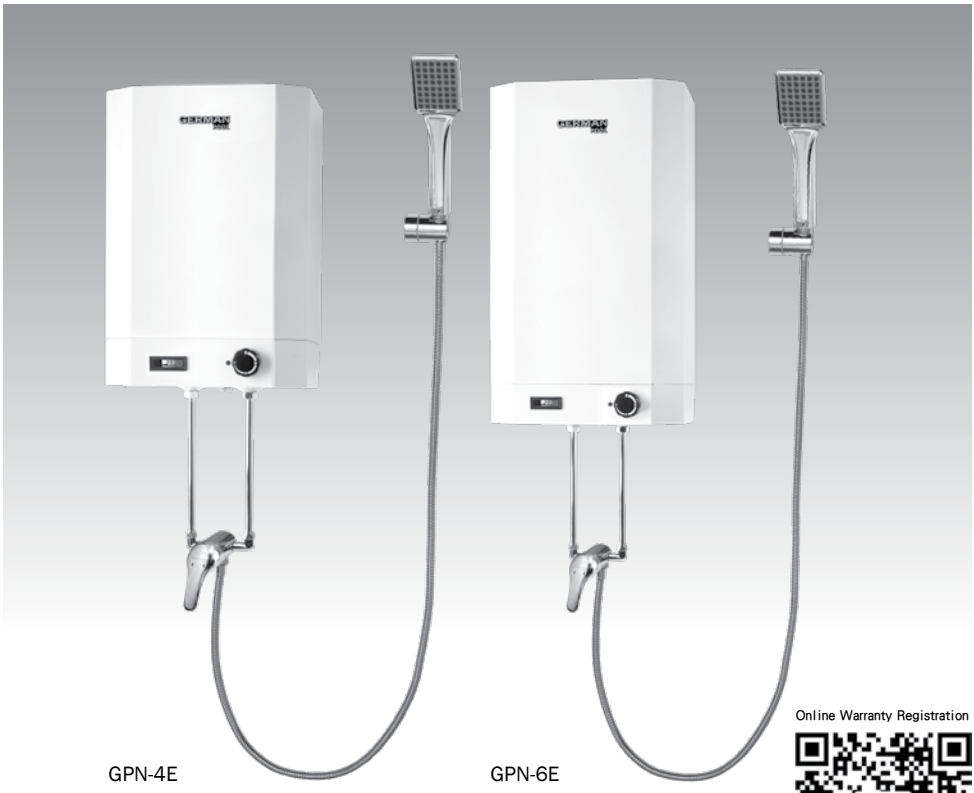

GPN-4E GPN-6E

Online Warranty Registration

Please read these instructions and warranty information carefully before use and keep them handy for future reference.

USER MANUAL

請即進行保用登記!

有關保用條款細則，請看本說明書最後一頁。

Please register your warranty information now!

For Warranty Terms & Conditions,

please refer to the last page of this user manual.

目錄 Table of Contents

產品特點 Features	04
配件裝置選擇 Component Options	05
產品結構 Product Structure	06
安裝圖 Installation Diagram	06
安裝說明 Installation Instructions	07
電路圖 Wiring Diagram	08
使用說明 Operating Instructions	09
產品規格 Specifications	10
專用節水花灑 Water Saving Shower Head	10
保用條款 Warranty Terms & Conditions	11

產品特點 Features

GPN電熱水器配備原廠低壓式混合水龍頭及花灑配件，適合於單點使用。

GPN and GPNB are a non-pressure water heaters designed for single-point application.

⚠ 警告

若用戶需要安裝任何非隨機配件，必須先與本公司認可之技術人員聯絡，否則本公司將有權拒絕提供任何保養服務。

⚠ Warning

Each unit is equipped with a standard open-outlet mixer and a shower set. Please install water heater in accordance to the instructions stated on this booklet. German Pool will NOT provide warranty service on any product installed with unauthorized components or devices.

不銹鋼內膽 Stainless Steel Inner Tank	採用長期耐高溫及受高壓容器專用之日本特殊不銹鋼製造，內膽結構堅固，保證防銹、耐壓及不受水質侵蝕。 Constructed of Japanese heavy gauge stainless steel, specially made for high temperature and pressure applications. It is durable and free of rust, corrosion, deformity and hassle.
保溫設計 Thermal Insulation	完密噴注式保溫層，使用先進合成樹脂纖維材料，保持熱水溫度，同 時將失溫程度減至最低，大大節省電能。 Optimal heat insulation is achieved by injected polyurethane foam.
發熱管 Heating Element	高質發熱管，發揮最高導熱效能，並內置超溫斷路器，確保安全。 High quality heating element with built-in thermal cut-out ensures maximum thermal efficiency and safety.
溫度調節器 Thermostat	溫度調節器自動恒溫，保持水溫在預調溫度，節省能源，並配合個人 使用熱水的習慣。 Thermostat provides automatic temperature control at preset temperature to accommodate individual bathing habits and save energy.
額定壓力 Rated Pressure	0 MPa
最大來水壓力 Max Inlet Water Pressure	0.6MPa
防水等級 Water Resistance	IPX4
外殼 Exterior Casing	採用堅固防侵蝕金屬片，原裝多層焗油。 Constructed of corrosion-proof metal with multi-layer finishing.
符合規格 Conformity	機電工程署電氣產品(安全)規例。 Electrical Products (Safety) Regulations, Hong Kong.
認證標準 Certifications	IEC 60335-2-21 IEC 60335-1
能源標籤 Energy Label	1級能源標籤 Grade 1
能源標籤參考編號及年份 Energy Label Reference No. / Year	E190002 / 2019 (GPN-4E) E190003 / 2019 (GPN-6E)

配件裝置選擇 Component Options

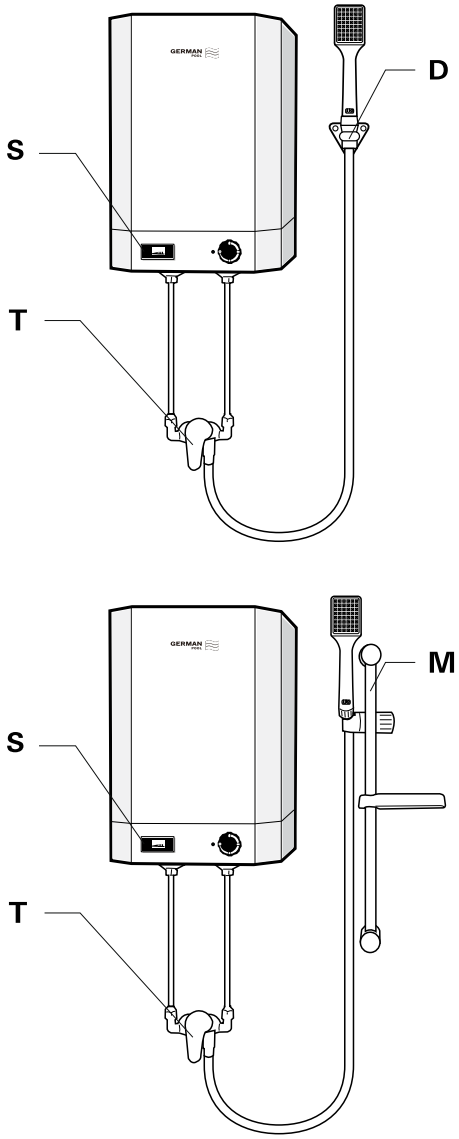

配件裝置選擇
Component Options

D : 插座式花灑頭
Plug-In Type Shower Head

S : 溫度顯示器
Thermometer

M: 直柱式花灑頭
Slide Bar Type Shower Head

T : 單控式混合龍頭
Single Lever Mixer

L : 搖擺式出水口 - 只適用於2加侖型號或以上(上圖沒有展示)
Swivel Outlet – for 2 gallon or above models only (not shown above)

產品結構 Product Structure

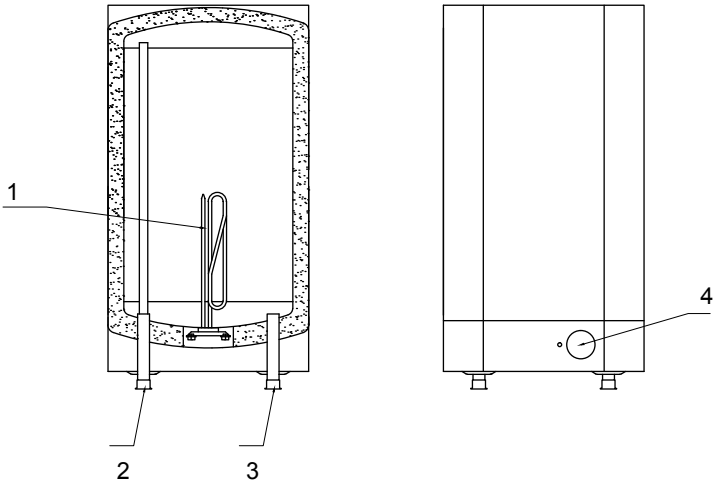

1 發熱線
2 出水位（熱）
3 入水位（冷）
4 恒溫器

1 Heating Element
2 Outlet (Hot)
3 Inlet (Cold)
4 Thermostat

安裝圖 Installation Diagram

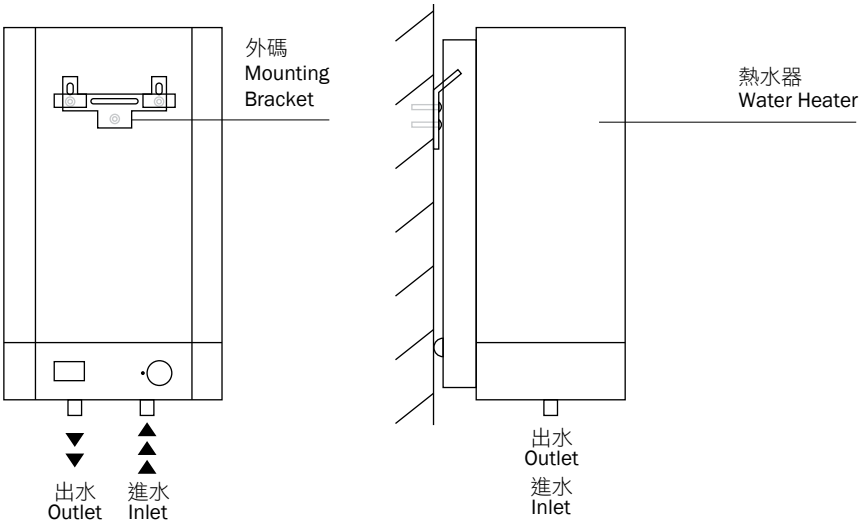

使用外碼時注意：確定爐的安裝位置後，請先用螺絲將外碼固定在牆上，再將爐後蓋上的方孔對準固定在牆上的外碼，向下將爐穩靠地固定掛在牆上。

Caution: After confirmation of installation location, properly secure the mounting bracket with screws on the wall, align the holes of the back plate of the water heater with the mounting bracket, and downwardly hang the water heater.

安裝說明 Installation Instructions

安裝前注意

安裝必須使用原廠配件。若不按指示方法安裝及使用而引致任何損壞，本公司概不負責。安裝工作應由專業持牌水電技術人員負責。

Pre-Installation Notice

Installation should be done by a licensed technician using the supplied parts. German Pool is not responsible for any defect or damage caused by incorrect or unauthorized installation.

掛牆定位

先將熱水器背板以膨脹螺絲安裝於承重的牆壁上，然後將熱水器背部凹孔扣在背板上，並調整至緊貼牆壁及保持垂直為佳。花灑頭插座以膨脹螺絲安裝於適當位置上。

Positioning

Position water heater near water tap / point of use in order to minimize heat loss. For wall-mount style, appropriate anchor screws must be used and wall should be strong enough to withstand the weight of water heater. Keep a minimal distance between wall and water heater.

水喉接駁

水喉管件直徑為½” 英吋，接駁妥當後應試看接駁位置有否漏水，妥當後即可將有紅點之熱水掣打開注水，直至花灑頭噴水即表示內膽經已注滿，並可將熱水掣關好。

Connecting Inlet and Outlet Pipes

The diameter of piping is ½” BSP. Make sure there is no leaking at the joints. Turn on hot water tap to fill up the inner tank until water flows from the shower head. Turn off hot water.

接電方法

由電箱獨立伸延一條適合之電線(見下表)至浴室門外接駁獨立開關掣，再將電線伸延至熱水器穿進灰色線夾接到電線排上分別接上水線(N)，火線(L)，及地線(⏚)等。

Electric Wiring

Use an independent wire (refer to table below) leading from the meter box and connect it to an independent on/off switch outside bathroom. Extend the wire through the grey wire grip on the water heater. Dismount the bottom plate and wire up Neutral (N), Life (L) and Earth (⏚) terminals.

⚠ 特別注意

本熱水器必須永久可靠地連接至水管，且不能使用軟管連接。

本熱水器必須永久可靠地連接地線。

⚠ Attention

Appliance intended to be permanently connected to the water mains and not connected by a hose-set.

This water heater must be earthed at all time.

安裝說明 Installation Instructions

發熱線功率 (千瓦) Heating Element Rating (kW)	所需電源(安培) Electric Current (A)	電源線最低要求(平方毫米) Wiring (mm^2)
1.5 kW	8 A (單相1PE)	1.5 mm^2
2 kW	10 A (單相1PE)	2.5 mm^2
3 kW	15 A (單相1PE)	2.5 mm^2
4 kW	20 A (單相1PE)	4.0 mm^2

電源開關掣

設於熱水器外用以切斷電源供應之開關掣，應全極切斷電源，兩極之間應保持最少3mm距離。

於浴室內安裝本電熱水器時必須遵照IEE之有關電線安裝條例規格接駁。電源開關應採用有顯示燈類型，當用戶需要作任何內膽清洗或維修，必先切斷電源。

測試使用

水喉與電源接駁妥當及內膽注滿水後，便可進行通電。此時指示燈會亮著，用戶便可將自動恒溫旋鈕調校至最高度數。當溫度達到75℃時，恒溫器即會自動停止加熱。選擇適當溫度後不應以恒溫旋鈕當作開關掣使用，因此舉會縮減該配件之使用壽命。

Power Switch

The external switch is used to completely disconnect water heater from power supply. It should disconnect all poles, and a contact separation of at least 3 mm must be present.

IEE wiring regulations should be observed when the water heater is installed in the bathroom.

Testing

Once the piping and wiring are connected and inner tank has been filled up with water, switch on the power. The indicator light will be lit. Turn control knob to the desired temperature (Max. temperature is 75°C). Do not use the control knob as an on/off switch.

電路圖 Wiring Diagram

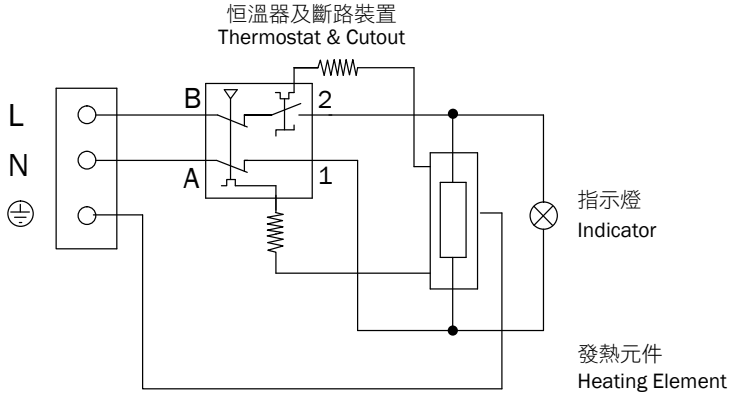

220 伏特 A.C. -單相
220 Volt A.C.-Single Phase

使用說明 Operating Instructions

⚠ 警告

1. 必須嚴密看管兒童，防止他們接觸及把玩熱水器，以免燙傷、觸電或受傷。
2. 本產品不適用於缺少了身體、感覺或精神能力，或缺乏經驗和知識的人（包括兒童）使用，除非他們在一個了解本產品使用的人監督指導下使用，並對他們的安全負責任。
3. 電源進線段應加裝漏電保護裝置，漏電保護裝置的額定動作電流應不大於30mA。
4. 若設置溫度超過50˚C，會有燙傷危險，所以必須混合冷水後才使用。

⚠ Warning

1. Do not allow children to touch or play with the water heater. Supervision is required during use, in order to prevent the danger of a scald, electrical shock or any other injuries.
2. This appliance is not intended for use by persons (including children) with reduced physical, sensory or mental capabilities, or lack of experience and knowledge, unless they have been given supervision or instruction concerning use of the appliance by a person responsible for their safety.
3. An electric-leakage protection device must be installed to the power inlet. The electric current of this protection device should be below 30mA.
4. If the temperature is set above 50˚C, cold water must be mixed in to prevent the danger of a scald.

停水期間

停水時不應將熱水器內之存水用盡，否則會導致發熱線損壞。恢復供水後，應先扭開熱水掣直至有水從花灑流出。待內膽注滿水後，用戶便可重新開啟電源。

水質問題

若來水水源為河水、井水、地下水或礦物質含量較高，用戶必需經常定期清洗發熱線以確保發熱線正常運作及發揮最佳製熱效能。

花灑頭滴水

因冷縮熱脹原理，熱水器內膽當達到高溫時便會有少量水在花灑頭流出。

出水位

出水位乃本熱水器之排氣管，除德國寶指定之花灑配件外，不得接駁任何其他水喉配件或裝置。

Water Shortage

During water shortage, do not drain water from inner tank. The heating element would be damaged if it is not submerged under water. When water supply resumes, turn on hot water tap and let water flows through the shower head before switching on the power.

Source of Water Supply

If the water source is a river, a well, underground water or has relatively high mineral content, user must clean the heating element regularly to ensure it will operate at optimum thermal efficiency.

Dripping

Due to thermal expansion, small amount of water may drip off from the shower head when the inner tank temperature is very high.

Outlet

The outlet of the water heater is supposed to act as a vent and should not be connected to any unauthorized piping attachment or device.

專用節水花灑 Water Saving Shower Head

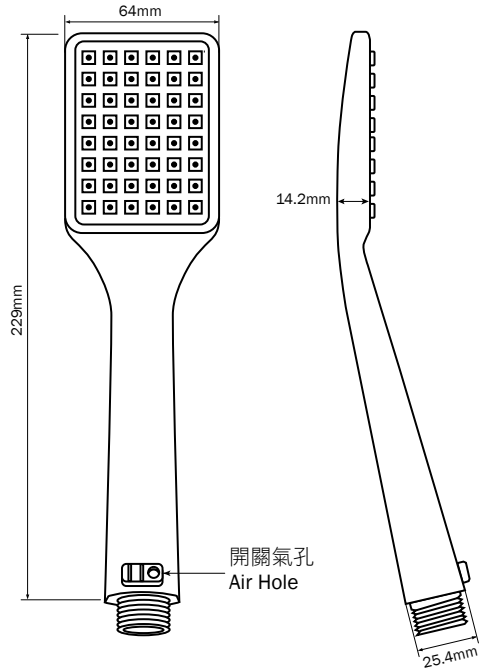

創新空氣加壓技術
Air Jet Compression Technology

打開氣孔加入空氣，保持節水效果
同時增強水勢。
Air is drawn through the air hole to increase water pressure.

本電熱水器必須使用德國寶專用慳水節能花灑頭。

The GPU Series can model must use our Water & Energy Saving Aerated Showerhead as a necessary accessory.

產品規格 Specifications

	電壓 Voltage	功率 Power	尺寸 Dimension (MM)	容量 Capacity	淨重 Net Weight	防水等級 Water Resistance	額定壓力 Rated Pressure	最大來水壓力 Max. Inlet Water Pressure
GPN-4E	220V	3kW	(H) 500 (W) 330 (D) 245	15 L	10.2kg	IPX4	0 MPa	0.6 MPa
GPN-6E	220V	3kW	(H) 680 (W) 330 (D) 245	23 L	13.2kg	IPX4	0 MPa	0.6 MPa

* 正常情況下，如供水系統之來水水壓超過 0.6 MPa，用戶必須額外加裝減壓器將水壓調低。
如來水壓力超過 0.6 MPa 而用戶未有安裝減壓器，本公司有權拒絕為熱水器進行任何維修。

*Under normal working conditions, incoming pressure should not exceed 0.6 MPa. Otherwise, a separate pressurecontrol device is necessary. When incoming water pressure exceeds 0.6 MPa, German Pool will not provide anyrepair service until a pressure control device is installed.

產品規格及設計如有變更，恕不另行通知。中英文版本如有出入，一概以中文版為準。最新版本以 www.germanpool.com 網上版為準。

If there is any inconsitency or ambiguity between the English version and Chinese version, the Chnese version shall prevail.
Refer to www.germanpool.com for the most up-to-date version.

保用條款

此保用提供德國寶產品之機件在正常使用下壹年保用(自購買日起計算)。

* 貴戶須在購機十天內，以下列其中一種方式向本公司登記資料，保用手續方正式生效：

1) 填妥本公司網頁內之保用登記表格
www.germanpool.com/warranty

2) 填妥保用登記卡，郵寄至本公司。

Warranty Terms & Conditions

Under normal operations, the product will gurantee a 1-year full warranty provided by German Pool (effective from the date of purchase).

* This warranty is not valid until customer registration information is received by our Service Centre within 10 days of purchase via one of the following means:

1) Visit our website and register online:
www.germanpool.com/warranty

2) Complete all the fields on the attached Warranty Card and mail it back to our Customer Service Centre.

另請填妥以下表格並與正本發票一併保存，以便維修時核對資料。用戶提供之所有資料必須正確無誤，否則免費保用將會無效。
Please fill out the form below. This information and the original purchase invoice will be required for any repairs. Warranty will be invalidated if information provided is found to be inaccurate.

型號 Model No. : ☐ GPN-4E ☐ GPN-6E

機身號碼 Serial No. : _____ 發票號碼 Invoice No. : _____

購買商號 Purchased From : _____ 購買日期 Purchase Date : _____

1. 未能出示購買發票正本者，將不獲免費維修服務。
2. 用戶應依照說明書的指示操作。本保用並不包括：
   - 上門安裝、檢驗、維修或更換零件之人工以及一切運輸費用；
   - 因天然與人為意外造成的損壞 (包括運輸及其他)；
   - 電源接合不當、不依說明書而錯誤或疏忽使用本機所引致之損壞。
3. 於下列情況下，用戶之保用資格將被取消：
   - 購買發票有任何非認可之刪改；
   - 產品被用作商業或工業用途；
   - 產品經非認可之技術人員改裝或加裝任何配件；
   - 機身編號被擅自塗改、破壞或刪除。
4. 總代理有權選擇維修或更換配件或其損壞部份。
5. 產品一經被轉讓，其保用即被視作無效。

1. Customer who fails to present original purchase invoice will not be eligible for free warranty service.
2. Customer should always follow the operating instructions. This warranty does not apply to:
   - labour costs for on-site installation, check-up, repair, replacement of parts and other transportation costs;
   - damages caused by accidents of any kind (including material transfer and others);
   - operating failures resulting from applying incorrect voltage, improper usage, and unauthorized installations or repairs.
3. This warranty is invalid if:
   - the purchase invoice is modified by an unauthorized party;
   - the product is used for any commercial or industrial purposes;
   - the product is repaired or modified by unauthorized personnel, or unauthorized parts are installed;
   - the serial number is modified, damaged or removed from the product.
4. German Pool will, at its discretion, repair or replace any defective part.
5. This warranty will be void if there is any transfer of ownership from the original purchaser.

客戶服務及維修中心

香港

九龍灣啟興道1-3號
九龍貨倉10樓
電話：+852 2333 6249
傳真：+852 2356 9798
電郵：repairs@germanpool.com

澳門

澳門俾利喇街145號
寶豐工業大廈3樓
電話：+853 2875 2699
傳真：+853 2875 2661

Customer Service & Repair Centre

Hong Kong

10/F, Kowloon Godown
1-3 Kai Hing Road, Kowloon Bay,
Kowloon, Hong Kong
Tel : +852 2333 6249
Fax : +852 2356 9798
Email : repairs@germanpool.com

Macau

3/F, Edificio Industrial Pou Fung,
145 Rua de Francisco Xavier Pereira,
Macau
Tel : +853 2875 2699
Fax : +853 2875 2661

此保用只適用於香港及澳門 | This warranty is valid only in Hong Kong and Macau

GERMAN
POOL

German Pool (Hong Kong) Limited

Hong Kong
Room 113, Newport Centre Phase II, 116 Ma Tau Kok Road, Tokwawan, Kowloon, Hong Kong
Tel: +852 2773 2888
Fax:+852 2765 8215

China
8th, Xinxiang Road, Wusha Industrial Park, Daliang, Shunde, Foshan, Guangdong
Tel:+86 757 2980 8308
Fax:+86 757 2980 8318

Macau
3/F, Edificio Industrial Pou Fung, 145 Rua de Francisco Xavier Pereira, Macau
Tel:+853 2875 2699
Fax:+853 2875 2661

香港《S MARK》安全認證
中國銀樓/家電行業十大影響力品牌
CEO非凡品牌大賞
香港優質商號
香港工商業獎
2007 最具潛質創建品牌企業獎
香港中小企業最佳拍檔大獎
香港消費者推崇品牌
香港《Q嘜》優質服務證書
香港名牌十年成就獎 HONG KONG TOP BRAND TEN YEAR ACHIEVEMENT AWARD

©All rights reserved. Copying, reproducing or using the contents of this manual is not allowed without prior authorization from German Pool, violators will be prosecuted.

www.germanpool.com

GPN-4E-6E-M-19(1)