Maintenance and Service Guide

SUMMARY

This guide provides information about spare parts, removal and replacement of parts, security, backing up, and more.

© Copyright 2021 HP Development Company, L.P.

Bluetooth is a trademark owned by its proprietor and used by HP Inc. under license. Intel, Celeron, and Pentium are trademarks of Intel Corporation or its subsidiaries in the U.S. and/or other countries. Chrome, Chrome OS, Chromebook, Google, and Google Drive are trademarks of Google LLC. SDHC, SDXC, and microSD are trademarks or registered trademarks of SD-3C LLC. Microsoft and Windows are either registered trademarks or trademarks of Microsoft Corporation in the United States and/or other countries. USB Type-C and USB-C are registered trademarks of USB Implementers Forum. DisplayPort™ and the DisplayPort™ logo are trademarks owned by the Video Electronics Standards Association (VESA®) in the United States and other countries.

The information contained herein is subject to change without notice. The only warranties for HP products and services are set forth in the express warranty statements accompanying such products and services. Nothing herein should be construed as constituting an additional warranty. HP shall not be liable for technical or editorial errors or omissions contained herein.

First Edition: June 2021

Document Part Number: M74093-001

Product notice

This guide describes features that are common to most models. Some features may not be available on your computer.

Software terms

By installing, copying, downloading, or otherwise using any software product preinstalled on this computer, you agree to be bound by the terms of the HP End User License Agreement (EULA). If you do not accept these license terms, your sole remedy is to return the entire unused product (hardware and software) within 14 days for a full refund subject to the refund policy of your seller.

For any further information or to request a full refund of the price of the computer, please contact your seller.

Safety warning notice

Reduce the possibility of heat-related injuries or of overheating the computer by following the practices described.

⚠ **WARNING!** To reduce the possibility of heat-related injuries or of overheating the computer, do not place the computer directly on your lap or obstruct the computer air vents. Use the computer only on a hard, flat surface. Do not allow another hard surface, such as an adjoining optional printer, or a soft surface, such as pillows or rugs or clothing, to block airflow. Also, do not allow the AC adapter to come into contact with the skin or a soft surface, such as pillows or rugs or clothing, during operation. The computer and the AC adapter comply with the user-accessible surface temperature limits defined by applicable safety standards.

Table of contents

1 Product description 1

2 Components 4

Right 4
Left 5
Display 6
Keyboard area 7
Touchpad 7
Speakers 7
Special keys 8
Labels 9

3 Illustrated parts catalog 11

Computer major components 11
Display assembly subcomponents 14
Cables 16
Miscellaneous parts 16

4 Removal and replacement procedures preliminary requirements 18

Tools required 18
Service considerations 18
Plastic parts 18
Cables and connectors 18
Drive handling 18
Electrostatic discharge information 19
Generating static electricity 19
Preventing electrostatic damage to equipment 20
Personal grounding methods and equipment 20
Grounding the work area 21
Recommended materials and equipment 21
Cleaning your computer 22
Enabling HP Easy Clean (select products only) 22
Removing dirt and debris from your computer 22
Cleaning your computer with a disinfectant 23
Caring for wood veneer (select products only) 24
Packaging and transporting guidelines 24

Accessing support information 24

5 Removal and replacement procedures for authorized service provider parts 26

Component replacement procedures 26

Preparation for disassembly 26

Bottom cover 26

Battery 28

WLAN module 29

Speakers 31

Touchpad 31

USB board 33

System board 34

Power connector (DC in) cable 38

Display assembly 39

Keyboard with top cover 47

6 Backing up, resetting, and recovering 49

Backing up 49

Resetting 49

Recovering 49

Installing the Chromebook Recovery Utility 50

Creating recovery media 50

Recovering the Chrome operating system 50

Setting up your computer after a reset or recovery 51

Erasing and reformatting the recovery media 51

7 Specifications 52

Computer specifications 52

Display specifications 52

8 Power cord set requirements 54

Requirements for all countries 54

Requirements for specific countries and regions 54

9 Recycling 56

Index 57

1 Product description

This table provides detailed product information.

Table 1-1 Product components and their descriptions

Category	Description
Product Name	**HP Chromebook™ 14a**
	Model numbers: 14a-na0xxx, 14a-na1xxx
	CTO Model: 14at-na000, 14at-na100
Processor	Intel® Pentium® Silver Processor N5030 (1.1 GHz, turbo up to 3.1 GHz, 2400 MHz FSB, 4 MB L2 cache, quad core, 6 W; Intel UHD 605 Graphics)
	Intel Pentium Silver N5000 (1.1 GHz, up to 2.7 GHz, 2400 MHz FSB, 4 MB L2 cache, quad core, 6 W; Intel UHD Graphics)
	Intel Celeron® N4020 (1.1 GHz, up to 2.8 GHz, 2400 MHz FSB, 4 MB L2 cache, dual core, 6 W; Intel UHD Graphics)
	Intel Celeron N4000 (1.1 GHz, up to 2.6 GHz, 2400 MHz FSB, 4 MB L2 cache, dual core, 6 W; Intel UHD Graphics)
	Intel Pentium Silver N6000 (1.1 GHz, up to 3.3 GHz, 2933 MHz FSB, 4 MB cache, quad core, 6 W; Intel UHD Graphics)
	Intel Celeron N4500 (1.1 GHz, up to 2.8 GHz, 2933 MHz FSB, 4 MB cache, dual core, 6 W; Intel UHD Graphics)
Graphics	**Internal graphics**
	Intel UHD Graphics
	Supports HD Decode, DX12, and HDMI
Display	**35.6 cm (14.0 in), WLED, slim (3.0 mm), narrow bezel, 45% NTSC (National Television Standards Committee)**
	High-definition (HD) (1366 × 768), antiglare, SVA (super vertical alignment), eDP (embedded DisplayPort) 1.2, 220 nits
	HD, BrightView, SVA, eDP, 220 nits, Touch-on Panel (TOP)
	Full high-definition (FHD) (1920 × 1080), antiglare, UWVA, eDP 1.2, 250 nits
	FHD, antiglare, UWVA, eDP, 250 nits, Touch-on Panel (TOP)
Memory	**Onboard, nonupgradeable**
	LPDDR4-2400 dual-channel support (Pentium Silver N5000, Celeron N4020/N4000)
	LPDDR4-2933 dual-channel support (Pentium Silver N6000, Celeron 4500)
	Supports the following configurations:
	• 8 GB
	• 4 GB
Primary storage	**On-board embedded MultiMedia Controller (eMMC v5.0) configuration**
	128 GB

Table 1-1 Product components and their descriptions (continued)

Category	Description
	64 GB
	32 GB
Audio and video	Dual speakers
	HP Wide Vision Camera (720p)
	Dual-array microphone with appropriate software, echo cancellation, and noise suppression
Wireless	**Integrated wireless options with dual antennas**
	Realtek RTL8822CE 802.11b/g/n/a/ac (2 × 2) MU-MIMO supported and Bluetooth® 5.0
	Intel Wi-Fi 6 AX201 802.11ax (2 × 2) and Bluetooth 5
Media card reader	HP Multi-Format Digital Media Card Reader
	Supports microSD™, SDHC™, SDXC™
	Push-push insertion/removal
Ports	Audio-out (headphone)/audio-in (microphone) combo jack
	(2) USB 3.2 Type C • Supports power delivery • Supports data transfer • Supports DisplayPort 1.2 out up to 4096 × 2304 @ 60 Hz and HDMI 1.4 out through adapter (Pentium Silver N5000, Celeron N4020/N4000) • Supports DisplayPort 1.4 out up to 3840 × 2160 @ 60 Hz and HDMI 1.4 out through adapter (Pentium Silver N6000, Celeron 4500)
	(1) USB 3.2 Type-A
Keyboard/pointing devices	**Google™ Keyboard with clickpad**
	Full size, island style, backlit
	Full size, island style, not backlit
Power requirements	**Battery**
	2 cell, 47 Whr, lithium-ion polymer
	Long life
	Fast charge
	AC adapter, USB Type-C®
	45 W, nPFC (non-power factor correcting), straight,1.8 m (6.0 ft)
	Power cord
	C5, conventional, 1 m (3.3 ft)
Security	H1 Secure Microcontroller
Operating system	Google Chrome™ 64

Table 1-1 Product components and their descriptions (continued)

Category	Description
Serviceability	**End user replaceable parts**
	AC adapter

2 Components

Your computer features top-rated components. This chapter provides details about your components, where they are located, and how they work.

Right

Use the illustration and table to identify the components on the right side of the computer.

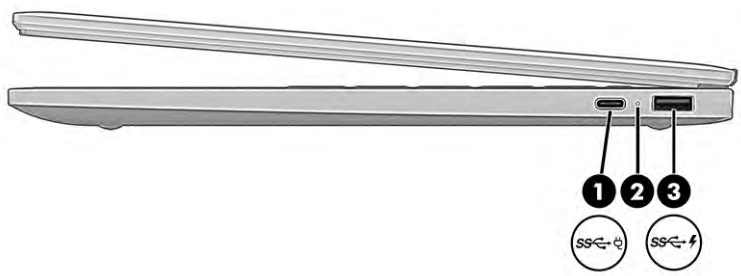

Table 2-1 Right-side components and their descriptions

Component			Description
(1)		USB Type-C® power connector and SuperSpeed 5 Gbps port with DisplayPort™ output	Connects an AC adapter that has a USB Type-C connector, supplying power to the computer and, if needed, charging the computer battery. – and – Connects a USB device, provides high-speed data transfer, and (for select products) charges small devices (such as a smartphone) when the computer is on or in Sleep mode. **NOTE:** Use a standard USB Type-C charging cable or cable adapter (purchased separately) when charging a small external device.
(2)		AC adapter and battery light	• White: The AC adapter is connected and the battery is fully charged. • Amber: The AC adapter is connected and the battery is charging. • Blinking amber: The battery has an error. • Off: The battery is not charging.
(3)		USB SuperSpeed 5 Gbps port with HP Sleep and Charge	Connects a USB device, provides high-speed data transfer, and charges small devices (such as a smartphone), even when the computer is off. **NOTE:** Use a standard USB Type-A charging cable or cable adapter (purchased separately) when charging a small external device.

Left

Use the illustration and table to identify the components on the left side of the computer.

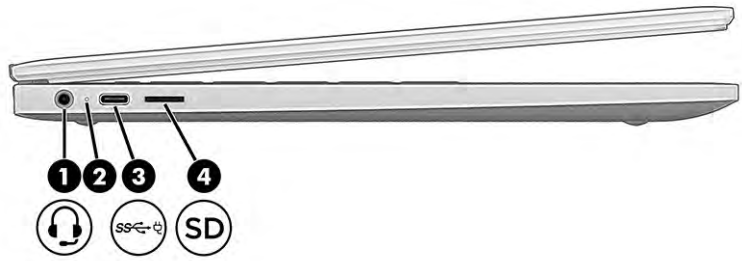

Table 2-2 Left-side components and their descriptions

Component			Description
(1)		Audio-out (headphone)/Audio-in (microphone) combo jack	Connects optional powered stereo speakers, headphones, earbuds, a headset, or a television audio cable. Also connects an optional headset microphone. This jack does not support optional standalone microphones. **WARNING!** To reduce the risk of personal injury, adjust the volume before putting on headphones, earbuds, or a headset. For additional safety information, see the *Regulatory, Safety, and Environmental Notices.* **NOTE:** When a device is connected to the jack, the computer speakers are disabled.
(2)		AC adapter and battery light	• White: The AC adapter is connected and the battery is fully charged. • Amber: The AC adapter is connected and the battery is charging. • Blinking amber: The battery has an error. • Off: The battery is not charging.
(3)		USB Type-C power connector and SuperSpeed 5 Gbps port with DisplayPort output	Connects an AC adapter that has a USB Type-C connector, supplying power to the computer and, if needed, charging the computer battery. – and – Connects a USB device, provides high-speed data transfer, and (for select products) charges small devices (such as a smartphone) when the computer is on or in Sleep mode. **NOTE:** Use a standard USB Type-C charging cable or cable adapter (purchased separately) when charging a small external device.
(4)	SD	Memory card reader (select products only)	Reads optional memory cards that store, manage, share, or access information. To insert a card: 1. Hold the card label-side up, with the connectors facing the computer. 2. Insert the card into the memory card reader, and then press in on the card until it is firmly seated. To remove a card:

Table 2-2 Left-side components and their descriptions (continued)

Component	Description
	▲ Press in on the card, and then remove it from the memory card reader.

Display

Use the illustration and table to identify the components on the display.

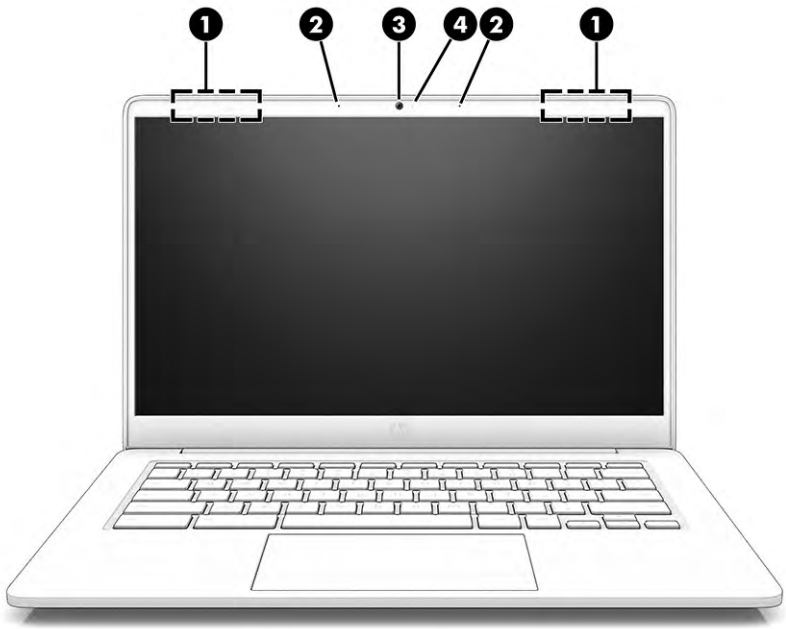

Table 2-3 Display components and their descriptions

Component		Description
(1)	WLAN antennas*	Send and receive wireless signals to communicate with wireless local area networks (WLANs).
(2)	Internal microphones	Record sound.
(3)	Camera	Allows you to video chat, record video, and record still images. **NOTE:** Camera functions vary depending on the camera hardware and software installed on your product.
(4)	Camera light	On (white): The camera is in use. Off: The camera is turned off.

*The antennas are not visible from the outside of the computer. For optimal transmission, keep the areas immediately around the antennas free from obstructions.

For wireless regulatory notices, see the section of the *Regulatory, Safety, and Environmental Notices* that applies to your country or region.

Keyboard area

Keyboards can vary by language.

Touchpad

The touchpad settings and components are described here.

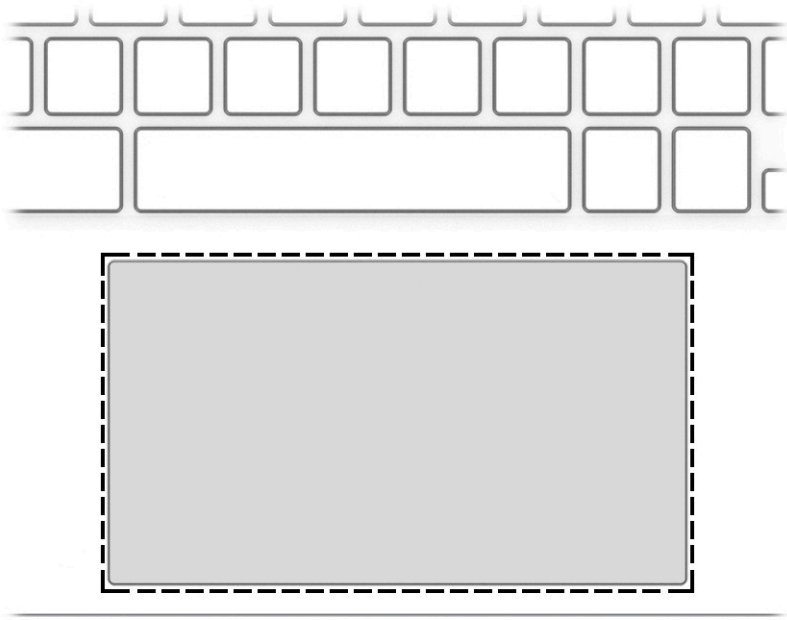

Table 2-4 Touchpad component and description

Component	Description
Touchpad zone	Reads your finger gestures to move the pointer or activate items on the screen.

Speakers

Speakers are located on the right and left of the keyboard.

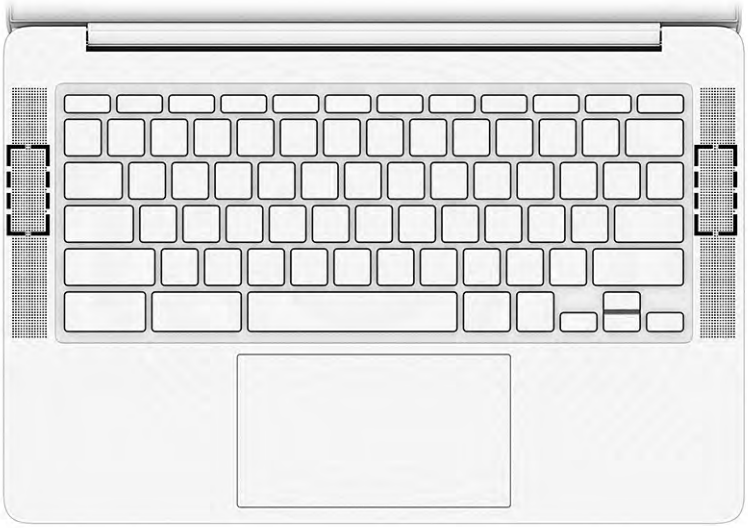

Table 2-5 Speakers and their description

Component	Description
Speakers	Produce sound.

Special keys

Use the illustration and table to locate the special keys.

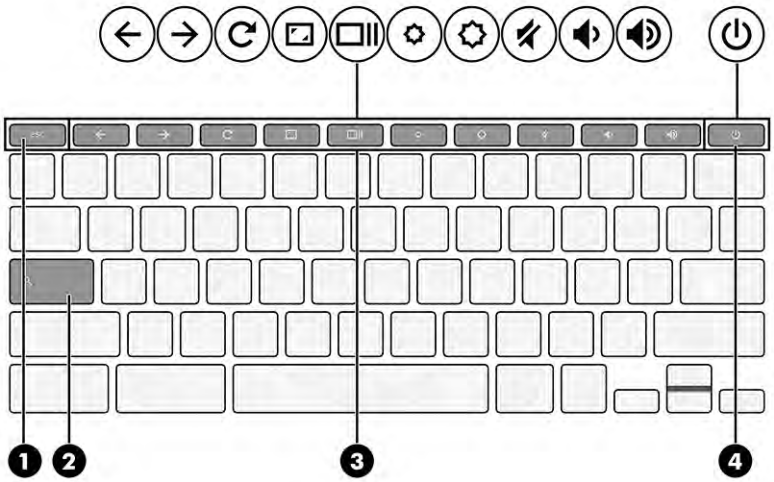

Table 2-6 Special keys and their descriptions

Component		Description
(1)	esc key	Activates certain computer functions when pressed in combination with other keys, such as tab or shift.

Table 2-6 Special keys and their descriptions (continued)

Component		Description
(2)	Search key	Opens a search box.
(3)	Action keys	Execute frequently used system functions.
(4)	Power key	• When the computer is off, press the key briefly to turn on the computer. • When the computer is on, press the key briefly to initiate Sleep. • When the computer is in the Sleep state, press the key briefly to exit Sleep (select products only). • When the computer is in Hibernation, press the key briefly to exit Hibernation. **IMPORTANT:** Pressing and holding down the power key results in the loss of unsaved information. If the computer has stopped responding and shutdown procedures are ineffective, press and hold the power key for at least 10 seconds to turn off the computer.

Labels

The labels affixed to the computer provide information that you might need when you troubleshoot system problems or travel internationally with the computer. Labels can be in paper form or imprinted on the product.

IMPORTANT: Check the following locations for the labels described in this section: the bottom of the computer, inside the battery bay, under the service door, on the back of the display, or on the bottom of a tablet kickstand.

- Service label—Provides important information to identify your computer. When contacting support, you might be asked for the serial number, the product number, or the model number. Locate this information before you contact support.

  Your service label will resemble one of the following examples. Refer to the illustration that most closely matches the service label on your computer.

Table 2-7 Service label components

Component	
(1)	Serial number
(2)	Product ID
(3)	HP product name and model number

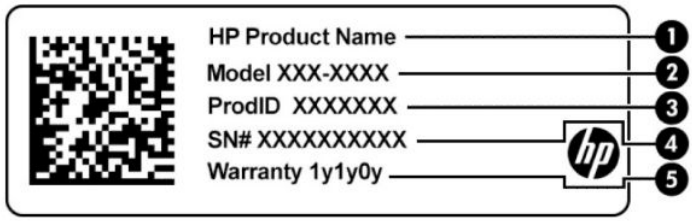

Table 2-8 Service label components

Component	
(1)	HP product name
(2)	Model number
(3)	Product ID
(4)	Serial number
(5)	Warranty period

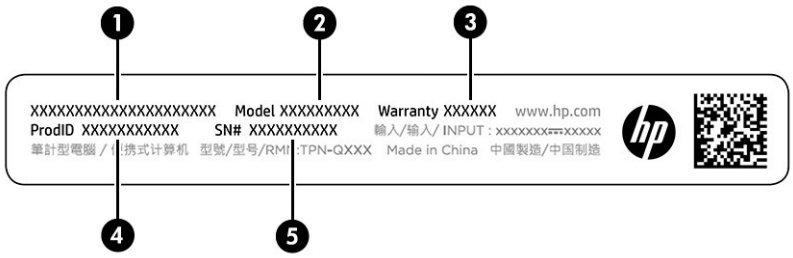

Table 2-9 Service label components

Component	
(1)	HP product name
(2)	Model number
(3)	Warranty period
(4)	Product ID
(5)	Serial number

- Regulatory labels—Provide regulatory information about the computer.
- Wireless certification labels—Provide information about optional wireless devices and the approval markings for the countries or regions in which the devices have been approved for use.

3 Illustrated parts catalog

Use this table to determine the spare parts that are available for the computer.

Computer major components

To identify the computer major components, use this illustration and table.

NOTE: HP continually improves and changes product parts. For complete and current information about supported parts for your computer, go to http://partsurfer.hp.com, select your country or region, and then follow the on-screen instructions.

NOTE: Details about your computer, including model, serial number, product key, and length of warranty, are on the service tag at the bottom of your computer.

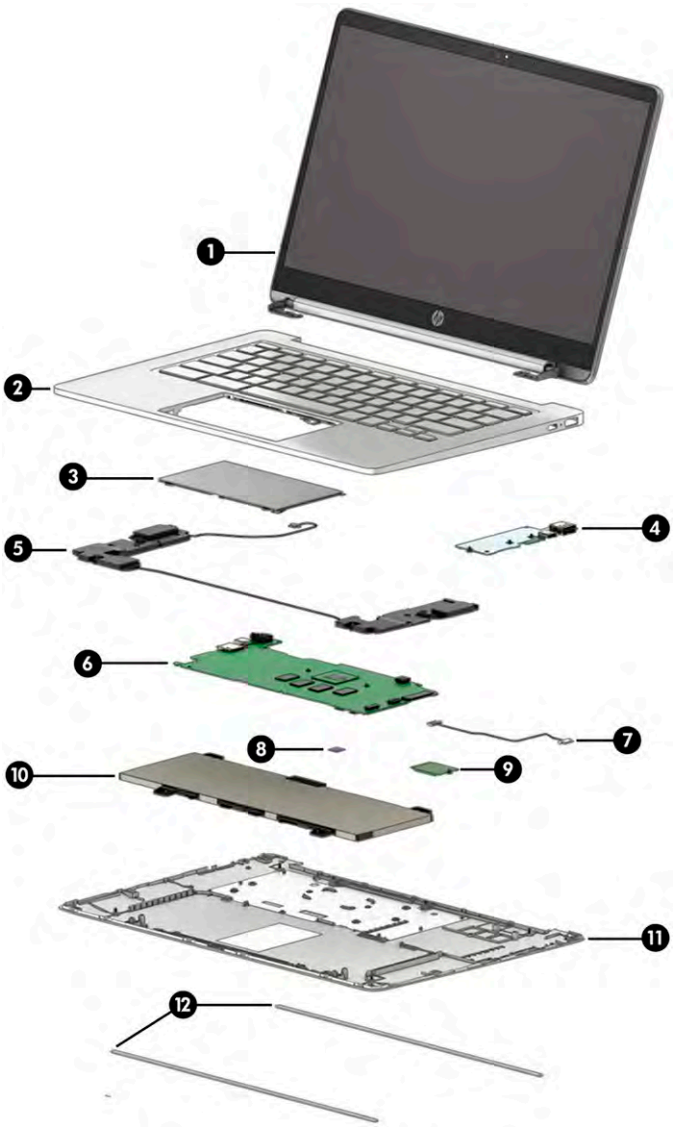

Table 3-1 Computer major component descriptions and part numbers

Item	Component	Spare part number
(1)	**Display assembly** **NOTE:** Display assemblies are spared only at the subcomponent level.	
(2)	**Top cover with keyboard**	
	Snow white; no backlight	L91515-xx1
	Snow white; backlit	L91516-xx1
	Ash grey; no backlight	L91511-xx1
	Ash grey; backlit	L91512-xx1
	Natural silver; no backlight	L91513-xx1
	Natural silver; backlit	L91514-xx1
	Jet black, no backlight, no B&O logo on top cover	M74072-xx1
	Jet black, backlit, no B&O logo on top cover	M74073-xx1
	Snow white, no backlight, no B&O logo on top cover	M74074-xx1
	Snow white, backlit, no B&O logo on top cover	M74075-xx1
	Natural silver, no backlight, no B&O logo on top cover	M75313-xx1
	Natural silver, backlit, no B&O logo on top cover	M75314-xx1
	Ash grey, no backlight, no card reader	M75857-xx1
	Ash grey, backlit, no card reader	M75858-xx1
	Natural silver, no backlight, no card reader	M75859-xx1
	Natural silver, backlit, no card reader	M75860-xx1
	Snow white, no backlight, no card reader	M75861-xx1
	Snow white, backlit, no card reader	M75862-xx1
(3)	**Touchpad** **NOTE:** The touchpad cable is available as spare part number L91527-001.	
	For use in models with Celeron N4000/N4020 or Pentium Silver N5030 processors	L91526-001
	For use in models with Pentium Silver N6000 or Celeron N4500 processors	M74070-001
(4)	**USB board** **NOTE:** USB cables are available as spare part number L73309-001 (high speed) and L73310-001 (low speed).	
	For use in models with Celeron N4000/N4020 or Pentium Silver N5030 processors	L91522-001
	For use in models with Pentium Silver N6000 or Celeron N4500 processors	M74071-001
(5)	**Speaker Kit**	L91528-001
(6)	**System board** (includes integrated processor, system memory, and eMMC storage; includes replacement thermal material) **NOTE:** The system board thermal pad is available as spare part number L76600-001.	

Table 3-1 Computer major component descriptions and part numbers (continued)

Item	Component	Spare part number
	Intel Pentium Silver N6000 processor, 8 GB system memory, and 128 GB eMMC memory	M74067-001
	Intel Pentium Silver N6000 processor, 4 GB system memory, and 64 GB eMMC memory	M74066-001
	Intel Pentium Silver N5030 processor, 8 GB system memory, and 128 GB eMMC memory	L91521-001
	Intel Pentium Silver N5030 processor, 8 GB system memory, and 128 GB eMMC memory, models with a backlit keyboard	M21214-001
	Intel Pentium Silver N5030 processor, 8 GB system memory, and 128 GB eMMC memory, models with a backlit keyboard, no card reader	M75856-001
	Intel Pentium Silver N5030 processor, 8 GB system memory, and 128 GB eMMC memory, no card reader	M81923-001
	Intel Pentium Silver N5030 processor, 4 GB system memory, and 64 GB eMMC memory	L91520-001
	Intel Pentium Silver N5030 processor, 4 GB system memory, and 64 GB eMMC memory, models with a backlit keyboard	M21213-001
	Intel Pentium Silver N5030 processor, 4 GB system memory, and 64 GB eMMC memory, no card reader	M75852-001
	Intel Pentium Silver N5030 processor, 4 GB system memory, and 64 GB eMMC memory, models with a backlit keyboard, no card reader	M75855-001
	Intel Pentium Silver N5000 processor, 8 GB system memory, and 128 GB eMMC memory	M03106-001
	Intel Pentium Silver N5000 processor, 8 GB system memory, and 128 GB eMMC memory, models with a backlit keyboard	M03111-001
	Intel Pentium Silver N5000 processor, 4 GB system memory, and 64 GB eMMC memory	M00111-001
	Intel Pentium Silver N5000 processor, 4 GB system memory, and 64 GB eMMC memory, models with a backlit keyboard	M03109-001
	Intel Celeron N4500 processor, 8 GB system memory, and 128 GB eMMC memory	M74065-001
	Intel Celeron N4500 processor, 4 GB system memory, and 64 GB eMMC memory	M74064-001
	Intel Celeron N4500 processor, 4 GB system memory, and 32 GB eMMC memory	M74063-001
	Intel Celeron N4020 processor, 8 GB system memory, and 128 GB eMMC memory	L91519-001
	Intel Celeron N4020 processor, 8 GB system memory, and 128 GB eMMC memory, no card reader	M81922-001
	Intel Celeron N4020 processor, 4 GB system memory, and 128 GB eMMC memory, models with a backlit keyboard	M21212-001
	Intel Celeron N4020 processor, 4 GB system memory, and 128 GB eMMC memory, models with a backlit keyboard, no card reader	M75854-001
	Intel Celeron N4020 processor, 4 GB system memory, and 64 GB eMMC memory	L91518-001
	Intel Celeron N4020 processor, 4 GB system memory, and 64 GB eMMC memory, models with a backlit keyboard	M21211-001
	Intel Celeron N4020 processor, 4 GB system memory, and 64 GB eMMC memory, models with a backlit keyboard, no card reader	M81924-001
	Intel Celeron N4020 processor, 4 GB system memory, and 64 GB eMMC memory, no card reader	M75851-001
	Intel Celeron N4020 processor, 4 GB system memory, and 32 GB eMMC memory	L91517-001

Table 3-1 Computer major component descriptions and part numbers (continued)

Item	Component	Spare part number
	Intel Celeron N4020 processor, 4 GB system memory, and 32 GB eMMC memory, models with a backlit keyboard	M21210-001
	Intel Celeron N4020 processor, 4 GB system memory, and 32 GB eMMC memory, models with a backlit keyboard, no card reader	M75853-001
	Intel Celeron N4020 processor, 4 GB system memory, and 32 GB eMMC memory, no card reader	M75850-001
	Intel Celeron N4000 processor, 8 GB system memory, and 128 GB eMMC memory	M03105-001
	Intel Celeron N4000 processor, 8 GB system memory, and 128 GB eMMC memory, models with a backlit keyboard	M03110-001
	Intel Celeron N4000 processor, 4 GB system memory, and 128 GB eMMC memory, models with a backlit keyboard	M07242-001
	Intel Celeron N4000 processor, 4 GB system memory, and 64 GB eMMC memory	M00110-001
	Intel Celeron N4000 processor, 4 GB system memory, and 64 GB eMMC memory, models with a backlit keyboard	M03108-001
	Intel Celeron N4000 processor, 4 GB system memory, and 32 GB eMMC memory	M00109-001
	Intel Celeron N4000 processor, 4 GB system memory, and 32 GB eMMC memory, models with a backlit keyboard	M03107-001
	Thermal pad, system board	L76600-001
(7)	**Power connector cable**	L99191-001
(8)	**Thermal pad**	L76600-001
(9)	**WLAN module**	
	Realtek RTL8822CE 802.11b/g/n/a/ac (2 × 2) MU-MIMO supported and Bluetooth 5.0	L44796-005
	Intel Wi-Fi 6 AX201-W + Bluetooth 5 (non-vPro)	L92724-005
(10)	**Battery** (2 cell, 47 Whr)	L75783-005
(11)	**Bottom cover**	L91523-001
(12)	**Rubber feet**	L91524-001
	Screw covers (not illustrated)	L91525-001

Display assembly subcomponents

To identify the display assembly subcomponents, use this illustration and table.

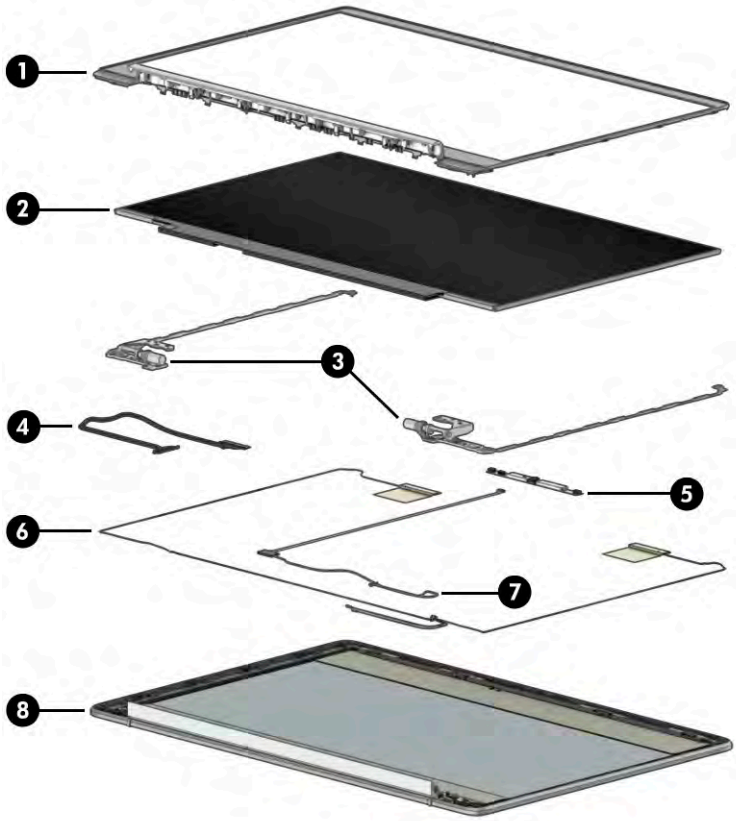

Table 3-2 Display component descriptions and part numbers

Item	Component	Spare part number
(1)	**Display bezel**	
	Ash grey	L91534-001
	Mineral silver	L91535-001
	Pale rose gold	M41237-001
(2)	**Display panel**	
	FHD, antiglare, 250 nits	L91591-001
	FHD, antiglare, touch-on panel (TOP), 250 nits	L91592-001
	HD, antiglare, 220 nits	L91593-001
	HD, BrightView, Touch-on Panel (TOP), 220 nits	L91594-001
	HD, antiglare, 250 nits	M74068-001
	HD, antiglare, Touch-on Panel (TOP), 250 nits	M74069-001
(3)	**Hinges (left and right)** (include display tape)	L91537-001
(4)	**Display cable**	
	Nontouch	L91538-001
	Touch-on panel (TOP)	L91539-001
(5)	**Camera module**	L91540-001

Table 3-2 Display component descriptions and part numbers (continued)

Item	Component	Spare part number
(6)	**Wireless antennas (dual)** (includes display tape)	L91533-001
(7)	**Camera cable**	L91541-001
(8)	**Display back cover** (includes wireless antennas)	
	Forest teal	L91529-001
	Mineral silver	L91530-001
	Ceramic white	L91531-001
	Pale rose gold	M41236-001

Cables

To identify the cables, use this illustration and table.

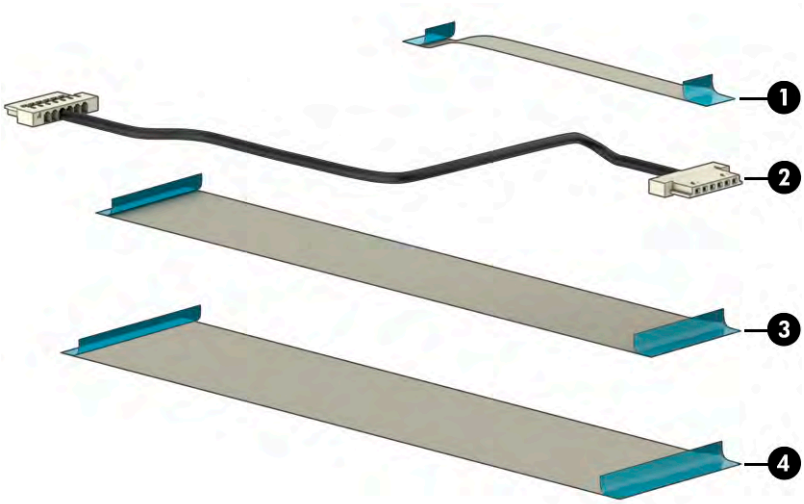

Table 3-3 Cable descriptions and part number

Item	Component	Spare part number
(1)	**Touchpad cable**	L91527-001
(2)	**Power connector cable (DC in)**	L99191-001
(3)	**USB high speed cable**	L73309-001
(4)	**USB low speed cable**	L73310-001

Miscellaneous parts

To identify the miscellaneous parts, use this table.

Table 3-4 Miscellaneous part descriptions and part numbers

Component	Spare part number
AC adapter, USB Type-C (45 W, nPFC, 1.8 m [6.0 ft])	L43407-001
Screw Kit	L91542-001
Screw protective tape	L91525-001
Mouse	
HP X3000 wireless mouse	684978-001
HP Z3700 wireless mouse, glossy white	850859-011
HP Z3700 wireless mouse, natural silver	L74366-201
HP 220 wireless mouse	L13996-001
HP sleeve, black	L67189-001
Power adapter for use in Japan (C5)	226768-001
Duckhead power cord for use in Japan	L33157-001
Power cord (C5, 1.0 m [3.3 ft])	
Australia	L19358-001
Denmark	L19360-001
Europe (Austria, Belgium, Finland, France, Germany, the Netherlands, Norway, and Sweden)	L19361-001
India	L19363-001
Japan	L19365-001
North America	L19367-001
South Korea	L19366-001
Taiwan	L19372-001
The United Kingdom	L19373-001

4 Removal and replacement procedures preliminary requirements

Use this information to properly prepare to disassemble and reassemble the computer.

Tools required

You need the following tools to complete the removal and replacement procedures:

- Tweezers
- Nonconductive, nonmarking pry tool
- Magnetic Phillips P1 screwdriver

Service considerations

The following sections include some of the considerations that you must keep in mind during disassembly and assembly procedures.

NOTE: As you remove each subassembly from the computer, place the subassembly (and all accompanying screws) away from the work area to prevent damage.

Plastic parts

Using excessive force during disassembly and reassembly can damage plastic parts.

Cables and connectors

Handle cables with extreme care to avoid damage.

IMPORTANT: When servicing the computer, be sure that cables are placed in their proper locations during the reassembly process. Improper cable placement can damage the computer.

Apply only the tension required to unseat or seat the cables during removal and insertion. Handle cables by the connector whenever possible. In all cases, avoid bending, twisting, or tearing cables. Be sure that cables are routed so that they cannot be caught or snagged as you remove or replace parts. Handle flex cables with extreme care; these cables tear easily.

Drive handling

Note the following guidelines when handling drives.

IMPORTANT: Drives are fragile components. Handle them with care. To prevent damage to the computer, damage to a drive, or loss of information, observe these precautions:

Before removing or inserting a hard drive, shut down the computer. If you are unsure whether the computer is off or in Hibernation, turn the computer on, and then shut it down through the operating system.

Before handling a drive, be sure that you are discharged of static electricity. While handling a drive, avoid touching the connector.

Before removing an optical drive, be sure that a disc is not in the drive, and be sure that the optical drive tray is closed.

Handle drives on surfaces covered with at least 2.54 cm (1 inch) of shock-proof foam.

Avoid dropping drives from any height onto any surface.

After removing a hard drive or an optical drive, place it in a static-proof bag.

Avoid exposing an internal hard drive to products that have magnetic fields, such as monitors or speakers.

Avoid exposing a drive to temperature extremes or liquids.

If a drive must be mailed, place the drive in a bubble pack mailer or other suitable form of protective packaging, and label the package “FRAGILE.”

Electrostatic discharge information

A sudden discharge of static electricity from your finger or other conductor can destroy static-sensitive devices or microcircuitry. Often the spark is neither felt nor heard, but damage occurs. An electronic device exposed to electrostatic discharge (ESD) might not appear to be affected at all and can work perfectly throughout a normal cycle. The device might function normally for a while, but it has been degraded in the internal layers, reducing its life expectancy.

Networks built into many integrated circuits provide some protection, but in many cases, the discharge contains enough power to alter device parameters or melt silicon junctions.

IMPORTANT: To prevent damage to the device when you remove or install internal components, observe these precautions:

Keep components in their electrostatic-safe containers until you are ready to install them.

Before touching an electronic component, discharge static electricity by using the guidelines described Personal grounding methods and equipment on page 20.

Avoid touching pins, leads, and circuitry. Handle electronic components as little as possible.

If you remove a component, place it in an electrostatic-safe container.

Generating static electricity

Follow these static electricity guidelines.

- Different activities generate different amounts of static electricity.
- Static electricity increases as humidity decreases.

Table 4-1 Static electricity occurrence based on activity and humidity

	Relative humidity		
Event	**55%**	**40%**	**10%**
Walking across carpet	7,500 V	15,000 V	35,000 V

Table 4-1 Static electricity occurrence based on activity and humidity (continued)

	Relative humidity		
Event	**55%**	**40%**	**10%**
Walking across vinyl floor	3,000 V	5,000 V	12,000 V
Motions of bench worker	400 V	800 V	6,000 V
Removing DIPs (dual in-line packages) from plastic tube	400 V	700 V	2,000 V
Removing DIPs from vinyl tray	2,000 V	4,000 V	11,500 V
Removing DIPs from polystyrene foam	3,500 V	5,000 V	14,500 V
Removing bubble pack from PCB (printed circuit board)	7,000 V	20,000 V	26,500 V
Packing PCBs in foam-lined box	5,000 V	11,000 V	21,000 V
Multiple electric components can be packaged together in plastic tubes, trays, or polystyrene foam.			

NOTE: As little as 700 V can degrade a product.

Preventing electrostatic damage to equipment

Many electronic components are sensitive to ESD. Circuitry design and structure determine the degree of sensitivity. The following packaging and grounding precautions are necessary to prevent static electricity damage to electronic components.

- To avoid hand contact, transport products in static-safe containers such as tubes, bags, or boxes.
- Protect all electrostatic parts and assemblies with conductive or approved containers or packaging.
- Keep electrostatic-sensitive parts in their containers until they arrive at static-free stations.
- Place items on a grounded surface before removing them from their container.
- Always be properly grounded when touching a sensitive component or assembly.
- Avoid contact with pins, leads, or circuitry.
- Place reusable electrostatic-sensitive parts from assemblies in protective packaging or conductive foam.

Personal grounding methods and equipment

Using certain equipment can prevent static electricity damage to electronic components.

- **Wrist straps** are flexible straps with a maximum of 1 MΩ ±10% resistance in the ground cords. To provide proper ground, a strap must be worn snug against bare skin. The ground cord must be connected and fit snugly into the banana plug connector on the grounding mat or workstation.
- **Heel straps/Toe straps/Boot straps** can be used at standing workstations and are compatible with most types of shoes or boots. On conductive floors or dissipative floor mats, use them on both feet with a maximum of 1 MΩ ±10% resistance between the operator and ground.

Table 4-2 Static shielding protection levels

Static shielding protection levels	
Method	**Voltage**
Antistatic plastic	1,500
Carbon-loaded plastic	7,500
Metallized laminate	15,000

Grounding the work area

To prevent static damage at the work area, follow these precautions.

- Cover the work surface with approved static-dissipative material.
- Use a wrist strap connected to a properly grounded work surface and use properly grounded tools and equipment.
- Use static-dissipative mats, foot straps, or air ionizers to give added protection.
- Handle electrostatic sensitive components, parts, and assemblies by the case or PCB laminate. Handle them only at static-free work areas.
- Turn off power and input signals before inserting and removing connectors or test equipment.
- Use fixtures made of static-safe materials when fixtures must directly contact dissipative surfaces.
- Keep the work area free of nonconductive materials, such as ordinary plastic assembly aids and polystyrene foam.
- Use conductive field service tools, such as cutters, screwdrivers, and vacuums.
- Avoid contact with pins, leads, or circuitry.

Recommended materials and equipment

HP recommends certain materials and equipment to prevent static electricity.

- Antistatic tape
- Antistatic smocks, aprons, or sleeve protectors
- Conductive bins and other assembly or soldering aids
- Conductive foam
- Conductive tabletop workstations with ground cord of 1 MΩ ±10% resistance
- Static-dissipative table or floor mats with hard tie to ground
- Field service kits
- Static awareness labels
- Wrist straps and footwear straps providing 1 MΩ ±10% resistance
- Material handling packages
- Conductive plastic bags
- Conductive plastic tubes

- Conductive tote boxes
- Opaque shielding bags
- Transparent metallized shielding bags
- Transparent shielding tubes

Cleaning your computer

Cleaning your computer regularly removes dirt and debris so that your device continues to operate at its best. Use the following information to safely clean the external surfaces of your computer.

Enabling HP Easy Clean (select products only)

HP Easy Clean helps you to avoid accidental input while you clean the computer surfaces. This software disables devices such as the keyboard, touch screen, and touchpad for a preset amount of time so that you can clean all computer surfaces.

1. Start HP Easy Clean in one of the following ways:
   - Select the **Start** menu, and then select **HP Easy Clean**.

     – or –
   - Select the **HP Easy Clean** icon in the taskbar.

     – or –
   - Select **Start**, and then select the **HP Easy Clean** tile.
2. Now that your device is disabled for a short period, see Removing dirt and debris from your computer on page 22 for the recommended steps to clean the high-touch, external surfaces on your computer. After you remove the dirt and debris, you can also clean the surfaces with a disinfectant. See Cleaning your computer with a disinfectant on page 23 for guidelines to help prevent the spread of harmful bacteria and viruses.

Removing dirt and debris from your computer

Here are the recommended steps to clean dirt and debris from your computer.

For computers with wood veneer, see Caring for wood veneer (select products only) on page 24.

1. Wear disposable gloves made of latex (or nitrile gloves, if you are latex-sensitive) when cleaning the surfaces.
2. Turn off your device and unplug the power cord and other connected external devices. Remove any installed batteries from items such as wireless keyboards.

   CAUTION: To prevent electric shock or damage to components, never clean a product while it is turned on or plugged in.
3. Moisten a microfiber cloth with water. The cloth should be moist, but not dripping wet.

   IMPORTANT: To avoid damaging the surface, avoid abrasive cloths, towels, and paper towels.
4. Wipe the exterior of the product gently with the moistened cloth.

IMPORTANT: Keep liquids away from the product. Avoid getting moisture in any openings. If liquid makes its way inside your HP product, it can cause damage to the product. Do not spray liquids directly on the product. Do not use aerosol sprays, solvents, abrasives, or cleaners containing hydrogen peroxide or bleach that might damage the finish.

5. Start with the display (if applicable). Wipe carefully in one direction, and move from the top of the display to the bottom. Finish with any flexible cables, like power cord, keyboard cable, and USB cables.
6. Be sure that surfaces have completely air-dried before turning the device on after cleaning.
7. Discard the gloves after each cleaning. Clean your hands immediately after you remove the gloves.

See Cleaning your computer with a disinfectant on page 23 for recommended steps to clean the high-touch, external surfaces on your computer to help prevent the spread of harmful bacteria and viruses.

Cleaning your computer with a disinfectant

The World Health Organization (WHO) recommends cleaning surfaces, followed by disinfection, as a best practice for preventing the spread of viral respiratory illnesses and harmful bacteria.

After cleaning the external surfaces of your computer using the steps in Removing dirt and debris from your computer on page 22, Caring for wood veneer (select products only) on page 24, or both, you might also choose to clean the surfaces with a disinfectant. A disinfectant that is within HP's cleaning guidelines is an alcohol solution consisting of 70% isopropyl alcohol and 30% water. This solution is also known as rubbing alcohol and is sold in most stores.

Follow these steps when disinfecting high-touch, external surfaces on your computer:

1. Wear disposable gloves made of latex (or nitrile gloves, if you are latex-sensitive) when cleaning the surfaces.
2. Turn off your device and unplug the power cord and other connected external devices. Remove any installed batteries from items such as wireless keyboards.

CAUTION: To prevent electric shock or damage to components, never clean a product while it is turned on or plugged in.

3. Moisten a microfiber cloth with a mixture of 70% isopropyl alcohol and 30% water. The cloth should be moist, but not dripping wet.

CAUTION: Do not use any of the following chemicals or any solutions that contain them, including spray-based surface cleaners: bleach, peroxides (including hydrogen peroxide), acetone, ammonia, ethyl alcohol, methylene chloride, or any petroleum-based materials, such as gasoline, paint thinner, benzene, or toluene.

IMPORTANT: To avoid damaging the surface, avoid abrasive cloths, towels, and paper towels.

4. Wipe the exterior of the product gently with the moistened cloth.

IMPORTANT: Keep liquids away from the product. Avoid getting moisture in any openings. If liquid makes its way inside your HP product, it can cause damage to the product. Do not spray liquids directly on the product. Do not use aerosol sprays, solvents, abrasives, or cleaners containing hydrogen peroxide or bleach that might damage the finish.

5. Start with the display (if applicable). Wipe carefully in one direction, and move from the top of the display to the bottom. Finish with any flexible cables, like power cord, keyboard cable, and USB cables.
6. Be sure that surfaces have completely air-dried before turning the device on after cleaning.
7. Discard the gloves after each cleaning. Clean your hands immediately after you remove the gloves.

Caring for wood veneer (select products only)

Your product might feature high-quality wood veneer. As with all natural wood products, proper care is important for best results over the life of the product. Because of the nature of natural wood, you might see unique variations in the grain pattern or subtle variations in color, which are normal.

- Clean the wood with a dry, static-free microfiber cloth or chamois.
- Avoid cleaning products containing substances such as ammonia, methylene chloride, acetone, turpentine, or other petroleum-based solvents.
- Do not expose the wood to sun or moisture for long periods of time.
- If the wood becomes wet, dry it by dabbing with an absorbent, lint-free cloth.
- Avoid contact with any substance that might dye or discolor the wood.
- Avoid contact with sharp objects or rough surfaces that might scratch the wood.

See Removing dirt and debris from your computer on page 22 for the recommended steps to clean the high-touch, external surfaces on your computer. After you remove the dirt and debris, you can also clean the surfaces with a disinfectant. See Cleaning your computer with a disinfectant on page 23 for sanitizing guidelines to help prevent the spread of harmful bacteria and viruses.

Packaging and transporting guidelines

Follow these grounding guidelines when packaging and transporting equipment.

- To avoid hand contact, transport products in static-safe tubes, bags, or boxes.
- Protect ESD-sensitive parts and assemblies with conductive or approved containers or packaging.
- Keep ESD-sensitive parts in their containers until the parts arrive at static-free workstations.
- Place items on a grounded surface before removing items from their containers.
- Always be properly grounded when touching a component or assembly.
- Store reusable ESD-sensitive parts from assemblies in protective packaging or nonconductive foam.
- Use transporters and conveyors made of antistatic belts and roller bushings. Be sure that mechanized equipment used for moving materials is wired to ground and that proper materials are selected to avoid static charging. When grounding is not possible, use an ionizer to dissipate electric charges.

Accessing support information

Use this information to find the HP support that you need.

Table 4-3 Support information locations

Service consideration	Path to access information
Records of reported failure incidents stored on the computer	**Windows:** Pre-operating system failures are logged in the BIOS Event Log. To view the BIOS Event Log: 1. Press the power button. 2. Immediately and repeatedly press esc when the power button light turns white.

Table 4-3 Support information locations (continued)

Service consideration	Path to access information
	NOTE: If you do not press esc at the appropriate time, you must restart the computer and again repeatedly press esc when the power button light turns white to access the utility. 3. Press f10 to enter the BIOS setup. 4. (On commercial products) Under the **Main** tab, select **BIOS event log**, and then select **View BIOS Event Log**. - or - (On consumer products) Under the **Main** tab, select **System Log**. Post operating system failures are logged in the Event Viewer. 1. Turn on the computer and allow the operating system to open. 2. Click the search icon in the taskbar. 3. Type `Event Viewer`, and then press enter. 4. Select the log from the left panel. Details display in the right panel. **Chrome:** 1. Go to support.google.com/chrome. 2. Search `collect Chrome device logs`.
Technical bulletins	To locate technical bulletins: 1. Go to www.hp.com. 2. Place the cursor over **Problem solving** to display more options. 3. Select **Support & Troubleshooting**. 4. Type the serial number, product number, or product name to go to the product support page. 5. Select **Advisories** to view technical bulletins.
Repair professionals	To locate repair professionals: 1. Go to www.hp.com. 2. Place the cursor over **Support resources** to display more options. 3. Select **Authorized service providers**.
Component and diagnosis information, failure detection, and required action	To locate diagnosis information and actions: 1. Go to http://www.hp.com/go/techcenter/pcdiags. 2. Select **Get Support**. 3. Near the bottom of the window, select **Notebook PCs**, and then select your location.

5 Removal and replacement procedures for authorized service provider parts

This chapter provides removal and replacement procedures for authorized service provider parts.

IMPORTANT: Components described in this chapter should be accessed only by an authorized service provider. Accessing these parts can damage the computer or void the warranty.

NOTE: Details about your computer, including model, serial number, product key, and length of warranty, are on the service tag at the bottom of your computer.

Component replacement procedures

To remove and replace computer components, use these procedures.

NOTE: HP continually improves and changes product parts. For complete and current information about supported parts for your computer, go to http://partsurfer.hp.com, select your country or region, and then follow the on-screen instructions.

You must remove, replace, or loosen as many as 46 screws when you service the parts described in this chapter. Make special note of each screw size and location during removal and replacement.

Preparation for disassembly

To remove and replace computer components, use these procedures.

See Removal and replacement procedures preliminary requirements on page 18 for initial safety procedures.

1. Turn off the computer. If you are unsure whether the computer is off or in Hibernation, turn the computer on, and then shut it down through the operating system.
2. Disconnect the power from the computer by unplugging the power cord from the computer.
3. Disconnect all external devices from the computer.

Bottom cover

To remove the bottom cover, use this procedure and illustration.

Table 5-1 Bottom cover description and part number

Description	Spare part number
Bottom cover	L91523-001
Rubber feet	L91524-001
Screw covers	L91525-001

Before removing the bottom cover, prepare the computer for disassembly (Preparation for disassembly on page 26).

Remove the bottom cover:

1. Peel the two rubber strips **(1)** and remove the two screw covers **(2)** from the bottom cover.
2. Remove the eight Phillips M2.0 × 5.0 screws **(3)** from the bottom of the computer.

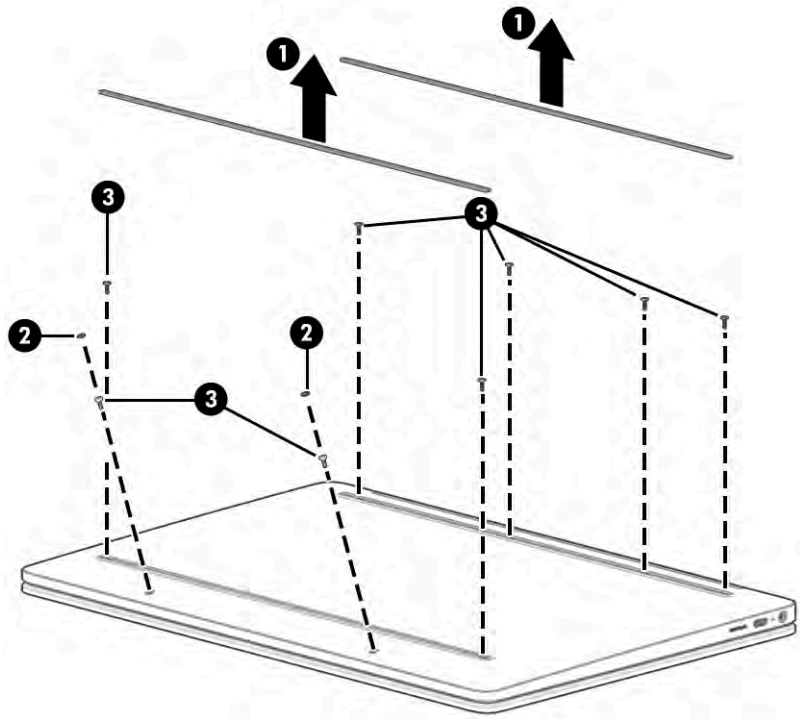

3. Starting near the hinge, use a tool and work around the edges to release the bottom cover from the computer **(1)**.
4. Remove the bottom cover from the computer **(2)**.

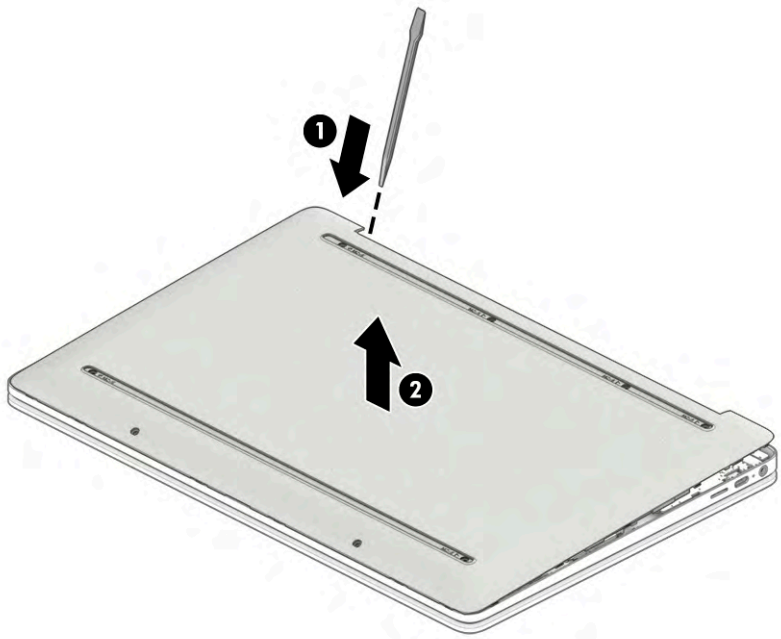

To replace the bottom cover, reverse the removal procedures.

Battery

To remove the battery, use this procedure and illustration.

Table 5-2 Battery description and part number

Description	Spare part number
Battery (2 cell, 47 Whr)	L75783-005

WARNING! To avoid personal injury and damage to the product:

- Do *not* puncture, twist, or crack the battery.
- Do *not* cause an external puncture or rupture to the battery. They can cause a short inside the battery, which can result in battery thermal runaway.
- Do *not* handle or touch the battery enclosure with sharp objects such as tweezers or pliers, which might puncture the battery.
- Do *not* compress or squeeze the battery case with tools or heavy objects stacked on top of the case. These actions can apply undue force on the battery.
- Do *not* touch the connectors with any metallic surface or object, such as metal tools, screws, or coins, which can cause shorting across the connectors.

Before removing the battery, follow these steps:

1. Prepare the computer for disassembly (see Preparation for disassembly on page 26).
2. Remove the bottom cover (see Bottom cover on page 26).

WARNING! To reduce potential safety issues, use only the user-replaceable battery provided with the computer, a replacement battery provided by HP, or a compatible battery purchased from HP.

IMPORTANT: Removing a battery that is the sole power source for the computer can cause loss of information. To prevent loss of information, save your work or shut down the computer through Windows before you remove the battery.

Remove the battery:

1. Lift the tape off the system board connector **(1)**, and then disconnect the battery cable from the system board **(2)**.
2. Remove the speaker cable from the clips along the bottom of the battery **(3)**.
3. Remove the four Phillips M2.0 × 3.5 screws **(4)** that secure the battery to the computer.

4. Remove the battery from the computer **(5)**.

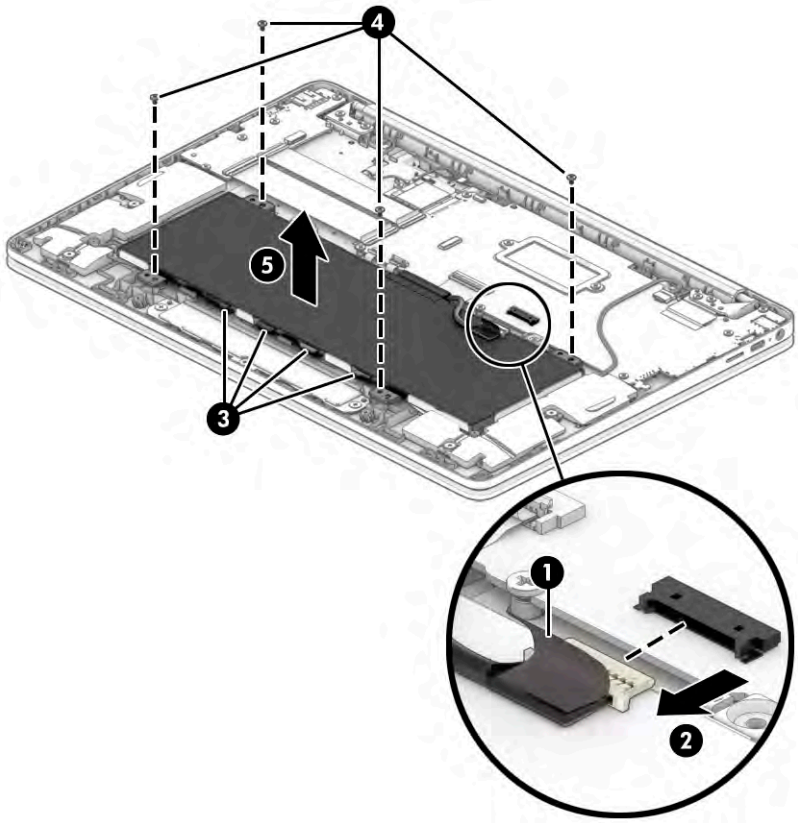

To replace the battery, reverse the removal procedures.

WLAN module

To remove the WLAN module, use this procedure and illustration.

Table 5-3 WLAN module descriptions and part numbers

Description	Spare part number
Realtek RTL8822CE 802.11b/g/n/a/ac (2 × 2) MU-MIMO supported and Bluetooth 5.0	L44796-005
Intel Wi-Fi 6 AX201-W + Bluetooth 5 (non-vPro)	L92724-005

IMPORTANT: To prevent an unresponsive system, replace the wireless module only with a wireless module authorized for use in the computer by the governmental agency that regulates wireless devices in your country or region. If you replace the module and then receive a warning message, remove the module to restore device functionality, and then contact technical support.

Before removing the WLAN module, follow these steps:

1. Prepare the computer for disassembly (see Preparation for disassembly on page 26).
2. Remove the bottom cover (see Bottom cover on page 26).
3. Disconnect the battery cable from the system board (see Battery on page 28).

Remove the WLAN module:

1. Carefully disconnect the antenna cables from the module **(1)**.

NOTE: The #1 white WLAN antenna cable connects to the WLAN module #1 Main terminal. The #2 black WLAN antenna cable connects to the WLAN module #1 Aux terminal.

2. Remove the Phillips M2.0 × 2.5 screw **(2)**.
3. Remove the WLAN module from the socket **(3)**.

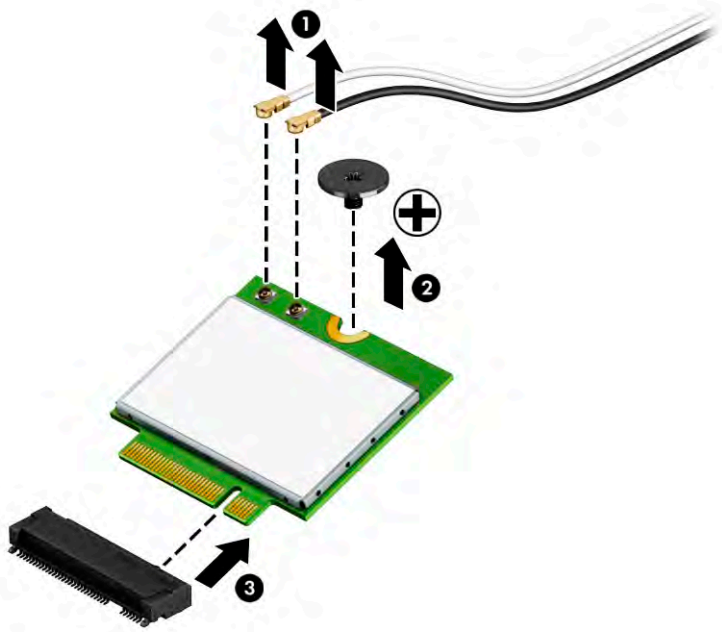

4. If the WLAN antenna is not connected to the terminal on the WLAN module, install a protective sleeve on the antenna connector, as shown in the following illustration.

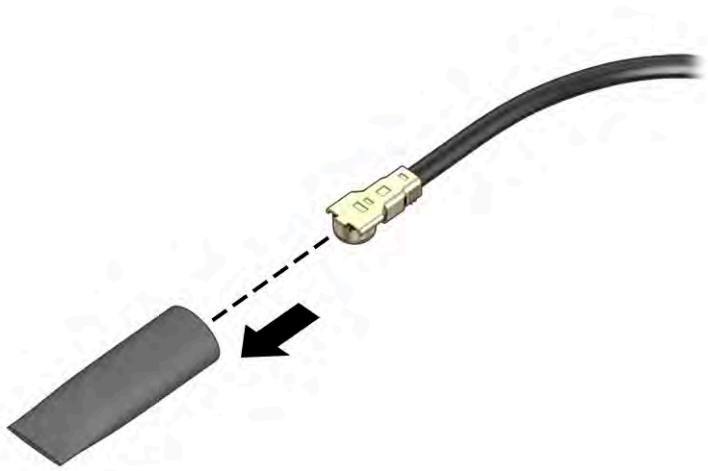

Reverse this procedure to install the WLAN module.

Speakers

To remove the speakers, use this procedure and illustration.

Table 5-4 Speaker description and part number

Description	Spare part number
Speaker Kit	L91528-001

Before removing the speakers, follow these steps:

1. Prepare the computer for disassembly (see Preparation for disassembly on page 26).
2. Remove the bottom cover (see Bottom cover on page 26).
3. Remove the battery (see Battery on page 28).

Remove the speakers:

1. Disconnect the speaker cable from the system board **(1)**.
2. Remove the two Phillips M2.0 × 4.8 screws **(2)** that secure each speaker to the computer.
3. Remove the speakers from the computer **(3)** while removing the cable from the routing along the bottom of the battery.

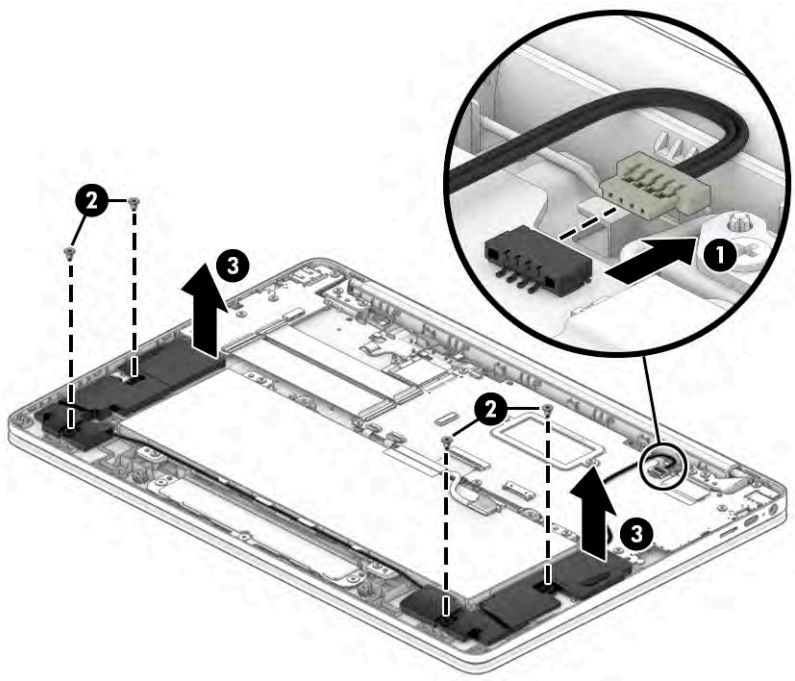

Reverse this procedure to install the speakers.

Touchpad

To remove the touchpad, use this procedure and illustration.

Table 5-5 Touchpad description and part number

Description	Spare part number
Touchpad for use in models with Celeron N4000/N4020 or Pentium Silver N5030 processors	L91526-001
Touchpad for use in models with Pentium Silver N6000 or Celeron N4500 processors	M74070-001
Touchpad cable	L91527-001

Before removing the touchpad, follow these steps:

1. Prepare the computer for disassembly (see Preparation for disassembly on page 26).
2. Remove the bottom cover (see Bottom cover on page 26).
3. Remove the battery (see Battery on page 28).

Remove the touchpad:

1. Remove the three Phillips M2.0 × 2.0 screws **(1)** that secure the touchpad bracket to the computer.
2. Remove the bracket from the computer **(2)**.

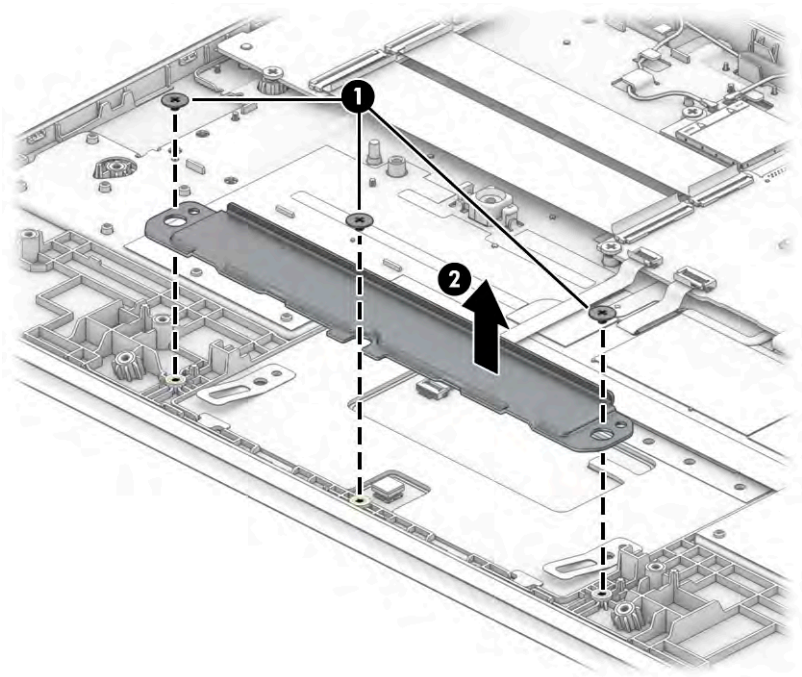

3. Disconnect the cable from the ZIF connector on the touchpad **(1)**.
4. Remove the protective shielding from the top of the touchpad to expose the screws **(2)**.
5. Remove the three broadhead Phillips M2.0 × 2.0 screws **(3)** that secure the touchpad to the computer.

6. Remove the touchpad from the computer **(4)**.

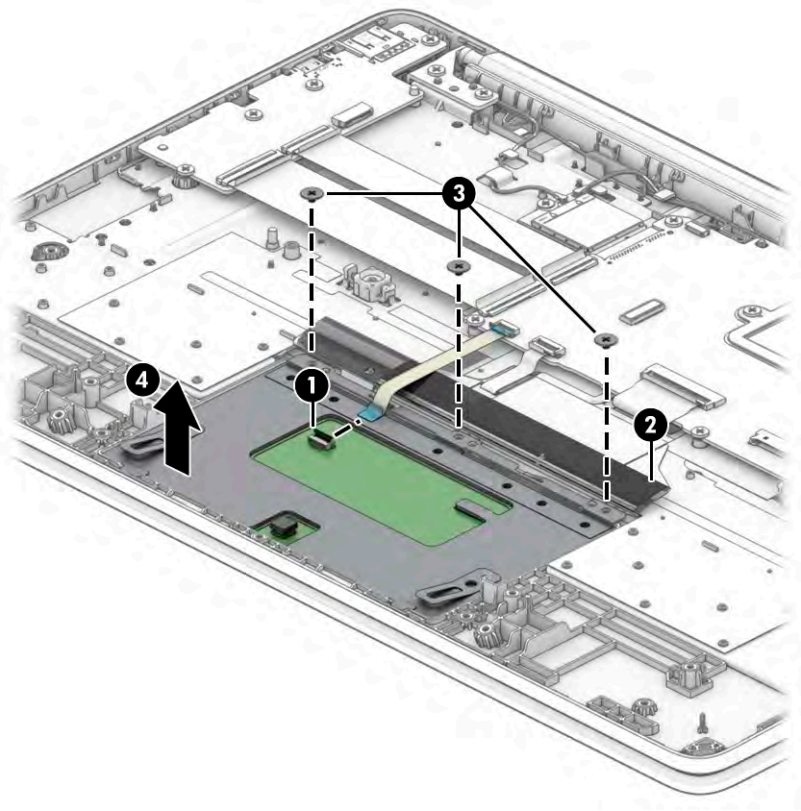

Reverse this procedure to install the touchpad.

USB board

To remove the USB board, use this procedure and illustration.

Table 5-6 USB board description and part number

Description	Spare part number
USB board for use in models with Celeron N4000/N4020 or Pentium Silver N5030 processors	L91522-001
USB board for use in models with Pentium Silver N6000 or Celeron N4500 processors	M74071-001
USB board cable, high speed	L73309-001
USB board cable, low speed	L73310-001

Before removing the USB board, follow these steps:

1. Prepare the computer for disassembly (see Preparation for disassembly on page 26).
2. Remove the bottom cover (see Bottom cover on page 26).
3. Disconnect the battery cable from the system board (see Battery on page 28).

Remove the USB board:

1. Disconnect the top cable from the USB board **(1)**.
2. Disconnect the two flat ribbon cables from the two reverse ZIF connectors on the USB board **(2)**.
3. Remove the four Phillips M2.0 × 3.5 screws **(3)** that secure the board to the computer.
4. Remove the board from the computer **(4)**.

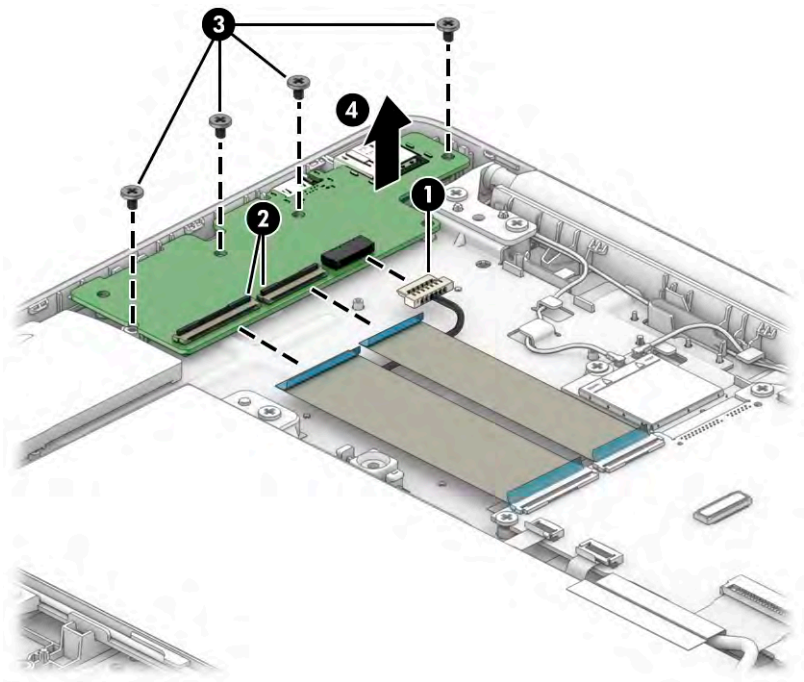

Reverse this procedure to install the USB board.

System board

To remove the system board, use these procedures and illustrations.

Table 5-7 System board descriptions and part numbers

Description	Spare part number
Intel Pentium Silver N6000 processor, 8 GB system memory, and 128 GB eMMC memory	M74067-001
Intel Pentium Silver N6000 processor, 4 GB system memory, and 64 GB eMMC memory	M74066-001
Intel Pentium Silver N5030 processor, 8 GB system memory, and 128 GB eMMC memory	L91521-001
Intel Pentium Silver N5030 processor, 8 GB system memory, and 128 GB eMMC memory, models with a backlit keyboard	M21214-001
Intel Pentium Silver N5030 processor, 8 GB system memory, and 128 GB eMMC memory, models with a backlit keyboard, no card reader	M75856-001
Intel Pentium Silver N5030 processor, 8 GB system memory, and 128 GB eMMC memory, no card reader	M81923-001
Intel Pentium Silver N5030 processor, 4 GB system memory, and 64 GB eMMC memory	L91520-001
Intel Pentium Silver N5030 processor, 4 GB system memory, and 64 GB eMMC memory, models with a backlit keyboard	M21213-001
Intel Pentium Silver N5030 processor, 4 GB system memory, and 64 GB eMMC memory, no card reader	M75852-001

Table 5-7 System board descriptions and part numbers (continued)

Description	Spare part number
Intel Pentium Silver N5030 processor, 4 GB system memory, and 64 GB eMMC memory, models with a backlit keyboard, no card reader	M75855-001
Intel Pentium Silver N5000 processor, 8 GB system memory, and 128 GB eMMC memory	M03106-001
Intel Pentium Silver N5000 processor, 8 GB system memory, and 128 GB eMMC memory, models with a backlit keyboard	M03111-001
Intel Pentium Silver N5000 processor, 4 GB system memory, and 64 GB eMMC memory	M00111-001
Intel Pentium Silver N5000 processor, 4 GB system memory, and 64 GB eMMC memory, models with a backlit keyboard	M03109-001
Intel Celeron N4500 processor, 8 GB system memory, and 128 GB eMMC memory	M74065-001
Intel Celeron N4500 processor, 4 GB system memory, and 64 GB eMMC memory	M74064-001
Intel Celeron N4500 processor, 4 GB system memory, and 32 GB eMMC memory	M74063-001
Intel Celeron N4020 processor, 8 GB system memory, and 128 GB eMMC memory	L91519-001
Intel Celeron N4020 processor, 8 GB system memory, and 128 GB eMMC memory, no card reader	M81922-001
Intel Celeron N4020 processor, 4 GB system memory, and 128 GB eMMC memory, models with a backlit keyboard	M21212-001
Intel Celeron N4020 processor, 4 GB system memory, and 128 GB eMMC memory, models with a backlit keyboard, no card reader	M75854-001
Intel Celeron N4020 processor, 4 GB system memory, and 64 GB eMMC memory	L91518-001
Intel Celeron N4020 processor, 4 GB system memory, and 64 GB eMMC memory, models with a backlit keyboard	M21211-001
Intel Celeron N4020 processor, 4 GB system memory, and 64 GB eMMC memory, models with a backlit keyboard, no card reader	M81924-001
Intel Celeron N4020 processor, 4 GB system memory, and 64 GB eMMC memory, no card reader	M75851-001
Intel Celeron N4020 processor, 4 GB system memory, and 32 GB eMMC memory	L91517-001
Intel Celeron N4020 processor, 4 GB system memory, and 32 GB eMMC memory, models with a backlit keyboard	M21210-001
Intel Celeron N4020 processor, 4 GB system memory, and 32 GB eMMC memory, models with a backlit keyboard, no card reader	M75853-001
Intel Celeron N4020 processor, 4 GB system memory, and 32 GB eMMC memory, no card reader	M75850-001
Intel Celeron N4000 processor, 8 GB system memory, and 128 GB eMMC memory	M03105-001
Intel Celeron N4000 processor, 8 GB system memory, and 128 GB eMMC memory, models with a backlit keyboard	M03110-001
Intel Celeron N4000 processor, 4 GB system memory, and 128 GB eMMC memory, models with a backlit keyboard	M07242-001
Intel Celeron N4000 processor, 4 GB system memory, and 64 GB eMMC memory	M00110-001
Intel Celeron N4000 processor, 4 GB system memory, and 64 GB eMMC memory, models with a backlit keyboard	M03108-001
Intel Celeron N4000 processor, 4 GB system memory, and 32 GB eMMC memory	M00109-001

Table 5-7 System board descriptions and part numbers (continued)

Description	Spare part number
Intel Celeron N4000 processor, 4 GB system memory, and 32 GB eMMC memory, models with a backlit keyboard	M03107-001
Thermal pad, system board	L76600-001

Before removing the system board, follow these steps:

1. Prepare the computer for disassembly (see Preparation for disassembly on page 26).
2. Remove the bottom cover (see Bottom cover on page 26).
3. Remove the battery (see Battery on page 28).

Remove the system board:

1. Disconnect the following cables from the system board:
   - USB board cable from USB board **(1)**
   - Camera cable **(2)**
   - Speaker cable **(3)**
   - Display cable **(4)**
   - Keyboard backlight cable (ZIF) **(5)**
   - Keyboard cable (ZIF) **(6)**
   - Touchpad cable (ZIF) **(7)**
   - USB board cable (ZIF) **(8)**
   - USB board cable (ZIF) **(9)**

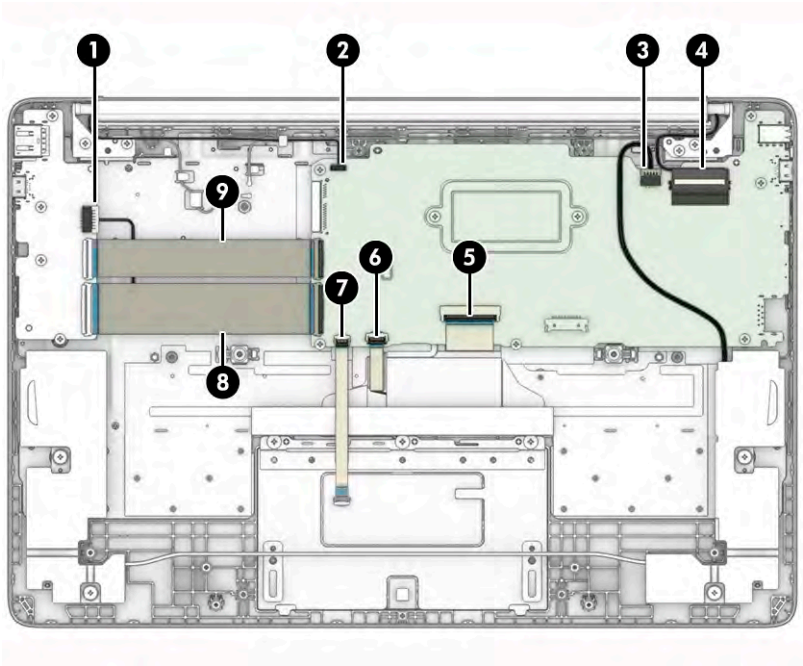

2. Remove the six Phillips M2.0 × 3.5 screws **(1)** that secure the system board to the computer.
3. Lift the side of the system board **(2)**, and then pull the system board to the left to remove it from the computer **(3)**.

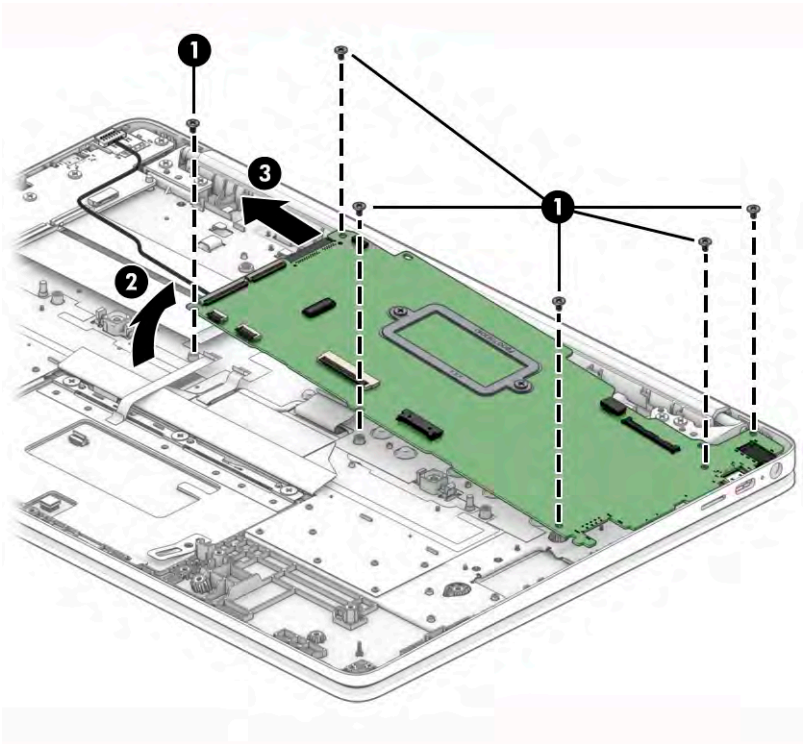

4. When installing a system board, make sure the thermal pad is installed as shown in the following illustration.

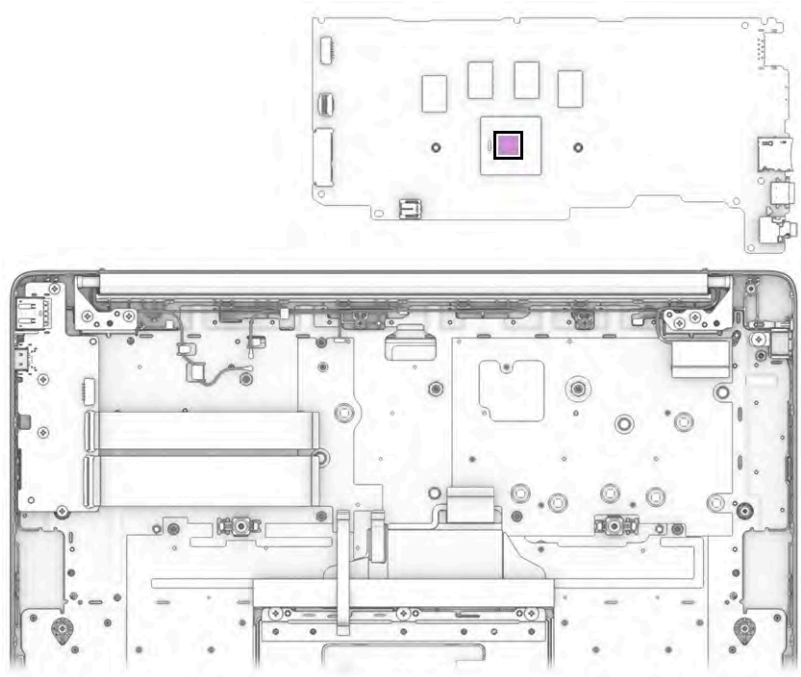

Reverse this procedure to install the system board.

Power connector (DC in) cable

To remove the power connector cable, use these procedures and illustrations.

Table 5-8 Power connector cable descriptions and part numbers

Description	Spare part number
Power connector cable	L99191-001

Before removing the power connector cable, follow these steps:

1. Prepare the computer for disassembly (see Preparation for disassembly on page 26).
2. Remove the bottom cover (see Bottom cover on page 26).
3. Remove the battery (see Battery on page 28).
4. Remove the system board (see System board on page 34).

Remove the power connector cable:

▲ Disconnect the power connector cable from the system board.

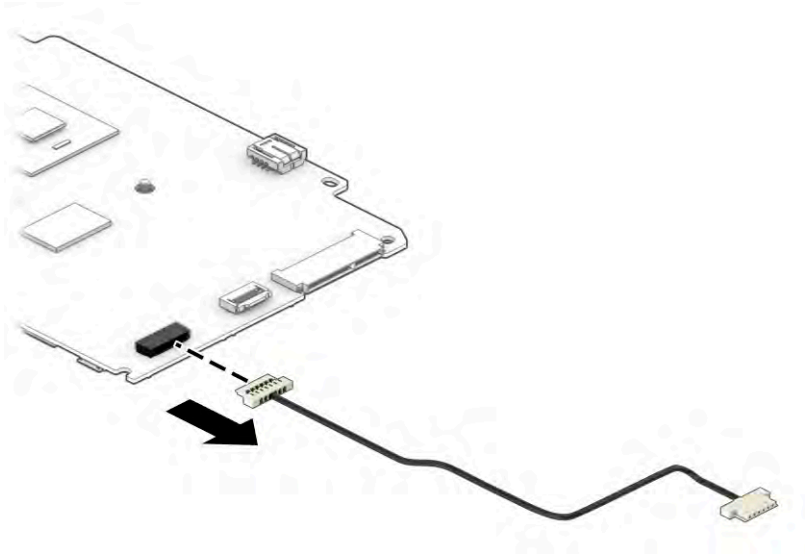

Reverse this procedure to install the power connector cable.

Display assembly

To remove and disassemble the display assembly, use these procedures and illustrations.

NOTE: Display assemblies are offered as spare parts only at the subcomponent level.

Before removing the display panel, follow these steps:

1. Prepare the computer for disassembly (see Preparation for disassembly on page 26).
2. Remove the bottom cover (see Bottom cover on page 26).
3. Disconnect the battery cable from the system board (see Battery on page 28).

Remove the display assembly:

1. Disconnect the antenna cables from the WLAN module **(1)**, and then remove the cables from the clips **(2)**.

   NOTE: One antenna cable routes through each hinge.

2. Disconnect the display cable **(3)** and the camera cable **(4)** from the system board.

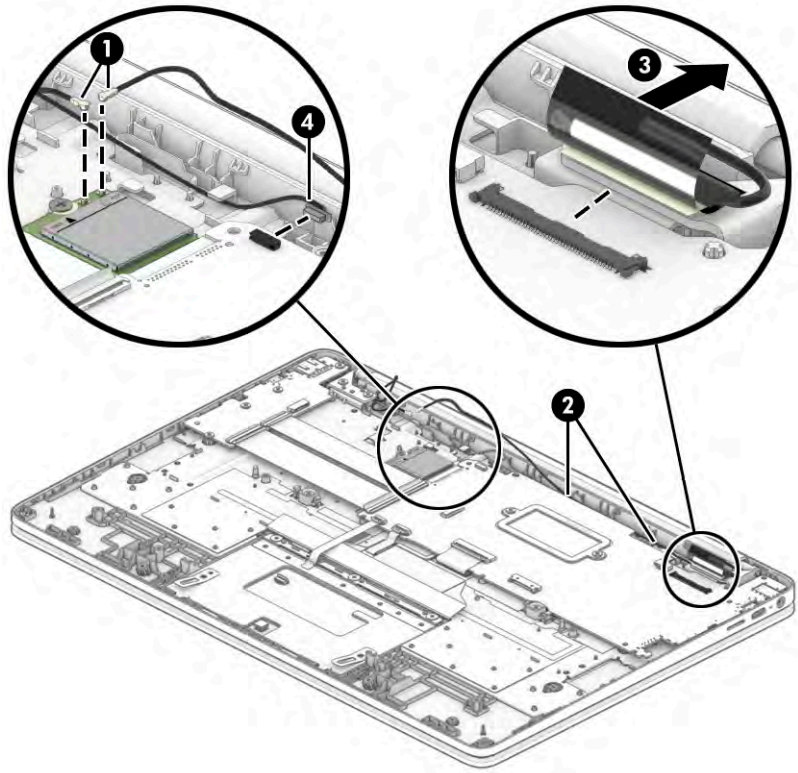

3. Open the display until the hinges are in the open position **(1)**.
4. Remove the four Phillips M2.5 × 5.5 screws **(2)** from the hinges.
5. Separate the display from the computer **(3)**.

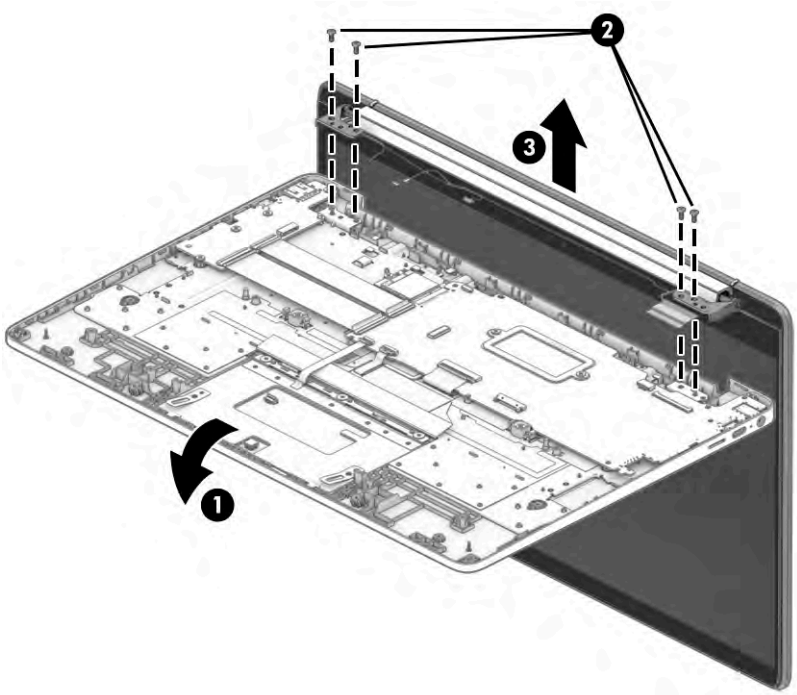

6. If you need to remove the bezel:

   a. Flex the top **(1)**, the left and right sides **(2)**, and then the bottom of the bezel **(3)** to release it.

   b. Remove the bezel from the display **(4)**.

   The bezel is available as the following spare part numbers:

   L91534-001: Ash grey

   L91535-001: Mineral silver

   M41237-001: Pale rose gold

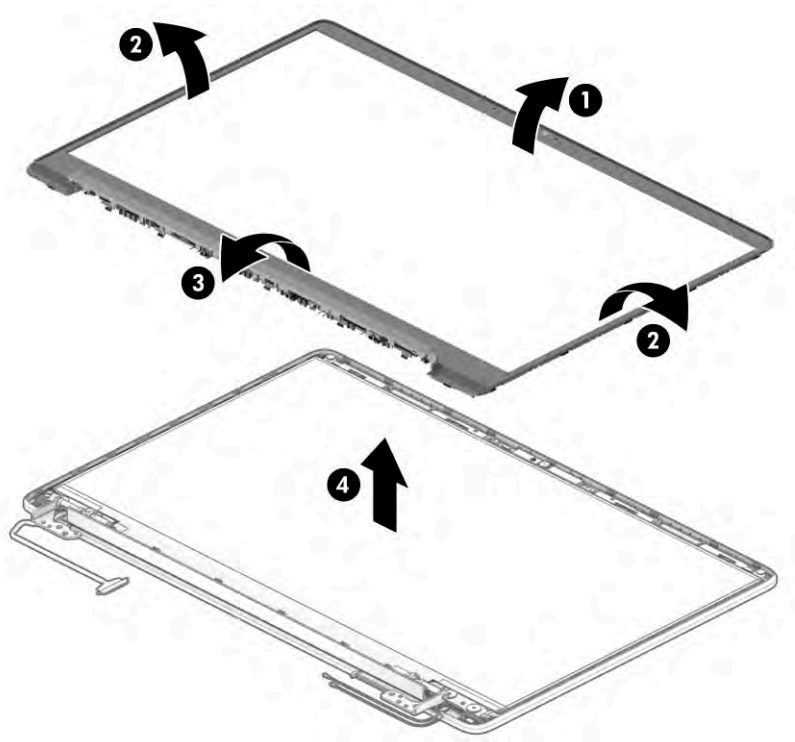

7. If you need to remove the display panel:

   a. Tape behind the left and right sides of the display panel secures the panel to the display. Use tweezers to grasp the tape, and then roll the tape around the tweezers **(1)** as you pull the tape from behind the panel **(2)**. Use the same procedure to remove both pieces of tape. You have to pull on the tape multiple times before it is completely removed.

   TIP: Rolling the tape around the tweezers or the shaft of a screwdriver as you pull it can help to avoid pulling too hard and tearing the tape. To avoid tearing the tape, pull the tape evenly and carefully.

b. Rotate the display panel over and place it next to the display rear cover **(3)**.

Display panels are available as the following spare part numbers:

L91591-001: FHD, antiglare, 250 nits

L91592-001: FHD, antiglare, Touch-on Panel (TOP), 250 nits

L91593-001: HD, antiglare, 220 nits

L91594-001: HD, BrightView, Touch-on Panel (TOP), 220 nits

M74068-001: HD. antiglare, 250 nits

M74069-001: HD. antiglare, Touch-on Panel (TOP), 250 nits

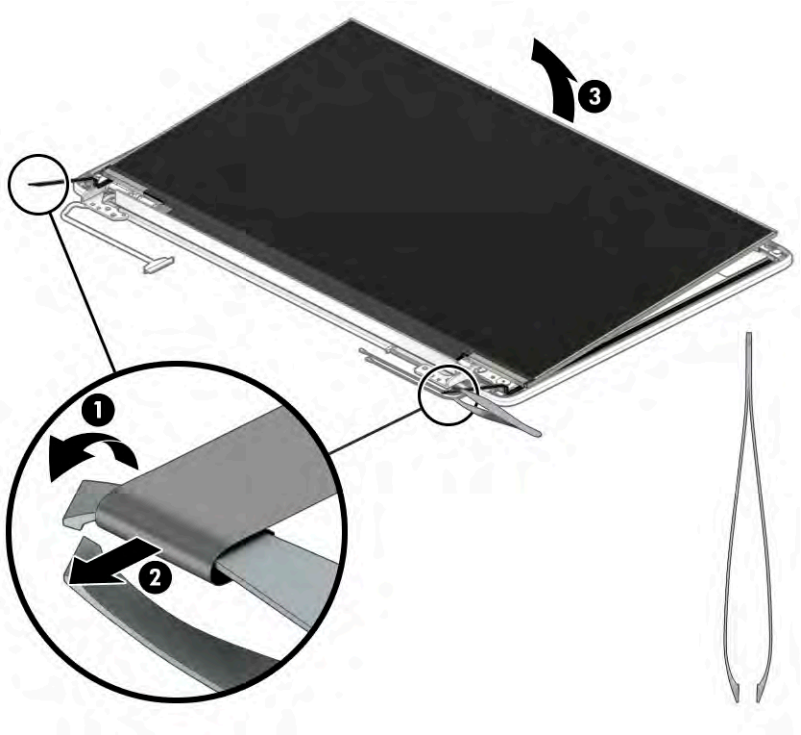

c. Lift the tape from the connector on the back of the display panel **(1)**, and then disconnect the cable from the panel **(2)**.

The display cable is available as spare part number L91539-001 for touch models and L91538-001 for nontouch models.

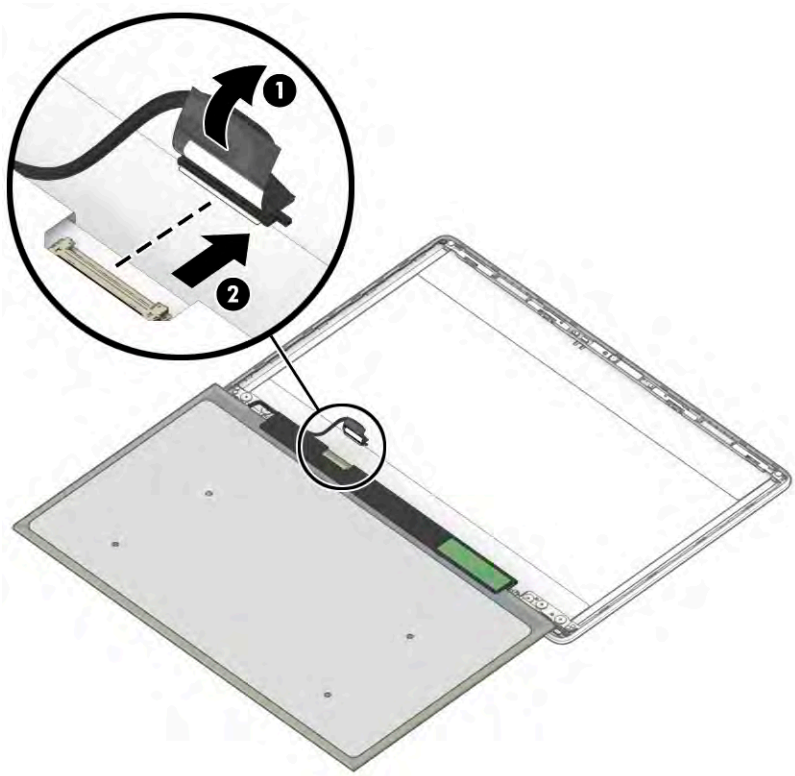

8. If you need to remove the camera module:

a. Use a flat tool to lift up evenly across the camera module to remove it from the display rear cover **(1)**.

b. Disconnect the cable from the camera module **(2)**.

The camera module is available as spare part number L91540-001.

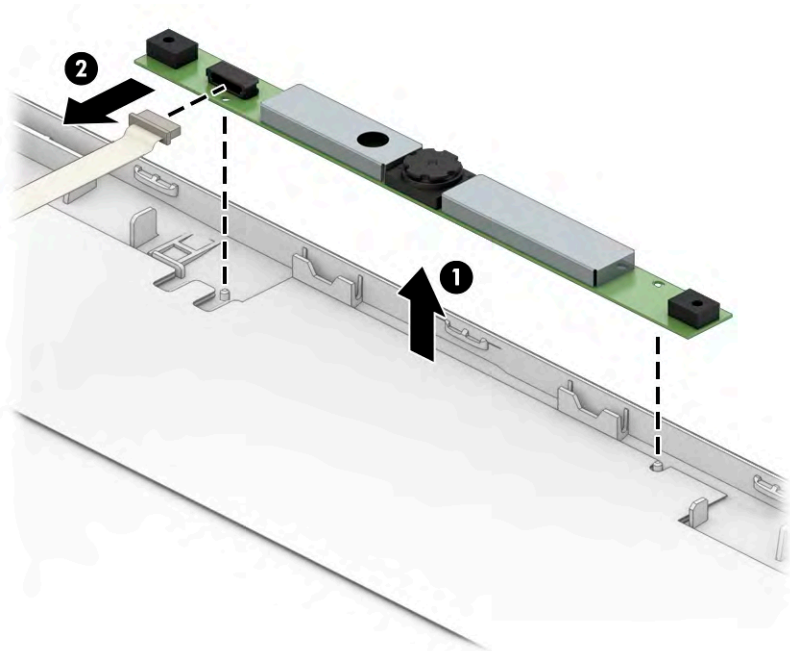

9. If you need to remove the display hinges:

a. Remove the Phillips M2.0 × 2.5 screw **(1)** from the top of each hinge bracket.

b. Remove the three Phillips M2.5 × 2.5 screws **(2)** from the bottom of each hinge.

c. Remove the hinges from the display rear cover **(3)**.

The display hinges are available as spare part number L91537-001.

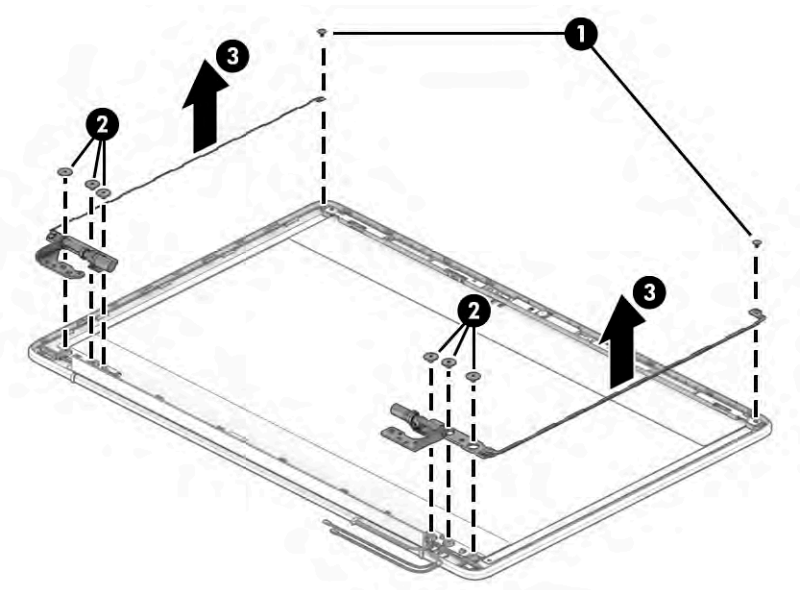

d. You must remove the display bracket to remove the wireless antennas. To remove the bracket, lift it straight up and off the display rear cover.

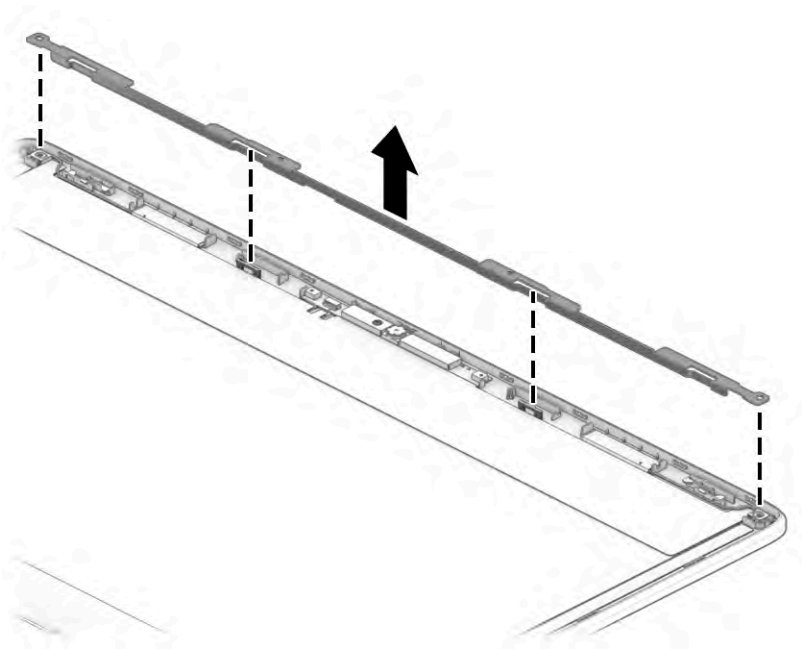

e. For removal and reinstallation, note the display cable routing around the left hinge.

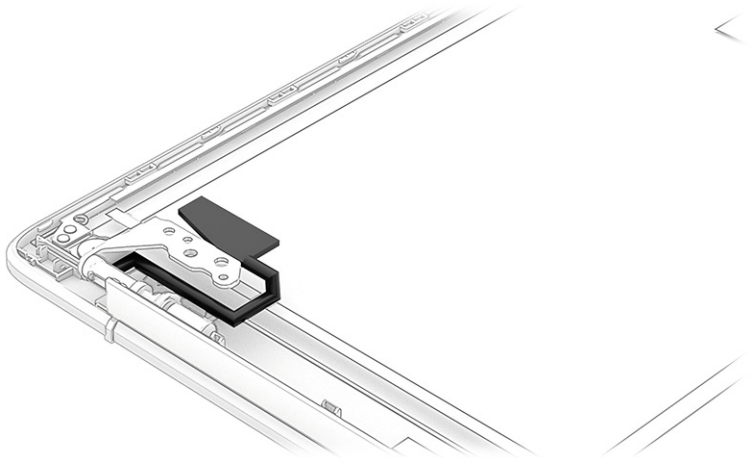

f. For removal and reinstallation, note the antenna cable routing around the right hinge.

10. If you need to remove the camera cable, remove the cable from the routing along the bottom of the display rear cover **(1)**, and then peel the camera cable off the cover **(2)**. The cable is secured with adhesive.

The camera cable is available as spare part number L91541-001.

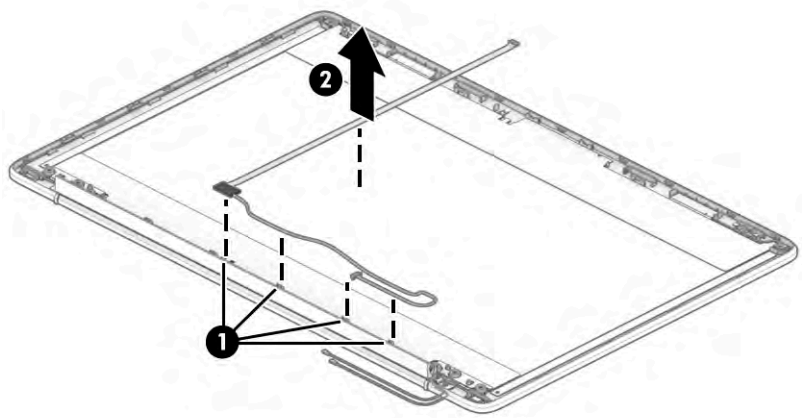

11. If you need to remove the wireless antennas, peel the antennas off the display rear cover **(1)**, remove the antenna cables from the routing clips along the bottom and sides of the cover **(2)**, and then remove the antennas and cables **(3)**.

    The antennas and cables are available as spare part number L91533-001.

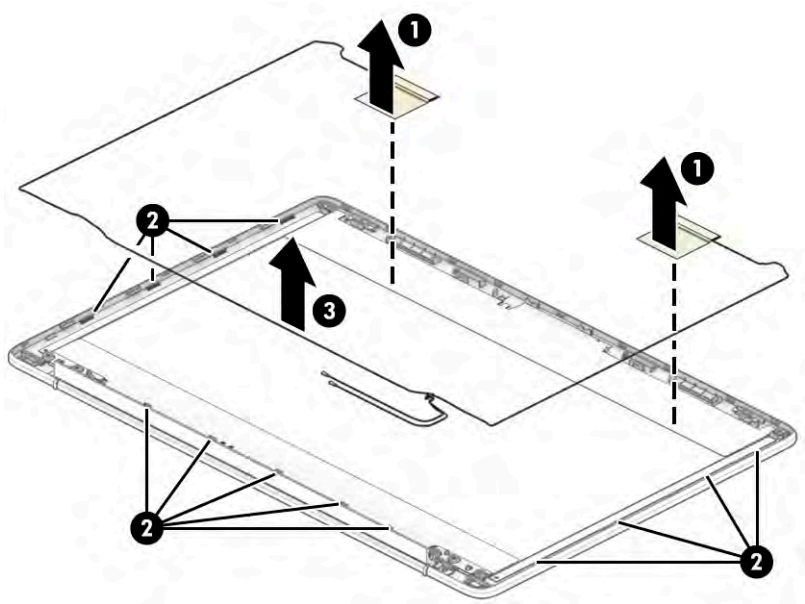

    The display rear cover is available as the following spare part numbers:

    L91529-001: Forest teal

    L91530-001: Mineral silver

    L91531-001: Ceramic white

    M41236-001: Pale rose gold

Reverse this procedure to reassemble and replace the display assembly.

Keyboard with top cover

The top cover with keyboard remains after removing all other spare parts from the computer. In this section, the first table provides the main spare part number for the top cover/keyboards. The second table provides the country codes.

Table 5-9 Keyboard with top cover descriptions and part numbers

Description	Spare part number
Snow white; no backlight	L91515-xx1
Snow white; backlit	L91516-xx1
Ash grey; no backlight	L91511-xx1
Ash grey; backlit	L91512-xx1
Natural silver; no backlight	L91513-xx1
Natural silver; backlit	L91514-xx1
Jet black, no backlight, no B&O logo on top cover	M74072-xx1

Table 5-9 Keyboard with top cover descriptions and part numbers (continued)

Description	Spare part number
Jet black, backlit, no B&O logo on top cover	M74073-xx1
Snow white, no backlight, no B&O logo on top cover	M74074-xx1
Snow white, backlit, no B&O logo on top cover	M74075-xx1
Natural silver, no backlight, no B&O logo on top cover	M75313-xx1
Natural silver, backlit, no B&O logo on top cover	M75314-xx1
Ash grey, no backlight, no card reader	M75857-xx1
Ash grey, backlit, no card reader	M75858-xx1
Natural silver, no backlight, no card reader	M75859-xx1
Natural silver, backlit, no card reader	M75860-xx1
Snow white, no backlight, no card reader	M75861-xx1
Snow white, backlit, no card reader	M75862-xx1

Table 5-10 Spare part country codes

For use in country or region	Spare part number	For use in country or region	Spare part number	For use in country or region	Spare part number
Belgium	-A41	Germany	-041	Spain	-071
Denmark, Finland, and Norway	-DH1	International	-B31	United Kingdom	-031
French Canada	-DB1	Italy	-061	United States	-001
France	-051	Japan	-291		

6 Backing up, resetting, and recovering

This chapter provides information about the standard procedures of backing up your personal data, resetting your computer to original factory conditions, and recovering your operating system with the Chromebook Recovery Utility.

Backing up

You can back up your data to an optional USB flash drive or SD memory card or through Google Drive™.

For detailed information about creating a backup, go to http://www.support.google.com.

Resetting

A factory reset erases the information on your computer hard drive, including files in the Downloads folder. Before you reset, back up your files to an optional USB flash drive, to an SD memory card, or through Google Drive. The factory reset will not delete your files at these locations.

You might want to reset your computer in the following circumstances:

- You see the message "Reset this Chrome device."
- You are having problems with your user profile or settings.
- You restarted your computer, and it still doesn't work properly.
- You want to change the owner of your computer.

To reset your computer:

1. Under the **Settings** menu, select **Advanced**.
2. Under **Reset settings**, in the **Powerwash** section, select **Reset**.
3. In the window that appears, select **Powerwash**, and then select **Continue**.
4. Follow the on-screen instructions to reset your computer, and sign in with your Google Account.

   NOTE: The account you sign in with after you reset your computer is recognized as the owner account.

5. After you complete the reset, you can set up your computer and check to see whether the problem is fixed.

Recovering

When your Chrome OS™ doesn't work properly, you can perform a recovery. A recovery reinstalls the operating system, software programs, and original factory settings. It deletes locally saved files and saved networks for all accounts. A system recovery does not affect Google Accounts and data synced to Google Drive.

IMPORTANT: Recovery permanently erases everything on your computer hard drive, including your downloaded files. If possible, back up your files before you recover your computer.

NOTE: For more information about performing a system recovery on your computer, go to http://www.support.google.com.

Before you begin the recovery process, you need the following prerequisites:

- A USB flash drive or SD memory card with a capacity of 4 GB or greater. All data is erased from this storage device when the recovery media is created, so back up all files from the device before you begin.
- A computer with internet access. You must also have administrative rights to the computer.
- Computer AC adapter. The computer must be plugged into AC power during recovery.
- The “Chrome OS is missing or damaged” screen displaying on your computer. If this message is not already displayed:
  - Turn on the computer, press and hold the esc+f3 keys, and then press the power button. The computer restarts, and the screen shows the “Chrome OS is missing or damaged” screen.

Installing the Chromebook Recovery Utility

The Chromebook™ Recovery Utility recovers the original operating system and software programs that were installed at the factory. You can install this utility from the Chrome Web Store on any computer.

To install the Chromebook Recovery Utility:

▲ Open the Chrome Web Store, search for `chrome recovery`, select **Chromebook Recovery Utility** from the Apps list, and follow the on-screen instructions.

Creating recovery media

You can use recovery media to recover the original operating system and software programs that were installed at the factory.

To create recovery media:

1. Turn on a computer that has internet access.

   NOTE: You must have administrative rights to the computer.

2. Select the **Launcher** icon, and then select **All Apps**.
3. In the Apps window, select **Recovery**, and then select **Get started**.
4. Follow the on-screen instructions to create the recovery media.

   NOTE: All data and partitions on your recovery media will be deleted. Do not remove the USB flash drive or SD memory card until the process is complete.

Recovering the Chrome operating system

Use these instructions to recover the Chrome operating system on your computer using the recovery media that you created.

1. Disconnect any external devices connected to your computer, plug in the power cord, and then turn on the computer.
2. To enter recovery mode, press and hold esc+f3, and then press the power button. When the “Chrome OS is missing or damaged” screen appears, insert the recovery media into your computer. The recovery process begins immediately.
3. Wait while Chrome verifies the integrity of the recovery media.

NOTE: If you need to cancel the recovery during the verification process, press and hold the power button until the computer turns off. Do not disrupt the system recovery process after the verification step is complete.

NOTE: If an error message is displayed, you might need to run the Chrome Recovery Utility again or use a different USB flash drive or SD memory card.

4. When the “System Recovery is complete” message appears, remove the recovery media.

   The computer restarts with Chrome OS reinstalled.

Setting up your computer after a reset or recovery

After a reset or recovery is complete, perform the initial setup process.

For details about setting up the computer, go to http://www.support.google.com.

Erasing and reformatting the recovery media

When you create recovery media, the USB flash drive or SD memory card is formatted as a recovery tool. After recovery, you must erase the recovery media to reuse your storage device. Follow these steps to use the Chromebook Recovery Utility to erase the recovery media.

1. Select the **Launcher** icon, and then select **All Apps**.
2. In the apps window, select **Recovery**.
3. Select the **Settings** icon, and then select **Erase recovery media**.
4. Select the USB flash drive or SD memory card that you inserted, select **Continue**, and then select **Erase now**.
5. After the recovery media is erased, select **Done** to close the Chromebook Recovery Utility, and then remove the USB flash drive or SD memory card.

   The media is ready to be formatted using a formatting tool provided by your operating system.

7 Specifications

This chapter provides specifications for your computer.

Computer specifications

This section provides specifications for your computer. When traveling with your computer, the computer dimensions and weights, as well as input power ratings and operating specifications, provide helpful information.

Table 7-1 Computer specifications

	Metric	U.S.
Dimensions		
Width	**325.5 mm**	12.8 in
Depth	**218.5 mm**	8.60 in
Height	**17.9 mm**	0.71 in
Weight	**1325 g**	2.9 lb
Temperature		
Operating	**5°C to 35°C**	41°F to 95°F
Nonoperating	**–20°C to 60°C**	–4°F to 140°F
Relative humidity (noncondensing)		
Operating	10% to 90%	
Nonoperating	5% to 95%	
Maximum altitude (unpressurized)		
Operating	**–15 m to 3,048 m**	–50 ft to 10,000 ft
Nonoperating	**–15 m to 12,192 m**	–50 ft to 40,000 ft
NOTE: Applicable product safety standards specify thermal limits for plastic surfaces. The device operates well within this range of temperatures.		

Display specifications

This section provides specifications for your display.

Table 7-2 Display specifications

	Metric	U.S.
Active diagonal size	**35.6 cm**	14.0 in
Resolution	1920 × 1080 (FHD)	
	1368 × 766 (HD)	

Table 7-2 Display specifications (continued)

	Metric	U.S.
Surface treatment	Antiglare or BrightView	
Brightness	HD: 220 nits FHD: 250 nits	
Viewing angle	HD: SVA FHD: UWVA	
Backlight	LED	
Display panel interface	eDP	

8 Power cord set requirements

This chapter provides power cord requirements for countries and regions.

The wide-range input feature of the computer permits it to operate from any line voltage from 100 V ac to 120 V ac, or from 220 V ac to 240 V ac.

The three-conductor power cord set included with the computer meets the requirements for use in the country or region where the equipment is purchased.

Power cord sets for use in other countries or regions must meet the requirements of the country and region where the computer is used.

Requirements for all countries

These power cord requirements are applicable to all countries and regions.

- The length of the power cord set must be at least **1.0 m** (3.3 ft) and no more than **2.0 m** (6.5 ft).
- All power cord sets must be approved by an acceptable accredited agency responsible for evaluation in the country or region where the power cord set will be used.
- The power cord sets must have a minimum current capacity of 10 A and a nominal voltage rating of 125 V ac or 250 V ac, as required by the power system of each country or region.
- The appliance coupler must meet the mechanical configuration of an EN 60 320/IEC 320 Standard Sheet C13 connector for mating with the appliance inlet on the back of the computer.

Requirements for specific countries and regions

To determine power cord requirements for specific countries and regions, use this table.

Table 8-1 Power cord requirements for specific countries and regions

Country/region	Accredited agency	Applicable note number
Argentina	IRAM	1
Australia	SAA	1
Austria	OVE	1
Belgium	CEBEC	1
Brazil	ABNT	1
Canada	CSA	2
Chile	IMQ	1
Denmark	DEMKO	1
Finland	FIMKO	1
France	UTE	1
Germany	VDE	1

Table 8-1 Power cord requirements for specific countries and regions (continued)

Country/region	Accredited agency	Applicable note number
India	BIS	1
Israel	SII	1
Italy	IMQ	1
Japan	JIS	3
Netherlands	KEMA	1
New Zealand	SANZ	1
Norway	NEMKO	1
People's Republic of China	CCC	4
Saudi Arabia	SASO	7
Singapore	PSB	1
South Africa	SABS	1
South Korea	KTL	5
Sweden	SEMKO	1
Switzerland	SEV	1
Taiwan	BSMI	6
Thailand	TISI	1
United Kingdom	ASTA	1
United States	UL	2

1. The flexible cord must be Type H05VV-F, three-conductor, 0.75 mm^2 conductor size. Power cord set fittings (appliance coupler and wall plug) must bear the certification mark of the agency responsible for evaluation in the country or region where it will be used.
2. The flexible cord must be Type SVT/SJT or equivalent, No. 18 AWG, three-conductor. The wall plug must be a two-pole grounding type with a NEMA 5-15P (15 A, 125 V ac) or NEMA 6-15P (15 A, 250 V ac) configuration. CSA or C-UL mark. UL file number must be on each element.
3. The appliance coupler, flexible cord, and wall plug must bear a T mark and registration number in accordance with the Japanese Dentori Law. The flexible cord must be Type VCTF, three-conductor, 0.75 mm^2 or 1.25 mm^2 conductor size. The wall plug must be a two-pole grounding type with a Japanese Industrial Standard C8303 (7 A, 125 V ac) configuration.
4. The flexible cord must be Type RVV, three-conductor, 0.75 mm^2 conductor size. Power cord set fittings (appliance coupler and wall plug) must bear the CCC certification mark.
5. The flexible cord must be Type H05VV-F three-conductor, 0.75 mm^2 conductor size. KTL logo and individual approval number must be on each element. Approval number and logo must be printed on a flag label.
6. The flexible cord must be Type HVCTF three-conductor, 1.25 mm^2 conductor size. Power cord set fittings (appliance coupler, cable, and wall plug) must bear the BSMI certification mark.
7. For 127 V ac, the flexible cord must be Type SVT or SJT 3-conductor, 18 AWG, with plug NEMA 5-15P (15 A, 125 V ac), with UL and CSA or C-UL marks. For 240 V ac, the flexible cord must be Type H05VV-F three-conductor, 0.75 mm^2 or 1.00 mm^2 conductor size, with plug BS 1363/A with BSI or ASTA marks.

9 Recycling

When a nonrechargeable or rechargeable battery has reached the end of its useful life, do not dispose of the battery in general household waste. Follow the local laws and regulations in your area for battery disposal.

HP encourages customers to recycle used electronic hardware, HP original print cartridges, and rechargeable batteries. For more information about recycling programs, see the HP website at http://www.hp.com/recycle.

Index

A
AC adapter light 4, 5
action keys
identifying 8
audio-in (microphone) jack, identifying 5
audio-out (headphone) jack, identifying 5

B
backing up 49
battery
light 4, 5
Bluetooth label 9
bottom cover
removal 26
spare part number 26

C
cables
spare part numbers 16
camera 6
identifying 6
camera light, identifying 6
caring for your computer 22
cautions
electrostatic discharge 18, 19
Chromebook Recovery Utility, installing 50
cleaning your computer 22
caring for wood veneer 24
disinfecting 23
HP Easy Clean 22
removing dirt and debris 22
components
display 6
keyboard area 7
left side 5
right side 4
computer major components 11
computer specifications 52

D
display
specifications 52
display assembly
subcomponents 14

E
electrostatic discharge (ESD) 18, 19
preventing damage 18, 19, 20
esc key, identifying 8

G
grounding methods 18, 19, 20
guidelines
packaging 18, 24
transporting 18, 24
workstation 18

H
hard drive
specifications 52
headphone (audio-out) jack 5

I
illustrated parts catalog 11
internal microphones, identifying 6

J
jacks
audio-in (microphone) 5
audio-out (headphone) 5

K
keyboard
product description 2
keyboard with top cover
spare part numbers 47
keys
esc 8

L
labels
Bluetooth 9
regulatory 9
serial number 9
service 9
wireless certification 9
WLAN 9
lights
AC adapter and battery 4, 5
camera 6

M
memory card reader, identifying 5
microphone (audio-in) jack, identifying 5
miscellaneous parts, spare part numbers 16

P
packaging guidelines 18, 24
pointing device, product description 2
ports
product description 2
power connector cable
removal 38
spare part numbers 38
power cord
requirements for all countries 54
requirements for specific countries and regions 54
set requirements 54
product description
keyboard 2
pointing device 2
ports 2
product name and number, computer 9

R
recovery media
creating 50
erase 51
recovery, performing 49
regulatory information
regulatory label 9
wireless certification labels 9
removal and replacement
procedures 26
resetting 49

S
serial number, computer 9
service labels, locating 9
spare part country codes 47
speaker
    removal 31
    spare part numbers 31
speakers, identifying 7
specifications
    computer 52
    display 52
    hard drive 52
static electricity 18, 19
support information 24
system board
    removal 34
    spare part numbers 34
system recovery
    Chrome operating system 50
    Chromebook Recovery Utility 50
    recovery media 50

T
touchpad
    removal 31
    spare part numbers 31
touchpad zone, identifying 7
transporting guidelines 18, 24
traveling with the computer 9

U
USB board
    removal 33
    spare part numbers 33

W
wireless certification label 9
WLAN antennas, identifying 6
WLAN device 9
WLAN label 9
WLAN module
    removal 29
    spare part numbers 29
workstation guidelines 18