GERMAN POOL 德國寶

台式抽油煙機
Wall-Mount Range Hood | TOU-716

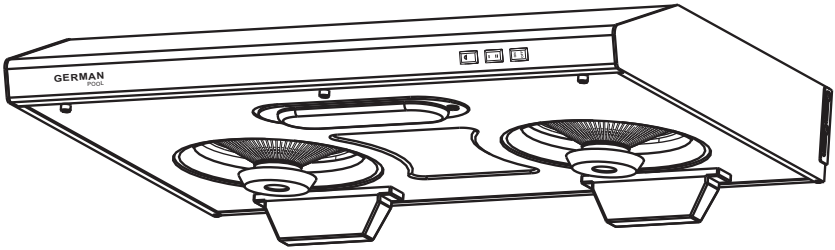

在使用之前請詳細閱讀「使用說明書」及「保用條款」, 並妥為保存。

Please read these user manual and warranty information carefully before use and keep them handy for future reference.

CE

使 用 說 明 書 USER MANUAL

請即進行保用登記 !

有關保用條款細則，請看本說明書最後一頁。

Please register your warranty information now !

For Warranty Terms & Conditions,

please refer to the last page of these User Manual.

目錄 Table of Contents

注意事項 Notice Before Use 04

產品結構 Product Structure 06

安裝說明 Installation Instructions 07

電路圖 Wiring Diagram 08

操作說明 Operating Instructions 09

清潔與保養 Care & Maintenance 11

常見故障及處理 Troubleshooting 13

技術規格 Technical Specifications 14

保用條款 Warranty Terms & Conditions 15

注意事項 Notice Before Use

重要說明

為安全起見，初次使用產品前請先細閱本說明書，並保存說明書，以便作參考之用。

本產品只供家居使用。請必須依照本說明書內的指示安裝及操作。

1. 本產品並不適用於兒童、身體或心智殘障、缺乏經驗或知識的人士使用和玩樂，除非該人士得到負責保障其安全的人士的監督或指引。
2. 請將產品遠離兒童。不要讓兒童單獨使用本產品。
3. 為免發生危險，若發現電源線有任何損壞，必須停止使用產品，並立即聯絡本公司或合資格技術人員進行更換。
4. 清潔、維修或拆除抽油煙機前應先切斷電源。
5. 電源插座必須安裝接地線。
6. 請接駁獨立排氣喉將油煙排往室外。
7. 抽油煙機不可與燃氣或使用其他能源之器具共同使用同一排放管道。
8. 抽油煙機安裝於氣體爐上方時，抽油煙機底部距離爐面700±50㎜之間為宜。
9. 切勿在抽油煙機下　接燃點明火。

Important

For safety purpose, you should read the instructions carefully before using the appliance for the first time. Save the instructions for future reference.

The appliance is designed for domestic use and may only be installed and operated in accordance with these instructions for use.

1. The appliance is not intended for the use of, and playing with, by persons (including children) with reduced physical, sensory or mental capabilities, or any individual lack of experience and knowledge, unless they have been given supervision or instruction.
2. Keep children away from the appliance do not let them use the appliance without supervision.
3. If the power supply cord is damaged, do not operate the appliance. Contact German Pool or licensed technician for a replacement immediately.
4. Disconnect the power supply before cleaning, repairing or dismantling the range hood.
5. The range hood must be earthed.
6. Connect the range hood with an dependent air vent to exhaust lampblack.
7. The air must not be discharged into a venting pipe that is used for exhausting fumes from appliances burning gas or other fuels.
8. The appliance should be positioned 700±50mm above the cooking range.
9. Do not flame under the range hood.

注意事項 Notice Before Use

10. 安裝、清潔、更換燈泡及拆除抽油煙機時請戴上安全手套，以免受傷。

11. 請勿　接潑水噴淋機身，以免損壞電器機件。

12. 德國寶抽油煙機抽吸力特強，大部分油煙在抽油煙機操作時已被抽出室外，故此集油器的油汙量很少，請放心使用。

13. 當使用抽油煙機時，如房間內同時使用燃器或其他能源的器具，房間必須有足夠通風。

14. 用戶必須遵照有關排放空氣的條例來安裝及使用本產品。

15. 抽油煙機的風輪及易沾油汙的部分之表面均須最少每星期進行清洗一次，避免油汙因長時間積聚而引致火警危險。

10. Please wear safety gloves for installation, cleaning, light bulb changing and dismantling, in order to prevent injuries.

11. To protect electrical parts, do not splash or spray the range hood with water.

12. German Pool range hood has high venting efficiency. Most of the grease vapor will be exhausted through the air vent when the range hood is in operation. Only very little amount of residual oil will be collected in the Oil Collecting Tray.

13. There should be adequate ventilation in the room when the range hood is used along with appliances that burn gas or other fuels.

14. Regulations concerning the discharge of air have to be fulfilled.

15. To prevent fire hazard in case of oil build-up, the Turbine Impellers and other easily-soiled parts must be cleaned at least once a week.

產品結構 Product Structure

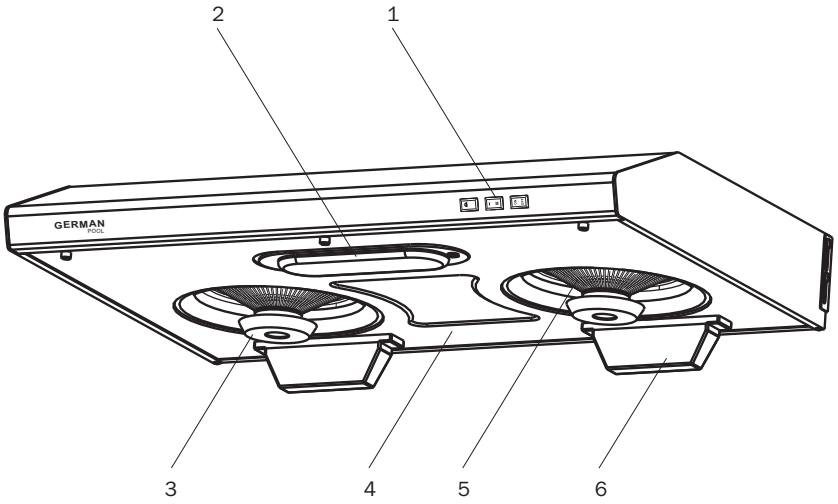

1. 開關
2. 照明燈
3. 防漏油杯(一對)
4. 底蓋
5. 保護網(一對)
6. 油杯(一對)

1. Switch
2. Light Bulb
3. Oil Collector (small) (1 pair)
4. Bottom Cover
5. Safety Mesh (1 pair)
6. Oil Collector (1 pair)

安裝說明 Installation Instructions

安裝前注意

必須由專業合資格技術人員安裝及維修抽油煙機。

安裝前先接上電源檢查照明與摩打開關是否正常操作。

Pre-installation Notice

The range hood must be installed and repaired by authorized qualified technicians.

Before installation, plug in and check if all switches are functional.

周圍環境

抽油煙機四周應避免門窗過多，而產生過大之空間對流。如果油煙未上升至25cm有效吸力範圍，抽油煙機則無法發揮正常效果。

Installation Environment

For efficient air extraction, avoid opening too many windows surrounding range hood for this will cause air convection which prevents cooking fumes from rising to 25 cm (the effective suction / exhaust area).

安裝高度

抽油煙機底部距離爐面700±50mm之間為宜，距離越接近700mm，抽油煙效果越佳(如圖A)。

Height of Installation

The appliance should be positioned 700 ± 50mm above the cooking range. A distance that is near 700mm results in higher venting efficiency (Fig A).

風管長度

風管長度之標準接法(如圖B)。排風出口至機體之距離，應盡量縮短，以免氣流擠壓於風管內，影響其排風效果。

Length of Exhaust Pipe

The length of the exhaust pipe should be minimized to avoid air turbulence inside the pipe (Fig B).

機體保持水平

確定安裝位置時，機體應保持前後左右水平，若機體傾斜積油會漏出(如圖C)。

Keep the Hood Level

The installation of the hood should remain level, in order to prevent oil from spilling over from oil collectors (Fig C).

圖A Fig A

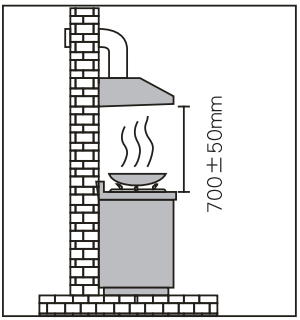

圖B Fig B

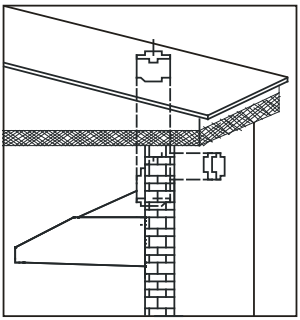

圖C Fig C

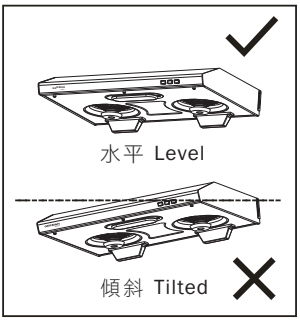

電路圖 Wiring Diagram

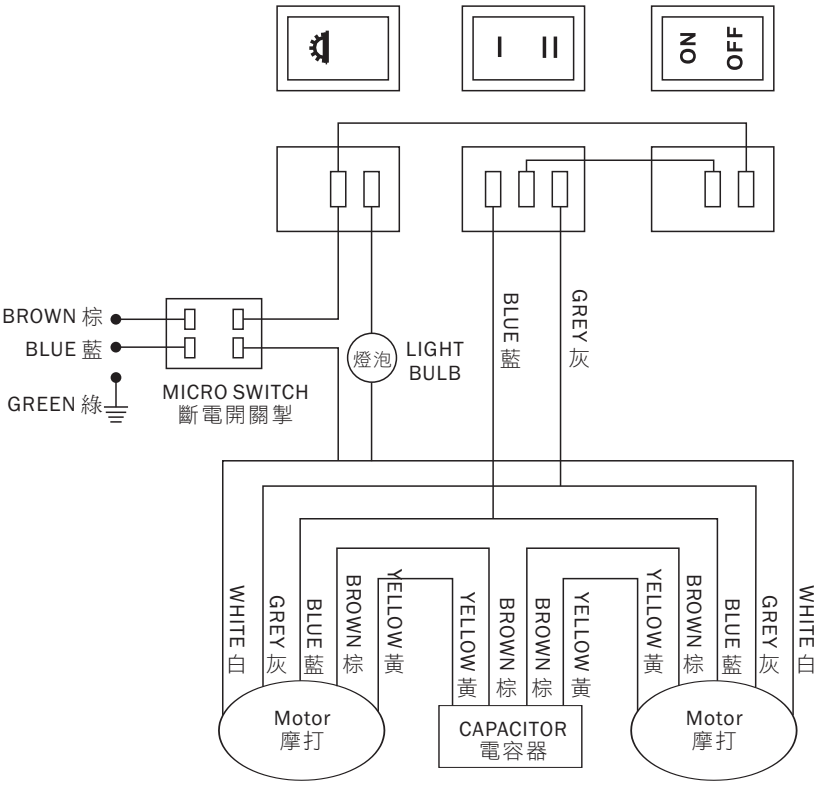

操作說明 Operating Instructions

重要事項

1. 抽油煙機風管必須連接於屋外，嚴禁　接排進屋內。
2. 使用氣體爐或其他燃料烹飪時，室內必須有足夠通風空間。
3. 抽油煙機之排氣管嚴禁與氣體管或其他燃料排氣管相通。
4. 建議於使用後讓機器繼續運作1分鐘，以便將機器內及室內的油煙抽走。

Important

1. The exhaust duct must be exposed outdoors.
2. There should be adequate ventilation in the room when a gas cooking range or other fuels are in use for cooking.
3. The air from the range hood must not be discharged into a venting pipe that is used for exhausting fumes from appliances burning gas or other fuels.
4. It is advised to keep the range hood running for 1 minute after cooking to completely expel the fumes from indoors and inside the machine.

操作開關　Control

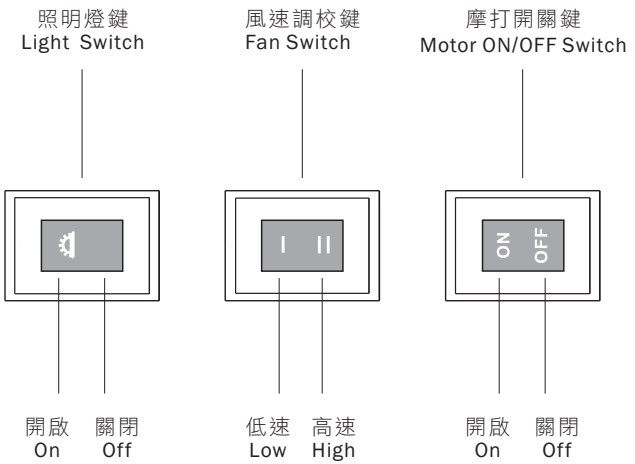

操作說明 Operating Instructions

I. 風速鍵 I II

- 選擇風速：按所需風速鍵，選擇風扇速度。

I	低速
II	高速

- 關閉風扇：欲關閉風扇只需按摩打開關鍵至"OFF"位置。

I. Fan Speed I II

- Select fan speed : Select fan speed with one of the Fan Speed buttons.

I	low speed
II	high speed

- Fan off : To turn off the fan, just press the Motor ON/OFF switch to “OFF”.

II. 照明燈鍵

- 按照明燈鍵開啟照明。

II. Light Switch

- Press the Light switch to turn it on.

清潔與保養 Care & Maintenance

重要事項

- 為達致本產品的最佳效能，用戶應最少每周清洗抽油煙機一次。
- 清潔、保養及維護前必須先拔掉電源插頭。
- 每天使用完畢後，可於抽油煙機外部用中性清潔劑擦拭。
- 集油杯積油一半或以上時，需要將油汙倒掉以免溢出。
- 警告：如用戶不依照本説明書指示進行維修或清潔保養(特別是風輪及易沾油汙部分)，有可能會導致火警。

Important

- To ensure the most optimum efficiency, the range hood must be cleaned at least once a week.
- Power plug must be disconnected before cleaning and repair.
- Use mild detergent to clean surface of the hood each time after use.
- Clear oil from oil collectors when they are more than half full of grease, in order to avoid spilling.
- Warning : There is a risk of fire if the repair and cleaning of the range hood (especially the fan and other easily-soiled parts) are not carried out in accordance with the instructions.

清潔與保養步驟 Care & Maintenance Procedures

1. 清潔抽油煙機前先關掉電源。
2. 取出油杯，再扭開3顆易拆螺絲，將底蓋拆下。
3. 依順時針方向將油盤除下。
4. 將鎖緊帽按順時針方向旋鬆，取出風輪。

1. Switch off the power supply before cleaning the range hood.
2. Remove the two oil containers, then turn the 3 screws to detach the bottom cover.
3. Detach the oil collecting trays by turning them clockwise.
4. Loosen the locking caps by turning the caps clockwise and take out the turbine impeller.

清潔與保養 Care & Maintenance

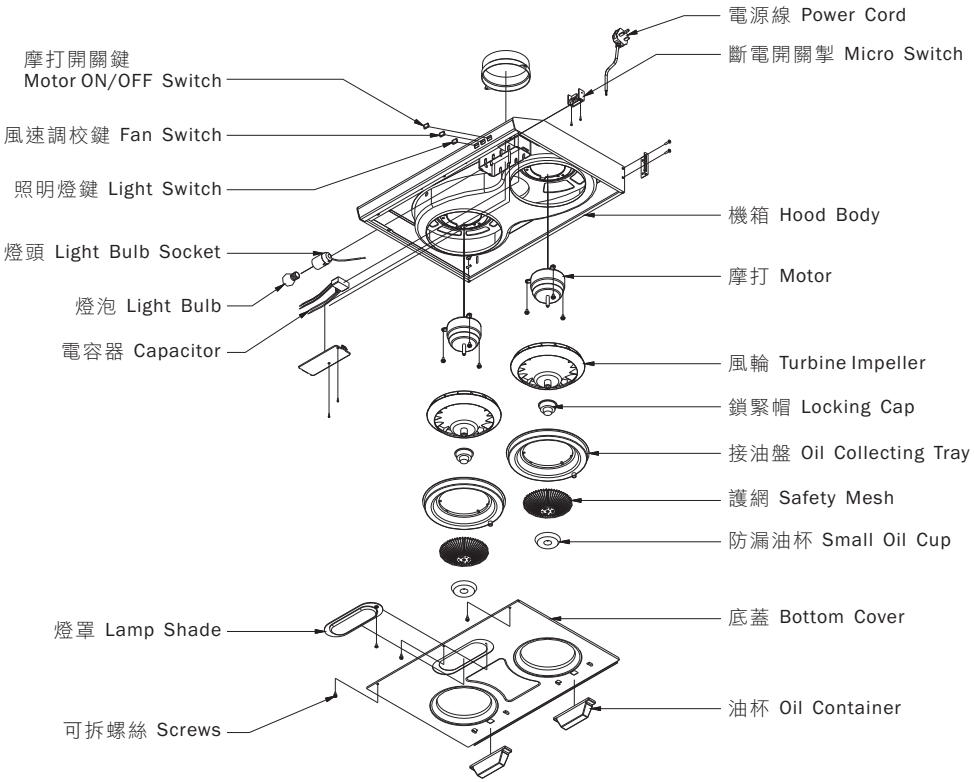

5. 清潔時，內外表面可用軟布沾中性清潔劑擦拭並用清水擦拭，注意避免刮花機身內外表面。

6. 清潔後，按上述相反的程序裝上，請檢查底板上的掛勾與機身凹槽是否可靠接合，以策安全。

5. Use a soft cloth to clean the inner and outer surfaces with a mild liquid detergent, and then rinse the trays with water. Avoid using a rough or metal brush to scrub the surface.

6. After cleaning, assemble the parts in reverse order as shown above. To ensure safety, make sure that the bottom cover is securely hooked with the hood body.

常見故障及處理 Troubleshooting

如遇以下一般性故障，請按以下指示處理，如仍處理不了或未發現故障原因，請與本公司維修服務中心聯繫。

If you encounter the following common troubles, please solve according to the following instructions. If the problem cannot be solved or a cause cannot be found, please contact our customer services centre.

注意：為安全著想，再次特別提醒，請勿自行拆卸修理。

Note : For safety purpose, do not dismantle the product for repair by yourself.

故障現象 Phenomenon	原因分析 Possible Cause	處理方法 Solution
按下照明燈，照明燈不運作。 Press the light button, but lighting is not working.	- 電源插頭未插好 - 照明燈壞 - 電源線脱落或接觸不良 - The plug is not inserted to the socket properly - The light is out of order - Power cord comes off and is not attached properly	- 檢查插頭，應可靠地插入插座 - 更換照明燈 - 維修或更換 - Check whether the plug is properly plugged to the socket - Change the light bulb - Repair or replace
電機不運作。 The machine is not working.	- 葉輪被卡阻 - 電容器接觸不良或損壞 - 電機損壞 - Impeller gets stuck - Capacitor is not well connected or damaged - Motor is damaged	- 排除葉輪卡阻故障 - 維修或更換 - 維修或更換 - Clear impeller from obstructions - Repair or replace - Repair or replace
機身震動。 The hood vibrates.	- 機身懸掛不牢固 - 電機安裝不牢固 - 葉輪受損平衡被破壞 - Not firmly mounted - Not installed securely - Impeller is damaged and becomes imbalanced	- 緊固機身 - 緊固機身 - 維修或更換 - Secure the hood - Secure the hood - Repair or replace
選擇不同風速，但風機不運作。 Fan works at one speed but not at another.	- 控制開關失靈 - 轉換電路未接通 - Power switch malfunction - Circuit is not connected well	- 維修或更換 - 維修或更換 - Repair or replace - Repair or replace
抽煙效果不好。 Does not exhaust effectively.	- 機身安裝過高 - The hood is mounted at a rather high position	- 降低安裝高度 - Lower the installation position

技術規格 Technical Specifications

型號 Model	TOU-716
電壓 Voltage / 頻率 Frequency	220-240 V ~ 50 Hz
功率 Power (燈/ Lighting+摩打/ Motors)	157 W (±5%)
照明燈 Lighting	40 W
傳動方　Rotating Method	雙摩打 Twin motors
風速選擇 Speed Selection	2（高High/低Low)
摩打轉速 Motor Speed	Max. 1,450±50 R.P.M.
排風量 Exhaust Flow	Max. 900 m^3/hr
排風口　Exhaust Outlet Diameter	152 mm
機身尺寸 Dimensions	(H) 100 mm (W) 708 mm (D) 508 mm
淨重 Net Weight	10.3 kg

產品規格及設計如有變更，恕不另行通知。
Specifications are subject to change without prior notice.

中英文版本如有出入，一概以中文版為準。
If there is any inconsistency or ambiguity between the English version and the Chinese version, the Chinese version shall prevail.

本產品使用說明書以 www.germanpool.com 網上版為最新版本。
Refer to www.germanpool.com for the most up-to-date version of the User Manual.

請填妥以下表格並與發票一併保存，以便維修時核對資料。用戶提供本公司之所有資料必須正確無誤，並且須於維修時出示購買發票，否則免費保用將會無效。
Please fill out the form below. This information and the original purchase invoice will be required for any repairs.
Warranty will be invalid if information provided is found to be inaccurate or purchase invoice is not presented.

型號 Model No.： TOU-716

機身號碼 Serial No.：_____ 發票號碼 Invoice No.：_____

購買商號 Purchased From：_____ 購買日期 Purchase Date：_____

保用條款

本抽油煙機機件在正常使用下，總代理德國寶將根據下列條款為客戶免費提供全機及零件保用壹年、摩打保用三年（自購買日起計算）。

＊ 貴戶須在購機十天內，以下列其中一種方式向本公司登記資料，保用手續方正式生效：

1)填妥本公司網頁內之保用登記表格
www.germanpool.com/warranty

2)填妥保用登記證，並連同購機發票之副本一併郵寄到客戶服務部
（本公司將不發還發票副本或登記證）

1. 未能出示購買發票正本者，將不獲免費維修服務。

2. 用戶應依照說明書的指示操作。本保用並不包括：
- 安裝、上門檢驗、更換零件之人工或運輸費用等；
- 因天然與人為意外造成的損壞（包括運輸及其它）；
- 產品外殼之表面、燈泡、任何塑膠附件及輔助裝置如集油杯等；
- 電源接合不當、不依說明書而錯誤或疏忽使用本機所引致之損壞。

3. 於下列情況下，用戶之保用資格將被取消：
- 購買發票有任何非認可之刪改；
- 產品被用作商業或工業用途；
- 產品經非認可之技術人員改裝或加裝任何配件；
- 機身編號被擅自塗改、破壞或刪除。

4. 總代理有權選擇維修或更換配件或其損壞部份。

5. 產品一經被轉讓，其保用即被視作無效。

＊ 此保用只在香港、九龍、新界區有效，東涌、愉景灣及離島，須額外收取交通費用。

客戶服務及維修中心

德國寶(香港)有限公司
香港九龍紅磡暢通道1號
中旅貨運物流中心8樓
電話：+852 2333 6249
傳真：+852 2356 9798
電郵：repairs@germanpool.com

Warranty Terms & Conditions

Under normal operations, the range hood will receive a 1-year full warranty and the motor therein a 3-year warranty provided by German Pool (effective starting from the date of purchase).

* This warranty is not valid until Customer's registration information is returned to and received by our Service Centre within 10 days of purchase via one of the following methods:
1) Visit our website and register online:
www.germanpool.com/warranty
2) Complete all fields on the attached Warranty Card and mail it back to our Customer Service Centre along with a photocopy of the purchase invoice (Warranty Card and invoice copy will not be returned to Customer)

1. Customer who fails to present original purchase invoice will be disqualified for free warranty.

2. Customer should always follow the operating instructions. This warranty does not apply to:
- labour costs for installation, on-site check-up, replacement of parts and other transportation costs;
- damages caused by accidents of any kind (including transport and others);
- casing of hood body, light bulbs, plastic parts and accessories such as oil collecting cups;
- operating failures resulted by incorrect voltage, improper operations and unauthorized installations or repairs.

3. This warranty is invalid if:
- purchase invoice is modified by unauthorized party;
- product is used for any commercial or industrial applications;
- product is repaired or modified by unauthorized personnel, or unauthorized parts are installed;
- serial number is modified, damaged or removed from the product.

4. German Pool will, in its discretion, repair or replace any defective part.

5. This warranty will be void if there is any transfer of ownership from the original purchaser.

* Service area includes Hong Kong Island, Kowloon and New Territories only. Repairs in Tung Chung, Discovery Bay or other areas are subject to an extra service charge.

Customer Service & Pepair Centre

German Pool (Hong Kong) Limited
8/F, China Travel (Cargo) Logistics Centre
1 Cheong Tung Road
Hung Hom, Kowloon, Hong Kong
電話：+852 2333 6249
傳真：+852 2356 9798
電郵：repairs@germanpool.com

此保用只適用於香港 | This warranty is valid only in Hong Kong

GERMAN POOL 德國寶

德 國 寶 （香 港） 有 限 公 司　German Pool (Hong Kong) Limited

香港
Hong Kong

香港九龍土瓜灣馬頭角道116號
新寶工商中心2期113號室
Room 113, Newport Centre Phase II,
116 Ma Tau Kok Road, Tokwawan,
Kowloon, Hong Kong

電話 Tel: +852 2773 2888
傳真 Fax: +852 2765 8215

中國
China

廣東省佛山市順德區大良南國東路
德順廣場三層
3/F, Takshun Plaza, Nanguo East
Road, Shunde, Foshan, Guangdong

電話 Tel: +86 757 2980 8308
傳真 Fax: +86 757 2980 8318

澳門
Macau

澳門宋玉生廣場263號
中土大廈15樓 I 座
Alameda Dr. Carlos D'Assumpcao
No. 263, Edif. China Civil Plaza, 15
Andar, I, Macau

電話 Tel: +853 2875 2699
傳真 Fax: +853 2875 2661

香港名牌十年成就獎
HONG KONG TOP BRAND TEN YEAR ACHIEVEMENT AWARD

香港卓越名牌
HONG KONG PREMIER BRAND

2007
CERTIFICATE AWARD FOR THE BEST BRAND ENTERPRISE
且德貴品牌企業

中小企業
最佳拍檔大獎

HONG KONG CONSUMERS CHOICE 2007

版權所有。未獲德國寶授權，不得翻印、複製或使用本說明書作任何商業用途，違者必究。
All rights reserved. Copying, reproducing or using the contents of this manual is not allowed without prior authorization from German Pool, violators will be prosecuted.

www.germanpool.com