Appendix 1 – Thermistor conversion table

Temp. (°C)	V_{ADC} (V)	Temp. (°C)	V_{ADC} (V)	Temp. (°C)	V_{ADC} (V)
-30	2.441	30	1.535	100	0.251
-20	2.392	40	1.264	110	0.189
-10	2.311	50	1.006	120	0.143
0	2.189	60	0.779	130	0.109
10	2.016	70	0.593	140	0.084
20	1.794	80	0.446	150	0.065
25	1.668	90	0.334		

Appendix 2 – Thermocouple conversion table

Temp. (°C)	V_{ADC} (V)	Temp. (°C)	V_{ADC} (V)	Temp. (°C)	V_{ADC} (V)
-200	0.003	180	0.587	660	1.474
-180	0.018	200	0.622	760	1.658
-160	0.036	220	0.657	780	1.695
-140	0.057	240	0.693	800	1.731
-120	0.081	260	0.729	820	1.767
-100	0.107	280	0.765	840	1.803
-80	0.135	300	0.802	860	1.838
-60	0.164	320	0.856	880	1.874
-40	0.196	340	0.875	900	1.909
-20	0.229	360	0.912	920	1.944
-10	0.246	380	0.949	940	1.979
0	0.263	400	0.984	960	2.014
10	0.281	420	1.024	980	2.049
20	0.298	440	1.061	1000	2.083
25	0.307	460	1.098	1020	2.117
30	0.316	480	1.136	1040	2.151
40	0.334	500	1.173	1060	2.185
50	0.352	520	1.211	1080	2.221
60	0.371	540	1.249	1100	2.253
80	0.407	560	1.286	1120	2.286
100	0.444	580	1.324	1140	2.319
120	0.480	600	1.361	1160	2.352
140	0.516	620	1.399	1180	2.384
160	0.552	640	1.436	1200	2.417

pico Technology Limited

ADC-20/ADC-24 Terminal Board

User Guide

Issues:

1) 8.11.05 Created by JB.
2) 13.12.05 p10: added 0V connection to thermocouple schematic.
3) 22.3.06 p11: removed C1.

Copyright 2006 Pico Technology Limited. All rights reserved.

Interworld Electronics & Computer Ind. Inc.
P.O. 1280
145 Tyee Drive
Point Roberts, WA
90801

Tel: 1-877-902-2979
Fax: 1-877-FAX-IECI
Email: sales@interworldna.com

Note: The AD595 will require a separate power supply. For full details of the AD595, see the Analog Devices website at www.analog.com. Please observe electrostatic discharge (ESD) precautions when constructing this circuit, to avoid damage to the AD595.

The circuit shown can measure temperatures in the range -200°C to +1250°C. The component values are as follows:

R_A = 44.2 kΩ 0.1% metal film type.
R_B = 11 kΩ 0.1% metal film type.
R_S = 75 kΩ 0.1% metal film

2.5.4 Thermocouple

This device has to be used in conjunction with the AD595 IC. The circuitry involved in connecting to the ADC is the most complex of the three types and great care should be taken if choosing this method.

The AD595 IC is an integrated thermocouple instrumentation amplifier with built-in cold junction compensation. The diagram below shows how to connect the AD595 IC and the thermocouple to the terminal board. The output voltage is not linear with temperature, so you will need to consult the table in Appendix 2 to convert the voltages to temperatures.

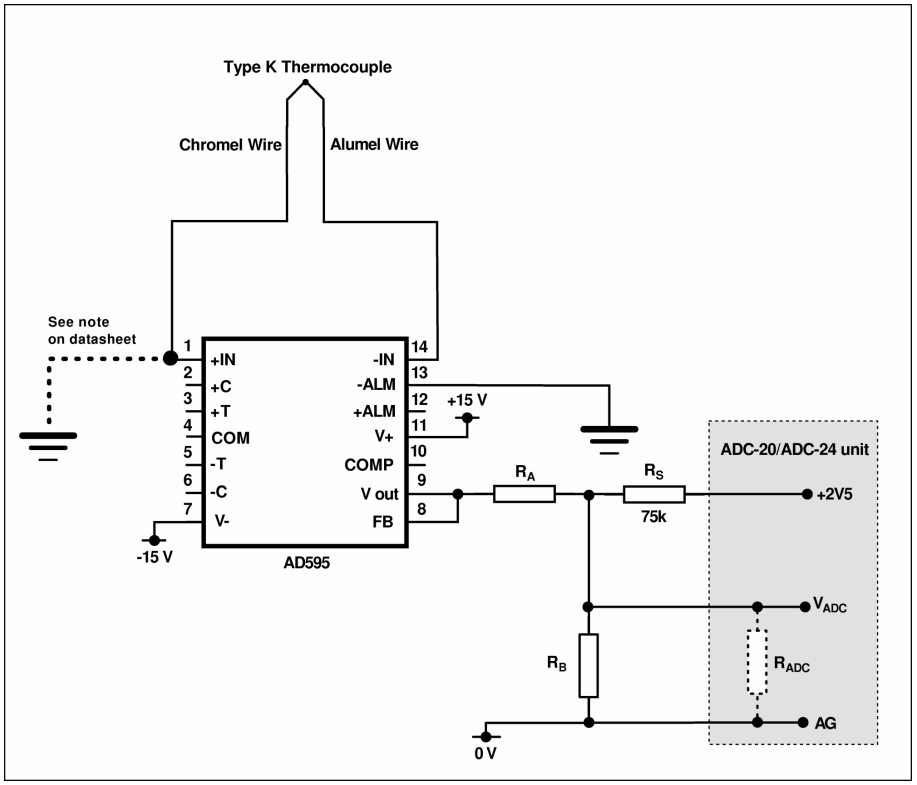

Temperature sensor circuit with thermocouple and AD595

CONTENTS

1 Overview 1
1.1 Introduction 1
1.2 Terminals and component sites 2
2 Taking measurements 3
2.1 Voltage 3
2.1.1 General 3
2.1.2 Direct connection 3
2.1.3 Voltage divider connection 4
2.2 Current 6
2.3 Light level 7
2.4 pH 7
2.5 Temperature 8
2.5.1 Introduction 8
2.5.2 LM35DZ IC 8
2.5.3 Precision thermistor 9
2.5.4 Thermocouple 10
Appendix 1 – Thermistor conversion table 12
Appendix 2 – Thermocouple conversion table 12

2.5.3 *Precision thermistor*

You can use a precision thermistor in conjunction with the reference output of the ADC-20/ADC-24 to measure temperatures accurately.

You will need to consult a table before using PicoLog to convert the voltages into temperature readings. This can be found in Appendix 1. The figures come from the thermistor manufacturer's data sheet.

The diagram below shows how to connect the thermistor to the terminal board.

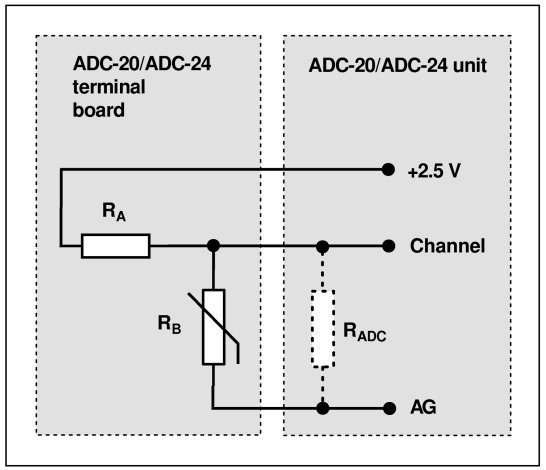

Temperature sensor circuit with precision thermistor

The thermistor above is an NTC (Negative Temperature Coefficient) type and should be fitted in position R_B. Resistor R_A is a precision metal film type with a value of 49.9 kΩ and a tolerance of 0.1%.

2.5 Temperature

2.5.1 Introduction

If you use the ADC-20/ADC-24 Terminal Board and ADC-20 or ADC-24 with a suitable sensor and the Picolog software, you can measure temperatures accurately. There are three methods of measuring temperature, each using one of the following sensors:

- LM35DZ integrated circuit sensor
- Precision thermistor
- Thermocouple used with AD595 integrated circuit

Note: If you require several temperature sensors, Pico Technology's USB TC-08 thermocouple interface is a better product to use, as you can plug up to eight thermocouples into it simultaneously.

2.5.2 LM35DZ IC

The LM35DZ IC is a combined precision temperature sensor and signal conditioner supplied in a three-pin TO92-style package. Of the three devices, this is the easiest to connect to the ADC. The device measures temperatures in the range 0°C to +100°C and includes the electronics required to convert temperatures to a linear voltage of 10 mV/°C. The diagram below shows how to connect this device to the terminal board.

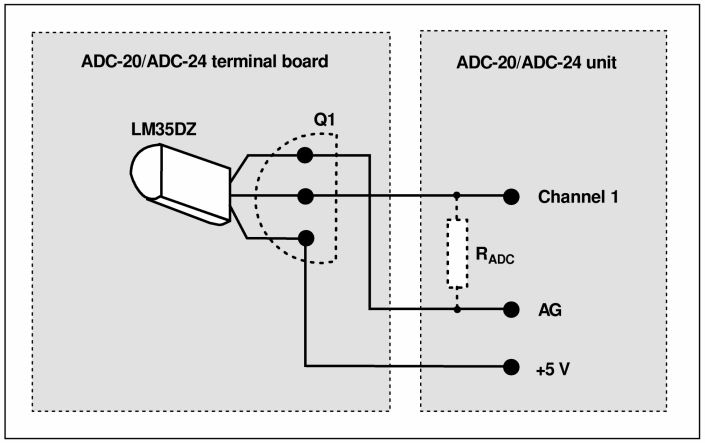

Temperature sensor circuit with LM35 IC

Fit the LM35 to the terminal board in position Q1. To convert the voltage to a temperature reading, use PicoLog's scaling equation facility. Set the scaling equation to: X * 100. For more information, see PicoLog's electronic manual (PLW044.PDF in your Pico Technology installation directory).

1 Overview

1.1 Introduction

The ADC-20/ADC-24 Terminal Board is designed for use with the 8-channel ADC-20 and 16-channel ADC-24 High-Resolution Data Loggers. For simple applications, you can simply connect sensor wires to the screw terminals on the Terminal Board, without the need for soldering. For more advanced applications, the Terminal Board enables you to design and build sensor circuits that condition measurements for the data loggers to process. The board has empty locations for extra components (not supplied), as described later in this manual.

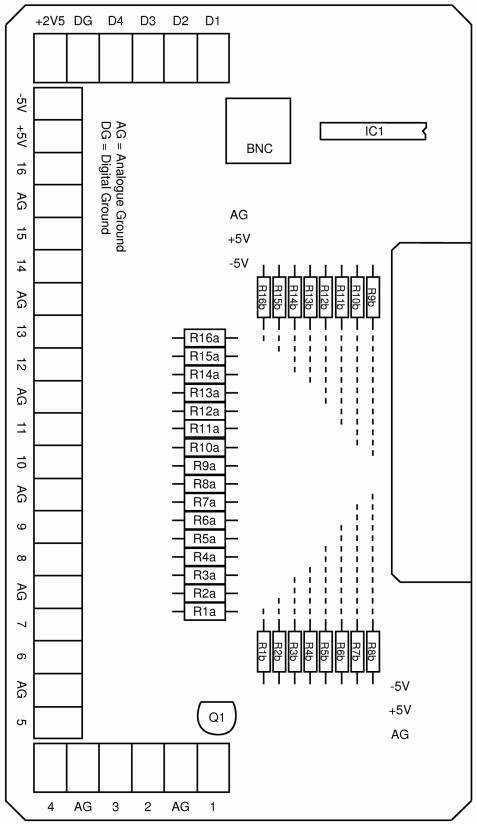

Layout of ADC-20/ADC-24 Terminal Board

1.2 Terminals and component sites

The table below shows the purpose of each of the terminals and empty component sites.

Terminal or site	Description
1 to 16	Connections to ADC channels 1 to 16.
AG	Connections to analogue ground. (Note 1)
DG	Connections to digital ground. (Note 1)
+5 V and -5 V	Low-current power supply (up to 2 mA) for sensors, if required.
+2.5 V	Reference voltage.
R1a to R16a	Sites for series resistors in voltage dividers. Referred to in the text as R_A. R1a is connected to channel 1, R2a to channel 2 and so on. If you use one of these sites, you must cut the thin track beneath the resistor.
R1b to R16b	Sites for shunt resistors in voltage dividers. Referred to in the text as R_B. R1b is connected to channel 1, R2b to channel 2 and so on.
Q1	Site for LM35 temperature sensor.
BNC	Site for upright BNC socket.
IC1	Site for a 14-pin DIL integrated circuit. You can use wires to link pins to channels.

Terminals and component sites

Note 1: We recommend that you do not connect AG and DG together, as this would degrade measurement accuracy.

1.3 Connecting to the data logger

You can plug the Terminal Board directly into the analog connector on the ADC-20 and ADC-24 Data Loggers. Alternatively, you can use a standard 25-way male-D to female-D parallel cable to connect the Terminal Board to the Data Logger.

2.3 Light level

You can use the ADC-20/ADC-24 Terminal Board with the ADC-20 or ADC-24 to measure light levels. You will also need to use a Light Dependent Resistor (LDR) and a fixed resistor.

Use the +5 V output to supply power to the circuit. Use a resistor of around 1MΩ for R_A, and place the LDR in location R_B.

2.4 pH

You can use the ADC-20/ADC-24 Terminal Board with the ADC-20 or ADC-24 to measure pH. The circuit shown below allows the use of any standard pH probe, including the one available from Pico Technology (part number DD011). If you use this method, you will have to calibrate the probe using two or three buffer solutions (solutions of known pH values).

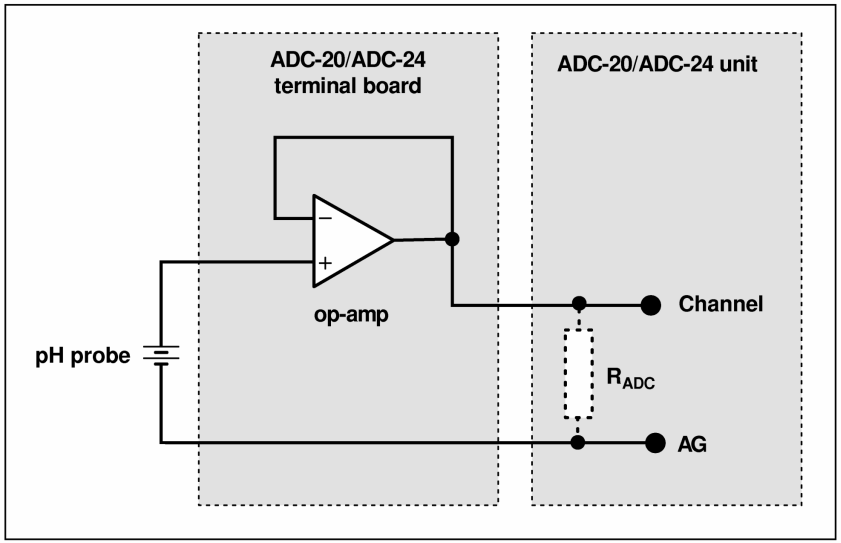

pH sensor circuit

Note: The op-amp should have a very high input impedance. An LT1114 is suitable.

Beware - the pH of a liquid can vary widely with temperature.

A much simpler and more complete way to measure pH is available. Known as the Pico DrDAQ pH Logger (PP274), this is an optimised version of the above circuit. By using the temperature sensor included, it will compensate for variations in pH caused by temperature fluctuations.

2.2 Current

You can use the ADC-20/ADC-24 Terminal Board with the ADC-20 or ADC-24 to measure current. If the current returns through ground, you can use a simple shunt resistor to convert the current into a voltage before measuring with the ADC. The diagram below shows a circuit with a shunt resistor R_B.

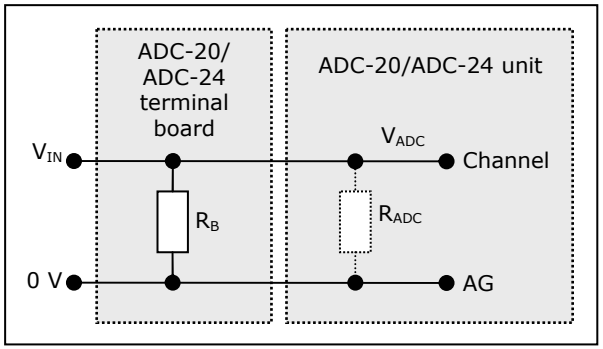

Shunt resistor circuit

The locations for R_B appear as R1b to R16b in the diagram of the terminal board at the start of this booklet. You will need to calculate the resistor value R_B from the following equation:

$$R_B = \frac{V_{RANGE}}{I_{MAX}}$$

where I_{MAX} is the highest current you expect to measure and V_{RANGE} is the selected input range. (For example, if the ±625 mV range is selected, V_{RANGE} is 625 mV.)

Warning!
Under no circumstances use this method for measuring mains currents.
Seek professional advice!

2 Taking measurements

2.1 Voltage

2.1.1 General

When using the ADC-20/ADC-24 Terminal Board with the ADC-20 or ADC-24 to measure voltages, you can connect the voltage source in one of two ways: directly, by plugging straight into the channel, or indirectly, via a voltage divider.

2.1.2 Direct connection

For voltage sources measuring from -2.5 V to +2.5 V, use a direct connection to any channel.

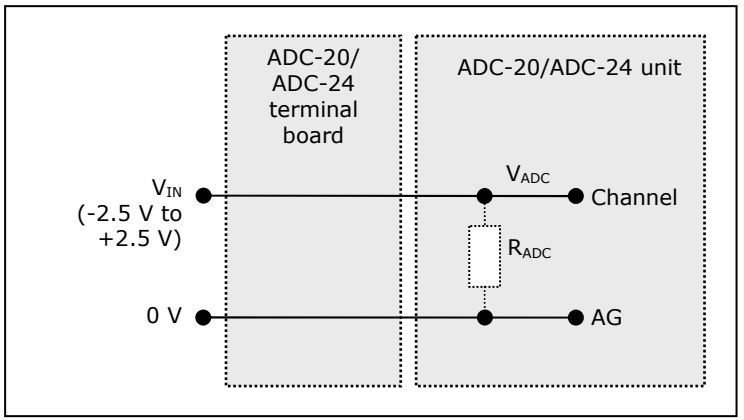

Direct input to channel

2.1.3 *Voltage divider connection*

For voltages beyond -2.5 V to +2.5 V, use a voltage divider connection.

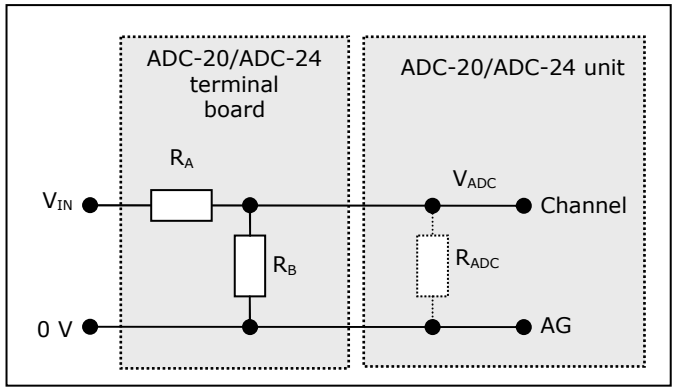

Voltage divider

The voltage that the ADC sees, V_{ADC}, depends on V_{IN} and the values of R_A and R_B, and is given by the following equation:

$$V_{ADC} = V_{IN} \times \frac{R_B}{R_A + R_B}$$

Choose values of R_A and R_B so that V_{ADC} is approximately +2.5 V when V_{IN} is at its highest.

To minimise errors in the measured voltage, V_{ADC}, caused by loading of the source voltage V_{IN}, ensure that the combined resistance of R_A + R_B is much greater than the resistance of the voltage source. If you are unsure of the resistance of the voltage source, use large values for R_A and R_B such that R_A + R_B is about 10 kΩ.

If you have chosen a value for R_B that is greater than 10 kΩ, and you need high accuracy, then you will need to take into account the ADC's input resistance R_{ADC}, which acts in parallel with R_B. Use the following equation to obtain a value for the parallel equivalent resistance of R_B and R_{ADC}, R_{BEQ}, then use R_{BEQ} instead of R_B in the previous equation:

$$R_{BEQ} = \frac{R_B \times R_{ADC}}{R_B + R_{ADC}}$$

where R_{ADC} = 1 MΩ.

The following four noise problems are often associated with potential divider circuits:

1) **Noise from source voltage.** Try fitting a capacitor as described below.
2) **RF interference is picked up at high impedance points.** Smaller values for R_A and R_B may help.
3) **Noise on the earth connections.**
4) **The signal 0 V line is connected to mains earth.** Try to avoid this situation.

In the event of 1 or 2 (above) occurring, and you want to try a capacitor, ensure that you have fitted resistor R_A and cut the corresponding track beneath the resistor. Fit the capacitor in place of or in parallel with R_B, as necessary. Use the following equation for C, the value of the capacitor:

$$C = \frac{1}{2\pi f \times R}$$

where R is R_A or the smaller of R_A and R_B, and f is the highest signal frequency in hertz.