SIEMENS

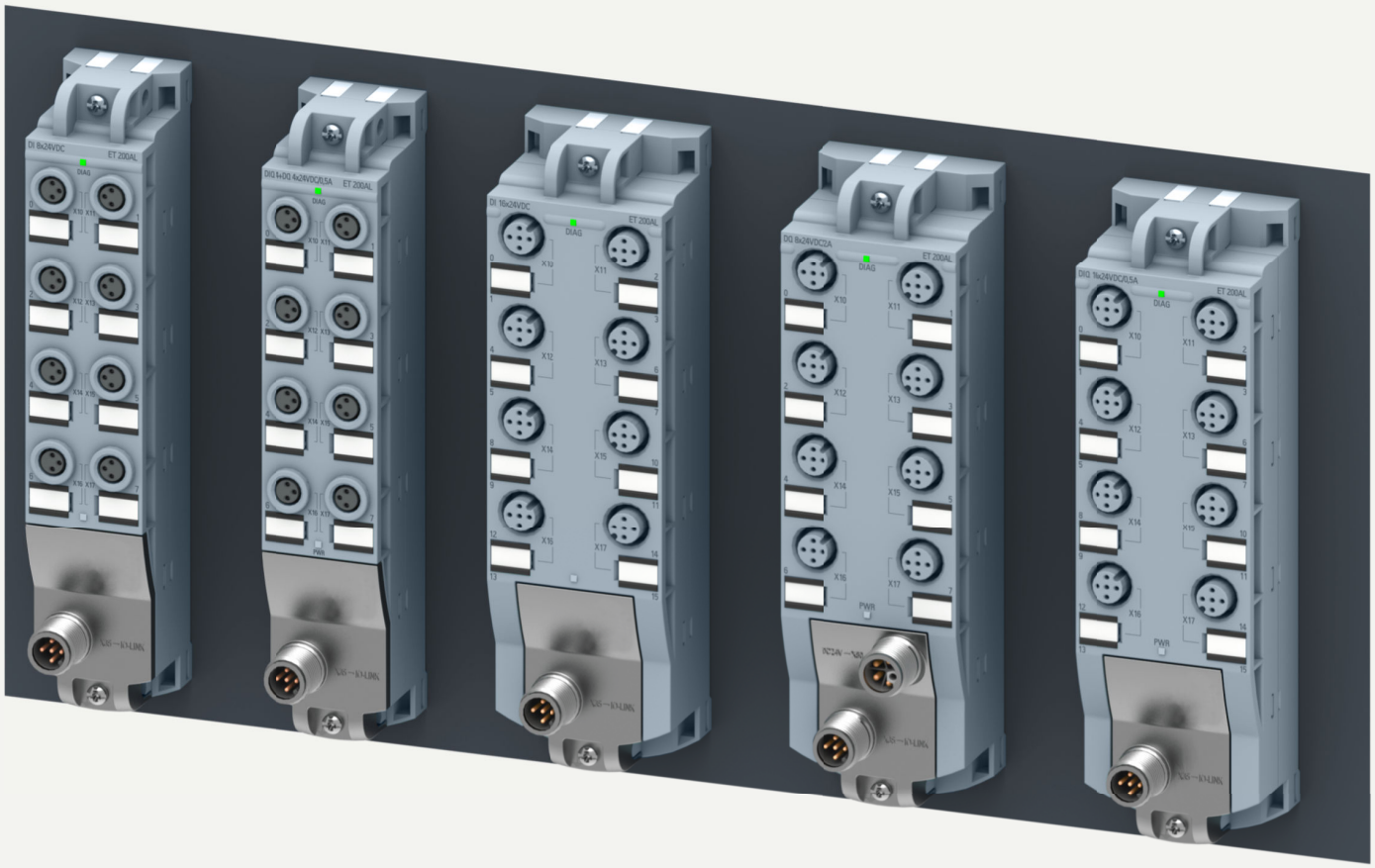

Edition 12/2022

SYSTEM MANUAL

SIMATIC

ET 200AL

IO-Link I/O modules

support.industry.siemens.com

SIEMENS

SIMATIC

ET 200AL
IO-Link I/O modules

System Manual

ET 200AL IO-Link I/O Modules Guide 1

System overview 2

Application planning 3

Mounting 4

Connecting 5

Configuring 6

Commissioning 7

Maintenance 8

Technical specifications 9

Safety-related shutdown of ET 200AL IO-Link modules A

Dimension drawings B

Accessories/spare parts C

12/2022
A5E48755395-AC

Legal information

Warning notice system

This manual contains notices you have to observe in order to ensure your personal safety, as well as to prevent damage to property. The notices referring to your personal safety are highlighted in the manual by a safety alert symbol, notices referring only to property damage have no safety alert symbol. These notices shown below are graded according to the degree of danger.

⚠ DANGER

indicates that death or severe personal injury **will** result if proper precautions are not taken.

⚠ WARNING

indicates that death or severe personal injury **may** result if proper precautions are not taken.

⚠ CAUTION

indicates that minor personal injury can result if proper precautions are not taken.

NOTICE

indicates that property damage can result if proper precautions are not taken.

If more than one degree of danger is present, the warning notice representing the highest degree of danger will be used. A notice warning of injury to persons with a safety alert symbol may also include a warning relating to property damage.

Qualified Personnel

The product/system described in this documentation may be operated only by **personnel qualified** for the specific task in accordance with the relevant documentation, in particular its warning notices and safety instructions. Qualified personnel are those who, based on their training and experience, are capable of identifying risks and avoiding potential hazards when working with these products/systems.

Proper use of Siemens products

Note the following:

⚠ WARNING

Siemens products may only be used for the applications described in the catalog and in the relevant technical documentation. If products and components from other manufacturers are used, these must be recommended or approved by Siemens. Proper transport, storage, installation, assembly, commissioning, operation and maintenance are required to ensure that the products operate safely and without any problems. The permissible ambient conditions must be complied with. The information in the relevant documentation must be observed.

Trademarks

All names identified by ® are registered trademarks of Siemens AG. The remaining trademarks in this publication may be trademarks whose use by third parties for their own purposes could violate the rights of the owner.

Disclaimer of Liability

We have reviewed the contents of this publication to ensure consistency with the hardware and software described. Since variance cannot be precluded entirely, we cannot guarantee full consistency. However, the information in this publication is reviewed regularly and any necessary corrections are included in subsequent editions.

Siemens AG
Digital Industries
Postfach 48 48
90026 NÜRNBERG
GERMANY

A5E48755395-AC
Ⓟ 12/2022 Subject to change

Copyright © Siemens AG 2020 - 2022.
All rights reserved

Preface

Purpose of the documentation

This documentation provides you with important information on how to configure, install, wire and commission the IO-Link I/O modules of the SIMATIC ET 200AL distributed I/O system.

Basic knowledge required

A basic knowledge of automation technology is required to understand the documentation.

Validity of the documentation

This documentation applies to the IO-Link I/O modules of the SIMATIC ET 200AL distributed I/O system.

Changes compared to the previous version

This manual contains the following changes/additions compared to the previous version:

- Update of the section Standards and authorizations (Page 51)
- Update of the section Electromagnetic compatibility (Page 54)

Conventions

Observe the notes labeled as follows:

NOTE

A note contains important information regarding:

- The product described in the documentation
- The handling of the product
- The part of the documentation to which special attention should be paid in order to avoid damage.

Recycling and disposal

For environmentally compatible recycling and disposal of your electronic waste, contact a company certified for the disposal of electronic waste. Dispose of the equipment according to the applicable regulations in your country.

Additional support

- Information about Technical Support is available in section Siemens Industry Online Support (Page 5).
- Information about the online catalog and online order system is available in section Industry Mall (Page 6).
- The range of technical documentation for the individual SIMATIC products and systems can be found on the Internet (http://www.siemens.com/simatic-tech-doku-portal).

Security information

Siemens provides products and solutions with industrial security functions that support the secure operation of plants, systems, machines and networks.

In order to protect plants, systems, machines and networks against cyber threats, it is necessary to implement – and continuously maintain – a holistic, state-of-the-art industrial security concept. Siemens' products and solutions constitute one element of such a concept.

Customers are responsible for preventing unauthorized access to their plants, systems, machines and networks. Such systems, machines and components should only be connected to an enterprise network or the internet if and to the extent such a connection is necessary and only when appropriate security measures (e.g. firewalls and/or network segmentation) are in place.

For additional information on industrial security measures that may be implemented, please visit (https://www.siemens.com/industrialsecurity).

Siemens' products and solutions undergo continuous development to make them more secure. Siemens strongly recommends that product updates are applied as soon as they are available and that the latest product versions are used. Use of product versions that are no longer supported, and failure to apply the latest updates may increase customers' exposure to cyber threats.

To stay informed about product updates, subscribe to the Siemens Industrial Security RSS Feed visit (https://www.siemens.com/cert).

Siemens Industry Online Support

You can find current information on the following topics quickly and easily here:

- **Product support**
  All the information and extensive know-how on your product, technical specifications, FAQs, certificates, downloads, and manuals.
- **Application examples**
  Tools and examples to solve your automation tasks – as well as function blocks, performance information and videos.
- **Services**
  Information about Industry Services, Field Services, Technical Support, spare parts and training offers.

- **Forums**
  For answers and solutions concerning automation technology.
- **mySupport**
  Your personal working area in Industry Online Support for messages, support queries, and configurable documents.

This information is provided by the Siemens Industry Online Support in the Internet (https://support.industry.siemens.com/cs/ww/en/).

Industry Mall

The Industry Mall is the catalog and order system of Siemens AG for automation and drive solutions on the basis of Totally Integrated Automation (TIA) and Totally Integrated Power (TIP).
You can find catalogs for all automation and drive products on the Internet (https://mall.industry.siemens.com) and in the Information and Download Center.

Table of contents

1 ET 200AL IO-Link I/O Modules Guide 9

1.1 Information classes ET 200AL IO-Link I/O Module 9

1.2 Basic tools 10

1.3 S7 Port Configuration Tool (S7-PCT) 11

1.4 SIMATIC Technical Documentation 12

2 System overview 14

2.1 System overview 14

2.2 What are ET 200AL IO-Link I/O modules? 14

2.3 Components 16

3 Application planning 17

3.1 Hardware configuration 17

3.2 Configuration of IO-Link I/O modules 17

4 Mounting 20

4.1 Basics 20

4.2 Mounting modules 20

5 Connecting 25

5.1 Rules and regulations for operation 25

5.2 Operation of the IO-Link I/O modules on a grounded/ungrounded infeed 27

5.3 Electrical configuration of the IO-Link I/O modules 32

5.4 Connecting IO-Link I/O modules to functional ground 33

5.4.1 Mounting IO-Link I/O modules on a conductive surface 34

5.4.2 Mounting IO-Link I/O modules on a non-conductive surface 35

5.5 Wiring 36

5.6 Marking of IO-Link I/O modules 39

5.6.1 Factory markings 39

5.6.2 Optional markings 40

5.6.3 Mounting identification labels 41

6 Configuring 42

6.1 Requirements 42

6.2 IODD and Port Configuration Tool - S7-PCT 42

7 Commissioning 45

7.1 Startup of the IO-Link I/O module 45

8 Maintenance 46
8.1 Replacing modules 46
8.2 Firmware update 47
8.3 Resetting a module 48
8.4 Maintaining/cleaning the modules 50

9 Technical specifications 51
9.1 Standards and authorizations 51
9.2 Electromagnetic compatibility 55
9.3 Transport and storage conditions 56
9.4 Mechanical and climatic ambient conditions 57
9.5 Details on insulation, protection class, degree of protection and rated voltage 58
9.6 Safety-related symbols for IP65/IP67 modules 59

A Safety-related shutdown of ET 200AL IO-Link modules 60

B Dimension drawings 64

C Accessories/spare parts 65
C.1 Accessories/spare parts 65
C.2 UL-approved cables 66

Glossary 69

Index 72

ET 200AL IO-Link I/O Modules Guide

1

1.1 Information classes ET 200AL IO-Link I/O Module



The documentation for the SIMATIC ET 200AL IO-Link I/O modules is divided into three areas. This arrangement enables you to access the specific content you require.
You can download the documentation free of charge from the Internet (https://support.industry.siemens.com/cs/ww/en/view/109742667).

Basic information



The System Manual describes in detail the configuration, installation, wiring and commissioning of the SIMATIC ET 200AL IO-Link distributed I/O system.

- ET 200AL IO-Link I/O Modules System Manual

Device information



Equipment manuals contain a compact description of the module-specific information, such as properties, wiring diagrams, characteristics and technical specifications.

- IO-Link I/O Modules Equipment Manual

General information



The function manuals contain detailed descriptions on general topics relating to the SIMATIC IO-Link system.

- IO-Link System Function Manual

Manual Collection ET 200AL

The Manual Collection contains the complete documentation on the SIMATIC ET 200AL distributed I/O system gathered together in one file.
You can find the Manual Collection on the Internet.
(https://support.industry.siemens.com/cs/ww/en/view/95242965)

1.2 Basic tools

The tools described below support you in all steps: from planning, over commissioning, all the way to analysis of your system.

TIA Selection Tool

The TIA Selection Tool tool supports you in the selection, configuration, and ordering of devices for Totally Integrated Automation (TIA).

As successor of the SIMATIC Selection Tools , the TIA Selection Tool assembles the already known configurators for automation technology into a single tool.

With the TIA Selection Tool , you can generate a complete order list from your product selection or product configuration.
You can find the TIA Selection Tool on the Internet.
(https://support.industry.siemens.com/cs/ww/en/view/109767888)

SIMATIC Automation Tool

You can use the SIMATIC Automation Tool to perform commissioning and maintenance activities on various SIMATIC S7 stations as bulk operations independent of TIA Portal.

The SIMATIC Automation Tool offers a wide range of functions:

- Scanning of a PROFINET/Ethernet system network and identification of all connected CPUs
- Assignment of addresses (IP, subnet, Gateway) and device name (PROFINET device) to a CPU
- Transfer of the date and the programming device/PC time converted to UTC time to the module
- Program download to CPU
- RUN/STOP mode switchover
- CPU localization through LED flashing
- Reading out of CPU error information
- Reading the CPU diagnostic buffer
- Reset to factory settings
- Firmware update of the CPU and connected modules

You can find the SIMATIC Automation Tool on the Internet.
(https://support.industry.siemens.com/cs/ww/en/view/98161300)

PRONETA

SIEMENS PRONETA (PROFINET network analysis) is a commissioning and diagnostic tool for PROFINET networks. PRONETA Basic has two core functions:

- In the network analysis, you get an overview of the PROFINET topology. Compare a real configuration with a reference installation or make simple parameter changes, e.g. to the names and IP addresses of the devices.
- The "IO test" is a simple and rapid test of the wiring and the module configuration of a plant, including documentation of the test results.

You can find SIEMENS PRONETA Basic on the Internet:
(https://support.industry.siemens.com/cs/ww/en/view/67460624)

SIEMENS PRONETA Professional is a licensed product that offers you additional functions. It offers you simple asset management in PROFINET networks and supports operators of automation systems in automatic data collection/acquisition of the components used through various functions:

- The user interface (API) offers an access point to the automation cell to automate the scan functions using MQTT or a command line.
- With PROFIenergy diagnostics, you can quickly detect the current pause mode or the readiness for operation of devices that support PROFIenergy and change these as needed.
- The data record wizard supports PROFINET developers in reading and writing acyclic PROFINET data records quickly and easily without PLC and engineering.

You can find SIEMENS PRONETA Professional on the Internet. (https://www.siemens.com/proneta-professional)

SINETPLAN

SINETPLAN, the Siemens Network Planner, supports you in planning automation systems and networks based on PROFINET. The tool facilitates professional and predictive dimensioning of your PROFINET installation as early as in the planning stage. In addition, SINETPLAN supports you during network optimization and helps you to exploit network resources optimally and to plan reserves. This helps to prevent problems in commissioning or failures during productive operation even in advance of a planned operation. This increases the availability of the production plant and helps improve operational safety.

The advantages at a glance

- Network optimization thanks to port-specific calculation of the network load
- Increased production availability thanks to online scan and verification of existing systems
- Transparency before commissioning through importing and simulation of existing STEP 7 projects
- Efficiency through securing existing investments in the long term and the optimal use of resources

You can find SINETPLAN on the Internet (https://new.siemens.com/global/en/products/automation/industrial-communication/profinet/sinetplan.html).

1.3 S7 Port Configuration Tool (S7-PCT)

SIMATIC S7-PCT

The Port Configuration Tool (PCT) is a PC-based software for the parameter assignment of Siemens IO-Link Master modules and IO-Link devices from any manufacturer.

You integrate IO-Link-devices using the standardized device description "IODD", which you get from the respective device manufacturer. S7-PCT supports version 1.0 and V1.1 of the IODD.

S7-PCT is called via the hardware configuration of the IO-Link Master from STEP 7. When STEP 7 is not used or the IO-Link Master is not operated on a SIMATIC controller, "standalone"-operation is also possible.

You can find additional information on IO-Link on the Internet (https://new.siemens.com/global/en/products/automation/industrial-communication/io-link.html).

1.4 SIMATIC Technical Documentation

Additional SIMATIC documents will complete your information. You can find these documents and their use at the following links and QR codes.
The Industry Online Support gives you the option to get information on all topics. Application examples support you in solving your automation tasks.

Overview of the SIMATIC Technical Documentation

Here you will find an overview of the SIMATIC documentation available in Siemens Industry Online Support:

Industry Online Support International (https://support.industry.siemens.com/cs/ww/en/view/109742705)

Watch this short video to find out where you can find the overview directly in Siemens Industry Online Support and how to use Siemens Industry Online Support on your mobile device:

Quick introduction to the technical documentation of automation products per video (https://support.industry.siemens.com/cs/us/en/view/109780491)

YouTube video: Siemens Automation Products - Technical Documentation at a Glance (https://youtu.be/TwLSxxRQQsA)

mySupport

With "mySupport" you can get the most out of your Industry Online Support.

Registration	You must register once to use the full functionality of "mySupport". After registration, you can create filters, favorites and tabs in your personal workspace.
Support requests	Your data is already filled out in support requests, and you can get an overview of your current requests at any time.
Documentation	In the Documentation area you can build your personal library.
Favorites	You can use the "Add to mySupport favorites" to flag especially interesting or frequently needed content. Under "Favorites", you will find a list of your flagged entries.
Recently viewed articles	The most recently viewed pages in mySupport are available under "Recently viewed articles".

CAx data	The CAx data area gives you access to the latest product data for your CAx or CAe system. You configure your own download package with a few clicks: • Product images, 2D dimension drawings, 3D models, internal circuit diagrams, EPLAN macro files • Manuals, characteristics, operating manuals, certificates • Product master data

You can find "mySupport" on the Internet. (https://support.industry.siemens.com/My/ww/en)

Application examples

The application examples support you with various tools and examples for solving your automation tasks. Solutions are shown in interplay with multiple components in the system - separated from the focus on individual products.
You can find the application examples on the Internet.
(https://support.industry.siemens.com/cs/ww/en/ps/ae)

System overview

2

2.1 System overview

Introduction

A continuous communication down to the lowest field level ensures enhanced use of the functions and performance capability of sensors and actuators. Enhanced use of sensors and actuators allows you to operate your machines and plants more productively.

No data other than the actual process value can be exchanged via the standard interfaces (digital, analog) used at the sensor/actuator level. Sensors and actuators with integrated intelligence are now used for increasingly complex functions and require a communication interface tailored to these requirements.

Definition

IO-Link is an innovative, point-to-point communication interface for the sensor/actuator area that is specified in IEC 61131-9.

IO-Link consists of the following system components:

- IO-Link master
- IO-Link device
- Unshielded 3-wire or 5-wire standard cable
- Engineering tool for configuring and assigning parameters of IO-Link

2.2 What are ET 200AL IO-Link I/O modules?

SIMATIC ET 200AL IO-Link I/O modules

SIMATIC ET 200AL IO-Link I/O modules belong to the SIMATIC ET 200AL distributed I/O system.

You can operate the IO-Link I/O modules on any IO-Link master with IP20 or IP67 degree of protection.

Customer benefits

Easy to use

- I/O modules can be connected to any IO-Link master
- CAx compliant labeling of all interfaces
- Communication and power supply via a single cable
- Standardized IO-Link connector technology (M12)

Compact design

- 30 mm housing width for limited space conditions or
  45 mm housing width for high channel count
- High degree of protection IP65/IP67
- Suitable for temperatures from -30 °C to +55 °C and accelerations up to 10 g



Communication standards

- IO-Link according to specification V1.1
- Supports the "General Profile" of IO-Link

Flexible mounting

- Easy mounting in all mounting positions - even in small spaces
- Point-to-point connection of spatially separated modules using an IO-Link cable
- Line topology (PROFIBUS, PROFINET IO,
  ET-Connection) is supplemented with an IO-Link star topology
- Connection of sensors and actuators with M8 and M12 connection technology

Figure 2-1 Benefits of the ET 200AL IO-Link

Area of application

The SIMATIC ET 200AL distributed I/O system is especially well-suited for the following application areas:

- Where space is limited
- Moving applications
- Assembly and handling technology

Thanks to its scalable construction, you have the option to precisely customize its configuration to your on site needs.

The SIMATIC ET 200AL distributed I/O system is designed in IP65/IP67 degree of protection. The I/O modules are suited for distributed use indoors on a machine or assembly line.

You can adapt the cable routing optimally to the machine requirements. The combination of a line topology, such as PROFINET IO and ET connection, and the star topology of IO-Link make this easy to implement.

Configuration

The IO-Link I/O modules of the SIMATIC ET 200AL distributed I/O system are operated on any IO-Link master.
A cable with M12 plug-in connection is used for the communication and power supply.

2.3 Components

Components of the IO-Link I/O modules

The following table shows and explains the function of the components of the IO-Link I/O modules of the ET 200AL distributed I/O system.

Table 2-1 Components of the IO-Link I/O modules

Component	Function	View
IO-Link I/O modules	• The I/O modules form the interface to the process • Recording and controlling the current process status via the connected sensors and actuators	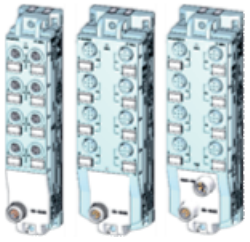
Identification labels	• The identification labels come with the module and can be machine printed • Can be ordered separately	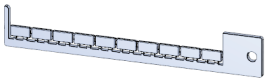
M12-A connecting cable	• Connection of IO-Link I/O module to the master • Connection to sensors and actuators	
Power connecting cable M12-L	• Connection of additional load voltage	
Sealing cap M8 and M12	• Seal for unused connections • IP degree of protection is maintained through use	
Y-cable	• Double connection of actuators or sensors to one socket • IP degree of protection class is maintained when two actuators or sensors are connected to one socket	

Application planning

3

3.1 Hardware configuration

Basic configuration with IO-Link I/O modules

Connect the IO-Link I/O module to an IO-Link port of the master with an M12-A coded plug.
The maximum cable length between an IO-Link device and an IO-Link master is 20 m.
Power is supplied to the IO-Link I/O modules via the IO-Link master.
You can connect one IO-Link I/O module per IO-Link port to an IO-Link master.
For I/O modules with high power demand, an M12-L power connector is available for an additional supply voltage.
You can find information on the maximum infeed current in the technical specifications of the modules in the respective equipment manuals or on the Internet (https://support.industry.siemens.com/cs/ww/en/view/109742667).

3.2 Configuration of IO-Link I/O modules

Each ET 200AL IO-Link I/O module has an M12 A-coded plug for connection to an IO-Link master.
When connecting the IO-Link I/O modules to an IP65/67 IO-Link master, pay attention to the required port class (Type A or Type B). You can find the technical specifications in the respective equipment manuals or on the Internet.

PROFINET IO

The figure shows an IO-Link configuration in combination with a PROFINET IO network. The line topology of PROFINET IO is supplemented with a star topology of IO-Link.

NOTE
Configuration variants
The IO-Link I/O modules can also be operated on an IO-Link master in other networks.

Connection examples

The following figure shows a connection example using an S7-1500 IO-Link master with IP20 degree of protection.

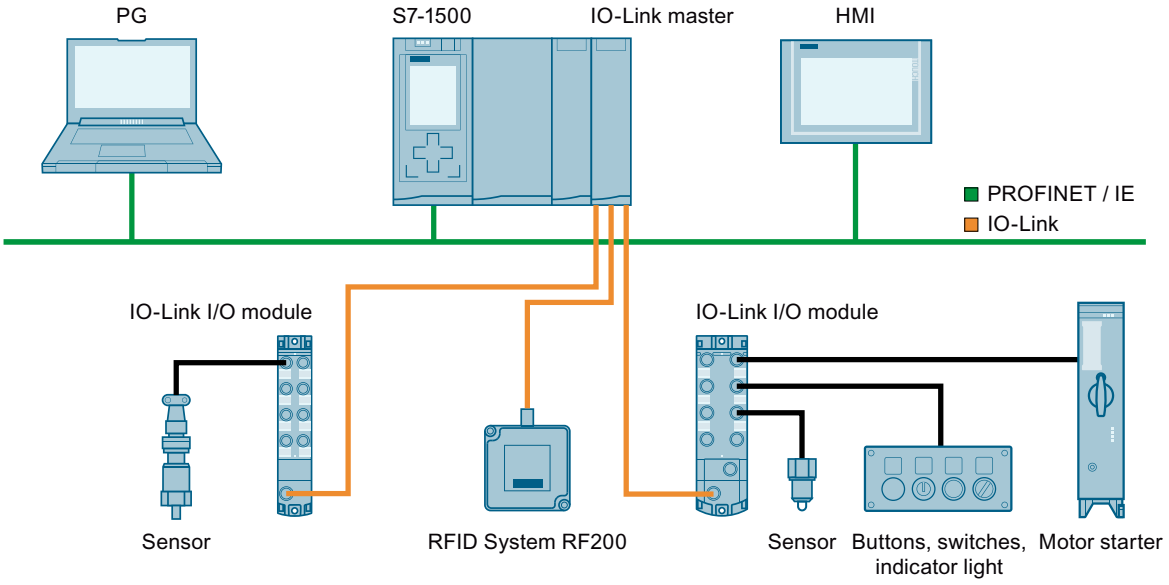

Figure 3-1 Configuration with IP20 IO-Link master

The following figure shows a connection example on an ET 200ecoPN IO-Link master with IP65/67 degree of protection.

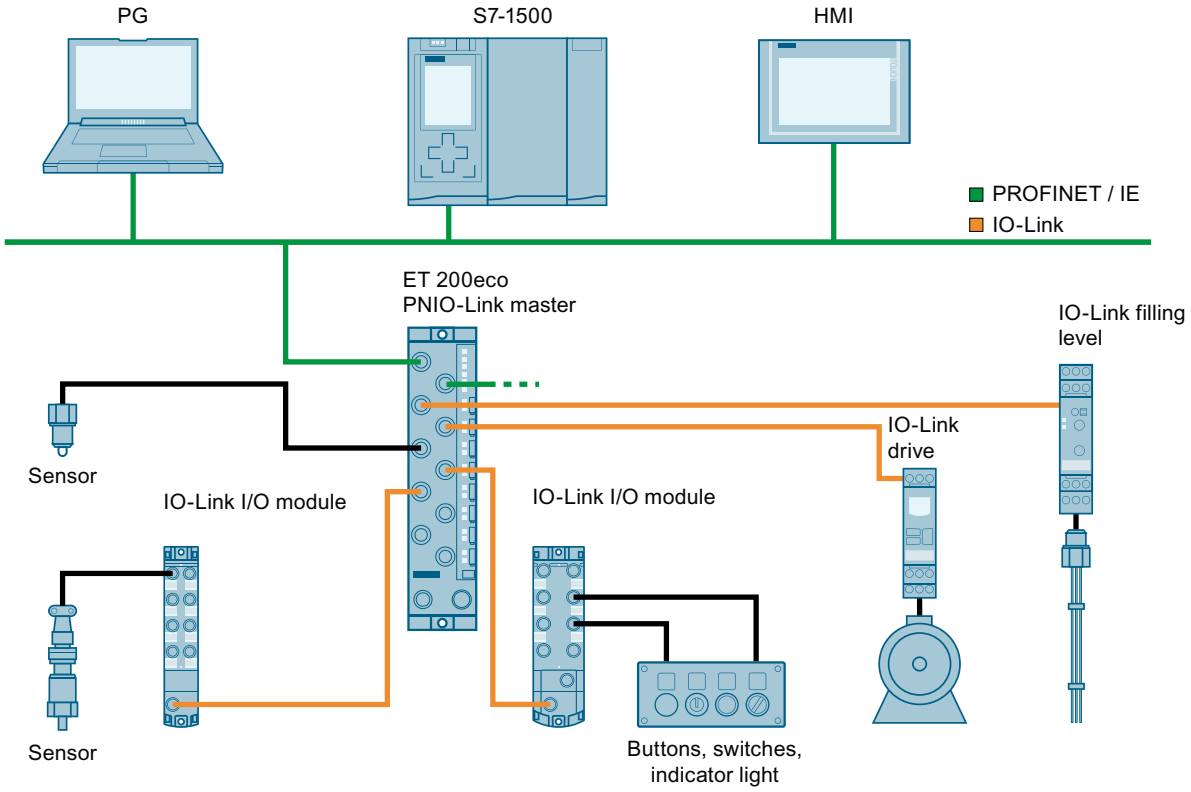

Figure 3-2 Configuration with IP65/67 IO-Link master

Mounting

4

4.1 Basics

Introduction

The IO-Link I/O modules are designed for IP65/IP67 degree of protection. This means that you can mount the modules directly in your plant.

Mounting position

You can mount the IO-Link I/O modules in any mounting position.

Minimum clearances

Maintain a minimum clearance of 2 cm from adjacent modules or other devices when mounting. The minimum clearance makes it easier to install the connectors.

Mounting rules

When mounting the modules, you do not need to following any special rules.

NOTE

Mounting of the modules

Only mount the IO-Link I/O module when the supply voltages are disconnected.

4.2 Mounting modules

Introduction

The IO-Link I/O modules are designed for mounting on a level, stable surface.
Thanks to the axisymmetrical drill holes in the modules, you have the option to fasten the modules on an aluminum profile using tee nuts.

The following images shows the aluminum profile on which you can mount the modules.

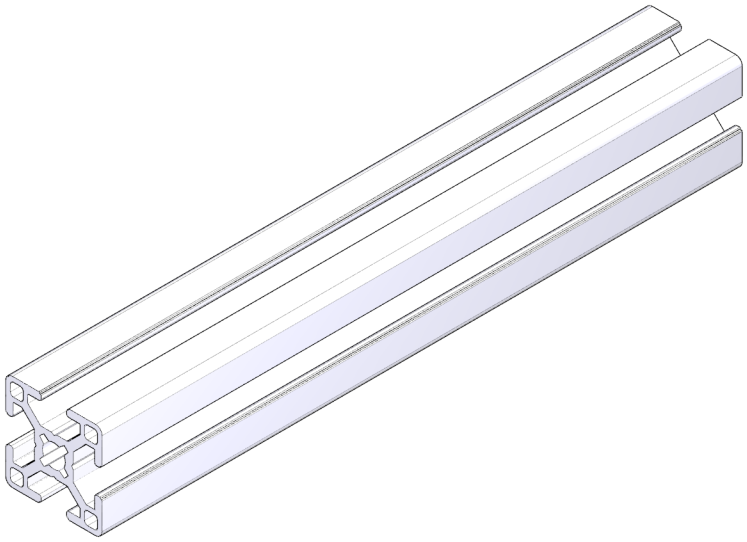

Figure 4-1 Aluminum profile

Required tool

For installation, you need a screwdriver or an Allen wrench.

Required screws

The following table shows and explains the screw types required to mount the modules.

Table 4-1 Recommended screws

Screw type	Explanation
Socket head cap screw M4 according to DIN EN ISO 1207 / DIN EN ISO 1580	The screw length must be at least 30 mm. If you need washers, use DIN EN ISO 7089/DIN EN ISO 7090 washers.
Hexagon socket head cap screw M4 according to DIN EN ISO 4762	

Drill holes of the modules

All IO-Link I/O modules have a uniform drill pattern.

- All module housings are axisymmetrical.
- The distance between the top and bottom drill hole is identical for all modules.

Mounting 30 mm wide I/O modules (front or side)

Watch video sequence (https://support.industry.siemens.com/cs/ww/en/view/95886672)
The 30 mm I/O modules have a fastening point at the top and bottom. The 30 mm wide I/O modules can also be side-fastened. When fastening them at the side, you must use the supplied spacers.

Follow the steps below to mount a 30 mm wide I/O module:

1. Drill two fastening holes with 4.5 mm diameter spaced 149.6 mm apart.
2. Use the supplied spacers for side fastening of the I/O module on the top and bottom (on one side adjacent to the fastening surface).
3. Fasten the I/O module with the screws to both fastening points (tightening torque 1.2 Nm).

The figure below shows the dimensions for fastening the 30 mm wide I/O modules using the example of the IO-Link I/O module DIQ 4+DQ 4x24VDC/0.5A 8xM8.

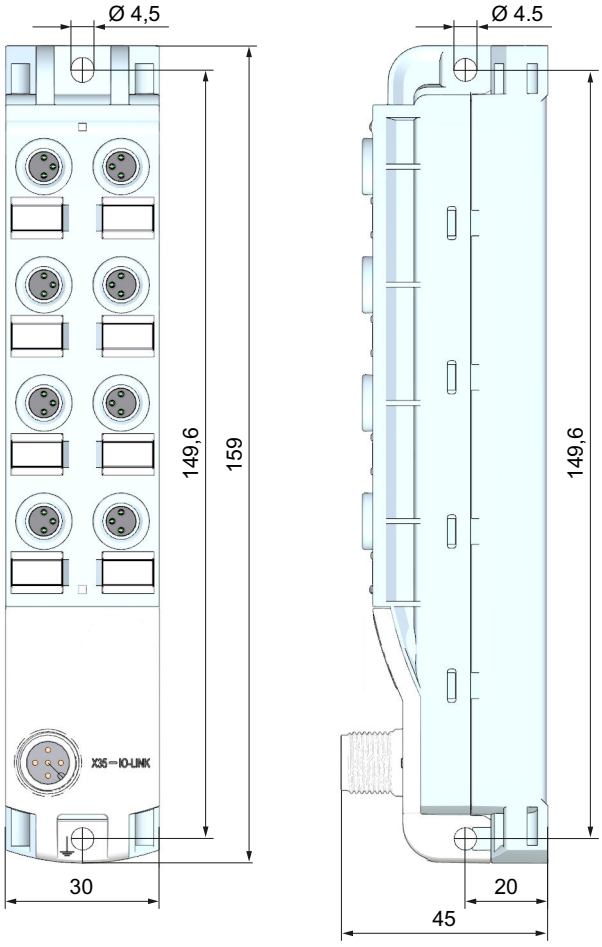

Figure 4-2 Dimensions for mounting 30 mm wide I/O modules

Mounting 45 mm I/O modules (front mounting)

Watch video sequence (https://support.industry.siemens.com/cs/ww/en/view/95886672)

The 45 mm wide I/O modules have a fastening point at the top and bottom.

Follow the steps below to mount a 45 mm wide I/O module:

1. Drill two fastening holes with 4.5 mm diameter spaced 149.6 mm apart.
2. Fasten the I/O module with the screws to both fastening points (tightening torque 1.2 Nm).

The figure below shows the dimensions for fastening using the example of the IO-Link I/O module DI 8x24VDC M12-L 8xM12.

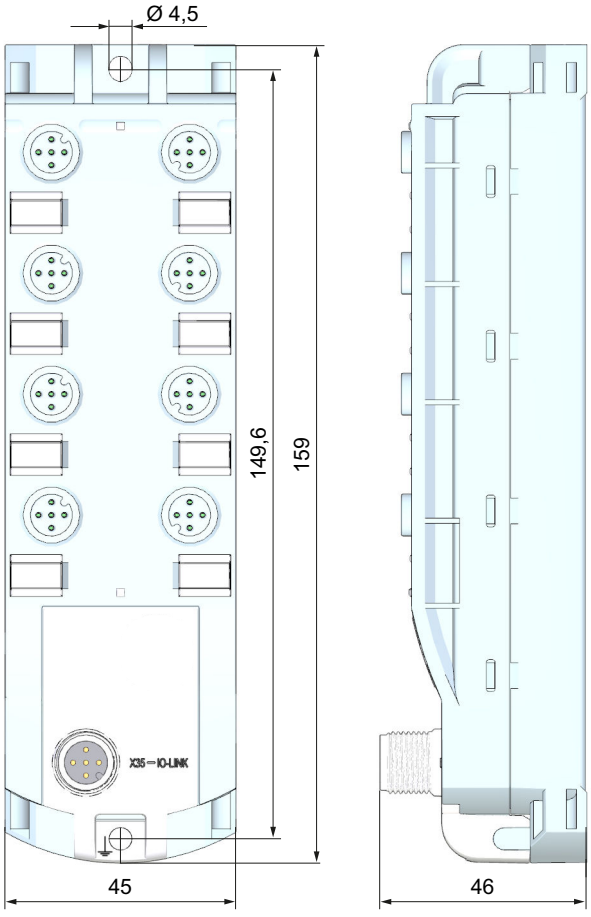

Figure 4-3 Dimensions for mounting 45 mm I/O modules

Fastening for cable ties

All IO-Link I/O modules have integrated fastening points for cable ties. The fastening points are found on all four corners of the modules.

The figure below shows the top left fastening point for 2.5 mm cable ties for fastening the cables.

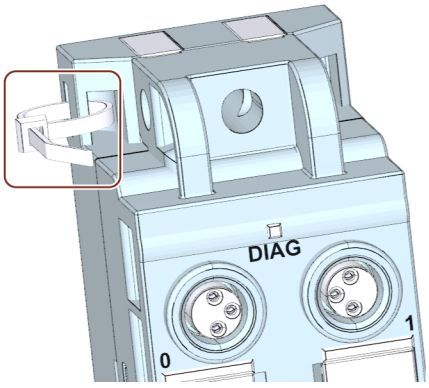

Figure 4-4 Top left fastening point for cable ties

Connecting

5

5.1 Rules and regulations for operation

Introduction

Depending on the area of application, the IO-Link I/O modules, as an integral component of a system, must adhere to special rules.

This section gives an overview of the most important rules you must follow when integrating the IO-Link I/O modules in a plant or system.

Specific application

Observe the safety and accident prevention regulations that are applicable to specific applications, for example, the Machinery Directive.

EMERGENCY-STOP device

Emergency Stop devices according to IEC 60204-1 (corresponds to DIN VDE 0113-1) must remain effective in all operating modes of the system.

Excluding hazardous system conditions

Hazardous operating states must not occur in any situation, but especially:

- When the system restarts after a voltage dip or power outage
- When the IO-Link I/O modules start up after interruption of the IO-Link communication

If necessary, force an EMERGENCY STOP.

An uncontrolled or undefined startup is not permitted after the "EMERGENCY STOP" is unlocked.

Cables and wires

Note that the utilized cables (including plugs) are approved for a continuous operating temperature of 30 °C above the operation temperature of the IO-Link I/O modules.

The cables and wires used must be rated for at least the supply voltage used.

External fuses/switches

External fuses and switches must be installed so that they meet the standards for cable and device protection applicable to your application.

Line voltage

For the line voltage, note the following:

- For stationary plants or systems without an all-pole line disconnector, there must be a disconnector unit (all-pole) fitted in the building installation.
- For load current supplies, the configured rated voltage range must correspond to the local line voltage.
- For all electric circuits of the IO-Link I/O modules, the fluctuation/deviation of the supply voltage and load voltage from the rated value must be within the permitted tolerance.

You can find more information in the section Specifications for insulation, protection class, degree of protection and rated voltage (Page 57).

24 V supply

For the 24 V supply, note the following:

- For buildings:
  If there is a danger due to overvoltages, you must take lightning protection measures for external lightning protection (e.g. lighting protection elements).
- With 24 V DC supply lines and signal lines:
  If there is a danger due to overvoltages, you must take lightning protection measures for internal lightning protection (e.g. lightning protection elements. You will find additional information in the Designing interference-free controllers (https://support.industry.siemens.com/cs/ww/en/view/59193566) function manual).
- For 24 V DC supply:
  Ensure that there is an electrical protective separation of extra-low voltage (SELV/PELV) according to IEC 61010-2-201 or IEC 60950-1.
  1L+ is supplied via the IO-Link master. Observe the requirements of the IO-Link master used.
  2L+ is connected via port Type B or the M12-L power connector. Protect 2L+ with a UL- or IEC-approved fuse (tripping characteristic type B or C). This fuse must conform to the cable cross-section and must not exceed the maximum total current of the IO-Link I/O module. Module-specific specifications can be found in the equipment manuals and on the Internet.

NOTE

Wet environment

If you use IO-Link I/O modules in a wet environment, other limits apply for SELV/PELV.

Protection against outside electrical influences

Below is a description of what you must pay attention to in terms of protection against electrical impacts and/or faults:

- To protect against electromagnetic interference, connect the I/O devices to functional ground.
- Ensure correct installation and routing of the supply, signal and IO-Link cables.
- Configure the plant/system in such a way that an error does not result in undefined states.
  - Line/wire break
  - Cross-circuit in the cable

Reference

Additional information can be found in the function manual Designing interference-free controllers (https://support.industry.siemens.com/cs/ww/en/view/59193566).

5.2 Operation of the IO-Link I/O modules on a grounded/ungrounded infeed

Introduction

Information on the overall configuration of the IO-Link I/O modules on a grounded infeed (TN-S system) is provided below. Statements regarding the TN-S system relate to the upstream 24 V DC power supply that is connected to the TN-S system.
Together, the IO-Link I/O modules and the IO-Link master form a unit. The following items must be noted for the configuration.

- IO-Link voltage supply via IO-Link master port class A
- IO-Link voltage supply via IO-Link master port class B
- Voltage supply for modules with high power demand via the M12-L power connector

The specific subjects discussed are:

- Disconnecting devices, short-circuit and overload protection to IEC 60364 (corresponding to DIN VDE 0100) and IEC 60204 (corresponding to DIN VDE 0113)
- Load current supplies and load circuits
- Supply voltages of the IO-Link I/O modules

Grounded infeed

In grounded incoming supplies, the neutral conductor of the supply system is grounded. A ground fault between a live conductor and ground or a grounded system component causes the protective devices to trip.

Supply voltages

Provide the IO-Link master with an SELV/PELV 1L+ supply voltage.
The SELV/PELV 2L+ load voltage is supplied via the M12-A connector with port class B or via

the M12-L power connector. The SELV/PELV 2L+ load voltage can be switched depending on the application.

- IO-Link 1L+ supply voltage (non-switched) via M12-A connector port class A.
- IO-Link 2L+ load voltage (switched) via M12-A connector port class B or M12-L power connector.

Safe electrical isolation (SELV/PELV)

Power packs/power supply modules with safe electrical isolation SELV/PELV are required for operation of the IO-Link I/O modules. These power packs/power supply modules must comply with IEC 61010-2-201.

The wiring of SELV/PELV circuits must be separated from the wiring of non-SELV/PELV circuits. Or the insulation of all conductors must be rated for the higher voltage.

NOTICE
Operation in damp / wet environments When operating in a damp / wet environment, different voltage limits apply for SELV/PELV according to IEC 61010-2-201.

Configuring IO-Link I/O modules with grounded reference potential

In the configuration of IO-Link I/O modules with grounded reference potential, any interference currents that occur are discharged to functional ground. The connections must be externally connected. Establish a connection between 1M or 2M and functional ground.

Configuring IO-Link I/O modules with ungrounded reference potential

In the configuration of IO-Link I/O modules with ungrounded reference potential, any interference currents that occur are discharged to functional ground via an internal RC network. You do not need an external connection between 1M, 2M and functional ground.

Overall configuration of IO-Link I/O modules

The figure below shows the overall electrical configuration using the example of an IO-Link I/O module with port class A on an IO-Link master with port class A.

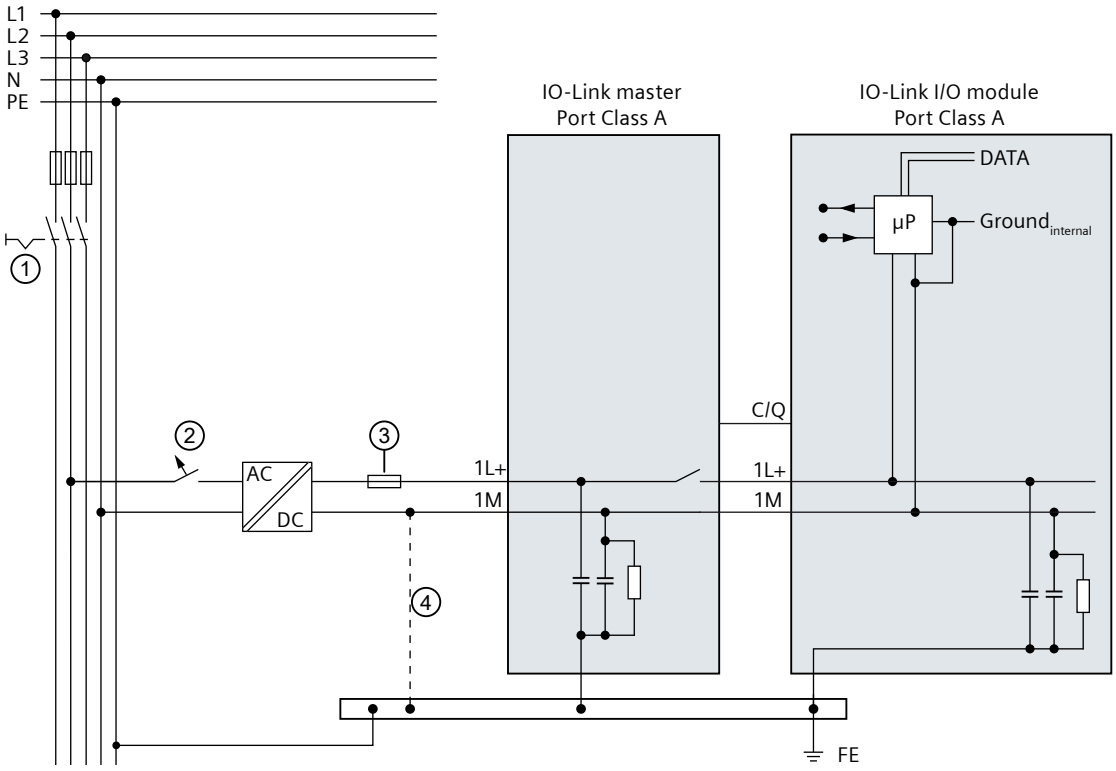

① Main switch

② Short-circuit and overvoltage protection

③ Fuses for cable protection

④ In the configuration of the IO-Link system with ungrounded reference potential, the connection between 1M and functional ground is omitted.

Figure 5-1 Electrical configuration of IO-Link I/O module with port class A

The figure below shows the overall electrical configuration using the example of an IO-Link I/O module with port class A or B on an IO-Link master with port class A.

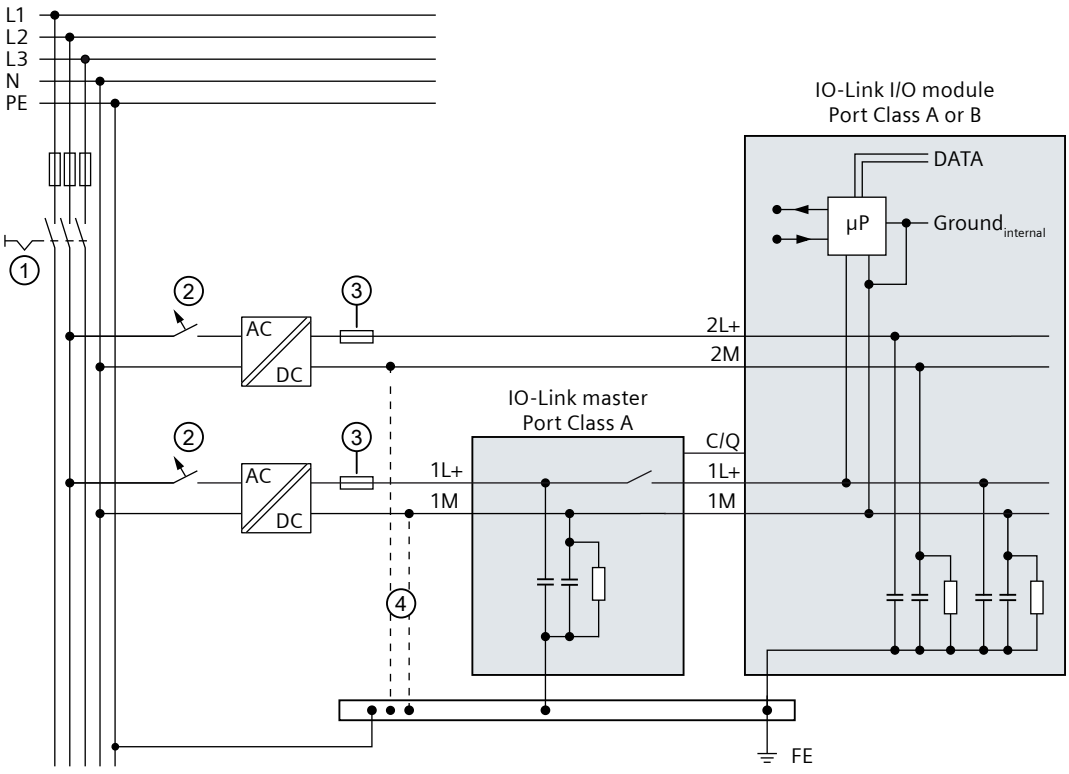

① Main switch

② Short-circuit and overvoltage protection

③ Fuses for cable protection

④ In the configuration of the IO-Link system with ungrounded reference potential, the connection between 1M, 2M and functional ground is omitted.

Figure 5-2 Electrical configuration of an IO-Link I/O module with port class A or B on an IO-Link master with port class A.

The figure below shows the overall electrical configuration using the example of an IO-Link I/O module with port class B on an IO-Link master with port class B.

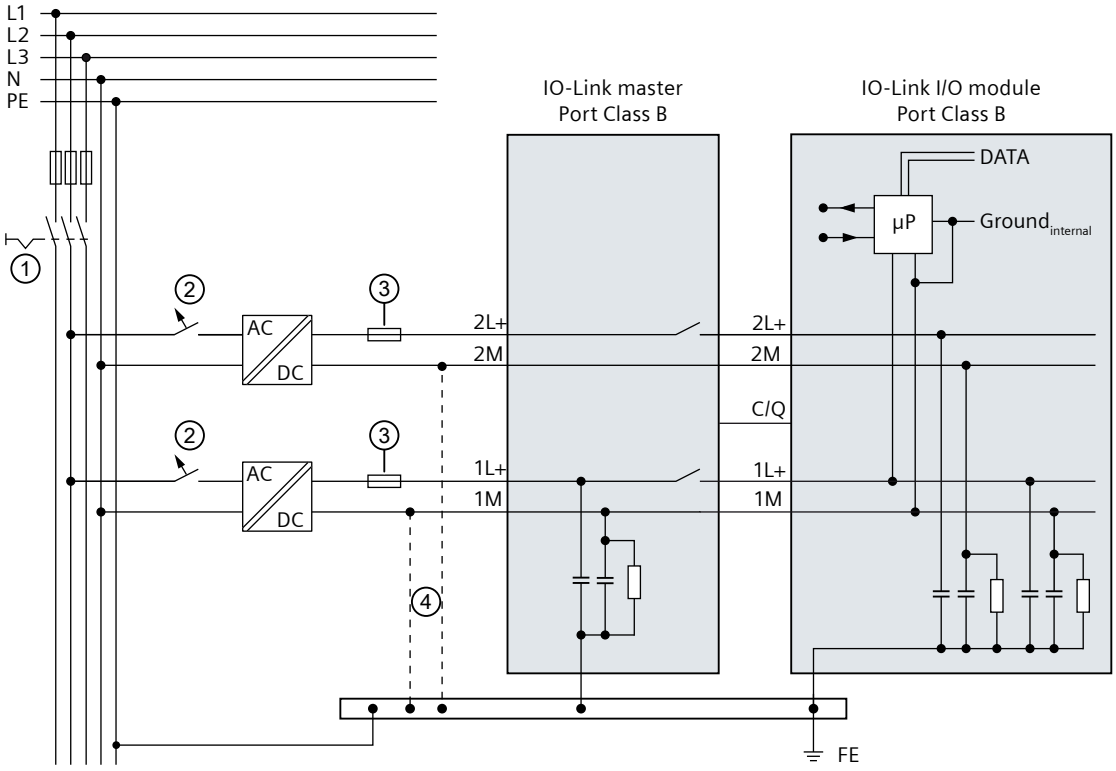

① Main switch

② Short-circuit and overvoltage protection

③ Fuses for cable protection

④ In the configuration of the IO-Link system with ungrounded reference potential, the connection between 1M, 2M and functional ground is omitted.

Figure 5-3 Electrical configuration of an IO-Link I/O module with port class B on an IO-Link master with port class B.

Components and protective measures

Various components and protective measures are stipulated for setting up a complete plant. The types of components and the degree to which the protective measures are mandatory depend on the IEC regulation that applies to your plant setup.

The following table shows the components of the electrical configuration with reference to the previous figure and compares the IEC regulations.

Table 5-1 Components of electrical configuration

	Reference to illustration	**IEC 60364 (DIN VDE 0100)**	**IEC 60204 (DIN VDE 0113)**
Disconnection element for controller, sensors, and actuators	①	... Part 460: Main switch	... Part 1: Disconnectors
Short-circuit / overload protection	②	.... Part 725: Single-pole protection of circuits	... Part 1: Single-pole protection of grounded secondary circuit
Cable protection	③	... Part 430: Protection of cables and wires against overcurrent Protect all incoming supply cables with a circuit breaker.	... Part 1: Overcurrent protection

Insulation monitoring

You must provide insulation monitoring in the following cases:

- In the configuration of the IO-Link system with ungrounded reference potential
- When hazardous system conditions may occur due to errors

5.3 Electrical configuration of the IO-Link I/O modules

Electrical isolation

In the electrical configuration of the IO-Link I/O modules, there is electrical isolation between:

- IO-Link 1L+: Non-switched supply voltage (electronics/sensor/load supply):
  Electrically isolated from 2L+ (load voltage supply)
- 2L+ port class B or M12-L power connector: Switched supply voltage (load voltage supply):
  Electrically isolated from all other circuit components
  Can be switched off without affecting the IO-Link 1L+

Connection of a digital output with a digital input

NOTICE
Pay attention to the potential group When a digital output is connected to a digital input, pay attention to the potential groups. Depending on the configuration, 1M and 2M may then be connected, resulting in elimination of the electrical isolation between 1L+ and 2L+. The possible compensating currents can destroy the digital module.

⚠ WARNING

Note potential groups for safety-related shutdown

When a digital output is connected to a digital input, pay attention to the potential groups. Depending on the configuration, 1M and 2M can be connected through this, which leads to cancellation of the electrical isolation between 1L+ and 2L+.
The safety-related shutdown is not permitted if the electrical isolation is canceled.

Cable protection

According to DIN VDE 0100, cable protection is required. Therefore, you must always protect the supply lines externally.
Protect the 24 V DC supply lines against short-circuits and overloads.
Select a protective device that meets the following criteria:

- Suitable for 24 V DC supply voltage
- Suitable for cable cross-section and type of installation
- Suitable for other conditions, such as temperature

Power supply of the configuration

Up to two voltage groups are available for the ET 200AL distributed I/O system.

- 1L+ via IO-Link (supply voltage / non-switched)
- 2L+ via port class B or M12-L power connector (load voltage / switched)

NOTE

Connecting and disconnecting of 1L+ IO-Link, 2L+ via port class B or M12-L power connector

Unlike the load voltage 2L+ via port class B or the M12-L power connector, the connection and disconnection of the supply voltage 1L+ during operation results in a module restart.

5.4 Connecting IO-Link I/O modules to functional ground

Introduction

You must connect the IO-Link I/O modules to functional ground.

What is functional ground?

All IO-Link I/O modules have a functional ground connection. This connection is used to suppress interference sensitivity, but not for protection purposes. With the functional ground connection, you establish an electrical connection to a point of your system or a shield. Electromagnetic interferences are discharged directly to ground via this connection. By

discharging the electromagnetic interference, the interference immunity of the entire module is increased.

The figure below shows the symbol that is used to mark the functional ground connection on the IO-Link I/O modules.

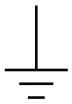

Figure 5-4 Functional ground

5.4.1 Mounting IO-Link I/O modules on a conductive surface

Requirement

Conductive surface for mounting of the module

Required tool

To connect to functional ground, you need the following tool:

- Screwdriver or hexagon socket size 3

Required accessories:

To connect to functional ground, you need the following accessories:

- 2 x M4 fastening screws

Mounting

To connect the IO-Link I/O modules to functional ground in the case of a conductive mounting surface, proceed as follows:

1. Drill two fastening holes. The dimensions of the module can be found in the section Dimension drawings (Page 64).
2. Screw the module with the M4 fastening screws using a torque of 1.2 Nm.

NOTE

Grounding in the case of a conductive mounting surface

When you mount an IO-Link I/O module on a conductive, grounded surface, the lower fastening screw establishes a conductive connection to the ground potential.

Ensure that there is a low-impedance connection between the module and conductive surface as well as between the conductive surface and functional ground.

Reference

You will find more information on installing the modules in the section Mounting modules (Page 20).

5.4.2 Mounting IO-Link I/O modules on a non-conductive surface

Requirement

Non-conductive surface for mounting of the module

Required tool

To connect to functional ground, you need the following tool:

- Screwdriver or hexagon socket size 3
- Stripping tool
- Crimp tool

Required accessories:

To connect to functional ground in the case of a non-conductive mounting surface, you need the following accessories:

- 2 x 4 mm fixing screws
- Cable lug, suitable for 4 mm screws
- Grounding cable (braided copper cable) with a minimum cross section of 4 mm^2

Mounting

To connect IO-Link I/O modules to functional ground, proceed as follows:

1. Drill two fastening holes.
2. Strip the grounding cable.
3. Fasten the cable lug to the grounding cable.
4. Screw the module and the cable lug with the 4 mm fastening screws using a torque of 1.2 Nm.

The figure below shows how to connect the functional ground.

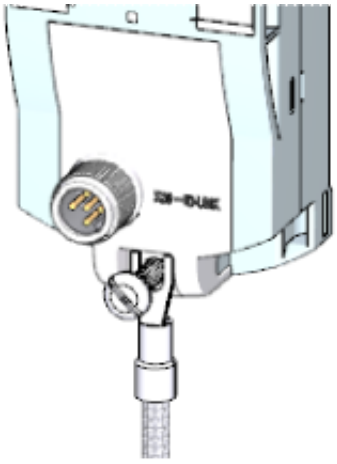

Figure 5-5 Connecting the functional ground

NOTE
Grounding in the case of a non-conductive mounting surface
Make sure there is a low-impedance connection between the module and functional ground.

Reference

You will find more information on installing the modules in the section Mounting modules (Page 20).

5.5 Wiring

Connection

Connect all cables to the front side of the modules:

- IO-Link to the 5-pole M12 connector (A-coded)
- Signal lines to the 3-pole M8 sockets or 4/5-pole M12 sockets (A-coded)
- Additional load voltage to the 5-pole M12 plug (L-coded)

Requirement

Wire the modules with the supply voltage off.

Required tool

If you are not using pre-assembled cables, you need the following tool:

- Stripping tool
- Screwdriver to wire the connection plugs

Accessories required for the connection of IO-Link

You need the following accessories:

- Cables
  - Pre-assembled cable M12, 4-pole or 5-pole, or
  - Flexible 3, 4 or 5-core copper cable (core cross-section: 0.25 to 0.5 mm^2)
- 5-pole M12-A coded connecting socket

Accessories required for the connection of additional load voltage

You need the following accessories:

- Pre-assembled power cable M12-L coded, 4-pole or 5-pole
- Flexible 4-core or 5-core copper cable (core cross-section: 0.5 to 2.5 mm^2)
- 4-pole or 5-pole M12-L coded socket

Connecting M8 connectors

To connect M8 connectors, proceed as follows:

1. Insert the plug into the respective round socket on the module.
   Ensure the correct alignment between plug and socket.
2. Tighten the connector using the knurled screw with a torque of 0.4 Nm.

The figure below shows the connection of the M8 plugs, using the example of the IO-Link digital input module DI 8x24VDC 8xM8..

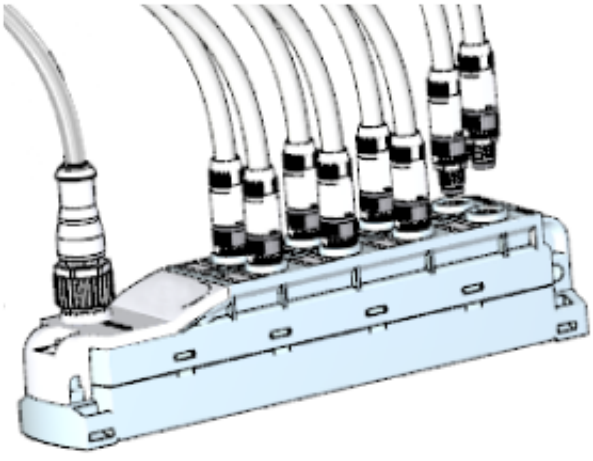

Figure 5-6 Connecting M8 connectors

Connecting M12 connectors

To connect M12 connectors, proceed as follows:

1. Insert the plug into the respective round socket on the module.
   Ensure the correct alignment between plug and socket (groove and spring).
2. Tighten the connector using the knurled screw with a torque of 1 Nm.

The figure below shows the connection of the M12 plugs, using the example of the IO-Link digital input module DI 16x24VDC 8xM12..

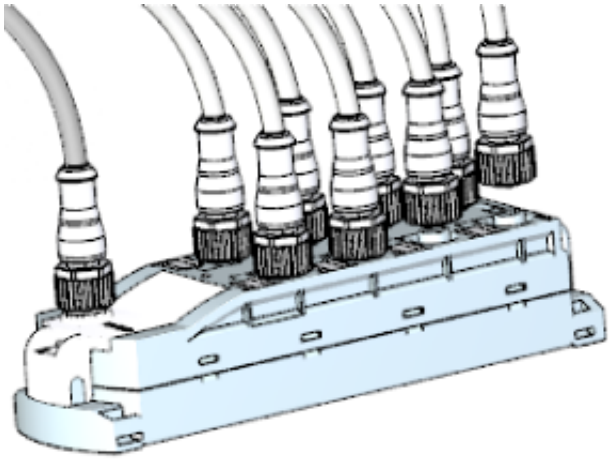

Figure 5-7 Connecting M12 connectors

Pin assignment of the sockets

The pin assignment of the sockets can be found in the equipment manuals of the I/O modules (https://support.industry.siemens.com/cs/ww/en/ps/14247/man) in the section on pin assignment and on the side surface of the module.

Y-cable

The Y-cable allows you to connect two actuators or sensors to the inputs or outputs.
The use of a Y-cable is recommended in particular if two channels are occupied per socket of an I/O module. The Y-cable distributes the channels to two circular connectors.

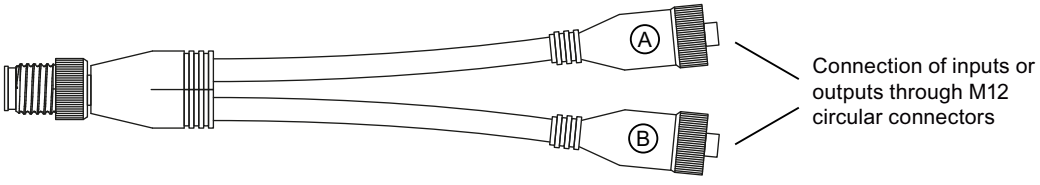

The figure below shows the wiring of the Y-cable.

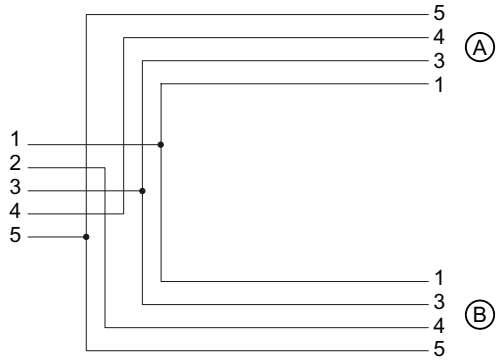

Figure 5-8 Wiring of the Y-cable

Sealing of unused sockets

To ensure IP65 or IP67 degree of protection, seal off all unused sockets with sealing caps.

Article numbers for accessories/spare parts.

You will find the article numbers in the Appendix in section Accessories/spare parts (Page 65).

See also

Interface modules (https://support.industry.siemens.com/cs/ww/en/ps/14246/man)

5.6 Marking of IO-Link I/O modules

5.6.1 Factory markings

Introduction

For better orientation, the IO-Link I/O modules are furnished with various markings that support you when configuring and connecting the modules.

Marking of the interfaces

The interfaces of the modules are factory-labeled.
The table below shows the labeling of the interfaces.

Table 5-2 Interface labeling

interface	Labeling
IO-Link	X35 (IO-Link)
I/O input and output interfaces	X10 ... X17

interface	Labeling
Additional power supply	X80 (DC24V)

Pin assignment

The pin assignments of the various interfaces are lasered at the factory, on the side of every module.

5.6.2 Optional markings

Introduction

In addition to the factory markings, there are also optional possibilities for labeling or marking interfaces and modules on the IO-Link I/O modules.

Identification label

The identification labels come with each IO-Link I/O module as strips and can be machine-printed. A strip has 10 identification labels measuring 10 x 5 mm in the color RAL9016. The identification labels can be inserted into every module at the points provided. The identification labels are used for channel and module labeling.

The figure below shows all points where you can use the identification labels using the example of the IO-Link digital input module module DI 8x24VDC 8xM8.

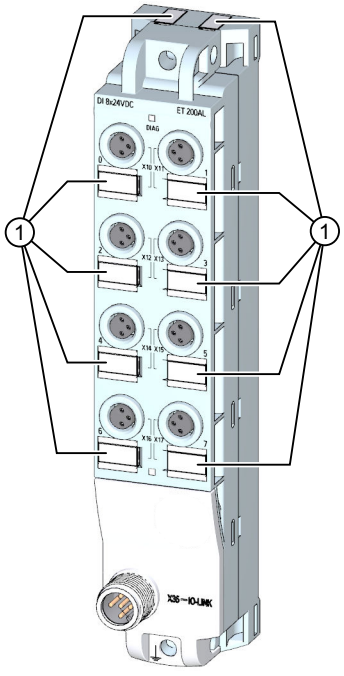

① Identification labels

Figure 5-9 Optional marking

5.6.3 Mounting identification labels

Introduction

This section describes how to mount or remove identification labels.

Required tools

You need a screwdriver with 3 mm blade width (only to remove identification labels).

Mounting procedure

To mount an identification label, proceed as follows:

1. Print the identification label using commercially available marking systems.
2. Press the identification label out of its holder.
3. Stick the identification labels into the cutouts provided, as shown in the figure Optional marking (Page 40).

Mounting the identification labels is the same for all modules.

Removal procedure

To remove an identification label, proceed as follows:

1. Carefully use a screwdriver to pull out the identification label.

Removing identification labels is the same for all modules.

Configuring

6

6.1 Requirements

Introduction

Configuration and parameter assignment of the IO-Link I/O modules is carried out with:

- STEP 7 (TIA Portal)
- S7-PCT
- IO-Link configuration software of the IO-Link master manufacturer

Requirements

Observe the software requirements of the configuration software of the utilized IO-Link master.

Table 6-1 Hardware requirements

Hardware	Requirements
IO-Link master	As of IO-Link V1.1

6.2 IODD and Port Configuration Tool - S7-PCT

Device description IODD

An electronic device description, the IODD file (IO Device Description), is available for each device. The IODD provides a wealth of information for system integration:

- Communication properties
- Device parameters with value range and default value
- Identification, process and diagnostic data
- Device data
- Text description
- Image of the device
- Manufacturer logo

The structure of the IODD is identical for all devices from all manufacturers. The structure of the IODD is always represented in the same manner by the IO-Link configuration tools of the master manufacturer (for Siemens, S7-PCT). This ensures that the handling is the same for all IO-Link devices regardless of the manufacturer.

IODDfinder

The IODDfinder is a cross-vendor, central IO-Link database.
This database provides you with the latest IODDs of the device manufacturers and offers an information and download platform.
The IODD finder is available on the Internet (https://ioddfinder.io-link.com).

IO-Link configuration tool

Configuration tools are required to configure the entire IO-Link system. The IO-Link configuration tools of the master manufacturers are able to read IODDs.

The main tasks of the IO-Link configuration tool include:

- Assignment of devices to the master ports
- Address assignment of the ports within the address area of the master
- Parameter assignment of the IO-Link devices

Diagnostics can also be carried out on the connected devices.

This means the IO-Link configuration tool supports the transparent representation of the IO-Link system down to field level.

Siemens provides S7-PCT for engineering of the IO-Link system.

You can find the relevant device description file, software and function manuals in SIOS. (https://support.industry.siemens.com/cs/ww/en/view/109737170)

S7-PCT with IODD of an IO-Link I/O module

The following figure shows a section from S7-PCT with IODD of an IO-Link I/O module and the device information contained therein.

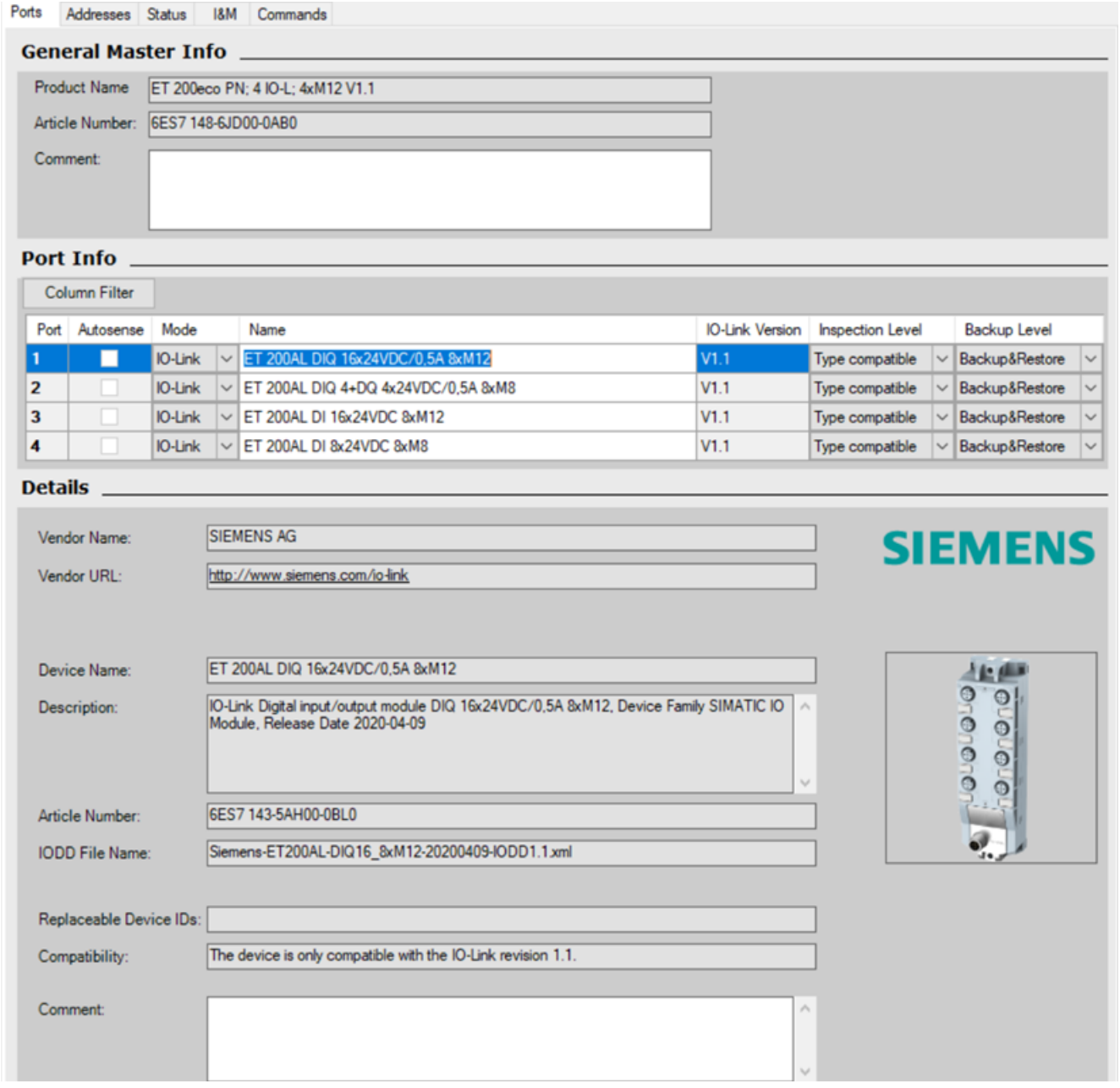

Figure 6-1 S7-PCT with IODD of a device and the device information contained therein

Commissioning

7

7.1 Startup of the IO-Link I/O module

Principle of operation

The figure below shows the startup of an IO-Link I/O module on an IO-Link Master schematically as a flow chart.

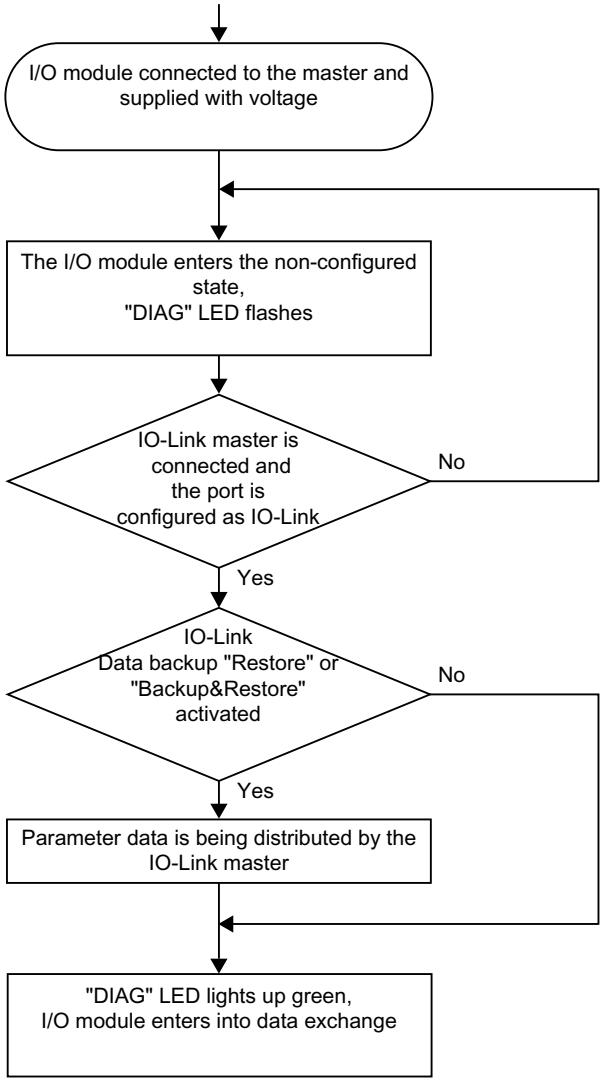

Figure 7-1 Startup of an ET 200AL IO-Link I/O module

Maintenance

8

8.1 Replacing modules

Replacing IO-Link I/O modules

The replacement of a module is not permitted during ongoing operation.

⚠ WARNING
Property damage can occur If you remove/insert modules while the power is connected, this can lead to undefined states in your system. The IO-Link I/O module may be damaged as a result. Only remove or replace modules when the power is disconnected. Always comply with the required standards and safety guidelines when configuring a system.

If you use the restore function of the master, the master automatically provides the saved parameters to the new module after module replacement. You have the following setting options for module replacement:

- "Backup&Restore"
  You have set the master port to "Backup&Restore". The new module behaves like the replaced module because the master has saved the last parameter change using the backup function.
- "Restore"
  You have set the master port to "Restore". The new module applies the parameter settings that were saved in the master at the time of the last back-up.

Procedure

To replace an IO-Link I/O module, follow these steps:

1. Ensure that no current is flowing via the outputs.
2. Completely disconnect all cables connected to the IO-Link I/O module.
3. Completely remove the fixing screws of the module
4. Replace the IO-Link I/O module.

   NOTE
   "New" IO-Link I/O module
   The removed IO-Link I/O module may only be replaced by a module of the same type.

5. Fasten the IO-Link I/O module with the screws with a torque of 1.2 Nm.

6. Connect all cables.
7. Turn the supply voltage on.

WARNING

Observe the device number of the modules

If you mix up the IO-Link I/O modules when connecting them, this can cause personal injury and property damage.

We recommend that you clearly label the IO-Link I/O modules with the device number.

The figure below shows a recommendation for the marking of the IO-Link I/O modules with the device number.

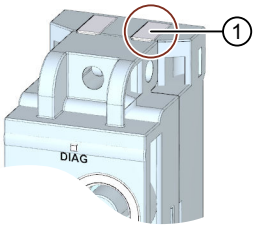

① Recommendation for the marking of device numbers

Figure 8-1 Device number

Result

The IO-Link I/O module that was out of service starts up again automatically. When data backup is set, the IO-Link master loads the parameter settings to the module.

8.2 Firmware update

Introduction

During operation, it can become necessary to update the firmware (e.g. for function extensions).

You use a firmware update to update the module firmware.

NOTE

STOP state during the update

When you perform a firmware update for an IO-Link I/O module, the module goes to STOP state during the update.

Requirement

To perform a FW update, you need an IO-Link master that supports the IO-Link FW update transfer mechanism.

Option for the firmware update

You have the option of performing a firmware update online via S7-PCT.

Reference

You will find additional information on the procedure in the "Help" > "Help topics" tab in S7-PCT. Enter "Firmware" in the search field and confirm with Enter.

8.3 Resetting a module

Introduction

With "Restore Factory Setting", the IO-Link I/O module is set to the delivery condition. All information that was saved internally on the IO-Link I/O module is deleted.

Options for resetting

You can reset the IO-Link I/O module in S7-PCT.
You have two different possibilities for this.

- "Application Reset"
- "Restore Factory Setting"

Result after "Application Reset"

The "Application Reset" command resets the application-specific parameters to the default values. The identification parameters of the module remain unchanged.
The command is not followed by a module restart or a communication interruption.

Result after "Restore Factory Setting"

The "Restore Factory Setting" command causes three different actions. The actions are dependent on the data backup setting on the IO-Link master.

- "None":
  The default parameters of the IO-Link I/O module are loaded. The IO-Link I/O module performs a restart.
- "Restore":
  The saved parameters at the time of the backup are loaded. The IO-Link I/O module performs a restart.
- "Backup&Restore":
  The parameters that were in the IO-Link I/O module before the "Restore Factory Setting" command are loaded. The IO-Link I/O module performs a restart.

Requirement

An online connection must exist to reset an IO-Link I/O device.

Procedure using S7-PCT

Connect the PG/PC to the PROFINET IO or PROFIBUS DP interface of the IO-Link master or to your system.
Make sure that an online connection to the IO-Link I/O module exists.

1. Select an IO-Link I/O module in the project tree.
2. Select the "Parameters" tab in the work area.
3. Under "Parameters" > "Parameter Data" > "System command", click on the desired button:

- "Application Reset"
- "Restore Factory Setting"

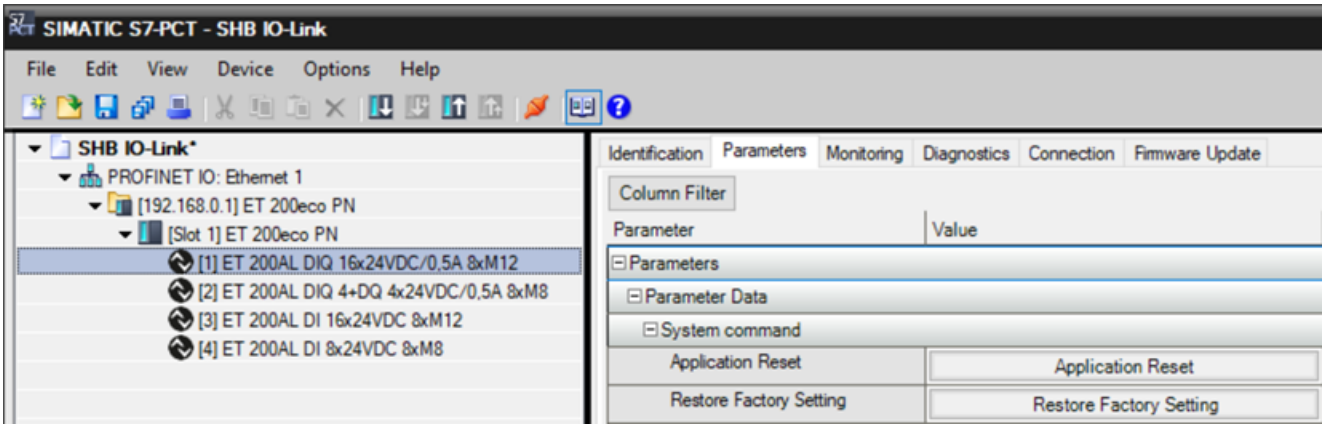

Figure 8-2 Resetting a module

Result: The IO-Link I/O module is reset.

Reference

You can find more information on the procedure in the S7-PCT online help.

8.4 Maintaining/cleaning the modules

Maintenance

The IO-Link I/O modules are maintenance-free.

NOTE
Repairs
Repairs to an IO-Link I/O module may only be carried out by the manufacturer.

Cleaning

When wired, the IO-Link I/O modules comply with degree of protection IP65/IP67 and do not require any cleaning.
If you want to clean the modules, use a dry or damp cloth. Please take care to comply with degree of protection IP65/67 when cleaning with liquids.

Technical specifications

9

Introduction

The technical specifications of the IO-Link I/O modules are found in this section:

- Standards and test values that the IO-Link I/O modules comply with and fulfill.
- Test criteria by which the IO-Link I/O modules have been tested

Technical specifications for the modules

The technical data of the individual modules can be found in the modules' manuals. If there are discrepancies between the statements in this document and the product manuals, the statements in the product manuals take priority.

See also

SIOS (https://support.industry.siemens.com)

9.1 Standards and authorizations

Currently valid markings and authorizations

NOTE

Specifications for the components of the IO-Link I/O modules

The markings and approvals currently valid are printed on the IO-Link I/O modules.

CE mark



The ET 200AL IO-Link I/O modules fulfill the requirements and protection targets of the following directives. They conform to the harmonized European standards (EN) that have been published for programmable logic controllers in the Official Journal of the European Community:

- 2014/30/EU "Electromagnetic Compatibility" (EMC directive)
- 2011/65/EU "Restriction of the use of certain hazardous substances in electrical and electronic equipment" (RoHS Directive)

The EU Declarations of Conformity are available for the authorities in charge and are kept at the following address:
SIEMENS AG
Digital Industries
DI FA TI COS TT
P.O. Box 1963
D-92209 Amberg, Germany
These files are also available for download on the Customer Support Internet pages, keyword "Declaration of Conformity".

UKCA marking



The ET 200AL IO-Link I/O modules comply with the designated British Standards (BS) for programmable logic controllers published in the official consolidated list of the British government. The ET 200AL IO-Link I/O modules fulfill the requirements and protection targets of the following regulations and related supplements:

- Electromagnetic Compatibility Regulations 2016 (EMC)
- Restriction of the Use of Certain Hazardous Substances in Electrical and Electronic Equipment Regulations 2012 (RoHS)
- Supply of Machinery (Safety) Regulations 2008 for ET 200AL safety components (fail-safe modules)

UK Declarations of Conformity for the respective authorities are available from:
Siemens AG
Digital Industries
Factory Automation
DI FA TI COS TT
P.O. Box 1963
D-92209 Amberg, Germany
The UK declarations of conformity are also available for download from the Siemens Industry Online Support website, under the keyword "Declaration of Conformity".

UL approval



Underwriters Laboratories Inc. in accordance with

- UL 61010-1 and UL 61010-2-201
- CSA C22.2 No. 61010-1 and CSA C22.2 No. 61010-2-201 (Process Control Equipment)

RCM Declaration of conformity for Australia/New Zealand



The ET 200AL IO-Link I/O modules meet the requirements of EN 61000-6-4:2007 Generic standards – Emission standard for industrial environments.

Korea Certificate



Please note that this device corresponds to limit class A with regard to the emission of radio interference. This device can be used in all areas, except residential areas.
이 기기는 업무용(A급) 전자파 적합기기로서 판매자 또는 사용자는 이 점을 주의하시기 바라며 가정 외의 지역에서 사용하는 것을 목적으로 합니다.

Marking for the Eurasian Customs Union



EAC (Eurasian Conformity)
Customs Union of Russia, Belarus and Kazakhstan
Declaration of conformity with the technical requirements of the Customs Union (TR CU)

IEC 61010-2-201

The ET 200AL distributed I/O system fulfills the requirements and criteria of IEC 61010-2-201.

IEC 61131-2

The ET 200AL IO-Link I/O modules fulfill the requirements and criteria of IEC 61131-2.

IEC 61131-9

The ET 200AL IO-Link I/O modules fulfill the requirements and criteria of the IO-Link standard IEC 61131-9.

Marine approval

Classification societies:

- ABS (American Bureau of Shipping)
- BV (Bureau Veritas)
- CCS (China Classification Society)
- Class NK (Nippon Kaiji Kyokai)
- DNV (Det Norske Veritas)
- KR (Korean Register of Shipping)
- LRS (Lloyds Register of Shipping)
- RINA (Registro Italiano Navale)

The article numbers of the approved I/O modules for the respective classification society is available here (https://support.industry.siemens.com/cs/ww/en/ps/14245/cert?ct=446).

Industrial use

The ET 200AL IO-Link I/O modules are designed for the industrial environment. The following standards are met for this:

- Requirements for interference emission EN IEC 61000-6-4: 2019
- Requirements for immunity EN IEC 61000-6-2: 2019

Use in mixed areas

Under certain circumstances, you can use the ET 200AL IO-Link I/O modules in a mixed area. A mixed area is used for residential purposes and for commercial operations that do not significantly impact the residential purpose.

If you want to use the ET 200AL IO-Link I/O modules in a mixed area, you must ensure that its radio frequency interference emissions comply with the limits of EN 61000-6-3. Suitable measures for observing these limits for use in a mixed area are, for example:

- Use of filters in supply cables

An additional individual acceptance test is also required.

Use in residential areas

NOTE

ET 200AL IO-Link I/O modules are not intended for use in residential areas

The ET 200AL IO-Link I/O modules are not intended for use in residential areas. Using the ET 200AL IO-Link I/O modules in residential areas can affect radio and television reception.

Reference

The certificates for the markings and approvals can be found on the Internet under Service&Support (http://www.siemens.com/automation/service&support).

9.2 Electromagnetic compatibility

Definition

Electromagnetic compatibility is the ability of an electrical apparatus to function in a satisfactory manner in its electromagnetic environment without affecting this environment.
The ET 200AL IO-Link I/O modules fulfill the requirements of the EMC law of the European Single Market. The prerequisite for this is that the ET 200AL IO-Link I/O modules comply with the requirements and guidelines regarding the electrical configuration.

Pulse-shaped disturbance variables

The following table shows the electromagnetic compatibility of the ET 200AL IO-Link I/O modules with respect to pulse-shaped disturbance variables.

Table 9-1 Pulse-shaped disturbance variables

Pulse-shaped disturbance variable	Tested with	Conforms to degree of severity
Electrostatic discharge according to IEC 61000-4-2.	Air discharge: ±8 kV	3
	Contact discharge: ±4 kV	2
Burst pulses (rapid transient disturbance values) according to IEC 61000-4-4.	±2 kV (power supply cable)	3
	±1 kV (signal line <30 m)	3

Sinusoidal disturbance variables

The tables below show the electromagnetic compatibility of the ET 200AL IO-Link I/O modules with respect to sinusoidal disturbance variables.

Table 9-2 RF radiation

RF radiation according to IEC 61000-4-3 Electromagnetic RF field, amplitude modulated		Conforms to degree of severity
80 ... 1000 MHz	10 V/m	3
1.4 ... 6 GHz	3 V/m	2
80% AM (1 kHz)		

Table 9-3 RF coupling (signal and supply cables)

RF coupling according to IEC 61000-4-6.	Conforms to degree of severity
0.15 ... 80 MHz	3
10 V_{rms} unmodulated	
80% AM (1 kHz)	
150 Ω source impedance	

Emission of radio frequency interference

The table below shows the interference emission of electromagnetic fields according to EN 55011: limit class A, group 1.

Table 9-4 Interference emission of electromagnetic fields

Frequency	Interference emission	Measuring distance
30 ... 230 MHz	<40 dB (µV/m) Q	10 m
230 ... 1000 MHz	<47 dB (µV/m) Q	10 m
1 GHz ... 3 GHz	<76 dB (µV/m) P	3 m
3 GHz ... 6 GHz	<80 dB (µV/m) P	3 m

24 V supply connection

The following table shows the measuring ranges of the power supply according to EN 55016.

Table 9-5 Interference emission from the power supply

Frequency	Interference emission
0.15 ... 0.5 MHz	89 dB (µV) Q 76 dB (µV) M
0.5 ... 30 MHz	83 dB (µV) Q 70 dB (µV) M

9.3 Transport and storage conditions

Transport and storage conditions

The ET 200AL IO-Link I/O modules surpass the requirements of IEC 61131-2 regarding transport and storage conditions. The following table shows the conditions that apply to modules transported or stored in their original packaging.

Table 9-6 Transport and storage conditions

Type of condition	Permitted range
Free fall	≤0.3 m
Temperature	-40 °C ... +70 °C
Temperature variation	20 K/h
Barometric pressure	1140 ... 660 hPa (corresponds to an altitude of -1000 to 3500 m)
Relative humidity	5 ... 95%

9.4 Mechanical and climatic ambient conditions

Operating conditions

The ET 200AL IO-Link I/O modules are intended for weather-proof, stationary use.

- The operating conditions surpass the requirements of IEC 61131-2:
  - Class OTH2

You can find the values for the operating conditions in the technical specifications of the equipment manuals or on the Internet (https://support.industry.siemens.com/cs/de/en/view/109742718).

Tests for mechanical ambient conditions

The following table shows the type and scope of the tests for mechanical ambient conditions.

Table 9-7 Tests for mechanical ambient conditions

Condition tested	Test standard	Values
Vibrations	Vibration test according to IEC 60068-2-6.	Type of oscillation: Frequency sweeps with a rate of change of 1 octave/minute. 5 Hz ... 9.1 Hz, constant amplitude 15 mm 9.1 Hz ... 150 Hz, constant acceleration 5 g Duration of oscillation: 10 frequency sweeps per axis at each of three vertically aligned axes
Shock	Shock, tested according to IEC 60068-2-27	Type of shock: Half-sine Shock intensity: 30g peak value, 18 ms duration Direction of shock: 3 shocks each in ± direction in each of the 3 axes vertical to one another

Climatic ambient conditions

The following table shows the type and scope of the tests on climatic ambient conditions.

Table 9-8 Climatic ambient conditions

Ambient conditions	Fields of application	Comments
Temperature	-30 °C ... 55 °C	All installation positions
Temperature variation	10 K/h	-
Relative humidity	5 ... 100%	With condensation
Barometric pressure	1140 ... 795 hPa	Corresponds to an altitude of -1000 m ... 2000 m
Pollutant concentration	ANSI/ISA-71.04 severity level G1; G2; G3	-

9.5 Details on insulation, protection class, degree of protection and rated voltage

Insulation

The insulation is designed in compliance with the requirements of IEC 61010-2-201.

NOTE

For modules with 24 V DC supply voltage (SELV/PELV), electrical isolations are tested with 707 V DC (type test).

Protection class according to IEC 61010-2-201

- Protection class III

Degree of severity for direct current-supplied equipment

The IO-Link I/O devices fulfill severity class PS1.

Pollution degree / overvoltage category according to IEC 61131

- Pollution degree 3
- Overvoltage category: II

Degree of protection IP65 and IP67

Degree of protection IP65 and IP67 according to IEC 60529 for all ET 200AL IO-Link I/O modules:

- 1. Code number: Dust-proof and complete protection from contact
- 2. Code number: Protection from water
  - IP65: Protection from water jets from any angle
    The water must not have any damaging effect.
  - IP67: Protection against temporary immersion
    The water must not enter the enclosure in harmful quantities.

Rated voltage for operation

The following table shows the rated voltage and the corresponding tolerance with which the ET 200AL IO-Link I/O modules operate.

Table 9-9 Rated voltage for operation

Rated voltage (SELV/PELV)	Tolerance range
1L+	18 ... 30 V DC

Rated voltage (SELV/PELV)	Tolerance range
2L+	20.4 ... 28.8 V DC

9.6 Safety-related symbols for IP65/IP67 modules

The following table contains an explanation of the symbols located on your IP65/67 modules, their packaging or in the accompanying documentation.

Symbol	Meaning
	General warning sign **Caution/Notice** You must read the product documentation. The product documentation contains information about the type of potential hazard and enables you to recognize risks and implement countermeasures.
	The assigned safety symbols apply to devices **with Ex approval**. You must read the product documentation. The product documentation contains information about the type of potential hazard and enables you to recognize risks and implement countermeasures.
	Read the information provided by the product documentation. ISO 7010 M002
	Ensure the device is only installed by an electrically skilled person. IEC 60417 No. 6182
	Note that connected mains lines must be designed according to the expected minimum and maximum ambient temperature.
	Note that the device must be constructed and connected in accordance with EMC regulations.
	Note that a 230 V device can be exposed to electrical voltages which can be dangerous. ANSI Z535.2
	Note that a device of Protection Class III may only be supplied with a protective low voltage according to the standard SELV/PELV. IEC 60417-1-5180 "Class III equipment"
	Be aware that the device is only approved for the industrial field and only for indoor use.

Safety-related shutdown of ET 200AL IO-Link modules

A

Introduction

The following structure describes how to shut down ET 200AL IO-Link modules in a fail-safe manner.

In the configuration shown in the diagram below (e.g. with the safety shutdown device 3SK1), all digital outputs that are connected to the 2L+ and 2M supply (24 V switched) of the ET 200AL IO-Link modules are switched to the safe OFF state. This step achieves the safety class SIL2/Category 3/PL d.

Principle of operation

The higher-level safety shutdown device (e.g. 3SK1) disconnects the supply 2L+ and 2M switched. The digital outputs of the ET 200AL IO-Link modules operated on the 2L+ and 2M (24 V switched) supply are switched to the safe state.

There are two ways to connect the 2L+ and 2M supply voltage to an IO-Link module.

- Via the IO-Link master Port Class B
- Via the M12-L plug for the supply voltage

Block diagram

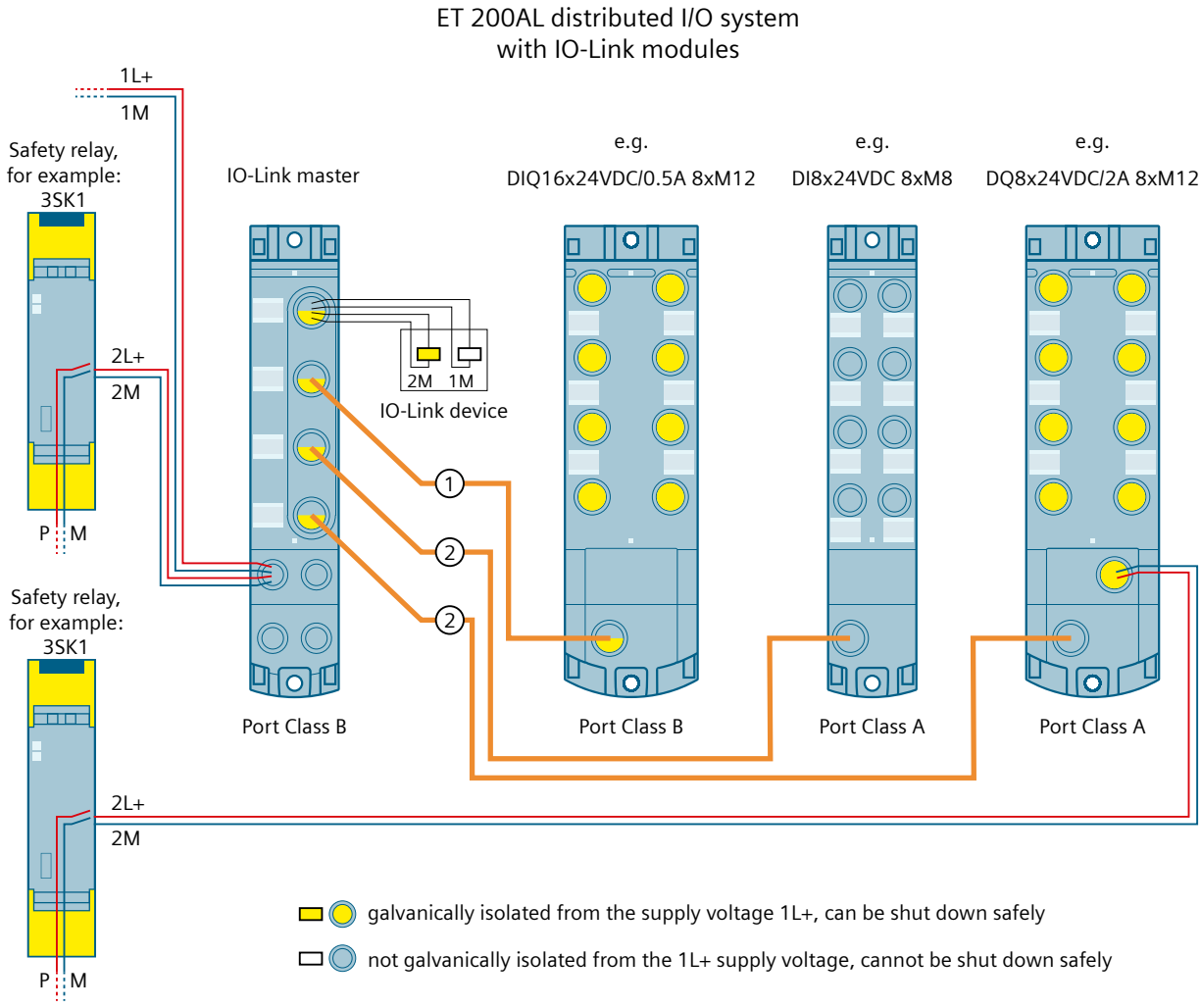

① 5-wire cable for a Port Class B connection

② 3-wire cable for a Port Class A connection

Figure A-1 Higher-level safety circuit of the outputs

⚠ WARNING

Note potential groups for safety-related shutdown

When a digital output is connected to a digital input, pay attention to the potential groups. Depending on the configuration, 1M and 2M can be connected through this, which leads to cancellation of the electrical isolation between 1L+ and 2L+.
The safety-related shutdown is not permitted if the electrical isolation is canceled.

NOTE

Safe electrical separation

Maintain safe galvanic isolation for voltages higher than SELV/PELV.

NOTE

Selection of the IO-Link master

If the safety-related shutdown is performed via the IO-Link master, ensure that the master has the appropriate safety characteristics.

NOTE

IO-Link cable

Use a 3-wire cable for the connection of an IO-Link master with Port Class B and an IO-Link device with Port Class A.

Limits of the higher-level safety circuit

The ET 200AL IO-Link modules do not perform any safety functions. Safety functions are performed by the safety relay to bring the system into a safe state.
Adjust the operation inspection interval of the safety relay with relay output according to the safety class.
Take the following measures if energy that is not provided by the higher-level safety circuit is used to control the safety function.
Cover critical errors in the safety function that are not detected by the higher-level safety circuit (e.g. 3SK1) with suitable safety measures. The "diagnostics" must be performed indirectly via the controlled process.
Specifications for safety-relevant process data:

- Functionally safe
- Read via fail-safe inputs (e.g. F-DI)
- Fail-safe processing unit (e.g. F-CPU) for issuing commands
- Output through fail-safe outputs (e.g. F-DQ) to control the safety function

Requirements on the power supply

Operation requires a SELV/PELV power supply to limit overvoltages to L+ and M (24 V). This measure prevents possible errors from the power supply side at the same time.
Select the power supply according to the requirements of the respective operating instructions for the shutdown device and for the ET 200AL system.
You can find more information on safe SELV/PELV in the data sheets of the power supplies used.

FAQ

Read the latest information on safety-related shutdown in the FAQ (https://support.industry.siemens.com/cs/us/en/view/39198632).
In this FAQ, you can find the SIMATIC standard modules that are suitable for safety-related shutdown.

Request German Technical Inspectorate report (Report no. SN89858T)

You can request copies of the German Technical Inspectorate report at the following address:
SIEMENS AG
Digital Industries
DI FA TI COS TT
P.O. Box 1963
D-92209 Amberg, Germany

Dimension drawings

B

Two module widths are available for the IO-Link I/O modules.

The figure below shows the height and width of the modules. The depth of the modules varies between 40 mm and 45 mm. Detailed information on the dimensions of the individual modules can be found in the equipment manuals for the IO-Link I/O modules in the section "Dimension drawing".

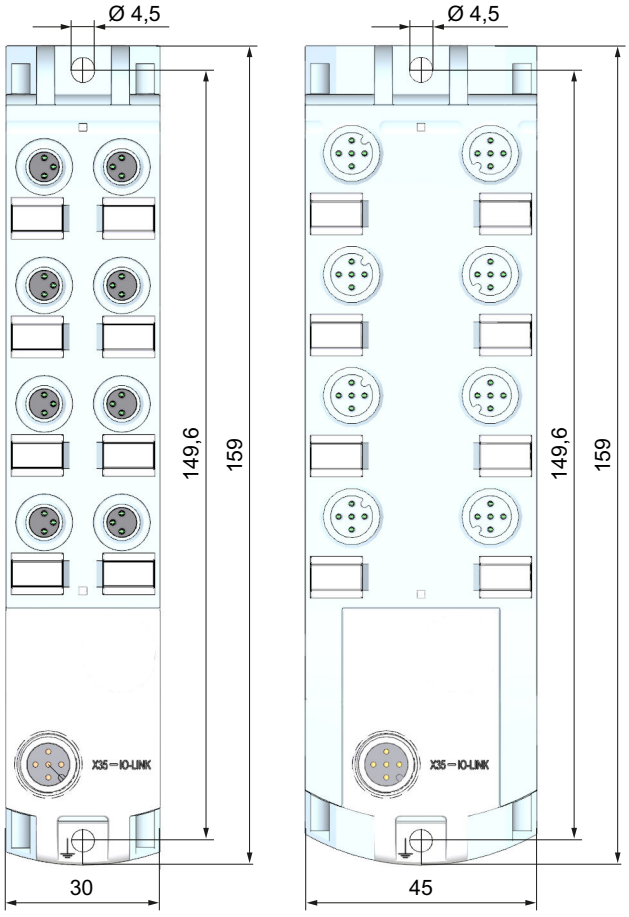

Figure B-1 Module dimension drawings (front view)

Accessories/spare parts

C

C.1 Accessories/spare parts

Accessories for the ET 200AL IO-Link I/O modules

Table C-1 Accessories for connection to an IO-Link master

Designation	Length	Article number
Cable is pre-assembled		
M12 CONNECTING CABLE, A-CODED ET 200 Pre-assembled cable with M12 plug and M12 socket, A-coded, 5-pole, 5 x 0.25	0.5 m	6XV1801-2CE50
	1.0 m	6XV1801-2CH10
	1.5 m	6XV1801-2CH15
	2.0 m	6XV1801-2CH20
	3.0 m	6XV1801-2CH30
	5.0 m	6XV1801-2CH50
	10.0 m	6XV1801-2CN10
	15.0 m	6XV1801-2CN15

Table C-2 Accessories for power supply 2L+ of the DQ 8x24VDC/2A 8xM12

Designation	Length	Article number
Cable is pre-assembled		
M12 CONNECTING CABLE, L-CODED Power connecting cable M12-180/M12-180 for power supply of ET 200 Pre-assembled cable with M12 plug and M12 socket, L-coded, 4-pole	0.5 m	6XV1801-6DE50
	1.0 m	6XV1801-6DH10
	1.5 m	6XV1801-6DH15
	2.0 m	6XV1801-6DH20
	3.0 m	6XV1801-6DH30
	5.0 m	6XV1801-6DH50
	10.0 m	6XV1801-6DN10
	15.0 m	6XV1801-6DN15
Cable and socket can be assembled in the field		
Power M12 Cable Connector PRO; M12 connector with female contact insert, 4-pole, L-coded		6GK1906-0EB00
Energy cable 4 x 1.5; power cable (4-wire), by the meter, unassembled		6XV1801-2B

Table C-3 Dual connection

Designation		Article number
SIMATIC DP, Y cable for distributed I/Os for double connection of I/Os using single cable, 5-pole, M12	0.2 m	6ES7194-6KA00-0XA0

Table C-4 Additional accessories

Designation	Article number
Identification labels 10 x 5 mm RAL9016, composed of 200 labels on frames, per frame 40 labels	6ES7194-2BA00-0AA0
Sealing cap M8 for modules IP67	3RK1901-1PN00
Sealing cap M12 for modules IP67	3RX9802-0AA00

Online catalog

Additional article numbers for the ET 200AL IO-Link I/O modules can be found on the Internet (https://mall.industry.siemens.com) in the online catalog and online ordering system.

C.2 UL-approved cables

UL-approved cables from PHOENIX CONTACT

In combination with the named cables of the manufacturer PHOENIX CONTACT, the IO-Link I/O modules of the SIMATIC ET 200AL distributed I/O system meet the requirements for UL approval.

Table C-5 Accessories for connection to an IO-Link master

Description	Length	Designation	Article number
Cable: pre-assembled 1.5 mm²			
M12 CONNECTING CABLE, A-CODED Sensor/actuator cable, 5-pole, PUR halogen-free, black gray RAL 7021, shielded, straight plug M12, coding: A, to straight socket M12, coding: A	0.3 m	SAC-5P-M12MS/ 0,3-PUR/M12FS SH	1500884
	0.6 m	SAC-5P-M12MS/ 0,6-PUR/M12FS SH	1500897
	1.5 m	SAC-5P-M12MS/ 1,5-PUR/M12FS SH	1500907
	3.0 m	SAC-5P-M12MS/ 3,0-PUR/M12FS SH	1500910
Cable: Socket - open end 1.5 mm²			
M12 CONNECTING CABLE, A-CODED Sensor/actuator cable, 5-pole, PUR halogen-free, black gray RAL 7021, shielded, free cable end, to straight socket M12, coding: A	1.5 m	SAC-5P-1,5-PUR/M12FS SH	1682935
	3.0 m	SAC-5P-3,0-PUR/M12FS SH	1682948
	5.0 m	SAC-5P-5,0-PUR/M12FS SH	1682951
	10.0 m	SAC-5P-10,0-PUR/M12FS SH	1500758

Table C-6 Accessories for DI/DQ connection

Description	Length	Designation	Article number
Cable: pre-assembled 0.25 mm²			
M8 CONNECTING CABLE, straight Sensor/actuator cable, 3-pole, PUR halogen-free, black gray RAL 7021, straight plug M8, to straight socket M8	0.3 m	SAC-3P-M 8MS/ 0,3-PUR/M 8FS	1681907
	0.6 m	SAC-3P-M 8MS/ 0,6-PUR/M 8FS	1681910
	1.5 m	SAC-3P-M 8MS/ 1,5-PUR/M 8FS	1681923

Description	Length	Designation	Article number
M8 CONNECTING CABLE, straight Sensor/actuator cable, 3-pole, PUR halogen-free, black gray RAL 7021, straight plug M8, to straight socket M8	3.0 m	SAC-3P-M 8MS/ 3,0-PUR/M 8FS	1681936

Table C-7 Accessories for additional power supply

Description	Length	Designation	Article number
Cable: pre-assembled 2.5 mm^2			
M12 CONNECTING CABLE, L-CODED Power cable, 4-pole, PUR halogen-free, black gray RAL 7021, straight plug M12, coding: L, to straight socket M12, coding: L	0.3 m	SAC-4P-M12MSL/0,3-PUR/FSL	1425081
	0.6 m	SAC-4P-M12MSL/0,6-PUR/FSL	1425082
	1.5 m	SAC-4P-M12MSL/1,5-PUR/FSL	1425083
	3.0 m	SAC-4P-M12MSL/3,0-PUR/FSL	1425084
Cable: Socket - open end 2.5 mm^2			
M12 CONNECTING CABLE, L-CODED Power cable, 4-pole, PUR halogen-free, black gray RAL 7021, straight socket M12, coding: L, to free cable end	5.0 m	SAC-4P-5,0-PUR/M12FSL	1425075
	10.0 m	SAC-4P-10,0-PUR/M12FSL	1425076
Cable: pre-assembled 1.5 mm^2			
M12 CONNECTING CABLE, L-CODED Power cable, 4-pole, PUR halogen-free, black gray RAL 7021, straight plug M12, coding: L, to straight socket M12, coding: L	0.3 m	SAC-4P-M12MSL/0,3-105/FSL	1425041
	0.6 m	SAC-4P-M12MSL/0,6-105/FSL	1425042
	1.5 m	SAC-4P-M12MSL/1,5-105/FSL	1425043
	3.0 m	SAC-4P-M12MSL/3,0-105/FSL	1425044
Cable: Socket - open end 1.5 mm^2			
M12 CONNECTING CABLE, L-CODED Power cable, 4-pole, PUR halogen-free, black gray RAL 7021, straight socket M12, coding: L, to free cable end	5.0 m	SAC-4P-5,0-105/M12FSL	1425035
	10.0 m	SAC-4P-10,0-105/M12FSL	1425036

UL-approved cables from Siemens

In combination with the named cables for the connection of DI/DQ of the manufacturer Siemens, the IO-Link I/O modules of the SIMATIC ET 200AL distributed I/O devices meet the requirements for UL approval.

Table C-8 Accessories for DI/DQ connection

Designation	Length	Article number
Pre-assembled cables and connectors		
Power connecting cable M12-180/M12-180 for power supply of ET 200, pre-assembled cable with M12 plug and M12 socket, A-coded, 5-pole	0.3 m	6XV1801-5DE30
	0.5 m	6XV1801-5DE50
	1.0 m	6XV1801-5DH10
	1.5 m	6XV1801-5DH15
	2.0 m	6XV1801-5DH20
	3.0 m	6XV1801-5DH30
	5.0 m	6XV1801-5DH50
	10.0 m	6XV1801-5DN10
	15.0 m	6XV1801-5DN15

Designation	Length	Article number
Power connecting cable M12-90/M12-90 for power supply of ET 200, pre-assembled cable with M12 plug and M12 socket, A-coded, 5-pole	0.3 m	6XV1801-5GE30
	0.5 m	6XV1801-5GE50
	1.0 m	6XV1801-5GH10
	1.5 m	6XV1801-5GH15
	2.0 m	6XV1801-5GH20
	3.0 m	6XV1801-5GH30
	5.0 m	6XV1801-5GH50
	10.0 m	6XV1801-5GN10
	15.0 m	6XV1801-5GN15
Robust power connecting cable M12-180/M12-180 for power supply of ET 200, pre-assembled cable with M12 plug and M12 socket, A-coded, 5-pole	1.0 m	6XV1801-5AH10
	2.0 m	6XV1801-5AH20
	3.0 m	6XV1801-5AH30
	5.0 m	6XV1801-5AH50

Glossary

C/Q

IO-Link communication signal / switching signal

Connection plug

Physical connection between device and cable.

Device

Device that can send, receive or amplify data via the bus, e.g. IO device via PROFINET IO.

Diagnostics

Monitoring functions for the detection, localization, classification, display, and further evaluation of errors, faults, and alarms. They run automatically while the system is in operation. This increases the availability of systems by reducing commissioning times and downtimes.

Distributed I/O system

System with input and output modules that are configured on a distributed basis, far away from the CPU controlling them.

Firmware update

Upgrading the firmware of IO-Link I/O modules, for example, after function extensions, to the latest firmware version (update).

Ground

Conductive earth whose electrical potential can be set equal to zero at any point.
All interconnected, inactive parts of a piece of equipment that cannot accept any dangerous contact voltage, even in the event of a fault.

Identification data

Information that is saved in modules and that supports the user in checking the plant configuration and locating hardware changes.

IO-Link

Standard for communication of actuators and sensors in the lowest field level.

IO-Link device

Distributed field device that is connected to an IO-Link master via an IO-Link cable.

IO-Link I/O modules

I/O modules that are connected to an IO-Link master and operated via an IO-Link connection.

IO-Link master

The IO-Link master is a module that is connected to the CPU (IO controller) via a fieldbus and to IO-Link devices via IO-Link cables. It prepares the data for/from the IO-Link devices and can back up and restore the parameters.

Parameter assignment

Parameter assignment is the transfer of parameters from the IO-Link master to the IO-Link I/O module.

PELV

P rotective **E** xtra **L** ow **V** oltage = Extra low voltage connected to protective ground

PROFINET

PROcess FIeld NETwork, open Industrial Ethernet standard, which continues PROFIBUS and Industrial Ethernet. A cross-manufacturer communication, automation and engineering model, defined as an automation standard by PROFIBUS International e.V.

PROFINET IO controller

Device used to address connected I/O devices (e.g. distributed I/O systems). This means that: The IO controller exchanges input and output signals with assigned I/O devices. The IO controller often corresponds with the CPU in which the automation program is running.

PROFINET IO device

Distributed field device that can be assigned to one or more IO controllers (for example, distributed I/O system, valve terminals, frequency converters, switches).

PROFINET IO

Communication concept for the realization of modular, distributed applications in the framework of PROFINET.

Reference potential

Potential from which the voltages of the circuits involved are observed and/or measured.

S7-PCT

S7-P ort **C** onfiguration **T** ool = Siemens program for configuring IO-Link devices.

SELV

S afety **E** xtra **L** ow **V** oltage

TIA Portal

Totally Integrated Automation Portal
The TIA Portal is the key to the full performance capability of Totally Integrated Automation. The software optimizes operating, machine and process sequences.

Index

2

24 V DC supply, 26

A

Accessories, 65
Ambient conditions
  Mechanical, 57
  Climatic, 57
Application, 25
Approvals, 51

B

Burst pulses, 55

C

Cables, 25
Cable ties, 23
Climatic ambient conditions, 57
Commissioning
  Startup on PROFIBUS DP, 45
Components, 16
Configuration, 16
  Power supply, 33
  Functional ground, 33
Configuration software, 42
Configuration variant
  PROFINET IO, 17
Configuring, 42
Connecting
  Conductive surface, 34
  Non-conductive surface, 35
  M8 connectors, 37
  M12 connectors, 38

D

Degree of protection, 58
Device number, 47
Dimension drawing
  Modules, 64
Drill holes, 21

E

Electrical isolation, 32
Electromagnetic compatibility, 55
Electrostatic discharge, 55
EMC, 55
EMERGENCY-STOP device, 25
Emission of radio frequency interference, 56
ET 200AL
  Area of application, 15
ET 200AL IO-Link modules
  Safety-related shutdown, 60

F

Firmware update, 47
Functional ground, 33
Fuse, 25

G

German Technical Inspectorate report, 63
Grounded infeed, 27

I

Identification label, 16
  Mounting, 41
  Removing, 41
Infeed
  Grounded, 27
  Ungrounded, 27
Insulation, 58
Insulation monitoring, 32
Interface module
  Wiring, 36
IODD
  Device description, 42
IO-Link
  Definition, 14
  Configuration tool, 43

L

Line voltage, 26

M

M12 connectors, 38
M8 connectors, 37
Maintenance, 46
Marking
  Factory, 39
  Interfaces, 39
  Optional, 40
Mechanical ambient conditions, 57
Minimum clearances, 20
Mounting, 20
  I/O module, 21
  Interface module, 22
Mounting position, 20

O

Overall configuration, 29

P

PELV, 28
Pin assignment, 38, 40
Port Class
  Type B, 17
Port classes
  Type A, 17
Protection class, 58
Protective measures, 31
Pulse-shaped disturbance variables, 55

R

Radio interference, 54
Rated voltage, 58
Reference potential
  Grounded, 28
  Ungrounded, 28

S

Safe electrical isolation, 28
Screws, 21
SELV, 28
Shock, 57
SIMATIC ET 200AL, 14
Sinusoidal disturbance variables, 55
Sockets, 39
Spare parts, 65
Standards, 51
Switch, 25
System conditions, 25
System configuration
  Grounded reference potential, 28
  Ungrounded reference potential, 28
  Protective measures, 31

T

Technical specifications
Standards and authorizations, 51
Test voltage, 58
TN-S grid, 27
Tool, 21
Transport and storage conditions, 56

U

Ungrounded infeed, 27
Use
in industrial environments, 54
in mixed areas, 54
in residential areas, 54

V

Vibrations, 57

W

Wires, 25