EN - For pricing and availability in your local country please visit one of the below links:

DE - Informationen zu Preisen und Verfügbarkeit in Ihrem Land erhalten Sie über die unten aufgeführten Links:

FR - Pour connaître les tarifs et la disponibilité dans votre pays, cliquez sur l'un des liens suivants:

SC648ADPR

EN
This Datasheet is presented by the manufacturer

DE
Dieses Datenblatt wird vom Hersteller bereitgestellt

FR
Cette fiche technique est présentée par le fabricant

MALLORY Mallory Sonalert Products Inc.	Part # SC648ADPR
Sales Outline Drawing	Revision C

Specifications:

Sound level Category	Medium Sound Level
Mode of Operation	Fast Pulse
Mounting	Panel (see note B)
Voltage Rating	10 to 48 Vac/dc
Frequency	1900 Hz ±300 Hz
Loudness (Min. Voltage)	60 dB(A) min. @ 2 FT and 10 Vac/dc
Loudness (Max Voltage)	75 dB(A) min. @ 2FT and 48 Vac/dc
Current Draw	4 mA Max @ 10 Vac/dc
Current Draw	20 mA Max @ 48 Vac/dc
Min. Pulse Rate (PPS)	2 @ 10 Vac/dc
Max. Pulse Rate (PPS)	10 @ 48 Vac/dc
Duty Cycle (%)	50 (Approx)
Storage Temperature	-40°C to +85°C
Operating Temperature	-30°C to +65°C
Weight (Typical)	2.1 oz (60 g)
Housing	6/6 Nylon, Color Black
Options	For other options contact factory

Dimensions: Inches (mm)

RoHS Compliant

PART DIMENSIONS BEFORE CODE DATE 0810 5

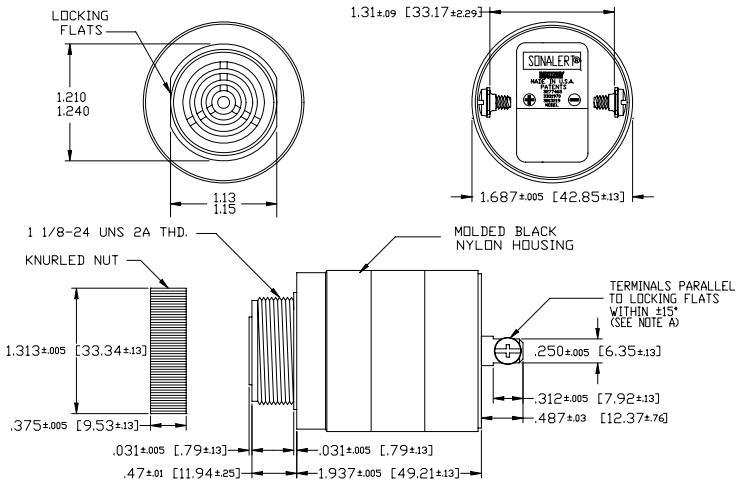

NOTE A: TERMINALS-.032 BRASS TIN PLATED, TAPPED FOR #6-32 SCREW. TWO #6-32 NICKEL PLATED BRASS SCREWS INCLUDED. WILL ACCEPT 1/4" QUICK CONNECT.

NOTE B: MOUNTING- REMOVE BLACK PLASTIC NUT AND INSERT THREADED FRONT THROUGH 1.25" HOLE PUNCHED IN PANEL, IF ORIENTATION IS NEEDED, NOTE LOCKING FLATS ON DRAWING. SCREW NUT BACK ON. DO NOT OVERTIGHTEN.

PART DIMENSIONS AFTER CODE DATE 0811 1

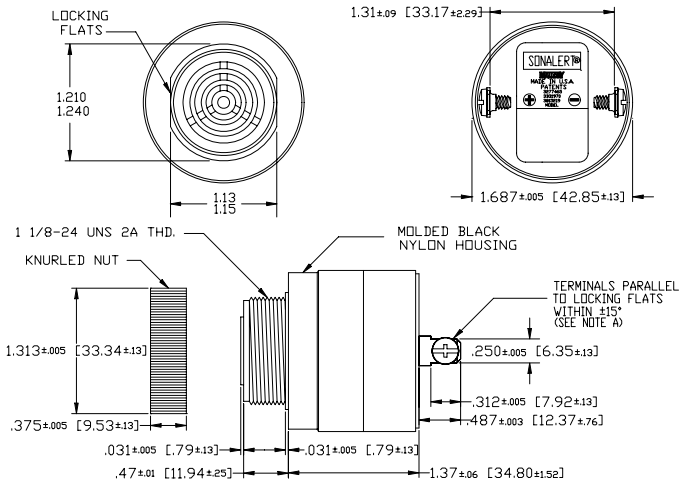

NOTE A: TERMINALS-.032 BRASS TIN PLATED, TAPPED FOR #6-32 SCREW. TWO #6-32 NICKEL PLATED BRASS SCREWS INCLUDED. WILL ACCEPT 1/4" QUICK CONNECT.

NOTE B: MOUNTING- REMOVE BLACK PLASTIC NUT AND INSERT THREADED FRONT THROUGH 1.25" HOLE PUNCHED IN PANEL, IF ORIENTATION IS NEEDED, NOTE LOCKING FLATS ON DRAWING. SCREW NUT BACK ON. DO NOT OVERTIGHTEN.

EN - For pricing and availability in your local country please visit one of the below links:

DE - Informationen zu Preisen und Verfügbarkeit in Ihrem Land erhalten Sie über die unten aufgeführten Links:

FR - Pour connaître les tarifs et la disponibilité dans votre pays, cliquez sur l'un des liens suivants:

SC648ADPR

EN
This Datasheet is presented by the manufacturer

DE
Dieses Datenblatt wird vom Hersteller bereitgestellt

FR
Cette fiche technique est présentée par le fabricant