PLEASE PUT THIS OPERATOR'S MANUAL IN THE DRIVER'S CAB

Edbro
SETTING THE INDUSTRY STANDARD
Nelson Street, Bolton, Lancs. BL3 2JJ
Telephone: 01204 528888
Fax: 01204 531957
Spares fax: 01204 393561
E-mail: postmaster@edbro.co.uk
www.edbro.com

Edbro publication - Modified March 2007. Ref. number E5157C

E5157C

Edbro

CONFORMS WITH EUROPEAN REGULATIONS CE

OPERATOR'S MANUAL

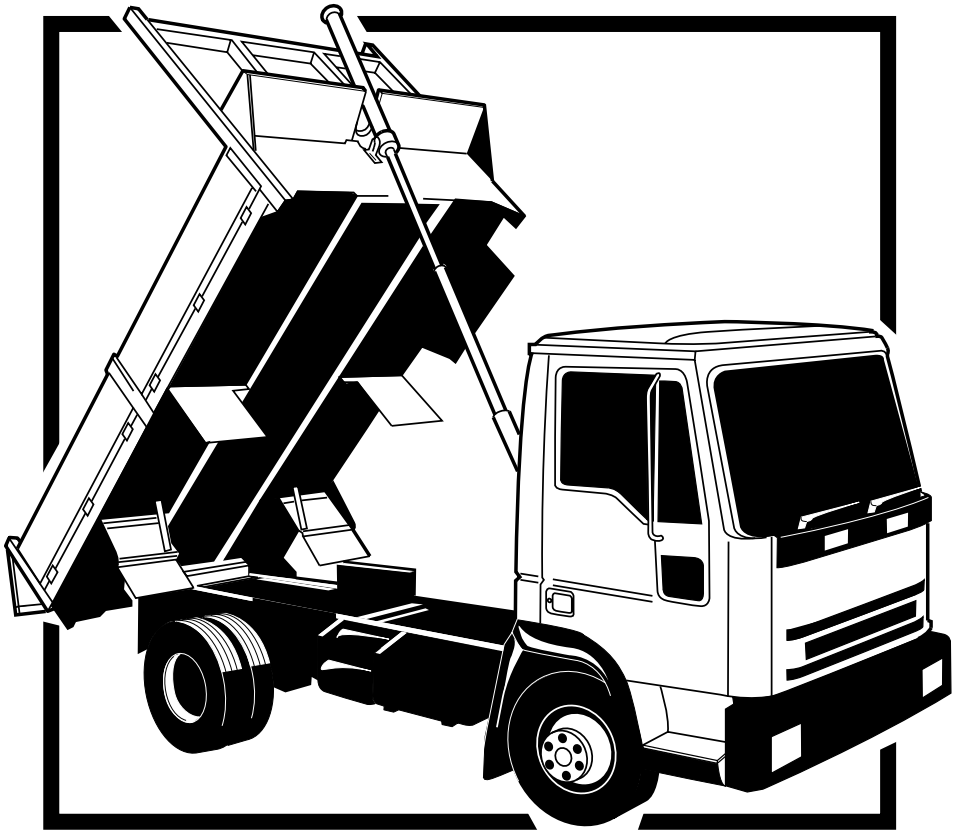

1SEC & 1LNC TO 4LNC HOISTS

Edbro
SETTING THE INDUSTRY STANDARD

Nelson Street
Bolton, England
BL3 2JJ

DECLARATION OF INCORPORATION

This is to certify that Edbro products

LNC BORE SEALING HOISTS

comply with all relevant Essential Safety Requirements of the European Community Machinery Directive 89/392/EEC as amended, and the national laws and regulations adopting this directive.

These products must be installed, and where appropriate, tested, in accordance with Edbro instructions. Only genuine Edbro components including spare parts must be used.

They must not be put into service until the machinery into which they are incorporated has been declared in conformity with the provisions of all relevant EC directives and appropriately CE marked.

G.D. CREAMER
Technical Director

Being the person appointed by the manufacturer

March 1998

This is an example of our Declaration of Incorporation. If you require an individual copy for your technical file, call Edbro Sales.

Record your hoist details below:
(refer to hoist serial plate - see pages 3 & 4)

Hoist model code;

Hoist serial number;

Date put into service;

SERVICE LOCATIONS



For full details of the complete network of specialist spares and service agents visit our website at www.edbro.com or call Edbro Service on 01204 902263.

SERVICE LOCATIONS

SHREWSBURY
50. Bulkrite (Andrew Davies/Colin Jenks)
Thorne Works, Dorrington, Shrewsbury,
Shropshire, SY5 7EB
Tel: 01743 781232
Fax: 01743 718293
E-mail: andrew@bulkrite.co.uk

SOUTHAMPTON
51. Sibley Material Movements Ltd
(Kevin Brawn/John Sibley)
Andes Road, Nursling Ind. Estate,
Southampton, SO16 0YZ
Tel: 023 80737773
Fax: 023 80740193
E-mail: john@materialmovements.com
Web: www.materialmovements.com

ST HELENS
52. Abba Commercial Bodies
(Richard Neary/Neil Stalker)
Burtonhead Road, St Helens,
Merseyside, WA9 5EA
Tel: 01744 752202
Fax: 01744 205150
E-mail: sales@abbacommercials.com
Web: www.abbacommercials.com

53. Woodwards SVS
(Paul Hockney/Colin Newell)
Merton Street, Merton Bank, St Helens,
Merseyside, WA9 1HU
Tel: 01744 20266
Fax: 01744 752226
E-mail: woodwardssvsltd@tiscali.co.uk

STOKE-ON-TRENT
54. Graham Moss (Graham Moss)
Capri, Gallows Green, Stoke-on-Trent,
Staffs, ST10 4BN
Tel: 01538 702613
Fax: 01538 702613
Mob: 07802 561507
E-mail: grahammossltd@tiscali.co.uk

SUDBURY
55. Webb Truck Equipment (Roger Edwards)
Acton Place, Acton, Sudbury,
Suffolk, CO10 0BB
Tel: 01787 377368
Fax: 01787 880618
E-mail: info@extrareach.co.uk
Web: www.extrareach.co.uk

VALE
56. Rabey's Commercial Vehicles
(Colin Falla/Roger Finch)
PO Box 507, Northside, Vale, Guernsey,
Channel Islands, GY1 6DP
Tel: 01481 244551
Fax: 01481 248825
E-mail: mail@rabeys.com
Web: www.rabeys.com

WISBECH
57. Priden Engineering Ltd
(Andy Fordham/Ivon Moden/David Winter)
Algores Way, Wisbech, Cambs, PE13 2TQ
Tel: 01945 588476
Fax: 01945 474176
E-mail: andy.fordham@priden.co.uk
Web: www.priden.co.uk

58. United Trailers UK Ltd (Philip Boyce)
Layton House, Nene Parade, Wisbech,
Cambs, PE13 3YA
Tel: 01945 465311
Fax: 01945 464785
E-mail: sales@unitedtrailers.co.uk
Web: www.unitedtrailers.co.uk

WORTHING
59. Municipal Engineering 2000 Ltd
(Chris Perry)
Worthing Council Depot, Meadow Road, Worthing,
West Sussex, BN11 2SA
Tel: 01903 824392
Fax: 01903 824947
E-mail: office@me2000.co.uk

WREXHAM
60. L & D Brothers
(Lawrance Griffiths/Jason Thomas)
Croes-y-Mab, Marchwiel,
Wrexham, LL13 0PF
Tel: 01978 365155
Fax: 01978 354084
E-mail: landdbrothers@aol.com

YORK
61. Aero (UK) Ltd
(Anthony Chapman/Colin Chapman)
Unit 1 & 2 Buccaneer Park,
Airfield Business Park, York, YO41 4AU
Tel: 01904 607411
Fax: 01904 607412
E-mail: achapman@aerouk.co.uk
Web: www.aerouk.co.uk

CONTENTS

- Correct use 1
- Identification 2
- Familiarisation 2, 3, 4
- Safety 5
- Operating pressure 5
- Safety code 6, 7
- Controls 8, 9
- How to lift the body 10
- How to lower the body 11
- When driving 11
- Safety during maintenance 12
- Maintenance 13, 14, 15
- Oil (and filling the oil tank) 16
- Problem solving 17, 18
- Spare parts & service ..... 19 - 24

CORRECT USE

This hoist is designed to be assembled into a tipping vehicle for the movement of bulk commodities. This manual is intended as a general guide for safe tipping but more specific safety guidance should be supplied by the bodybuilder depending on the nature of the equipment. The bodybuilder can also advise on the maximum load capacity of the equipment, bearing in mind the hoist capability and road traffic regulations.

COPYRIGHT
No part of this publication may be reproduced or transmitted without the express written permission of Edbro plc.

IDENTIFICATION

The hoist is identified by a serial number plate on the side of the tank (see opposite).

The serial number of a 1SEC electro-hydraulic hoist is stamped on the base crosshead; the serial number plate of an electro-hydraulic power pack and tank is on the side of the tank.

The serial number and model code should be quoted in all correspondence.

The date of manufacture is quoted as week number/year.

Serial numbers for Edbro PTO and pumps are stamped on the casing or on a separate plate.

FAMILIARISATION

Before using this equipment, familiarise yourself with the key features opposite. The position of the hydraulic parts may vary depending on specification.

Before putting into service, confirm that the equipment is in good working order.

Check:

- hoses and fittings for abrasion and leaks
- check security of hoist and hinge mountings
- check oil level
- check PTO warning light is working.

SERVICE LOCATIONS

MIDDLEWICH
38. Feldbinder (UK) Ltd
(Edd Kerin/Dennis O'Rilly/Steve O'Rilly)
Faulkner Drive, Off Cledford Lane, Middlewich,
Cheshire, CW10 0NE
Tel: 01606 833481
Fax: 01606 832525
E-mail: service@feldbinder.co.uk
Web: www.feldbinder.co.uk

MILTON KEYNES
39. Reynolds Stantone (Paul Asbery)
Stile Brook Road, Yardley Road Industrial Estate,
Olney, MK46 5EA
Tel: 01234 711236
Fax: 01234 240138
E-mail: rstantone@aol.com
Web: www.reynoldsstantone.co.uk

NEATH
40. Neath Coachbuilders Limited
(Paul Oakley)
Penscynor, Cilfrew, Neath,
West Glamorgan, SA10 8LF
Tel: 01639 643629
Fax: 01639 646566
E-mail:enquiries@neathcoachbuilders.co.uk
Web: www.neathcoachbuilders.co.uk

NEWBURY
41. Gilson Engineering (Newbury) Ltd
(Gary Gilbert)
Unit 3 Sandleford Farm, Newton Road, Newbury,
Berks, RG20 9BB
Tel: 01635 41924
Fax: 01634 42286
E-mail: info@gilsoneng.co.uk
Web: www.gilsoneng.co.uk

NEWCASTLE-UPON-TYNE
42. Tipping Gears & Engineering Ltd
(Patrick Hazlehurst/Steve Ransom)
Haugh Lane, Blaydon-on-Tyne,
Tyne & Wear, NE21 4SA
Tel: 0191 4142015
Fax: 0191 4141272
E-mail: tippinggears.eng@virgin.net

NORTHALLERTON
43. Harker Hydraulics & Engineering Ltd
(John Harker)
Unit 8 Anchorage Lane, Northallerton,
North Yorks, DL7 8DX
Tel: 01609 777788
Fax: 01609 777708
E-mail: johnharker1@btinternet.com

PADSTOW
44. Danser (SW) Ltd (Derrick Daniels)
Trecerus Industrial Estate, Padstow,
Cornwall, PL28 8RW
Tel: 01841 533002
Fax: 01841 532021
E-mail: info@danser-hydaulics.co.uk
Web: www.danser-hydraulics.co.uk

PENRITH
45. Emerson's Commercial Services Ltd
(Alan Emerson)
Gilwilly Industrial Estate, Penrith,
Cumbria, CA11 9BG
Tel: 01768 864531
Fax: 01768 899367
E-mail: emersons.commercial@virgin.net

PETERBOROUGH
46. Wilcox Commercial Vehicles Limited
(Ray Osbourne)
Blenheim Way, Market Deeping,
Peterborough, RE6 8LD
Tel: 01778 345151
Fax: 01778 347269
E-mail: rosbourne@tippers.co.uk
Web: www.wilcox.uk.com

PLYMOUTH
47. Plymstock Commercials Ltd
(Mike Gilbery)
Unit 14 Central Avenue, Ivybridge,
Devon, PL21 9ER
Tel: 01752 201400
Fax: 01752 201591
Mob: 07813 362791
E-mail: plymstockcomms@eurotelonline.com
Web: www.plymstockcommercials.co.uk

PRESTON
48. Garstang Truck Bodies Ltd (Jim Gerraty)
Green Lane West, Garstang, Nr Preston,
Lancs, PR3 1NJ
Tel: 01995 604166
Fax: 01995 600889
E-mail: garstangtruckbodies@hotmail.com
Web: www.garstangtruckbodies.co.uk

SCUNTHORPE
49. Weightlifter Bodies Ltd
(Jeremy Robinson)
Grange Lane North, Scunthorpe,
Lincs, DN16 1BN
Tel: 01724 872444
Fax: 01724 853647
E-mail: sales@weightlifterbodies.com
Web: www.weightlifterbodies.com

SERVICE LOCATIONS

ISLE OF MAN
26. Outdoor Power & Plant (Malcolm Kirk)
Units 39-40 Snugborough Trading Estate,
Bradden, Isle of Man, IM4 4LH
Tel: 01624 611341
Fax: 01624 611537
E-mail: opp@manx.net

KILLARNEY
27. Hegarty's Vehicle Works (John Hegarty)
Castlelough, Kenmare Road, Killarney,
Co. Kerry (ROI)
Tel: 064 31064
Fax: 064 34856
E-mail: hvw@eircom.net

KILWINNING
28. Brown & Clements Ltd
(Findlay Brown/Robert Clements)
Unit 5 Caledonia House, Kilwinning,
Ayrshire, KA13 6EX
Tel: 01294 557725
Fax: 01294 554846
E-mail: brownandclements@yahoo.co.uk

LEICESTER
29. Truck Hydraulic Services
(Chris Armitage/Greg Wykes)
Unit 4 Maple Court, Walker Road, Bardon,
Leicestershire, LE67 1TU
Tel: 01530 510101
Fax: 01530 510101
Web: www.truckhydraulicservices.co.uk

LINCOLN
30. Pirtek Lincoln (Richard Webb)
Westminster Industrial Estate,
North Hykeham, Lincoln, LN6 3QY
Tel: 01522 686212
Fax: 01522 690807
E-mail: richard.webb@pirteklincoln.co.uk
Web: www.pirtek.co.uk

LIVINGSTON
31. Bulkweld Ltd (Eddie Mollon)
16B Houston Mains, Broxburn,
West Lothian, EH52 6PA
Tel: 01506 812000
Fax: 01506 812001
Email:shirleymollon@bulkweld.wanadoo.co.uk

LONDON
32. Ram Parts (Paul Kelly)
Unit 9 Harper Lodge Farm, Radlett,
Herts, WD7 7HU
Tel: 01923 850422
Fax: 01923 852422

LONDONDERRY
33. TBF Thompson (Garvagh) Ltd
(Brendan Convery/William Patterson)
6-10 Killyvalley Road, Garvagh, Coleraine,
Londonderry, BT51 5JZ (N.Ireland)
Tel: 028 29558353
Fax: 028 29557957

MALDON
34. Colliers Truck Builders Ltd (Andy Patton)
Unit 15 Blackwater Trading Estate, Maldon,
Essex, CM9 4GG
Tel: 01621 843109
Fax: 01621 843047
E-mail: andy@collierstrucks.wanadoo.co.uk
Web: www.collierstruckbuilders.co.uk

MANCHESTER
35. Approved Hydraulics
(Geoff Hindle/Kevin Hindle)
The Brook Business Centre Complex, Bennett
Street, Manchester, M12 5AU
Tel: 0161 2731999
Fax: 0161 2737979
E-mail: sales@approvedhydraulics.co.uk
Web: www.approvedhydraulics.co.uk

MENDIP
36. Bristol Tipping Bodies (Martin Harper)
Mill Road, Radstock, Avon, BA3 5TX
Tel: 01761 420190
Fax: 01761 420183

MIDDLESEX
37. Feltham Hydraulics Supplies Ltd
(Darryl Gericke/Colin Moores)
Unit 2 Rainbow Industrial Estate,
West Drayton, Middlesex, UB7 7XT
Tel: 01895 447770
Fax: 01895 447775
E-mail: felthyd@aol.com

FAMILIARISATION

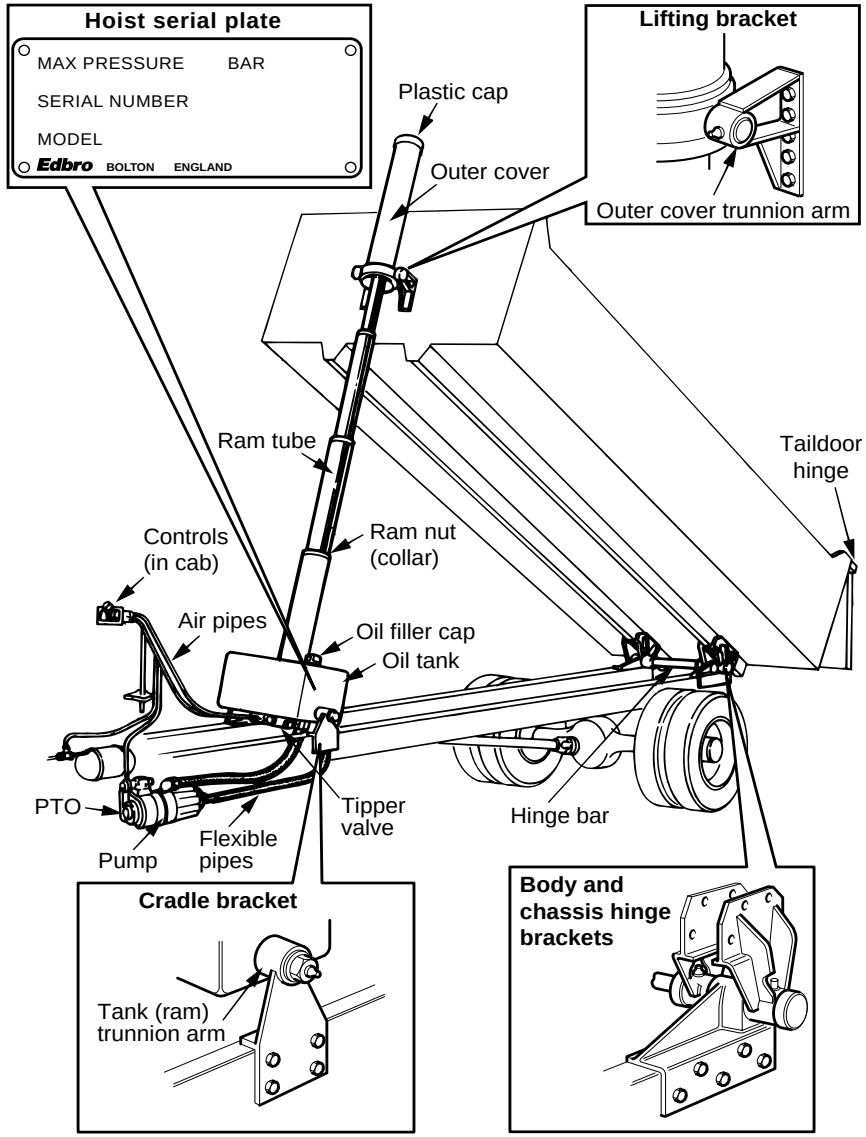

LNC hoist

FAMILIARISATION

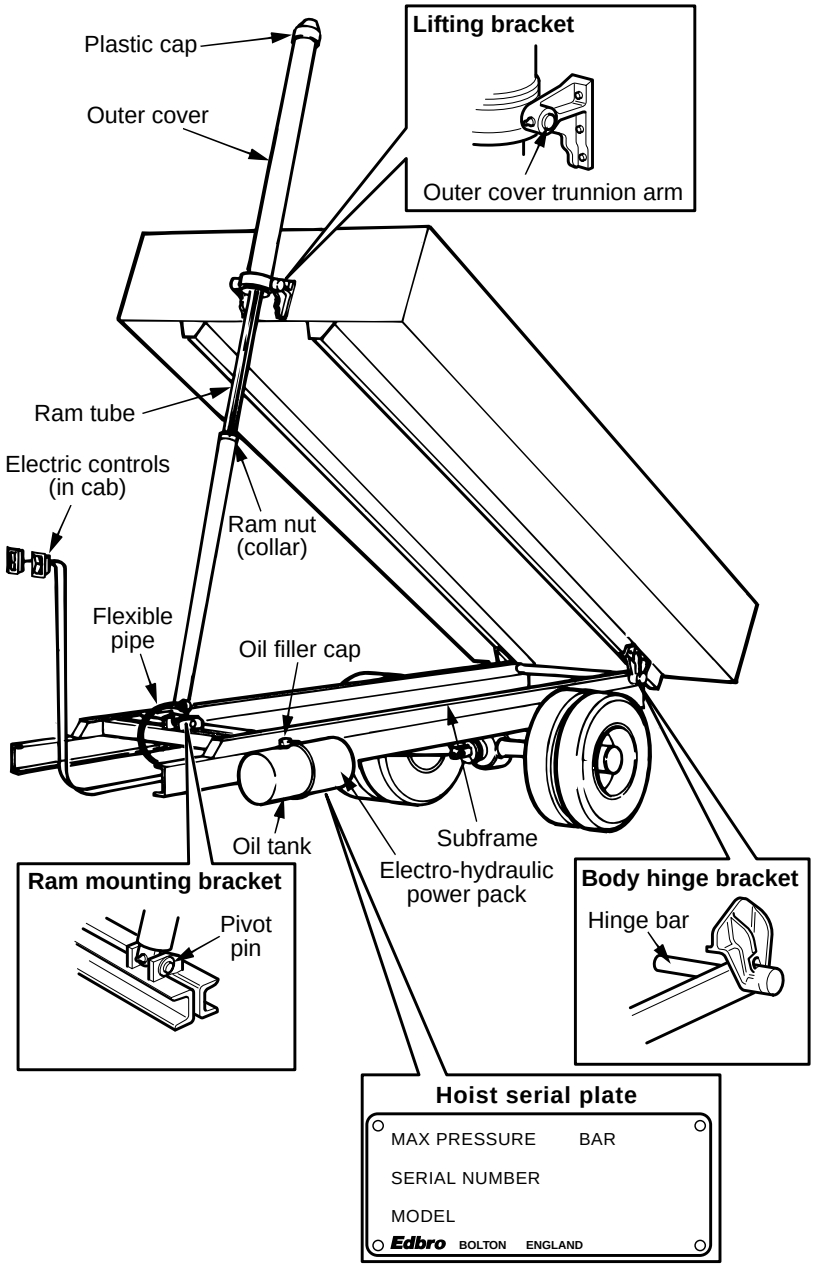

1SEC electro-hydraulic hoist

SERVICE LOCATIONS

CARLISLE
14. S J & K Holliday (Steve Holliday)
Unit A, Heathlands Industrial Estate,
Carlisle, Cumbria, CA6 4RE
Tel: 01228 672060
Fax: 01288 672062
E-mail: stevesjkh@yahoo.com

CARLOW
15. Edbro Ireland Ltd (Noel Grissin)
Kernanstown Works, O'Brien Road,
Carlow (ROI)
Tel: 059 9142529
Fax: 059 9141254
E-mail: admin@hydrohoist.ie
Web: www.hydrohoist.ie

CHELTENHAM
16. Tipweld Hydraulics
(Terry Fullwell/David Harvey)
The Council Depot, Swindon Road,
Cheltenham, GL51 9JZ
Tel: 01242 231256
Fax: 01242 236268

CHESTERFIELD
17. Spire Hydraulics Ltd
(Mike Masters/Pete Shaw)
Brimington Road North,
Chesterfield, S41 9BQ
Tel: 01246 208400
Fax: 01246 559428
E-mail: sales@spirehydraulics.co.uk
Web: www.spirehydraulics.co.uk

CROYDON
18. Thompsons (UK) Ltd (Greg Thompson)
Rutland Works, Vulcan Way, Croydon,
Surrey, CR9 0DE
Tel: 01689 843016
Fax: 01689 841574
E-mail: tippers@thompsonsuk.com
Web: www.thompsonsuk.com

DERBY
19. Imperial Commercials (Peter Tomlinson)
Ashbourne Road, Machworth,
Derby, DE22 4NB
Tel: 01332 824371
Fax: 01332 824547
Email:peter.tomlinson@imperialcommercials.co.uk
Web: www.imperialcommercials.co.uk

DEVON
20. Bulkgear Engineering
(Alan Sage/Jon Sage)
Unit C South View Estate Road, Willand,
Devon, EX15 2QW
Tel: 01884 821171
Fax: 01884 829198
E-mail: bulkgear@btconnect.com

DUBLIN
21. Griffith J Roberts Ltd
(Colin Roberts/Des Roberts/Ken Roberts)
3A Lower Grangegorman,
Dublin 7 (ROI)
Tel: 01 6777861
Fax: 01 6792187
E-mail: colin@griffithjroberts.com
Web: www.griffithjroberts.com

22. Kieran Trehy Hydraulics (Kieran Trehy)
Unit 2 Northern Cross Business Park,
Dublin 11 (ROI)
Tel: 01 8443109
Fax: 01 8644619
E-mail: dmcalister@m50truckcentre.com

DUNS
23. J E Douglas & Sons Ltd (Brian Douglas)
Station Road Industrial Estate, Duns,
Berwickshire, TD11 3HS
Tel: 01361 883411
Fax: 01361 883148
E-mail: douglasofduns@msn.com

ELGIN
24. Baillie Brothers (Truck Services) Ltd
(John Baillie/Kenny Baillie)
Linkwood Industrial Estate, Elgin,
Moray, IV30 1XB
Tel: 01343 555321
Fax: 01343 555310
E-mail: service@bailliebrothers.co.uk

FAVERSHAM
25. Hydraulic Crane Services (Rob Carter)
High Street Road, Waterham, Faversham,
Kent, ME13 9EJ
Tel: 01227 751588
Fax: 01227 751458
E-mail: hydcraneserv@aol.com

SERVICE LOCATIONS

ABERDEEN
1. Kingswell Bodybuilders
(Douglas Clarke/Fred Riddoch)
Westhill Industrial Estate, Westhill,
Aberdeenshire, AB32 6EQ
Tel: 01224 742401
Fax: 01224 744075
E-mail: sales@kingswellsbodybuilders.co.uk
Web: www.kingswellsbodybuilders.co.uk

AIRDRIE
2. Eftee Metal Bodies Ltd (David Craig)
Glencraig Street, Industrial Estate,
Airdrie, ML6 9AS
Tel: 01236 765975
Fax: 01236 747415
E-mail: efteemetals12@yahoo.co.uk

BANBRIDGE
3. Banbridge Coachworks (Eugene Elliot)
26 Half Way Road, Banbridge,
Co. Down, BT32 4ET (N. Ireland)
Tel: 028 40662376
Fax: 028 40624769
E-mail: sales@banbridgecoachworks.co.uk
Web: www.banbridgecoachworks.co.uk

BIRMINGHAM
4. Keltruck Tail Lift (Jon Gregory)
Vinculum Way (off Armstrong Way), Willenhall,
West Midlands, WV13 2RG
Tel: 01902 366446
Fax: 01902 631986
E-mail: jon.gregory@keltruck.com
Web: www.keltruck.com

5. Kingswinford Hydraulics Limited
(Frank Moran)
Alpine Works, Oak Lane, Kingswinford,
West Midlands, DY6 7JS
Tel: 01384 293545
Fax: 01384 401283
Mob: 07747 001432
E-mail: khlimited@aol.com
Web: www.kingswinfordhydraulics.com

6. Truck Engineering Ltd
(John Webster/Craig Wilson)
Unit 4, Holland Industrial Park, Darlaston,
West Midlands, WS10 BLN
Tel: 0121 5683820
Fax: 0121 5266004
E-mail: info@truckengineering.co.uk
Web: www.truckengineering.co.uk

BISHOP AUCKLAND
7. Randolph Coachworks Ltd (Ray Blyth)
Randolph Terrace, Salder Lane, Evenwood,
Co. Durham, DL14 9LQ
Tel: 01388 832560
Fax: 01388 834504
E-mail: randolphcoachworks@ukonline.co.uk

BLACKBURN
8. North West Tippers Ltd (Chris Nuttall)
Rockfield Street, Blackburn, Lancs, BB2 3RG
Tel: 01254 55441
Fax: 01254 665015
E-mail: stephen@northwesttippers.co.uk

BOLTON
9. Hydraulic Spares Centre Ltd (Michael Booth)
Unit 18, Pilot Industrial Estate, Bolton,
Lancs, BL3 2ND
Tel: 01204 527594
Fax: 01204 383037
E-mail: hydsc@tiscali.co.uk

BRADFORD
10. J B K Hydraulic Services (John Kendal)
55 Ceder Drive, Wilson Road, Bradford,
West Yorks, BD12 9HL
Tel: 01274 602869
Mob: 07860 365930

BRISTOL
11. Kingswood Commercial Bodies Ltd
(Mike Edwards)
Bridge Road, Kingswood, Bristol,
Avon, BS15 4PW
Tel: 0117 9570007
Fax: 0117 9701652
E-mail: kingswoodcomm@btconnect.com

12. Micklegate Engineering Ltd (Paul Gibson)
Unit 6 Waverley Trading Estate, Bath Road,
Bristol, Avon, BS4 5NL
Tel: 0117 9770955
Fax: 0117 9770911
E-mail: paul.gibson@micklegateeng.co.uk
Web: www.micklegateeng.co.uk

CARDIFF
13. Transport Hydraulics Ltd
(Paul Evans/Malcolm Thomas)
Dumballs Road, Cardiff,
South Glamorgan, CF1 6JE
Tel: 02920 481616
Fax: 02920 48825013

SAFETY

Tipping is always hazardous and sometimes dangerous.

Vehicles can be overturned by sticking loads, poor ground conditions, high cross winds or bad practices such as tipping on a side slope. So:

- do not tip until you have read and understood this manual
- remember the hoist (tipping gear) is designed to lift; it is not a stabiliser
- if the vehicle overturns, any damage to the hoist is the RESULT and not the CAUSE of the turnover
- avoid accidents by following the safety code on pages 6 and 7
- it is the responsibility of the operator to ensure that drivers are suitably trained in the use of this equipment.

OPERATING PRESSURE

This hoist must only be operated up to the maximum pressure shown on the identification plate of 120 bar (1,750psi).

NEVER TRY TO ALTER THE PRESSURE SETTING OF THE RELIEF (OVERLOAD) VALVE. The valve is preset at the factory.

SAFETY CODE

ALWAYS

- keep your tyres at the correct pressures
- spread your load evenly in the body
- before tipping make sure your truck is on firm, level ground
- during tipping, stay at the controls; if danger signs develop (for example, if the body starts to lean to one side or the load sticks) immediately lower the body
- prevent the discharging load from piling up and fouling on the taildoor by driving forward VERY SLOWLY BY NO MORE THAN A METRE AT A TIME
- make sure the danger area is clear of people and obstructions (refer opposite)
- just before loading, move the control lever to lower to ensure that no oil is trapped in the cylinder and the full load rests on the chassis

EXTRA CAUTION

Be particularly careful in frosty weather. Frost can cause wet loads to stick and discharge unevenly.

NEVER

- overload
- alter the pressure setting of the relief (overload) valve
- put the tipper lever in 'tip'(unless you are actually tipping)
- tip in high winds
- tip on a side slope
- shake the load free
- drive off with the body up or the PTO engaged. This could damage the equipment
- leave the body up overnight
- leave the truck with the ignition key in
- go under a raised LOADED body
- go under a raised EMPTY body (unless it is propped)
- tip with the body within 5 metres of overhead power lines
- steam clean the exposed cylinder tubes, this will cause corrosion
- climb on the equipment by any

SPARE PARTS & SERVICE

Use only genuine Edbro parts from Edbro service dealers (refer following list pages 20-24 and location map).

Always quote the component part number and serial number when ordering parts or seeking advice.

PROBLEM SOLVING

THE BODY STOPS ON THE WAY UP

Lower the body as slowly as possible. Then make sure:

- the body is not overloaded or badly distributed
- the oil in the tank is up to dipstick level (refer page 16).

THE BODY WILL NOT STAY UP WITH THE TIPPER LEVER IN 'HOLD'

Put the tipper back in 'raise' and lift the body. Then:

- rev the engine until the relief (overload) valve blows, i.e. until you hear a high pitched noise coming from the tipper valve (page 3) or the power pack (page 4)
- keep the engine revs going for five seconds
- put the tipper lever in 'hold'.

If the body still will not stay up, lower the body.

EXCESSIVE NOISE

- check the oil level
- check pipes for kinks and leaks.

SAFETY CODE

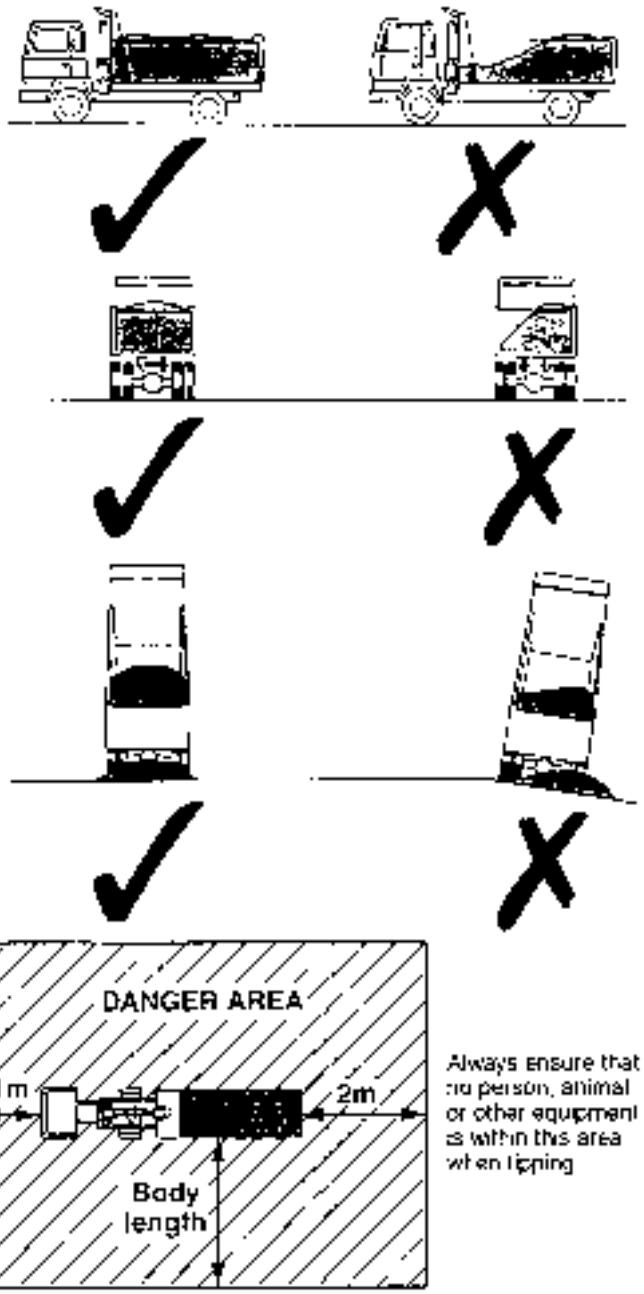

CONTROLS

means other than that provided by the bodybuilder.
Your Edbro hoist works best if the vehicle is fitted with matching Edbro hydraulics (PTO, pump, valves, oil tank, pipes and controls).

The PTO and tipper controls are combined in one unit and work off the vehicle's air system (fig. a).

The PTO control switch is fitted with a PTO engaged warning light.

The tipper control is a lever with four safety features:

- a spring-loaded device stops it from being accidentally moved into 'raise' or 'lower'
- a spring return to 'hold' from 'raise' position, known as a deadman's handle function, ensures the driver keeps his hand on the tipper control ***all the time*** the body is being raised
- when the lever is moved from 'hold' towards 'lower', the PTO is *automatically disengaged; this internal mechanical feature prevents PTO, pump or gearbox damage if you forget to disengage the PTO before driving off
- controlled lowering (feathering) regulates speed of descent for loaded or part-loaded bodies.

This type of control is recommended for conformity with European standards. Other controls are available but, if used, the bodybuilder will need to ensure that all Essential Safety Requirements are covered by other means. For example, separate controls are available (fig. b).

*Alternative combined controls ***without*** automatic PTO disengagement feature (for spreading or static discharge applications) are available.

CONTROLS FOR 1SEC ELECTRO-HYDRAULIC HOISTS

The electric controls (fig. d) work from the truck's battery and have three safety features:

- a seperate isolator switch stops the tipper control from being accidently operated

PROBLEM SOLVING

The following action can be taken without special tools. If unsuccessful, call your nearest Edbro service dealer (refer list pages 20-24).

THE BODY WILL NOT TIP

Make sure:

- the vehicle air pressure has had enough time to build up (see vehicle operator's manual)
- the oil in the tank is up to dipstick level (refer page 16)
- the PTO switch is 'in' and PTO is engaged (oil is circulating)
- the tipper lever is in 'raise'
- there are no kinks in the oil pipes
- no air is leaking from the air pipes.

THE BODY WILL NOT LOWER

Check PTO has disengaged and warning light is out.

Put the tipper lever back in 'raise'. Then:

- rev the engine until the relief (overload) valve blows, i.e. until you hear a high pitched noise coming from the tipper valve (page 3) or the power pack (page 4)
- keep the engine revs going for five seconds
- lower the body (page 11).

If the body still will not come down, put the tipper lever in 'hold', PROP THE BODY, switch the PTO to 'out' and turn off the engine.

OIL

Dirty oil is the enemy of a hydraulic system. The cleaner the oil, the more efficient the hoist's operation and the longer it's life. So always use clean hydraulic oil for topping up or changing the oil in the tank.

Use oil to specification ISO6734/4 HM32 for temperatures between -20°C to +30°C. Typical suitable trade names are:

CASTROL	AWS32
ESSO	VG32
GULF	HYDRASIL 32
MOBIL	DTE24
SHELL	TELLUS 32

For other climates seek advice from your local distributor or direct from Edbro.

Never put used oil in the tank.

To determine the oil level, remove the filler cap and check that the level is within the max./min. marks as shown:

Correct oil level:
- not above green mark on dipstick
- not below red mark on dipstick

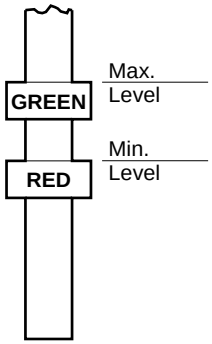

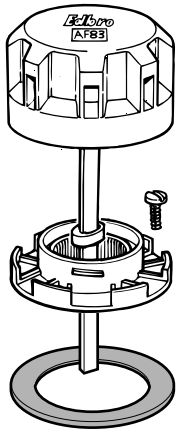

Edbro combined filler/breather assembly

CONTROLS

- a warning light comes on when the isolator is switched on
- the tipper control is a deadman's rocker switch so if you take your finger off the switch, the body will stop going up or coming down.

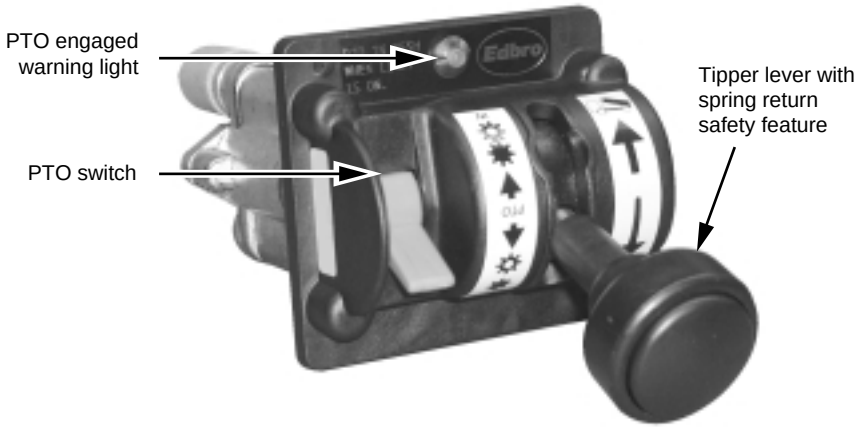

Fig. a. **Combined PTO & tipper air controls**



Fig. b. **Separate tipper air control**

HOW TO LIFT THE BODY

Make sure the handbrake is on, the gear lever is in neutral, the tipper lever is in 'hold' and the PTO switch is 'out'. Then:

- unlock the taildoor (taking care to stand clear)
- return to the cab, start the engine and make sure the air pressure is at the level recommended by the manufacturer
- remain in the cab until the tipping operation is complete
- depress the clutch* and wait 4 seconds (8 seconds for a ZF gearbox with a rear mounted PTO)
- press the safety latch and switch the PTO 'in' (the warning light will come on)
- release the clutch
- make sure no-one is within the danger area (see page 7)
- move the tipper lever to 'raise' and hold in position. Releasing pressure on the lever will stop the body lifting
- raise the body SMOOTHLY by varying the engine revs N**EVER EXCEED 1100rpm**
- prevent the discharging load from piling
- prevent the discharging load from piling up and fouling the taildoor by driving forward VERY SLOWLY BY NO MORE THAN A METRE AT A TIME
- when the body gets to the tipping angle you want, release the tipper lever to 'hold'
- if you need to spread the load, release the handbrake and drive forward VERY SLOWLY.

* If you have an automatic gearbox, the PTO operation will be different. Refer to the PTO installer for specific instructions.

HOW TO LIFT THE BODY WITH A 1SEC ELECTRO-HYDRAULIC HOIST

Make sure the handbrake is on, the gear lever is in neutral and the engine is running. Then:

- unlock the taildoor (taking care to stand clear)
- switch on the isolator (the warning light will come on)
- make sure no-one is within the danger area (see page 7)
- press, and keep pressing the 'up' arrow on the tipper control
- when the body gets to the tipping angle you want, release the tipper control
- if you need to spread the load, release the handbrake and drive forward VERY SLOWLY.

MAINTENANCE

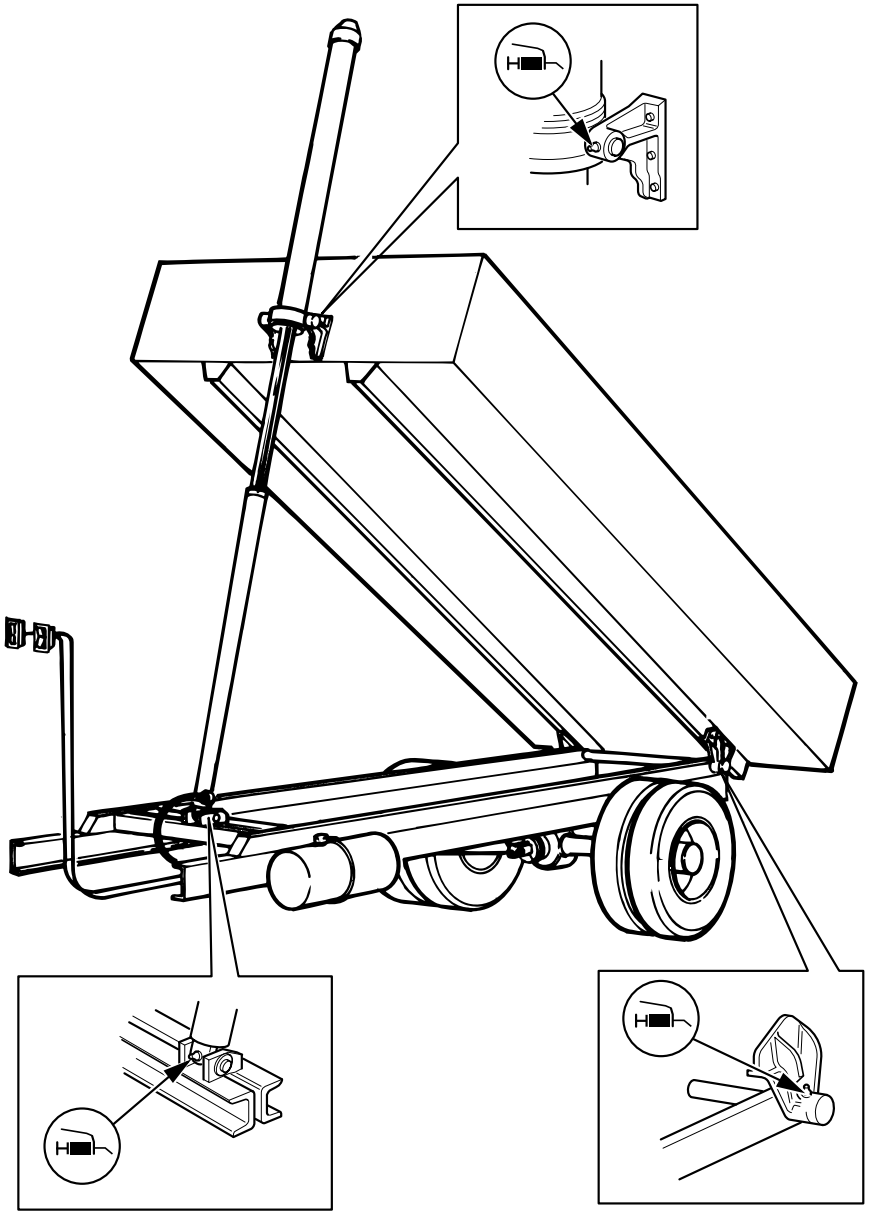

MAINTENANCE

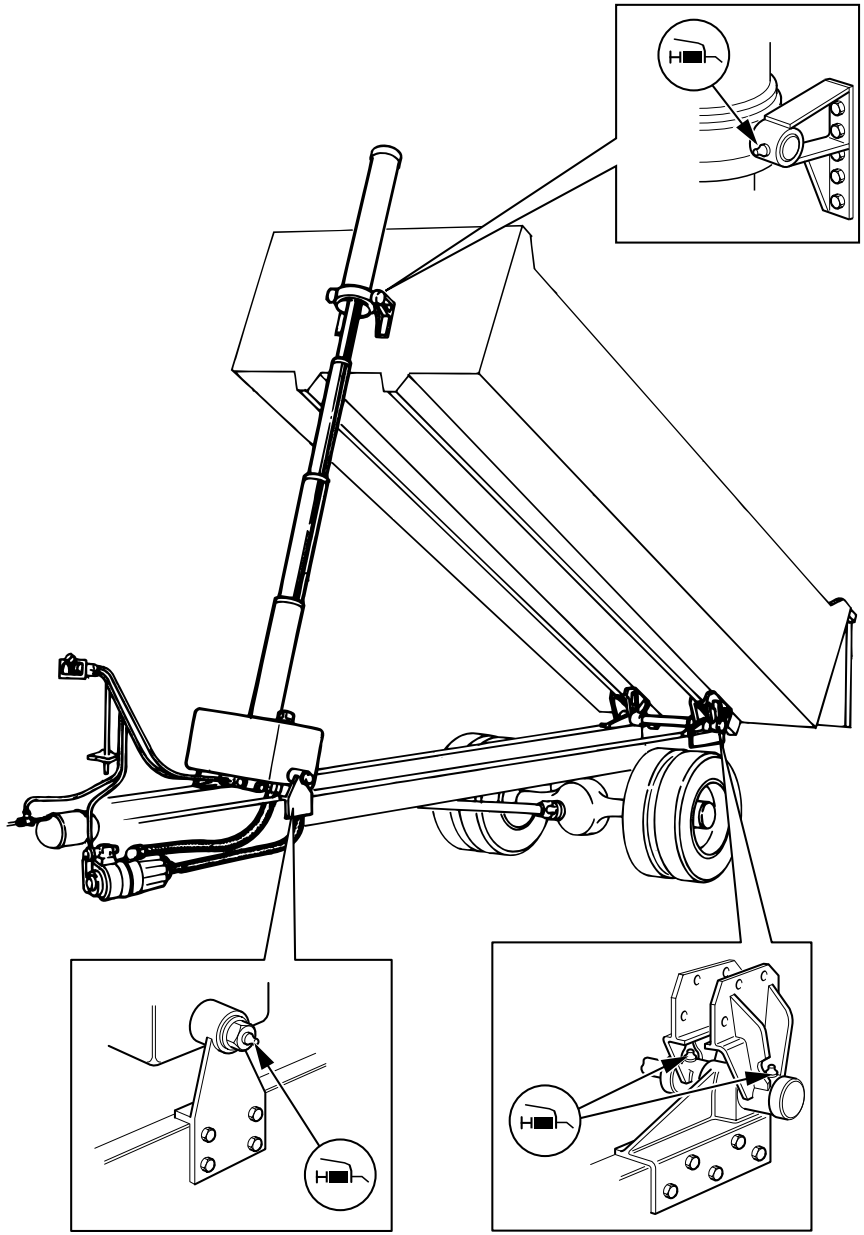

HOW TO LOWER THE BODY

Make sure that no-one is in the danger area (see page 7). Then:

- SLOWLY move the tipper lever out of 'hold' towards 'lower'; this will automatically disengage the PTO and the warning light will go out. If automatic PTO disengagement is not fitted, switch the PTO to 'out' before driving off
- regulate the speed the body comes down by moving the lever towards 'hold' to slow it down or towards 'lower' to speed its descent
- when the body is down, move the lever back to 'hold'
- lock the taildoor

⚠ DO NOT DRIVE OFF UNTIL THE BODY IS FULLY DOWN. MAKE SURE THAT THE PTO IS DISENGAGED BEFORE DRIVING OFF.

HOW TO LOWER THE BODY WITH A 1SEC ELECTRO-HYDRAULIC HOIST

Make sure no-one is in the danger area. Then:

- press, and keep pressing the 'down' arrow on the tipper control
- when the body is down, release the tipper control
- switch off the isolator (the warning light will go out)
- lock the taildoor.

⚠ DO NOT DRIVE OFF UNTIL THE BODY IS FULLY DOWN.

WHEN DRIVING

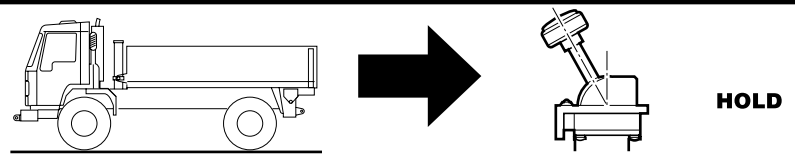

When UNLADEN leave the cab control in HOLD to minimise body bounce.

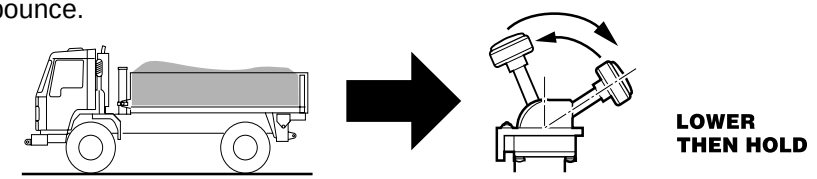

When LADEN leave the cab control in LOWER to ensure that no oil is

SAFETY DURING MAINTENANCE

trapped in the cylinder and the entire load rests on the chassis.
A body prop is considered by Edbro to be an Essential Safety Requirement. A prop must always be used if maintenance needs to be undertaken with the body raised.

- never attempt to prop a loaded body
- use a prop designed to locate securely between the body underframe and chassis
- the prop must be between body and chassis, not between the body and the ground
- lower the body gently onto the prop to minimise damage
- confirm that the prop is sufficiently strong to carry the bodyweight.

⚠ IT IS THE OPERATOR'S RESPONSIBILITY TO ENSURE THAT ONLY FULLY TRAINED PERSONNEL REPAIR OR SERVICE THIS EQUIPMENT. IF NECESSARY, CONTACT YOUR LOCAL SERVICE AGENT FOR ASSISTANCE.

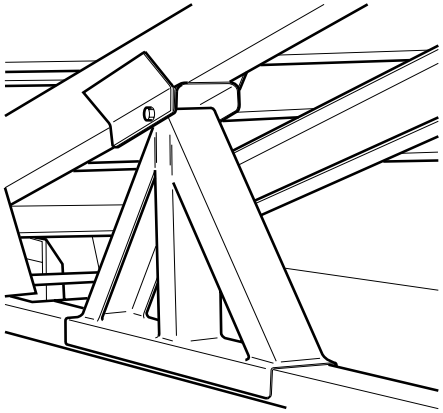

Typical body-prop arrangement

MAINTENANCE

MONTHLY

Make sure the body is down, the handbrake is on and the engine is switched off. Then top up the oil in the tank to dipstick level with clean hydraulic oil (refer page 16).

Use a grease gun to lubricate the points shown in the inset diagrams on pages 14 or 15 with a good quality, multi-purpose grease.
Grease the taildoor hinge and locking mechanism.
Replace any worn or damaged flexible pipes.
Make sure all flexible pipes are secured to the chassis and are not hanging loose.
Check the outer cover fixing is tight.
Tighten any loose pipe connections.

Check and tell your Edbro service dealer if:

- the outer cover (where applicable) is loose (side-to-side or rotating)
- any ram tube or ram nuts (collars) are damaged
- any ram nuts are loose
- the tank (ram) trunnion arms, the outer cover trunnion arms, the body or chassis hinge brackets are worn
- oil is leaking from the ram tubes, tipper valve, PTO, pump or flexible pipes
- air is leaking from the air pipes
- air is leaking CONTINUOUSLY from the controls.

THREE MONTHLY
Use spanners to check the tightness of the fixing bolts on the tipper valve, PTO, brackets and subframe (where fitted).

YEARLY (more often in dusty or dirty conditions)
Drain and refill the tank with clean hydraulic oil (refer page 16). In order to protect the environment, ensure that no oil is spilled when draining, and old oil is disposed of correctly.

Depending on the specification of your equipment, other maintenance checks may be required. These should be advised by the bodybuilder/ installer.