K201-10

KITZ







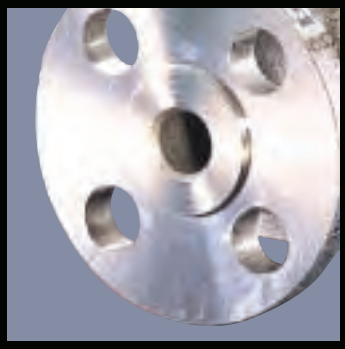

Steel Ball Valves

KITZ CORPORATION OF AMERICA

KITZ Steel Ball Valves
Floating Ball Design

Contents

2 Design and Inspection Standards
2 KITZ Product Coding
3 Product Range
7 Design Features
10 KITZ HYPATITE® PTFE Ball Seats
11 Low Emission Design Features
13 Pressure-Temperature Ratings
15 Class 150 / 300 Cast Steel Ball Valves
23 Class 600 / 1500 Carbon Steel Ball Valves
25 Class 150 / 300 Cast Stainless Steel Ball Valves
32 Class 600 / 1500 Cast Stainless Steel Ball Valves
34 Class 150 / 300 Cryogenic Ball Valves
40 Type 2000 Carbon Steel Ball Valves
50 Type 600 Carbon Steel Ball Valves
51 Type 1500 Carbon Steel Ball Valves
63 Type 2000 Stainless Steel Ball Valves
73 Type 600 Stainless Steel Ball Valves
74 Type 800 Stainless Steel Ball Valves
75 Type 1500 Stainless Steel Ball Valves
87 Type 1500 Carbon Steel Ball Valves
99 Type 1500 Stainless Steel Ball Valves
111 Construction and Materials

Technical Information
119 Technical Features of KITZ HYPATITE® PTFE Ball Seats
121 Fire Test Standards
123 General Precautions
124 Flow Characteristics
125 Steel Pipe Flanges

The products introduced in this catalog are all covered by ISO 9001 and 9002 certification awarded KITZ Corporation, KITZ Corporation of Europe, S.A. and KITZ Corporation of Taiwan.

Design and Inspection Standards of KITZ Flanged Ball Valves

Item		American Standards	British Standards
Pressure-temperature ratings	Body	ASME B16.34	BS 5351
	Resilient sealing parts	KITZ Standard	
General valve design		API 608	BS 5351
Shell wall thickness		ASME B16.34	BS 5351
Face-to-face dimensions		ASME B16.10	BS 2080*1
End flange dimensions and flange gasket facing		ASME B16.5	BS 1560
Pressure test		API 598 or API 6D*2	BS 6755 Part 1*2
Fire test		API 607 and API 6FA	BS 6755 Part 2

*1 Option for 2" to 4" Class 150 full port design.
*2 Option.

Product Coding for KITZ Flanged Ball Valves

		150	U	T	A	M			
Example	G-	150	SC	T	BZ		M	- FS	(C)
	1	2	3	4	5	3A	6	7	8

1 Valve operation measure
None ... Lever handle
G ..... Worm gear
E ..... Electric actuator
B ..... KITZ Type B double action pneumatic actuator
BS ..... KITZ Type BS spring return pneumatic actuator
FA ..... KITZ Type FA double action pneumatic actuator
FAS ..... KITZ Type FAS spring return pneumatic actuator

2 ASME pressure class
150, 300, 600 or 1500

3 Shell material
SC ..... Carbon or low alloy steel
U ..... Stainless or high alloy steel

3A Shell material
An additional symbol is suffixed here, if other than WCB or CF8 is employed for shell material, such as:
M CF8M
V CF3
BL ..... LCB
CL LCC

O CF3M
CB CF8M
CN CN7M
1L LC1
2L LC2
3L LC3

4 Symbol for ball valves

5 Valve design
BZ ..... Full port, split body with ISO / CAPI actuator mounting pad
B ..... Full port, split body with KITZ actuator mounting pad
A ..... Regular port, uni-body with ISO / CAPI actuator mouting pad

6 Trim material for carbon steel valves
No symbol for 304 s/s trim.
"M" for 316 s/s trim.

7 "FS" For Flexible graphite packing and gasket for super-fire-safe provision in accordance with API607
No symbol for PTFE packing gasket.

8 "(C)" for CAPI configuration.

Design and Inspection Standards of KITZ Threaded Ball Valves

Item		American Standards
Pressure-temperature ratings	Body	ASME B16.34
	Resilient sealing parts	KITZ Standard
Shell wall thickness		ASME B16.34*1
Face-to-face dimensions		KITZ Standard
End connections	Threaded	ASME B1.20.1
	Socket Weld	ASME B16.11
	Buttweld	B16.25
Pressure test		API 598
Fire test		API 607

*1 Except AKSCTKM (50), AKUTKM (52) and AKUTHM (53) which are KITZ standard

Product Coding for KITZ Threaded Ball Valves

	AK	SC	T	K		Z	M	- FS	O
Example	AK	U	T	H	W	Z	M		
	AW	SC	3T	F		Z	M	- FS	
	1	2	3	4	9	5	6	7	8

1 End connection
AK ..... Tapered NPT (ASME B1.20.1)
AW ..... Socket Weld (ASME B16.11)
BW ..... Buttweld (ASME B16.25)
AK/AW ..... Threaded x Socket Weld

2 Shell material
SC ..... Carbon Steel
U ..... Stainless Steel

3 Valve Type
T ..... Floating Ball
3T 3-PC

4 Port design
K ..... Reduced
H ..... Regular
F ..... Full

5 Mounting pad
Z ..... Integral (ISO-5211 on 3-pc)

6 Trim (Ball and stem)
M 316SS

7 Options
FS ..... Fire Tested per API 607

8 Operator
( ) ..... Locking Lever
O ..... Locking Oval

9 Special Features
W ..... Seal Welded

Product Range

Materail	Figure	Code No.	Class	Type	Port	Ends		Body
Cast Steel	150SCTBZM (C)		150	Low Emission Level• •(Max.100ppm.)	Full	Flanged••••••• ASME B16.5	Anti-Static Device	A216 Gr.WCB
	150SCTBZM-FS (C)						Fire Safe	
	G-150SCTBZM (C)						Anti-Static Device	
	G-150SCTBZM-FS (C)						Anti-Static Device	
	150SCTAM (C)				Regular		Fire Safe	
	150SCTAM-FS (C)						Anti-Static Device	
	150SCTAM (C)			Low Emission Level• •(Max.100ppm.)			Anti-Static Device	
	150SCTAM-FS (C)						Fire Safe	
	300SCTBZM (C)		300		Full		Anti-Static Device	
	300SCTBZM-FS (C)						Anti-Static Device	
	G-300SCTBZM (C)						Fire Safe	
	G-300SCTBZM-FS (C)						Anti-Static Device	
	300SCTAM (C)				Regular		Anti-Static Device	
	300SCTAM-FS (C)						Fire Safe	
	300SCTAM (C)			Low Emission Level• •(Max.100ppm.)			Anti-Static Device	
	300SCTAM-FS (C)						Fire Safe	
Carbon Steel	600SCTBM		600		Full		Anti-Static Device	A105
	600SCTBM-FS						Fire Safe	
	1500SCTBM		1500				Anti-Static Device	A216 Gr. WCB
	1500SCTBM-FS						Fire Safe	
Cast Stainless Steel	150UTBZM (C)		150	Low Emission Level• •(Max.100ppm.)	Full	Flanged••••••• ASME B16.5	Anti-Static Device	A351 Gr.CF8M
	150UTBZM-FS (C)						Fire Safe	
	G-150UTBZM (C)						Anti-Static Device	
	150UTAM (C)				Regular		Anti-Static Device	
	150UTAM-FS (C)						Fire Safe	
	150UTAM (C)			Low Emission Level• •(Max.100ppm.)			Anti-Static Device	
	150UTAM-FS (C)						Fire Safe	
	300UTBZM (C)		300	Low Emission Level• •(Max.100ppm.)	Full		Anti-Static Device	
	300UTBZM-FS (C)						Fire Safe	
	300UTAM (C)				Regular		Anti-Static Device	
	300UTAM-FS (C)						Fire Safe	
	300UTAM (C)			Low Emission Level• •(Max.100ppm.)			Anti-Static Device	
	300UTAM-FS (C)						Fire Safe	
Stainless Steel	600UTBM		600		Full		Anti-Static Device	
	600UTBM-FS						Fire Safe	
	1500UTBM		1500				Anti-Static Device	
	1500UTBM-FS						Fire Safe	
Cast Stainless Steel	150UTALM		150	Cryogenic	Regular		Anti-Static Device	
	G-150UTALM							
	300UTALM		300					
	G-300UTALM							

Stem	Ball	Gasket	Ball Seat	3/8"	1/2"	3/4"	1"	1 1/4"	1 1/2"	2"	2 1/2"	3"	4"	5"	6"	8"	10"	Page
A276 Type 316	A351 Gr. CF8M/ A276 Type 316	PTFE	HYPATITE PTFE*	•	•	•	•	•	•	•	•	•	•	•	•	•	•	15
		Flexible Graphite		•	•	•	•	•	•	•	•	•	•	•	•	•	•	15
	A351 Gr. CF8M	PTFE		•	•	•	•	•	•	•	•	•	•	•	•	•	•	16
		Flexible Graphite		•	•	•	•	•	•	•	•	•	•	•	•	•	•	16
	A276 Type 316	PTFE		•	•	•	•	•	•	•	•	•	•	•	•	•	•	17
		PTFE Flexible Graphite		•	•	•	•	•	•	•	•	•	•	•	•	•	•	17
A276 Type 316 A479/A479M Type 316	A276 Type 316/ A351 Gr. CF8M	PTFE		•	•	•	•	•	•	•	•	•	•	•	•	•	•	18
		PTFE Flexible Graphite		•	•	•	•	•	•	•	•	•	•	•	•	•	•	18
A276 Type 316	A351 Gr.CF8M/ A276 Type 316	PTFE		•	•	•	•	•	•	•	•	•	•	•	•	•	•	19
		Flexible Graphite		•	•	•	•	•	•	•	•	•	•	•	•	•	•	19
	A351 Gr.CF8M	PTFE		•	•	•	•	•	•	•	•	•	•	•	•	•	•	20
		Flexible Graphite		•	•	•	•	•	•	•	•	•	•	•	•	•	•	20
	A276 Type 316	PTFE		•	•	•	•	•	•	•	•	•	•	•	•	•	•	21
		PTFE Flexible Graphite		•	•	•	•	•	•	•	•	•	•	•	•	•	•	21
A276 Type 316 A479/A479M Type 316	A276 Type 316/ A351 Gr. CF8M	PTFE		•	•	•	•	•	•	•	•	•	•	•	•	•	•	22
		PTFE Flexible Graphite		•	•	•	•	•	•	•	•	•	•	•	•	•	•	22
A276 Type 316	A276 Type 316	Grafoil Spiral Wound	G/F MoS_2 PTFE	•	•	•	•	•	•	•	•	•	•	•	•	•	•	23
				•	•	•	•	•	•	•	•	•	•	•	•	•	•	23
		Grafoil Spiral Wound	MoS_2 Nylon	•	•	•	•	•	•	•	•	•	•	•	•	•	•	24
				•	•	•	•	•	•	•	•	•	•	•	•	•	•	24
A276 Type 316	A351 Gr. CF8M/ A276 Type 316	PTFE	HYPATITE PTFE®	•	•	•	•	•	•	•	•	•	•	•	•	•	•	25
		Flexible Graphite		•	•	•	•	•	•	•	•	•	•	•	•	•	•	25
	A351 Gr. CF8M	PTFE		•	•	•	•	•	•	•	•	•	•	•	•	•	•	26
	A276 Type 316	PTFE		•	•	•	•	•	•	•	•	•	•	•	•	•	•	27
		Flexible Graphite		•	•	•	•	•	•	•	•	•	•	•	•	•	•	27
A276 Type 316 A479/A479M Type 316	A276 Type 316/ A351 Gr. CF8M	PTFE		•	•	•	•	•	•	•	•	•	•	•	•	•	•	28
		PTFE Flexible Graphite		•	•	•	•	•	•	•	•	•	•	•	•	•	•	28
A276 Type 316	A351 Gr. CF8M/ A276 Type 316	PTFE		•	•	•	•	•	•	•	•	•	•	•	•	•	•	29
		PTFE Flexible Graphite		•	•	•	•	•	•	•	•	•	•	•	•	•	•	29
	A276 Type 316	PTFE		•	•	•	•	•	•	•	•	•	•	•	•	•	•	30
		PTFE Flexible Graphite		•	•	•	•	•	•	•	•	•	•	•	•	•	•	30
A276 Type 316 A479/A479M Type 316	A276 Type 316/ A351 Gr. CF8M	PTFE		•	•	•	•	•	•	•	•	•	•	•	•	•	•	31
		PTFE Flexible Graphite		•	•	•	•	•	•	•	•	•	•	•	•	•	•	31
A276 Type 316	A276 Type 316	Grafoil Spiral Wound	G/F MoS_2 PTFE	•	•	•	•	•	•	•	•	•	•	•	•	•	•	32
				•	•	•	•	•	•	•	•	•	•	•	•	•	•	32
		Grafoil Spiral Wound	MoS_2 Nylon	•	•	•	•	•	•	•	•	•	•	•	•	•	•	33
				•	•	•	•	•	•	•	•	•	•	•	•	•	•	33
A564 Type 630	A276 Type 316/ A351 Gr. CF8M	PTFE Flexible Graphite	HYPATITE PTFE®	•	•	•	•	•	•	•	•	•	•	•	•	•	•	34 35
				•	•	•	•	•	•	•	•	•	•	•	•	•	•	36
	A276 Type 316/ A479 Type 316/ A351 Gr. CF8M			•	•	•	•	•	•	•	•	•	•	•	•	•	•	37 38
				•	•	•	•	•	•	•	•	•	•	•	•	•	•	39

Materail	Figure	Code No.	Class	Type	Port	Ends		Body
Carbon Steel	AKSCTKZM-FS	119	2000...1/4"-1" 1500...1 1/4-2"	Actuator Mounting Pad	Reduced	Screwed•••••• ASME B 1.20.1	Fire Safe per API607 Anti-Static Device	A216 Gr.WCB
	AKSCTKZM-FSO	119-LOH						
	AKSCTHZM	217		Two Piece Actuator Mounting Pad	Regular			
	AKSCTHZM-O	217-LOH						
	AKSCTHZM-FS	219		Actuator Mounting Pad			Fire Safe	
	AKSCTHZM-FSO	219-LOH						
	AKSCTHWZM	237		Seal Welded Actuator Mounting Pad			Anti-Static Device	
	AKSCTHWZM-O	237-LOH						
	AKSCTHWZM-FS	239					Fire Safe per API607	
	AKSCTHWZM-FSO	239-LOH						
	AKSCTKM	50	600					
	AKSC3TFZM-O	317F-LOH	1500...1/4"-1 1/2" 1000...2"	Three Piece ISO 5211 Actuator Mouting Pad	Full		Anti-Static Device	
	AKSC3TFZM	317F						
	AKSC3THZM-O	317-LOH	1500...1/2"-2" 1000...21/2"		Regular			
	AKSC3THZM	317						
	AKSC3TFZM-FSO	319F-LOH	1500...1/4"-1 1/2" 1000...2"		Full			
	AKSC3TFZM-FS	319F						
	AKSC3THZM-FSO	319-LOH	1500...1/2"-2" 1000...21/2"		Regular		Fire Safe Anti-Static Device	
	AKSC3THZM-FS	319						
Stainless Steel	AKUTKZM-FS	129-LOH	2000...1/4"-1" 1500...1 1/4-2"	Actuator Mounting Pad	Reduced	Screwed•••••• ASME B 1.20.1	Fire Safe per API607 Anti-Static Device	A351 Gr.CF8M
	AKUTKZM-FSO	129-LOH						
	AKUTHZM	227		Two Pieces Actuator Mounting Pad	Regular			
	AKUTHZM-O	227-LOH						
	AKUTHZM-FS	229					Fire Safe per API607	
	AKUTHZM-FSO	229-LOH						
	AKUTHWZM	247		Seal Weld Actuator Mounting Pad				
	AKUTHWZM-O	247-LOH						
	AKUTHWZM-FS	249					Fire Safe per API607	
	AKUTHWZM-FSO	249-LOH						
	AKUTKM	52	600		Reduced			
	AKUTHM	53	800		Regular			
	AKU3TFZM-O	327F-LOH	1500...1/4"-1 1/2" 1000...2"	Three Piece ISO 5211 Actuator Mouting Pad	Full		Anti-Static Device	
	AKU3TFZM	327F						
	AKU3TFZM-FSO	329F-LOH					Fire Safe Anti-Static Device	
	AKU3TFZM-FS	329F						
	AKU3THZM-O	327-LOH	1500...1/2"-2" 1000...21/2"		Regular		Anti-Static Device	
	AKU3THZM	327						
	AKU3THZM-FSO	329-LOH					Fire Safe Anti-Static Device	
	AKU3THZM-FS	329						
Carbon Steel	BWSC3TFZM-O	317FB-LOH	1500...1/4"-1 1/2" 1000...2"	Three Piece ISO 5211 Actuator Mouting Pad	Full	Buttwelding•••••• ASME B 16.25	Anti-Static Device	A216 Gr.WCB
	BWSC3TFZM	317FB						
	BWSC3THZM-O	317B-LOH	1500...1/2"-2" 1000...21/2"		Regular			
	BWSC3THZM	317B						
	BWSC3TFZM-FSO	319FB-LOH	1500...1/4"-1 1/2" 1000...2"		Full		Fire Safe Anti-Static Device	
	BWSC3TFZM-FS	319FB						
	BWSC3THZM-FSO	319B-LOH	1500...1/2"-2" 1000...21/2"		Regular			
	BWSC3THZM-FS	319B						
Stainless Steel	BWU3TFZM-O	327FB-LOH	1500...1/4"-1 1/2" 1000...2"		Full		Anti-Static Device	A351 Gr.CF8M
	BWU3TFZM	327FB						
	BWU3THZM	327B-LOH	1500...1/2"-2" 1000...21/2"		Regular			
		327B						
	BWU3TFZM-FSO	329FB-LOH	1500...1/4"-1 1/2" 1000...2"		Full		Fire Safe Anti-Static Device	
	BWU3TFZM-FS	329FB						
	BWU3THZM-FSO	329B-LOH	1500...1/2"-2" 1000...21/2"		Regular			
	BWU3THZM-FS	329B						

Stem	Ball	Gasket	Ball Seat	1/4"	3/8"	1/2"	3/4"	1"	1 1/4"	1 1/2"	2"	2 1/2"	3"	4"	5"	6"	8"	Page
A276 Type 316	A276 Type 316		HYPATITE PTFE®	•	•	•	•	•	•	•	•	•						40
				•	•	•	•	•	•	•	•	•						41
		PTFE		•	•	•	•	•	•	•	•	•						42
		PTFE		•	•	•	•	•	•	•	•	•						43
		Flexible Graphite		•	•	•	•	•	•	•	•	•						44
		Flexible Graphite		•	•	•	•	•	•	•	•	•						45
				•	•	•	•	•	•	•	•	•						46
				•	•	•	•	•	•	•	•	•						47
				•	•	•	•	•	•	•	•	•						48
				•	•	•	•	•	•	•	•	•						49
	A276 Type 316			•	•	•	•	•	•	•	•	•						50
	A276 Type 316/ A351 Gr. CF8M	PTFE		•	•	•	•	•	•	•	•	•						51
				•	•	•	•	•	•	•	•	•						52 53
				•	•	•	•	•	•	•	•	•						54
				•	•	•	•	•	•	•	•	•						55 56
		Flexible Graphite		•	•	•	•	•	•	•	•	•						57
				•	•	•	•	•	•	•	•	•						58 59
				•	•	•	•	•	•	•	•	•						60
				•	•	•	•	•	•	•	•	•						61 62
A276 Type 316	A276 Type 316		HYPATITE PTFE®	•	•	•	•	•	•	•	•	•						63
				•	•	•	•	•	•	•	•	•						64
		PTFE		•	•	•	•	•	•	•	•	•						65
				•	•	•	•	•	•	•	•	•						66
		Flexible Graphite		•	•	•	•	•	•	•	•	•						67
				•	•	•	•	•	•	•	•	•						68
				•	•	•	•	•	•	•	•	•						69
				•	•	•	•	•	•	•	•	•						70
				•	•	•	•	•	•	•	•	•						71
				•	•	•	•	•	•	•	•	•						72
	A276 Type 316/ A351 Gr. CF8M	PTFE		•	•	•	•	•	•	•	•	•						73
				•	•	•	•	•	•	•	•	•						74
				•	•	•	•	•	•	•	•	•						75
				•	•	•	•	•	•	•	•	•						76 77
		Flexible Graphite		•	•	•	•	•	•	•	•	•						78
				•	•	•	•	•	•	•	•	•						79 80
		PTFE		•	•	•	•	•	•	•	•	•						81
				•	•	•	•	•	•	•	•	•						82 83
		Flexible Graphite		•	•	•	•	•	•	•	•	•						84
				•	•	•	•	•	•	•	•	•						85 86
A276 Type 316	A276 Type 316/ A351 Gr. CF8M	PTFE	HYPATITE PTFE®	•	•	•	•	•	•	•	•	•						87
				•	•	•	•	•	•	•	•	•						88 89
				•	•	•	•	•	•	•	•	•						90
				•	•	•	•	•	•	•	•	•						91 92
		Flexible Graphite		•	•	•	•	•	•	•	•	•						93
				•	•	•	•	•	•	•	•	•						94 95
				•	•	•	•	•	•	•	•	•						96
				•	•	•	•	•	•	•	•	•						97 98
		PTFE		•	•	•	•	•	•	•	•	•						99
				•	•	•	•	•	•	•	•	•						100 101
				•	•	•	•	•	•	•	•	•						102
				•	•	•	•	•	•	•	•	•						103 104
		Flexible Graphite		•	•	•	•	•	•	•	•	•						105
				•	•	•	•	•	•	•	•	•						106 107
				•	•	•	•	•	•	•	•	•						108
				•	•	•	•	•	•	•	•	•						109 110

KITZ 150 / 300 SCTBZM (C) / UTBZM (C) Series
Full Port, Split Body, Side Entry Ball Valves

This is an illustrated cross-section of a typical KITZ full port, split body, floating type ball valve to exhibit the basic design concept.
The actual design of a valve may be slightly different from this illustration, depending on its size and pressure class.

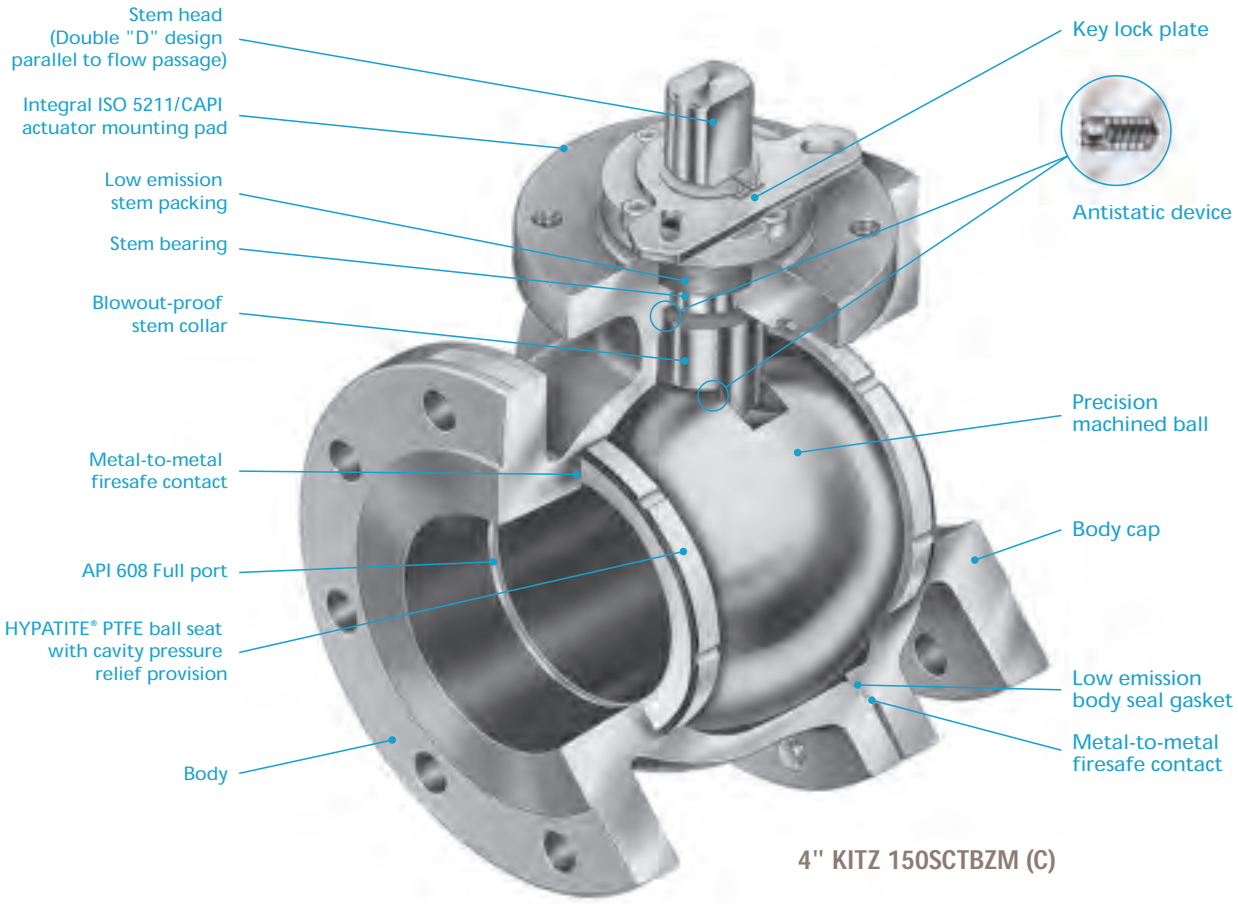

4" KITZ 150SCTBZM (C)

Standard material configuration for sour service

KITZ flanged steel ball valves are all made of component materials specially heat-treated and hardness-controlled to conform with NACE MR0103 requirements, and proved suitable for servicing sour gases or other hydrogen sulfide bearing hydrocarbons.

Extensive safety considerations

KITZ ball valves are designed with extensive safety considerations for users. Blow-out proof stems, provision of locking devices and prevention of misalignment of lever handles provide safe handling in the field and trouble-free operation in the plant. Antistatic devices, firesafe seal design and cavity pressure relief features all assure the economic benefits of smooth, steady plant operation. KITZ advancements in low emission design features contribute to the global battle against fugitive emissions while greatly reducing costs caused by product loss.

KITZ 150 / 300 SCTAM (C) / UTAM (C) Series
Regular Port, Uni-body, End Entry Ball Valves

This is an illustrated cross-section of a typical KITZ regular port, uni-body, floating type ball valve to exhibit the basic design concept
The actual design of a valve may be slightly different from this illustration, depending on its size and pressure class.

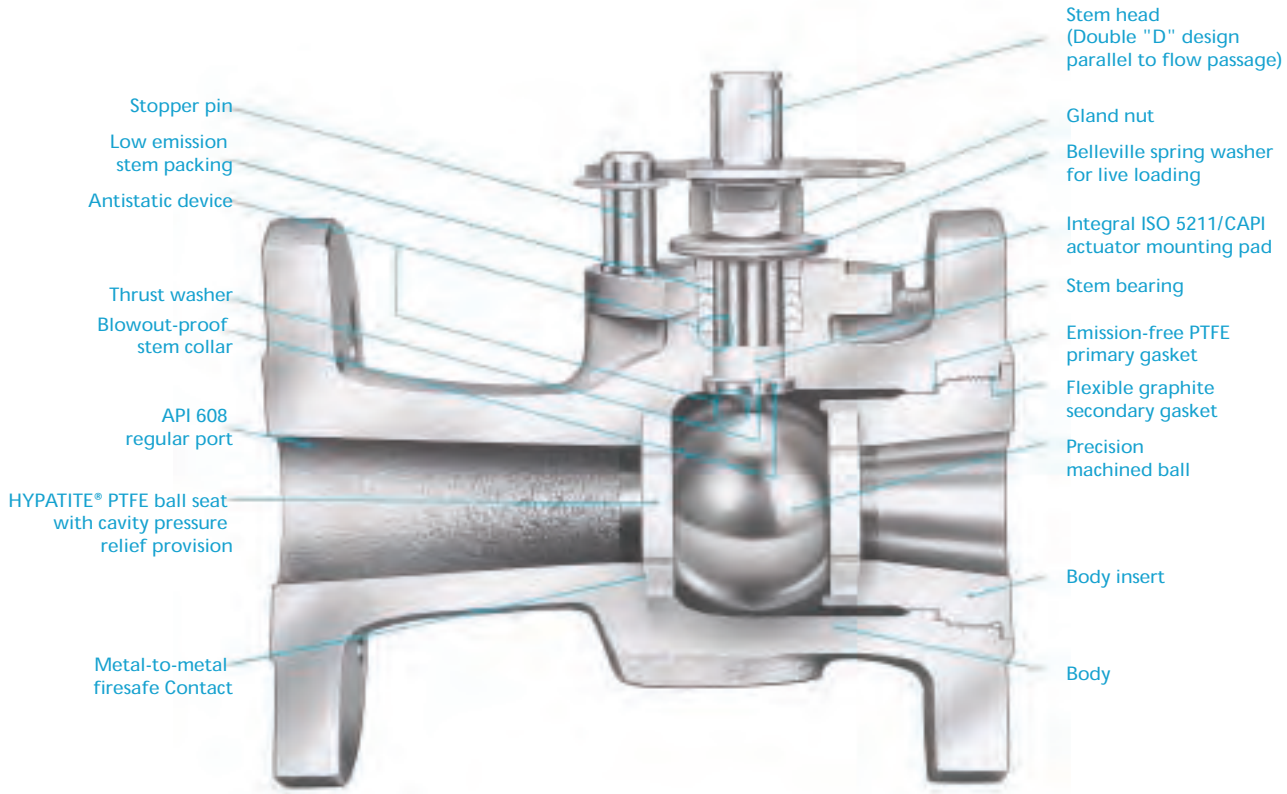

4" KITZ 150SCTAM (C)

Bubble-tight sealing performance with HYPATITE® ball seats

HYPATITE® ball seats, standard stem seals of KITZ ball valves, are made of denatured PTFE, a molecularly reinforced PTFE / PFA copolymer, and specifically engineered for high **bi-directional** sealing performance and prolonged service life of valves. Its resistance to high or low temperatures, creep or compression, abrasion and corrosion is outstanding. As an option, KITZ **SWELLESS®** ball seats principally made of PFA are recommended specifically for monomer service. This new seat maximizes resistance to the permeation of monomer into its molecular structure (generally known as a "swelling" problem) which causes seat deformation and seriously affects shut-off function of valves in styrene and butadiene monomer service.

Simplified actuator mounting

ISO 5211 actuator mounting pad is integrally provided for uniformly simplified mounting of any actuators provided with valve mounting flanges designed to ISO 5211 dimensional requirement.
Mounting pad and stem meet CAPI standard.

Easy maintenance

Split body design for KITZ 150 / 300 SCTBZM (C) / UTBZM (C) Series provides the convenience of very easy maintenance critically required for process plants. Body inserts of uni-body, end entry design for KITZ 150 / 300 SCTAM (C) / UTAM (C) Series are threaded into the valve body with provision of unthreading for valve disassembly in case of maintenance operation.

Seven Safety Considerations for KITZ 150 / 300 SCTBZM (C) / UTBZM (C) and 150 / 300 SCTAM (C) / UTAM (C) Series Ball Valves

1. **Double "D"** stem head design provides mounting of the lever handle always in parallel to the flow passage. Misalignment of the handle is thus prevented. (Fig. 1)

2. The lower end of the stem is designed with an integral collar to be **blowout-proof**. It also functions as the backseat for assured stem sealing. (Fig. 2)

3. An **antistatic feature** is provided to ensure electrical continuity between ball, stem, and body. (Fig. 2)

4. Facility for mounting a **locking device** for prevention of accidental valve operation is provided.

5. **Plant fires** are a serious concern for soft-seated ball valves because of possible fluid leakage and consequent increase of the fire magnitude caused by deterioration of resilient sealing materials.

- KITZ ball valves are engineered for fire safety and successfully **fire tested** to minimize both external and internal fluid leakage after plant fires. They have **post-fire metal-to-metal contact** of all sealing areas such as:

- Contact between ball and valve shell (Fig. 3 & 4)

- Contact between stem and valve shell (Fig. 5 & 6)

- Valve shell coupling flanges of split body design (Fig. 7 & 8)

- Contact between valve body and insert of uni-body design (Fig. 9)

- The problem of external fluid leakage is more serious than internal leakage through the valve bore because of the fear of fueling the fire. To prevent this, KITZ ball valves may be ordered with **flexible graphite packing** and **gaskets**, which are extremely heat resistant, and not affected by the fire. For details, refer to Page 121 and 122.

6. The surface of stem and stuffing box, and interface clearance of stem-to-gland, stem-to-stem bearing and gland-to-stuffing box are precision controlled on machining and assembly for **low emission service**. Materials and design of PTFE or flexible graphite packing and gasket are also carefully selected to minimize leakage of line fluid into the atmosphere. Refer to Page 121 and 122 for more information.

7. A provision for **cavity pressure relief** is incorporated into precision engineered KITZ HYPATITE® PTFE ball seats for the ultimate safety. Refer to Page 5 for details.

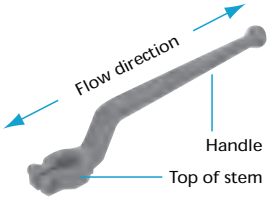

Fig. 1

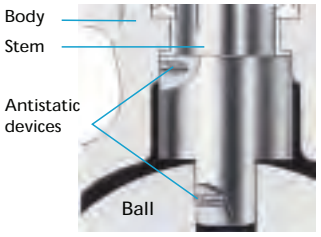

Fig. 2

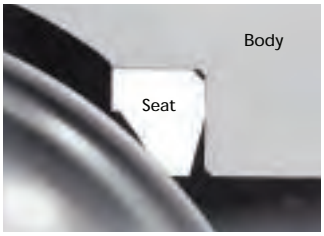

Fig. 3 (Before fire)

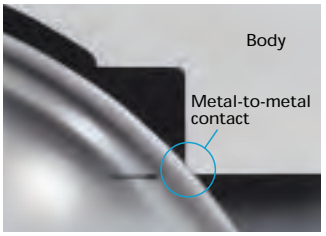

Fig. 4 (After fire)

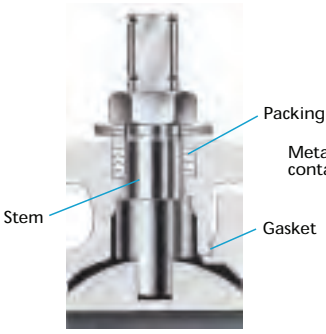

Fig. 5 (Before fire)


Fig. 6 (After fire)

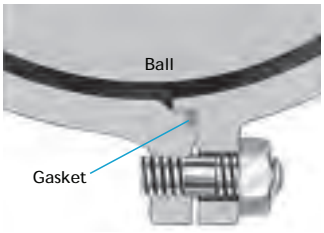

Fig. 7 (Before fire)

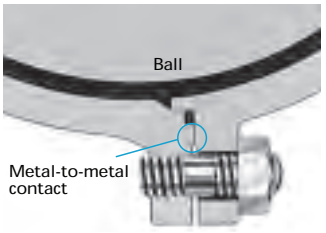

Fig. 8 (After fire)

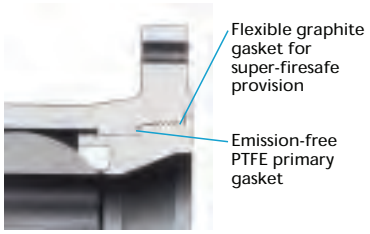

Fig. 9 (Uni-body insert)

As the primary body seal, emission free PTFE gasket is always provided. Flexible graphite gasket may be additionally employed as the secondary body seal for firesafe provision.

ISO 5211 Actuator Mounting Pads

KITZ 150 / 300 SCTBZM (C) / UTBZM (C) Series and 150 / 300 SCTAM (C) / UTAM (C) Series ball valves are furnished with an integral actuator mounting pad designed and factory-drilled according to ISO 5211 specification. This easily and uniformly enables mounting of any actuators provided with ISO 5211 valve mounting flanges. Mounting pad also conforms to CAPI design standard.

Note: Customers are requested to prepare mounting brackets and connectors for the actuators chosen for their valve automation. Actuators can be mounted on KITZ ball valves without disassembly of valve glands.

Actuator mounting pad

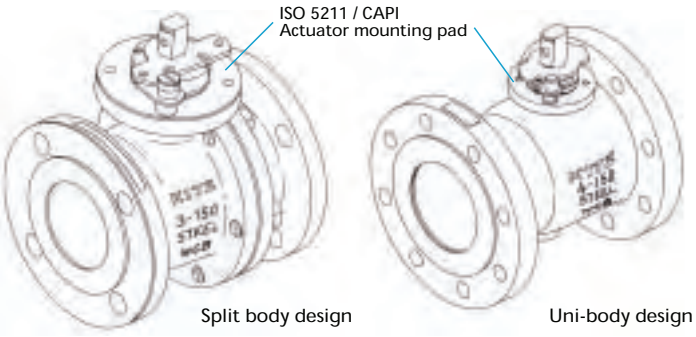

HYPATITE® PTFE Ball Seats

KITZ ball valves are furnished, as the manufacturer's standard, with **HYPATITE®** PTFE ball seats made of denatured PTFE, a molecularly reinforced PTFE / PFA copolymer, and specially engineered for high performance which include:

A typical HYPATITE® PTFE seat used for 4" KITZ 150 SCTBZM (C) ball valves.

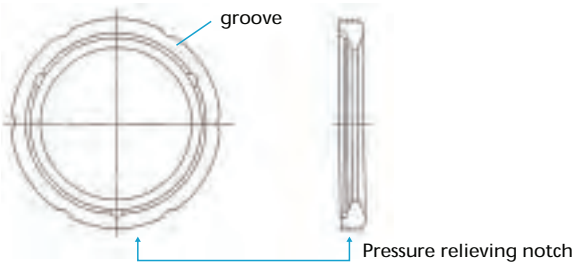

- Wide service temperature range of -20°F through 500°F.
  This is for standard valve design and materials used for medium to high temperature services. The lower temperature range can be extended down to -321°F by means of extended bonnet design and special low temperature service materials.
- High chemical resistance is comparable to virgin PTFE.
- Monomer permeability is lower than other PTFE materials.
- Resistance against compression and creeping (cold flow) is higher than other PTFE materials to guarantee long life cycle.
- Specific gravity and friction coefficient are equal to those of virgin PTFE for smooth valve operation.
- Purity of processed products is guaranteed as highly as virgin PTFE.
- Resiliency is as high as other PTFE materials for bubble-tight sealing performance.

Refer to Page 119 and 120 for more technical data.

Optional Ball Seats

In addition to the standard **HYPATITE®** PTFE ball seats, **SWELLESS®** PFA seats are recommended for monomer service. Also virgin PTFE and carbon filled PTFE seats are optionally available for versatility in service applications.

Cavity Pressure Relief

Some line fluid is usually left trapped inside the ball-body cavity. This fluid can expand under the influence of high ambient or line temperature. An abnormal increase in cavity pressure can damage the valve seats or balls, unless the valve has an adequate cavity pressure relief provision. **Trunnion mounted ball valves provide protection from this problem with standard seat configuration**. Refer to KITZ Cat. No. K-202 for technical details of KITZ trunnion mounted ball valves.

In case of floating ball valves, however, their rather simple seating principle requires some special protection from excessive cavity pressure rise **when highly volatile liquid service is subject to frequent and large temperature variation, while the valve is not frequently operated**. KITZ 150 / 300 SCTBZM (C) / UTBZM (C) and 150 / 300 SCTAM (C) / UTAM (C) Series ball valves offer **self-relieving of excessive cavity pressure** as a standard feature engineered in **HYPATITE®** ball seats.

Other general solutions for floating ball valves include employment of automatic pressure relief valves or drilling pressure equalization holes on the ball. If the requirement of automatic cavity pressure relief is as critical as in chlorine service, be sure to contact KITZ Corporation or its distributors for technical advice.

Low Emission Design Features for KITZ 150 / 300 SCTBZM (C) / UTBZM (C) and 150 / 300 SCTAM (C) / UTAM (C) Series Ball Valves

The US Federal Clean Air Act requires all plants handling the toxic gases and chemicals listed by the Environmental Protection Agency (EPA) to periodically monitor their plant equipment for detection of fugitive emissions exceeding 500 ppm, and repair or replace all defective equipment immediately. The California state regulation requires 100 ppm maximum leak level.

Our low emission service ball valves developed after several years of trial and error in our laboratory, are designed, engineered, manufactured and tested to now meet the **100 ppm maximum emission level*1**. This is KITZ standard specification in North America for Class 150 and 300 flanged ball valves of floating ball design, identified as KITZ 150 / 300 SCTAM (C) / UTAM (C) Series*2 (Uni-body, end entry design) and 150 / 300 SCTBZM (C) / UTBZM (C) Series (Split body, side entry design) in this catalog. Major design considerations for having upgraded our standard valves to the low emission performer are introduced below:

*1 Maximum leak level guaranteed for the duration of the KITZ warranty in North America for emission monitoring with EPA Method 21 procedures and methane-calibrated organic vapor analyzers.

*2 Except 1" and smaller sizes, which are provided with only one piece of packing ring due to limited stuffing box dimension.

Diametrical interface clearance

The diametrical clearance of the three interfacing contacts shown here is strictly controlled to prevent the line fluid from leaking into the atmosphere through these potential leak paths.

- • 20 mils maximum for stem to gland contact
- • 2 to 10 mils for gland to stuffing box contact
- • 8 to 16 mils for stem to stem bearing contact

Stem

The stem surface finish is controlled to between 16 RMS and 32 RMS. This specification is particularly important for flexible graphite packing, because, while the stem travels through the packing rings, graphite tends to fill micro scratches on the stem surface and migrates to the stem to function as a lubricant. Too fine a stem smoothness loses this advantage and can increase leakage. The stem straightness and roundness are also controlled according to our design and manufacturing standards.

Stuffing box

The surface finish is controlled to a maximum 125 RMS. Contrary to the stem, the stuffing box wall statically contacts packing rings, and a reasonably rougher surface finish results in a better sealing performance. The cylindricity and verticality are precision controlled according to KITZ design and manufacturing standards.

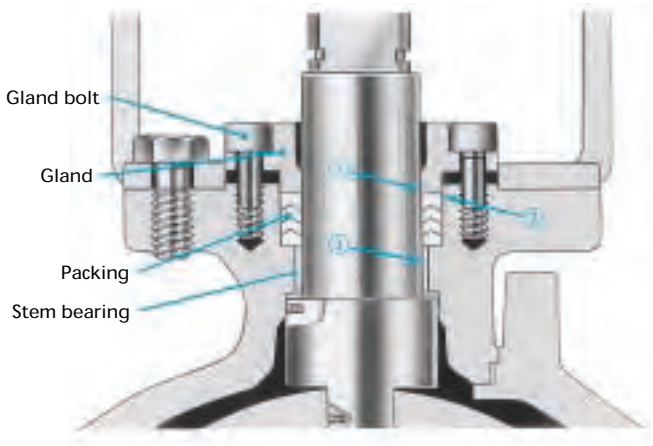

Stem seal mechanism for 150 / 300 SCTBZM (C) / UTBZM (C) 2½" and larger

Gland packing

For the standard version, V shape PTFE packing rings are employed for medium temperature low emission service. For the optional firesafe version, flexible graphite rings reinforced with stainless steel wire are used for high temperature low emission service.

Gasket

PTFE gaskets and flexible graphite gaskets are used for medium and high temperature low emission service respectively. The gasket contact faces of valve shells are precision machined to further upgrade the sealing function of the valve shell joint.

Valve Emission Performance Test to EPA Method 21

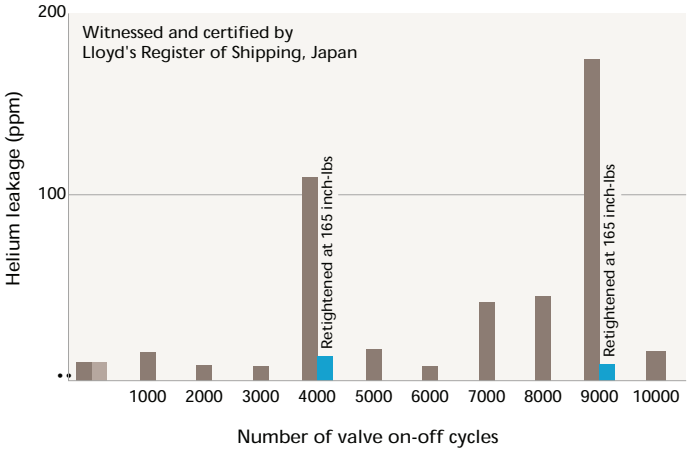

Test Valve:	6" KITZ 150 SCTBZ carbon steel ball valve with low emission flexible graphite packing
Evaluation criteria:	Maximum 100 ppm (Helium gas)
Test Condition:	10,000 open-close cycles at room temperature with 285 psig test pressure
Packing tightening torque:	148 inch-lbs

Low Emission Performance Test

The outstanding low emission performance of KITZ ball valves was proven in repeated laboratory tests. Here is an example of test reports certified by Lloyd's Register of Shipping, Japan.

A third party performance test was also carried out on our 6" Class 300 uni-body ball valve packed with flexible graphite, at Yarmouth Research and Technology, Maine, USA, according to one user's testing specifications. The test conditions included 10,000 cycle operation of the test valve through 3 thermal cycles at 350•F,•with the valve stem positioned horizontally to the ground, and the leak level was monitored from the plastic sealed valve bonnet. The results were found very similar to our own findings at our laboratory.

Low Emission Acceptance Test

While waiting for official release of a new ISO standard stipulating the method and evaluation of valve emission suppressing performance for production, KITZ Corporation has developed its own test procedure and evaluation criteria basing on the results of laboratory tests carried out for the last several years. Most significantly, we employ **10 ppm** maximum leak level for the helium gas pressurized valves as the acceptance criteria for the random test carried out prior to shipment. A concern for the stress relaxation of graphite packing which might be caused by passage of time during transportation and storage of valves, was the reason for this very severe acceptance criteria.

KITZ General Term of Warranty for Low Emission Service Valves

Warranty Period

12 months after placement in service, but not exceeding 18 months after shipment from KITZ factories.

Warranty Conditions

1. Proper storage and maintenance of valves prior to installation, according to the KITZ maintenance manual.
2. Proper handling of valves during transportation and plant construction, which includes sandblasting and painting, for protection of exposed stems and glands of valves.
3. **Need of adequate retightening of gland packing sets***, according to the KITZ maintenance manual to reduce the leak level, when an excessive level of fugitive emission is detected during:
   a) Pre-installation valve inspection
   b) Process pilot run or start-up operation
   c) Periodic or occasional inspection of valves in service
4. **Valve stems must be kept free of scratches, scars or corrosion**.
5. Following all other instructions provided in the KITZ maintenance and operation manuals.

* This condition is particularly important when valves are subjected to thermal cycles on the site. Users are recommended to ensure that packing is retightened after every cool-down of the process.

Pressure-Temperature Ratings

The pressure-temperature ratings of ball valves are determined, not only by valve shell materials, but more essentially by sealing materials used for ball seats, gland packing and gaskets. Sealing materials may be high molecule plastics or rubbers, but the choice is limited by the characteristics of the service fluid, working tempera-tures, working pressures, velocity of fluid, and operational frequency of valves.

As it is very difficult to predetermine the exact pressure-temperature rating for all kinds of fluid under all imaginable conditions, we have prepared general rating charts for non-shock fluid service here, based on our past experiences both in the field and in our laboratory.
In case of extraordinary service conditions as mentioned below, contact KITZ Corporation or its distributors for technical advice:

1. Valves shall be left fully closed for a long period of time under high temperature or high differential pressure.
2. Valves shall be frequently operated under high temperature or high differential pressure.
3. Frequent change of line pressure or temperature.

Seat materials •A•: Virgin PTFE •B•: HYPATITE® PTFE, Carbon-filled PTFE, or SWELLESS®. HYPATITE® is the standard seat material for KITZ ball valves. Specify virgin PTFE or carbon-filled PTFE when required. The body pressure ratings shown here are for ASTM A216 Gr. WCB. For the pressure ratings of other valve shell materials, refer to the latest edition of ASME B16.34.

150 / 300 SCTBZM (C) / UTBZM (C) : 1/2" and 3/4"
150 / 300 SCTAM (C) / UTAM (C) : 1/2" to 1"

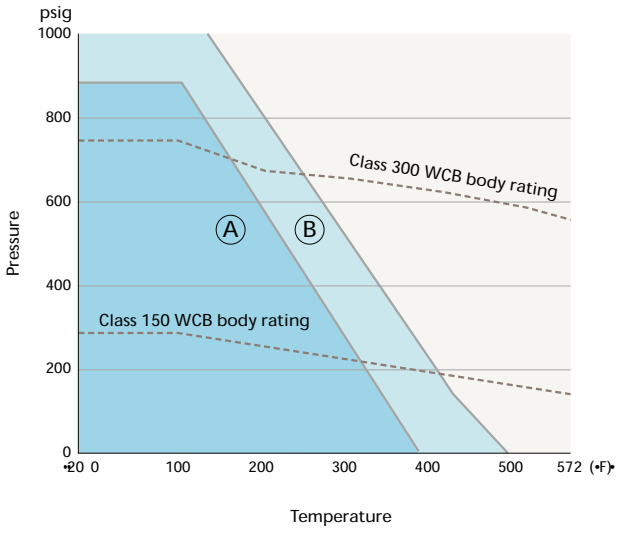

150 / 300 SCTBZM (C) / UTBZM (C) : 1 to 2 1/2"
150 / 300 SCTAM (C) / UTAM (C) : 1 1/4" to 3"

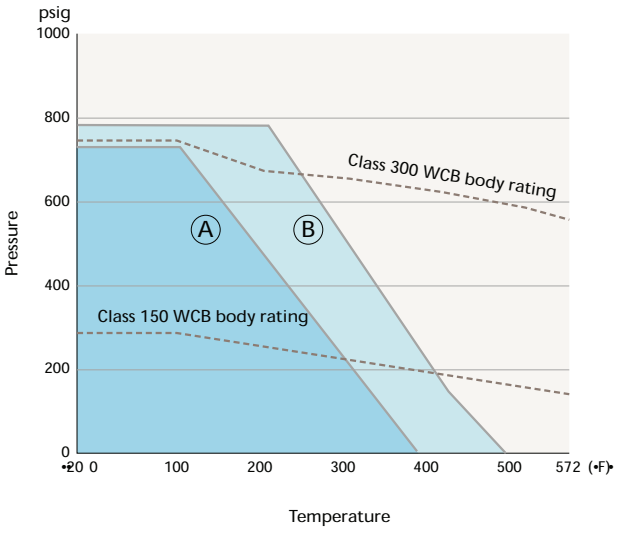

150 / 300 SCTBZM (C) / UTBZM (C) : 3" and 4"
150 / 300 SCTAM (C) / UTAM (C) : 4" and 6"

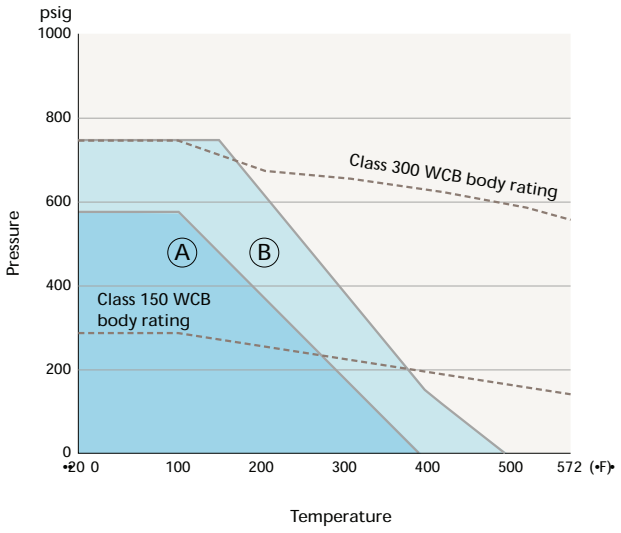

150 / 300 SCTBZM (C) / UTBZM (C) : 5" and 6"
150 / 300 SCTAM (C) / UTAM (C) : 8" and 10"

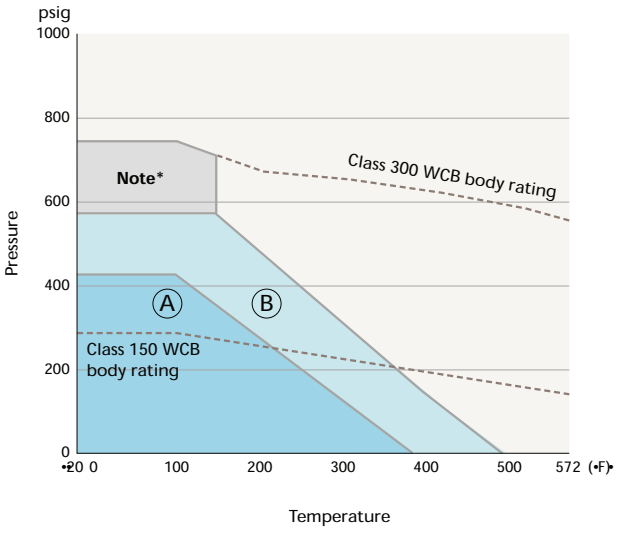

Note* Continuous pressurization is not recommended in this P-T range.

Class 150 / 300 SCTBZM (C) / UTBZM (C) : 8" and 10"
(Refer to **SPECIAL NOTE** on Page 10.)

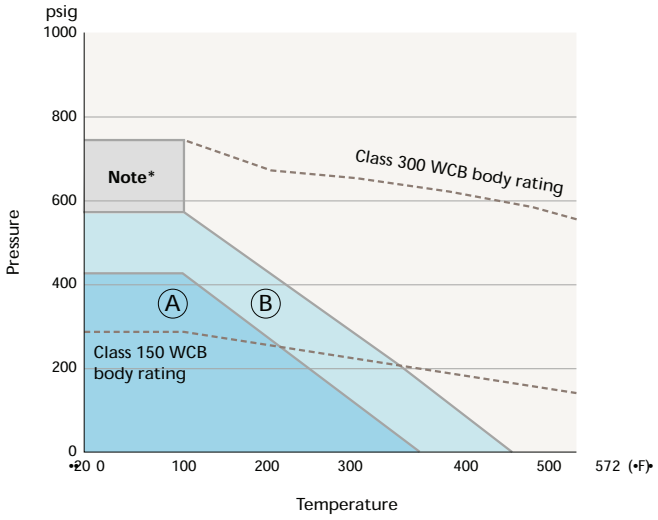

Note* Continuous pressurization is not recommended in this P-T range.
Refer to Page 8 for Ⓐ and Ⓑ.

Class 600 / 1500 SCTBM / UTBM

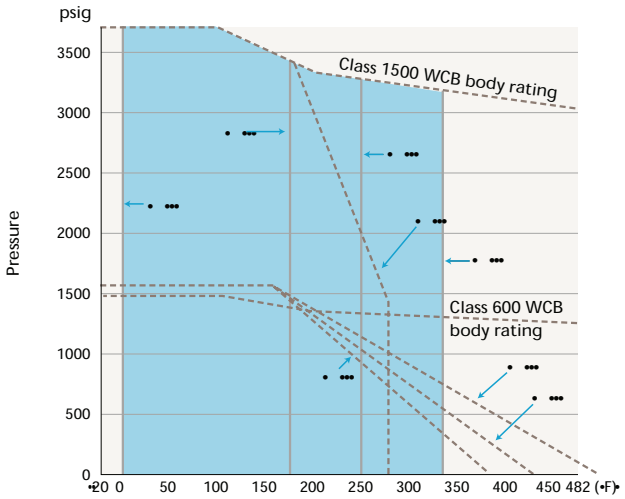

Ball Seat Materials
- • KITZ HYPATITE or Carbon-filled PTFE
- • Glass-filled PTFE with MoS_2
- • Virgin PTFE
- • Nylon with MoS_2

O-ring Upper Limit
- • (1) FKM
  (2) Low-temperature FPM
- • (1) EPDM
  (2) ECO (Epichlorohydrin Copolymer)
- • (1) NBR
  (2) Low-temperature NBR

O-ring Lower Limit *
- • FKM

••O-rings made of others than FPM can withstand •20•F.•

Type 1500 / 1000 SC3THZM / U3THZM SC3TFZM / U3TFZM

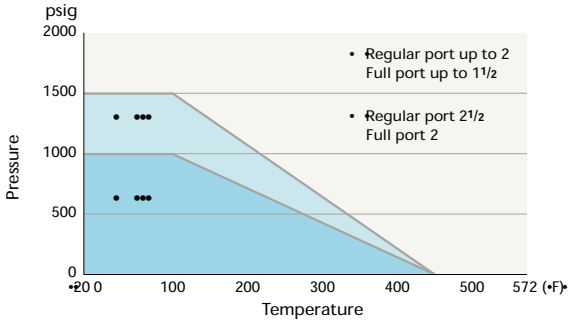

Type 2000 / 1500 SCTKZM / UTKZM SCTHZM / UTHZM SCTHWZM / UTHWZM

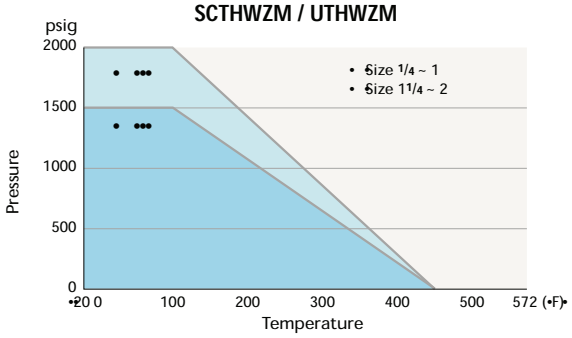

Type 800 UTHM

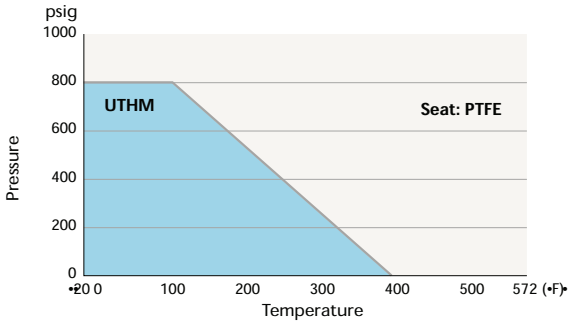

Type 600 UTKM / SCTKM

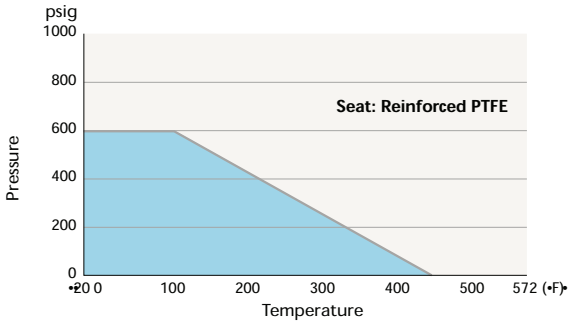



150SCTBZM (C)
150SCTBZM-FS (C)

MATERIAL LIST

No.	Name of Parts	Materials
1	BODY	A216 Gr. WCB
2	BODY CAP	A216 Gr. WCB
3	STEM	A276 TYPE 316
4	BALL	A351 Gr. CF8M or A276 TYPE 316
7 A	GLAND	A276 TYPE 316 (UP TO SIZE 1)
7 B	GLAND	A351 Gr. CF8 (SIZE 1 1/2 & OVER)
8 A	GLAND PACKING	150SCTBZM (C)
		PTFE (SIZE 1 ONLY)
8 B	GLAND PACKING	150SCTBZM (C)
		PTFE (EXCEPT FOR SIZE 1)
		150SCTBZM-FS (C)
		FLEXIBLE GRAPHITE
9	HANDLE	STAINLESS STEEL (UP TO SIZE 1)
		DUCTILE IRON (SIZE 1 1/2-3)
9 A	HANDLE BAR	CARBON STEEL (SIZE 4 & OVER)
9 B	HANDLE HEAD	DUCTILE IRON (SIZE 4 & OVER)
10	HANDLE NUT	STAINLESS STEEL (UP TO SIZE 1)
16 A	NAME PLATE	STAINLESS STEEL
16 B	LEV PLATE	STAINLESS STEEL
19	GASKET	150SCTBZM (C)
		PTFE
		150SCTBZM-FS (C)
		FLEXIBLE GRAPHITE
30	BALL SEAT	HYPATITE PTFE
33	CAP NUT	A194 Gr. 2HM
34	GLAND NUT	STAINLESS STEEL (UP TO SIZE 1)
35	CAP BOLT	A193 Gr. B7M
36	GLAND BOLT	A193 Gr. B8M
40 A	LOCK PLATE	STAINLESS STEEL (UP TO SIZE 1)
40 B	KEY LOCK PLATE	STAINLESS STEEL
43	CONED DISC SPRING	STAINLESS STEEL (UP TO SIZE 1)
47	THRUST WASHER	C/F PTFE (SIZE 1/2 & 3/4)
		G/F PTFE (SIZE 1-2)
48	SNAP RING	CARBON STEEL (SIZE 1 1/2 & OVER)
49	STOPPER	STAINLESS STEEL (SIZE 1 1/2 & OVER)
67	STEM BEARING	G/F PTFE (SIZE 3 & OVER)
123 A	HANDLE BOLT	STAINLESS STEEL (SIZE 1 1/2 & OVER)
123 B	HANDLE BOLT	STAINLESS STEEL (SIZE 4 & OVER)
124	SPRING & PIN	STAINLESS STEEL
126	STOPPER PIN	STAINLESS STEEL
145	SPRING WASHER	STAINLESS STEEL (SIZE 1 1/2 & OVER)
155	SPACER	150SCTBZM-FS (C)
		REINFORCED PTFE (UP TO SIZE 1)

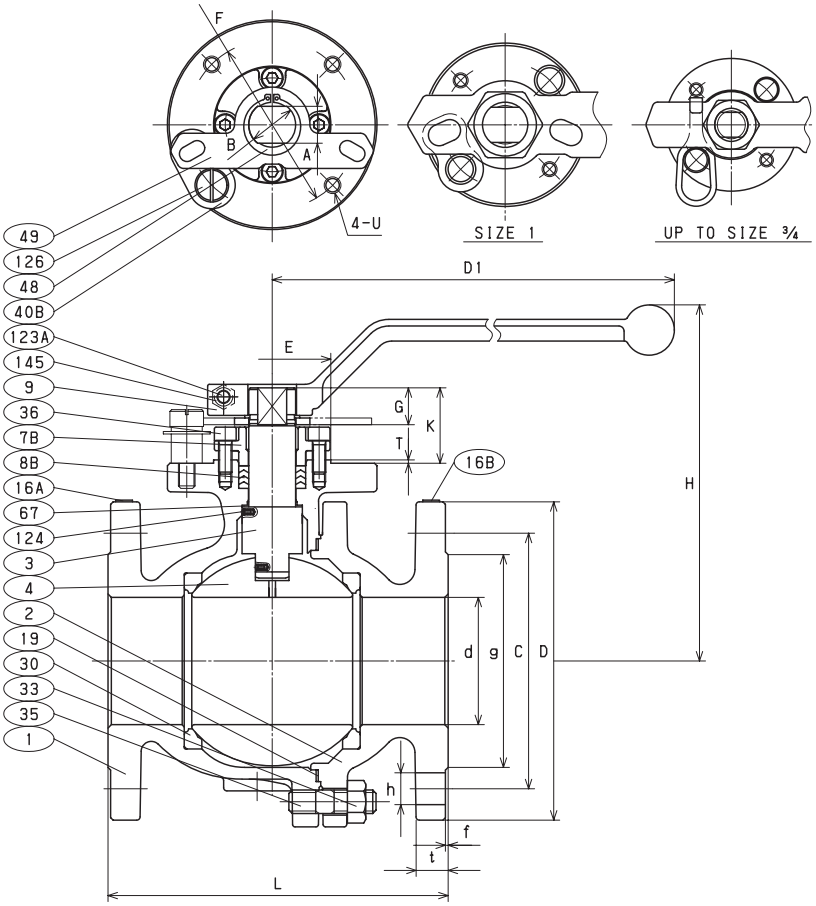

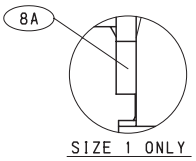

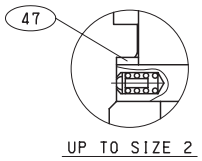

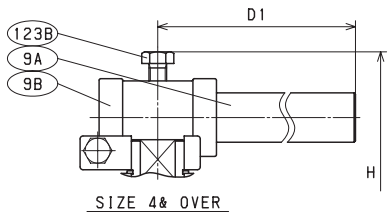

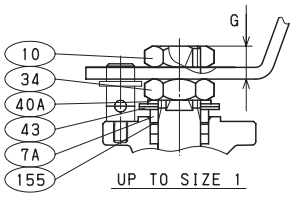

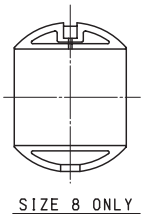

DIMENSIONS

Unit : inch

Nominal Size						End Flange								Mounting Dimensions for Actuator								
							Bolt Hole															
in.	mm	d	H	D1	L	D	C	No.	h	Bolt Size	g	t	f	A	B	E	F	G	K	T	U	ISO 5211 Flange Type
1/2	15	0.55	4.53	6.30	4.25	3.50	2.38	4	0.62	1/2	1.38	0.44	0.06	0.355	0.473	0.985	1.417	0.39	0.85	0.06	1/4-20UNC	F03
3/4	20	0.75	4.72	6.30	4.62	3.88	2.75	4	0.62	1/2	1.69	0.44	0.06	0.355	0.473	0.985	1.417	0.39	0.85	0.06	1/4-20UNC	F03
1	25	0.95	5.28	7.09	5.00	4.25	3.12	4	0.62	1/2	2.00	0.44	0.06	0.552	0.709	1.378	1.969	0.55	1.26	0.08	1/4-20UNC	F05
1 1/2	40	1.50	5.63	9.06	6.50	5.00	3.88	4	0.62	1/2	2.88	0.56	0.06	0.670	0.867	2.166	2.756	0.67	1.34	0.08	5/16-18UNC	F07
2	50	1.97	5.98	9.06	7.00	6.00	4.75	4	0.75	5/8	3.62	0.62	0.06	0.670	0.867	2.166	2.756	0.67	1.34	0.08	5/16-18UNC	F07
2 1/2	65	2.52	8.11	15.75	7.50	7.00	5.50	4	0.75	5/8	4.12	0.69	0.06	0.867	1.103	2.756	4.016	0.87	1.77	0.08	3/8-16UNC	F10
3	80	3.00	8.39	15.75	8.00	7.50	6.00	4	0.75	5/8	5.00	0.75	0.06	0.867	1.103	2.756	4.016	0.87	1.77	0.08	3/8-16UNC	F10
4	100	3.94	10.08	18.11	9.00	9.00	7.50	8	0.75	5/8	6.19	0.94	0.06	1.063	1.418	3.347	4.921	1.06	1.97	0.08	1/2-13UNC	F12
6	150	5.95	12.60	39.37	15.50	11.00	9.50	8	0.88	3/4	8.50	1.00	0.06	1.418	1.890	3.937	5.512	1.42	2.48	0.08	5/8-11UNC	F14
8	200	7.95	16.34	59.06	18.00	13.50	11.75	8	0.88	3/4	10.62	1.12	0.06	1.811	2.362	5.118	6.496	1.81	3.07	0.08	3/4-10UNC	F16

G-150SCTBZM (C)
G-150SCTBZM-FS (C)

MATERIAL LIST

No.	Name of Parts	Materials
1	BODY	A216 Gr. WCB
2	BODY CAP	A216 Gr. WCB
3	STEM	A276 TYPE 316
4	BALL	A351 Gr. CF8M
7	GLAND	A351 Gr. CF8M
8	GLAND PACKING	G-150SCTBZM (C)
		PTFE
		G-150SCTBZM-FS (C)
		FLEXIBLE GRAPHITE
16A	NAME PLATE	STAINLESS STEEL
16B	LEV PLATE	STAINLESS STEEL
19	GASKET	G-150SCTBZM (C)
		PTFE
		G-150SCTBZM-FS (C)
		FLEXIBLE GRAPHITE
30	BALL SEAT	HYPATITE PTFE
33	CAP NUT	A194 Gr. 2HM
35	CAP BOLT	A193 Gr. B7M
36	GLAND BOLT	A193 Gr. B8M
67	STEM BEARING	G/F PTFE
92	CONNECTOR	CARBON STEEL
93	BRACKET	DUCTILE IRON
99	BOLT	CARBON STEEL
102	GEAR UNIT	
124	SPRING & PIN	A313 & A276 TYPE 316

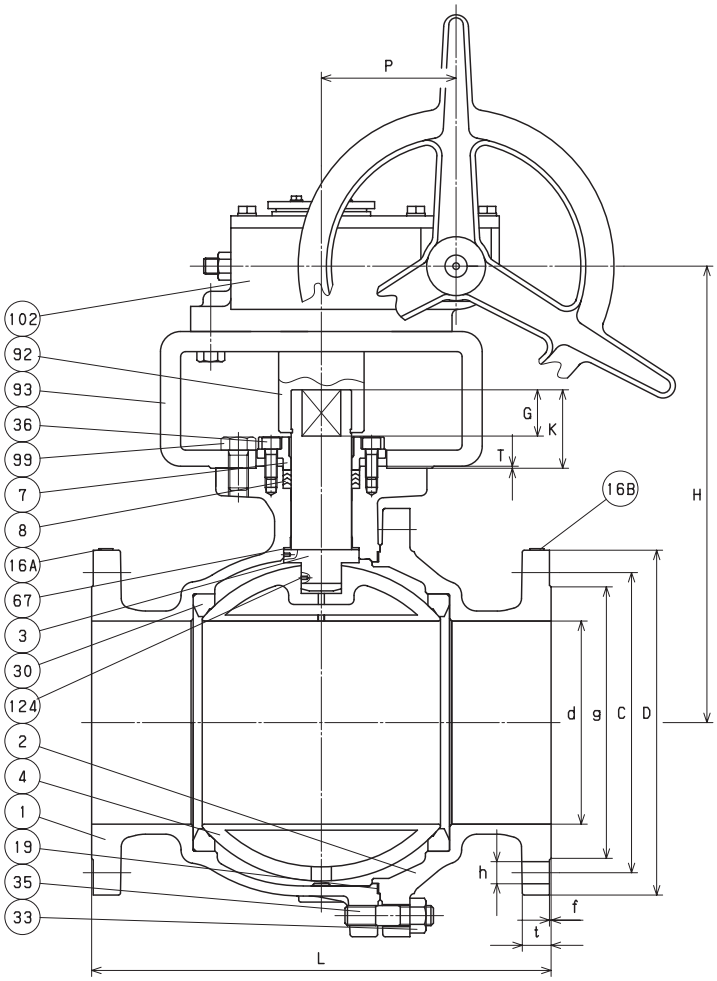

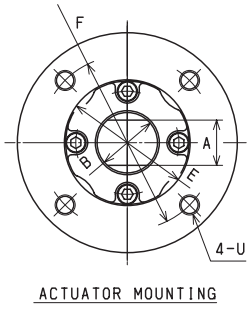

ACTUATOR MOUNTING

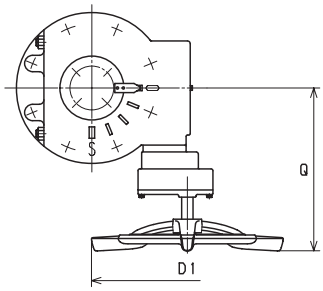

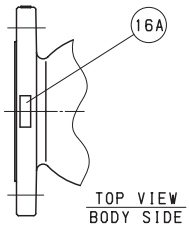

TOP VIEW
BODY SIDE

DIMENSIONS

Unit : inch

Nominal Size						End Flange								Mounting Dimensions for Actuator										
							Bolt Hole																	
in.	mm	d	H	D1	L	D	C	No.	h	Bolt Size	g	t	f	P	Q	A	B	E	F	G	K	T	U	ISO 5211 Flange Type
8	200	7.95	17.87	19.69	18.00	13.50	11.75	8	0.88	3/4	10.62	1.12	0.06	5.28	16.14	1.811	2.362	5.118	6.496	1.81	3.07	0.08	3/4-10UNC	F16
10	250	9.96	19.84	19.69	21.00	16.00	14.25	12	1.00	7/8	12.75	1.19	0.06	5.28	16.14	1.811	2.362	5.118	6.496	1.81	3.07	0.08	3/4-10UNC	F16



150SCTAM (C)
150SCTAM-FS (C)

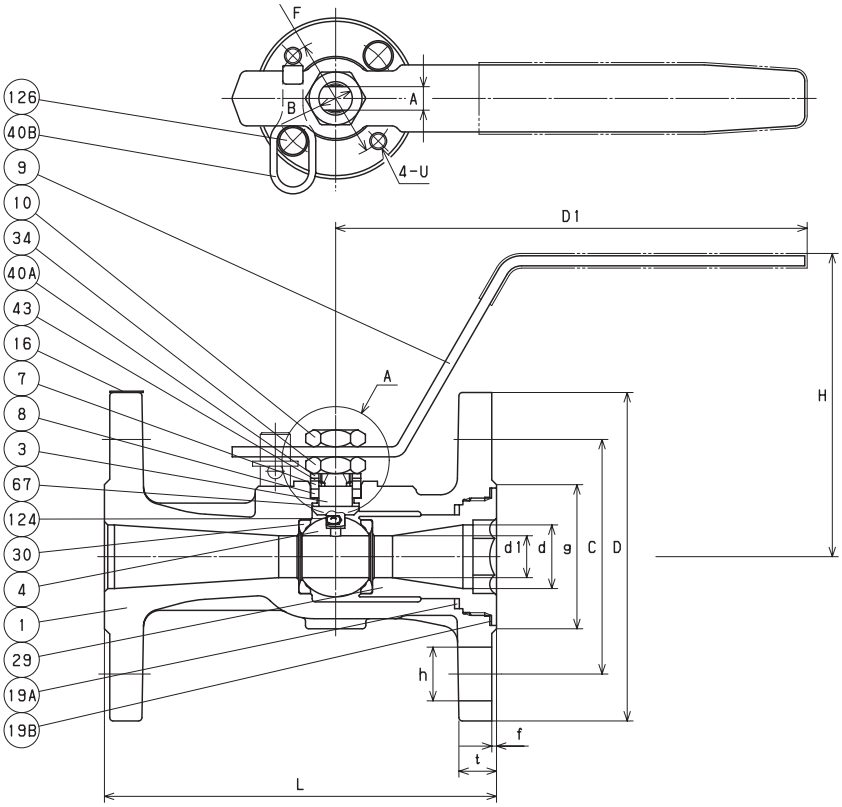

MATERIAL LIST

No.	Name of Parts	Materials
1	BODY	A216 Gr. WCB
3	STEM	A276 TYPE 316
4	BALL	A276 TYPE 316
7	GLAND	A276 TYPE 316
8	GLAND PACKING	150SCTAM (C)
		PTFE
		150SCTAM-FS (C)
		FLEXIBLE GRAPHITE
9	HANDLE	STAINLESS STEEL
10	HANDLE NUT	STAINLESS STEEL
16	NAME PLATE	STAINLESS STEEL
19 A	GASKET	PTFE
19 B	GASKET	150SCTAM-FS (C)
		FLEXIBLE GRAPHITE
29	INSERT	A216 Gr. WCB
30	BALL SEAT	HYPATITE PTFE
34	GLAND NUT	STAINLESS STEEL
40 A	LOCK PLATE	STAINLESS STEEL
40 B	KEY LOCK PLATE	STAINLESS STEEL
43	CONED DISC SPRING	STAINLESS STEEL
47	THRUST WASHER	C/F PTFE (SIZE 1 ONLY)
67	STEM BEARING	C/F PTFE (SIZE 1/2 & 3/4)
124	RING SPRING	STAINLESS STEEL
126	STOPPER PIN	STAINLESS STEEL

NOTE

(1) All valves have an anti-static thrust washer or stem bearing insuring positive conductivity between body and stem.

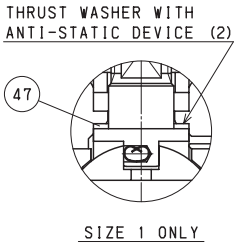

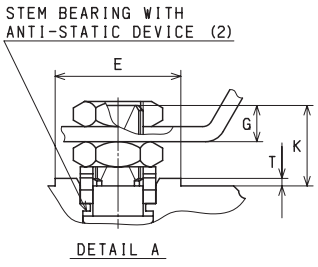

DIMENSIONS

Unit : inch

Nominal Size							End Flange								Mounting Dimensions for Actuator								
								Bolt Hole															
in.	mm	d	d1	H	D1	L	D	C	No.	h	Bolt Size	g	t	f	A	B	E	F	G	K	T	U	ISO 5211 Flange Type
1/2	15	0.49	0.39	3.50	5.52	4.25	3.50	2.38	4	0.62	1/2	1.38	0.44	0.06	0.276	0.394	0.985	1.417	0.28	0.63	0.06	1/4-20UNC	F03
3/4	20	0.75	0.49	3.58	5.52	4.625	3.88	2.75	4	0.62	1/2	1.69	0.44	0.06	0.276	0.394	0.985	1.417	0.28	0.63	0.06	1/4-20UNC	F03
1	25	0.98	0.67	3.94	6.30	5	4.25	3.12	4	0.62	1/2	2.00	0.44	0.06	0.355	0.473	0.985	1.417	0.39	0.85	0.06	1/4-20UNC	F03

150SCTAM (C)
150SCTAM-FS (C)



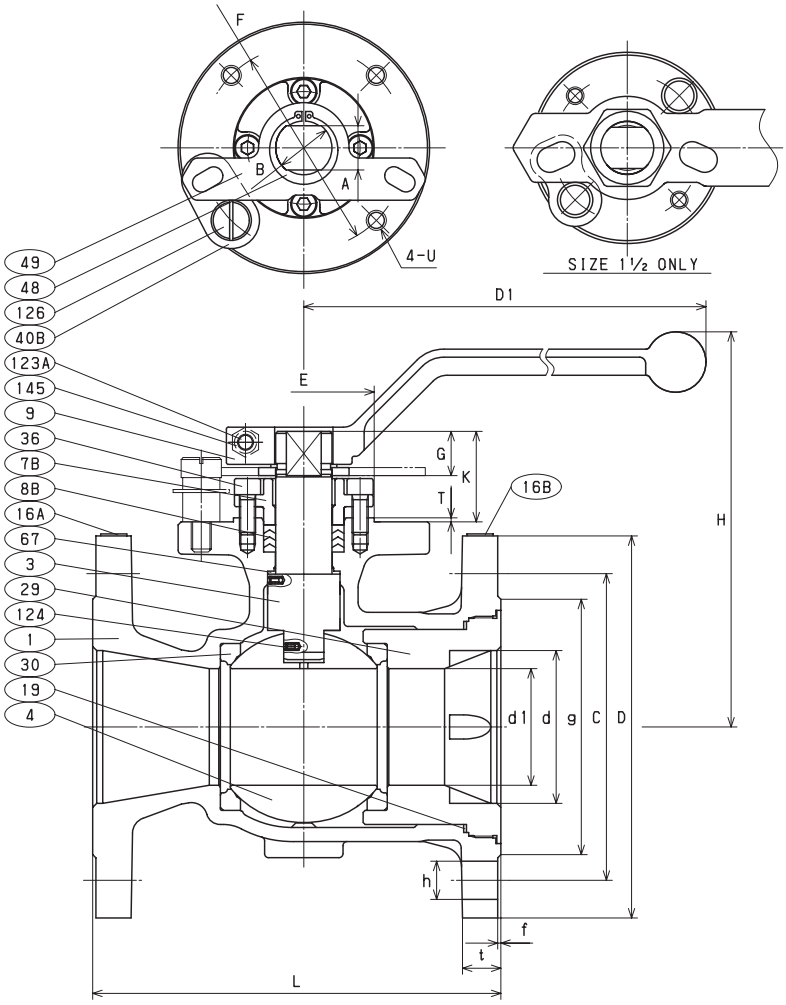

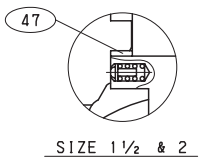

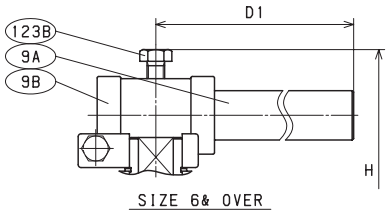

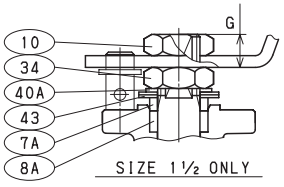

MATERIAL LIST

No.	Name of Parts	Materials
1	BODY	A216 Gr. WCB
3	STEM	A276 TYPE 316 or A479/A479M TYPE 316
4	BALL	A276 TYPE 316 or A351 Gr. CF8M
7A	GLAND	A276 TYPE 316 or A479/A479M TYPE 316
		(SIZE 1 1/2 ONLY)
7B	GLAND	A351 Gr. CF8 (SIZE 2 & OVER)
8A	GLAND PACKING	150SCTAM (C)
		PTFE (SIZE 1 1/2 ONLY)
8B	GLAND PACKING	150SCTAM (C)
		PTFE (SIZE 2 & OVER)
		150SCTAM-FS (C)
		FLEXIBLE GRAPHITE
9	HANDLE	STAINLESS STEEL (SIZE 1 1/2 ONLY)
		DUCTILE IRON (SIZE 2-4)
9A	HANDLE BAR	CARBON STEEL (SIZE 6 & OVER)
9B	HANDLE HEAD	DUCTILE IRON (SIZE 6 & OVER)
10	HANDLE NUT	STAINLESS STEEL (SIZE 1 1/2 ONLY)
16A	NAME PLATE	STAINLESS STEEL
16B	LEV PLATE	STAINLESS STEEL
19A	GASKET	PTFE
19B	GASKET	150SCTAM-FS (C)
		FLEXIBLE GRAPHITE
29	INSERT	A216 Gr. WCB (SIZE 1 1/2, 2, 8, 10)
		A105N (SIZE 3-6)
30	BALL SEAT	HYPATITE PTFE
34	GLAND NUT	STAINLESS STEEL (SIZE 1 1/2 ONLY)
36	GLAND BOLT	A193 Gr. B8M (SIZE 2 & OVER)
40A	LOCK PLATE	STAINLESS STEEL (SIZE 1 1/2 ONLY)
40B	KEY LOCK PLATE	STAINLESS STEEL
43	CONED DISC SPRING	STAINLESS STEEL (SIZE 1 1/2 ONLY)
47	THRUST WASHER	G/F PTFE (SIZE 1 1/2 & 2)
48	SNAP RING	CARBON STEEL (SIZE 2 & OVER)
49	STOPPER	STAINLESS STEEL (SIZE 2 & OVER)
67	STEM BEARING	G/F PTFE (SIZE 3 & OVER)
123A	HANDLE BOLT	STAINLESS STEEL (SIZE 2 & OVER)
123B	HANDLE BOLT	STAINLESS STEEL (SIZE 6 & OVER)
124	SPRING & PIN	STAINLESS STEEL
126	STOPPER PIN	STAINLESS STEEL
145	SPRING WASHER	STAINLESS STEEL (SIZE 2 & OVER)
155	SPACER	150SCTAM-FS (C)
		REINFORCED PTFE (SIZE 1 1/2 ONLY)

DIMENSIONS

Unit : inch

Nominal Size							End Flange								Mounting Dimensions for Actuator								
								Bolt Hole															
in.	mm	d	d1	H	D1	L	D	C	No.	h	Bolt Size	g	t	f	A	B	E	F	G	K	T	U	ISO 5211 Flange Type
1 1/2	40	1.50	1.18	5.00	7.09	6.5	5.00	3.88	4	0.62	1/2	2.88	0.56	0.06	0.552	0.709	1.378	1.969	0.55	1.26	0.08	1/4-20UNC	F05
2	50	2.00	1.50	5.20	9.06	7	6.00	4.75	4	0.75	5/8	3.62	0.62	0.06	0.670	0.867	2.166	2.756	0.67	1.34	0.08	5/16-18UNC	F07
3	80	3.00	2.28	7.76	15.75	8	7.50	6.00	4	0.75	5/8	5.00	0.75	0.06	0.867	1.103	2.756	4.016	0.87	1.77	0.08	3/8-16UNC	F10
4	100	4.00	3.00	8.39	15.75	9	9.00	7.50	8	0.75	5/8	6.19	0.94	0.06	0.867	1.103	2.756	4.016	0.87	1.77	0.08	3/8-16UNC	F10
6	150	6.00	4.49	9.69	29.53	10.5	11.00	9.50	8	0.88	3/4	8.50	1.00	0.06	1.063	1.418	3.347	4.921	1.06	1.97	0.08	1/2-13UNC	F12
8	200	8.00	5.67	11.54	39.37	11.5	13.50	11.75	8	0.88	3/4	10.62	1.12	0.06	1.418	1.890	3.937	5.512	1.42	2.48	0.08	5/8-11UNC	F14
10	250	10.00	7.36	13.62	59.06	13	16.00	14.25	12	1.00	7/8	12.75	1.19	0.06	1.811	2.363	5.119	6.496	1.81	3.07	0.08	3/4-10UNC	F16

300SCTBZM (C)
300SCTBZM-FS (C)



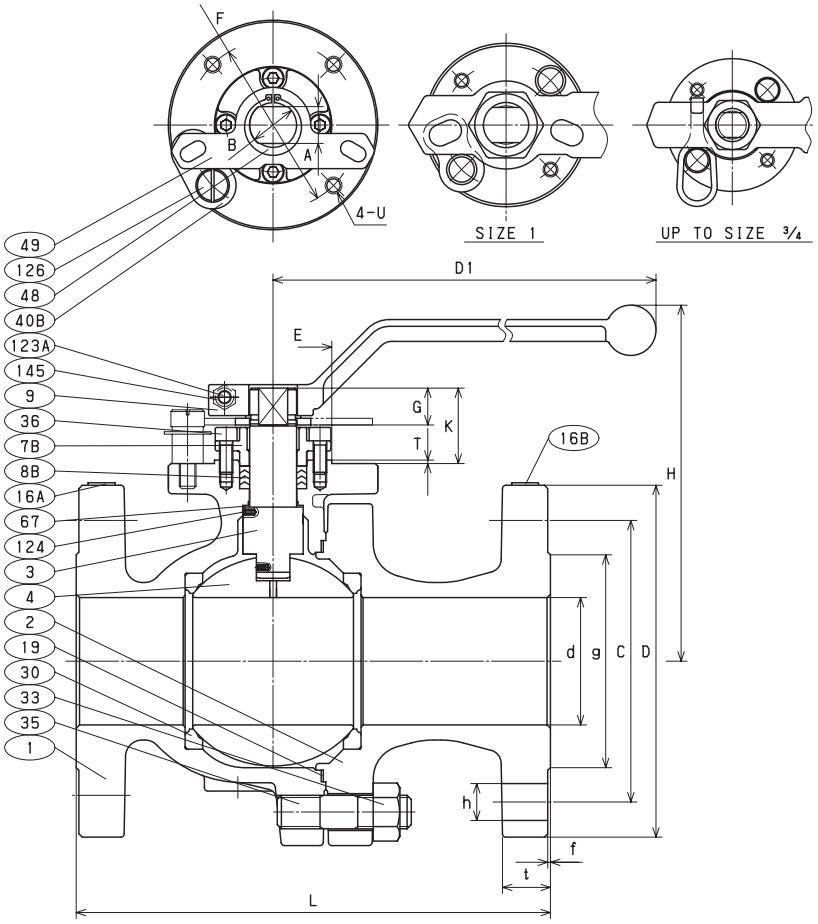

MATERIAL LIST

No.	Name of Parts	Materials
1	BODY	A216 Gr. WCB
2	BODY CAP	A216 Gr. WCB
3	STEM	A276 TYPE 316
4	BALL	A351 Gr. CF8M or A276 TYPE 316
7A	GLAND	A276 TYPE 316 (UP TO SIZE 1)
7B	GLAND	A351 Gr. CF8 (SIZE 1 1/2 & OVER)
8A	GLAND PACKING	300SCTBZM (C)
		PTFE (SIZE 1 ONLY)
8B	GLAND PACKING	300SCTBZM (C)
		PTFE (EXCEPT FOR SIZE 1)
		300SCTBZM-FS (C)
		FLEXIBLE GRAPHITE
9	HANDLE	STAINLESS STEEL (UP TO SIZE 1)
		DUCTILE IRON (SIZE 1 1/2-3)
9A	HANDLE BAR	CARBON STEEL (SIZE 4 & OVER)
9B	HANDLE HEAD	DUCTILE IRON (SIZE 4 & OVER)
10	HANDLE NUT	STAINLESS STEEL (UP TO SIZE 1)
16A	NAME PLATE	STAINLESS STEEL
16B	LEV PLATE	STAINLESS STEEL
19	GASKET	300SCTBZM (C)
		PTFE
		300SCTBZM-FS (C)
		FLEXIBLE GRAPHITE
30	BALL SEAT	HYPATITE PTFE
33	CAP NUT	A194 Gr. 2HM
34	GLAND NUT	STAINLESS STEEL (UP TO SIZE 1)
35	CAP BOLT	A193 Gr. B7M
36	GLAND BOLT	A193 Gr. B8M
40A	LOCK PLATE	STAINLESS STEEL (UP TO SIZE 1)
40B	KEY LOCK PLATE	STAINLESS STEEL
43	CONED DISC SPRING	STAINLESS STEEL (UP TO SIZE 1)
47	THRUST WASHER	C/F PTFE (SIZE 1/2 & 3/4)
		G/F PTFE (SIZE 1-2)
48	SNAP RING	CARBON STEEL (SIZE 1 1/2 & OVER)
49	STOPPER	STAINLESS STEEL (SIZE 1 1/2 & OVER)
67	STEM BEARING	G/F PTFE (SIZE 3 & OVER)
123A	HANDLE BOLT	STAINLESS STEEL (SIZE 1 1/2 & OVER)
123B	HANDLE BOLT	STAINLESS STEEL (SIZE 4 & OVER)
124	SPRING & PIN	STAINLESS STEEL
126	STOPPER PIN	STAINLESS STEEL
145	SPRING WASHER	STAINLESS STEEL (SIZE 1 1/2 & OVER)
155	SPACER	300SCTBZM-FS (C)
		REINFORCED PTFE (UP TO SIZE 1)

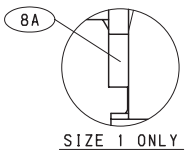

SIZE 1 ONLY

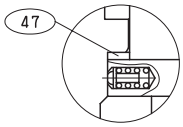

UP TO SIZE 2

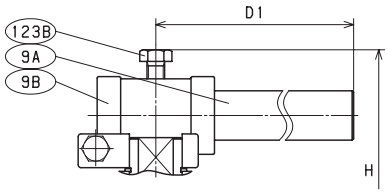

SIZE 4& OVER

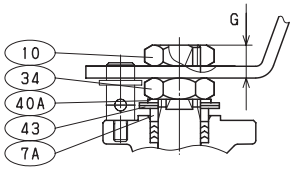

UP TO SIZE 1

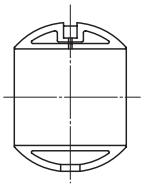
SIZE 8 ONLY

DIMENSIONS

Unit : inch

Nominal Size						End Flange								Mounting Dimensions for Actuator								
							Bolt Hole															ISO 5211
in.	mm	d	H	D1	L	D	C	No.	h	Bolt Size	g	t	f	A	B	E	F	G	K	T	U	Flange Type
1/2	15	0.55	4.53	6.30	5.50	3.75	2.62	4	0.62	1/2	1.38	0.56	0.06	0.355	0.473	0.985	1.417	0.39	0.85	0.06	1/4-20UNC	F03
3/4	20	0.75	4.72	6.30	6.00	4.62	3.25	4	0.75	5/8	1.69	0.62	0.06	0.355	0.473	0.985	1.417	0.39	0.85	0.06	1/4-20UNC	F03
1	25	0.95	5.28	7.09	6.50	4.88	3.50	4	0.75	5/8	2.00	0.69	0.06	0.552	0.709	1.378	1.969	0.55	1.26	0.08	1/4-20UNC	F05
1 1/2	40	1.50	5.63	9.06	7.50	6.14	4.50	4	0.88	3/4	2.88	0.81	0.06	0.670	0.867	2.166	2.756	0.67	1.34	0.08	5/16-18UNC	F07
2	50	1.97	5.98	9.06	8.50	6.50	5.00	8	0.75	5/8	3.62	0.88	0.06	0.670	0.867	2.166	2.756	0.67	1.34	0.08	5/16-18UNC	F07
2 1/2	65	2.52	8.11	15.75	9.50	7.50	5.88	8	0.88	3/4	4.12	1.00	0.06	0.867	1.103	2.756	4.016	0.87	1.77	0.08	3/8-16UNC	F10
3	80	3.00	8.39	15.75	11.12	8.25	6.62	8	0.88	3/4	5.00	1.12	0.06	0.867	1.103	2.756	4.016	0.87	1.77	0.08	3/8-16UNC	F10
4	100	3.94	10.08	29.50	12.00	10.00	7.88	8	0.88	3/4	6.19	1.25	0.06	1.063	1.418	3.347	4.921	1.06	1.97	0.08	1/2-13UNC	F12
6	150	5.95	12.60	39.37	15.88	12.50	10.62	12	0.88	3/4	8.50	1.44	0.06	1.418	1.890	3.937	5.512	1.42	2.48	0.08	5/8-11UNC	F14
8	200	7.95	16.34	59.06	19.75	15.00	13.00	12	1.00	7/8	10.62	1.62	0.06	1.811	2.362	5.118	6.496	1.81	3.07	0.08	3/4-10UNC	F16

G-300SCTBZM (C)
G-300SCTBZM-FS (C)

MATERIAL LIST

No.	Name of Parts	Materials
1	BODY	A216 Gr. WCB
2	BODY CAP	A216 Gr. WCB
3	STEM	A276 TYPE 316
4	BALL	A351 Gr. CF8M
7	GLAND	A351 Gr. CF8M
8	GLAND PACKING	G-300SCTBZM (C)
		PTFE
		G-300SCTBZM-FS (C)
		FLEXIBLE GRAPHITE
16A	NAME PLATE	STAINLESS STEEL
16B	LEV PLATE	STAINLESS STEEL
19	GASKET	G-300SCTBZM (C)
		PTFE
		G-300SCTBZM-FS (C)
		FLEXIBLE GRAPHITE
30	BALL SEAT	HYPATITE PTFE
33	CAP NUT	A194 Gr. 2HM
35	CAP BOLT	A193 Gr. B7M
36	GLAND BOLT	A193 Gr. B8M
67	STEM BEARING	C/F PTFE
92	CONNECTOR	CARBON STEEL
93	BRACKET	DUCTILE IRON
99	BOLT	CARBON STEEL
102	GEAR UNIT	
124	SPRING & PIN	A313 & A276 TYPE 316

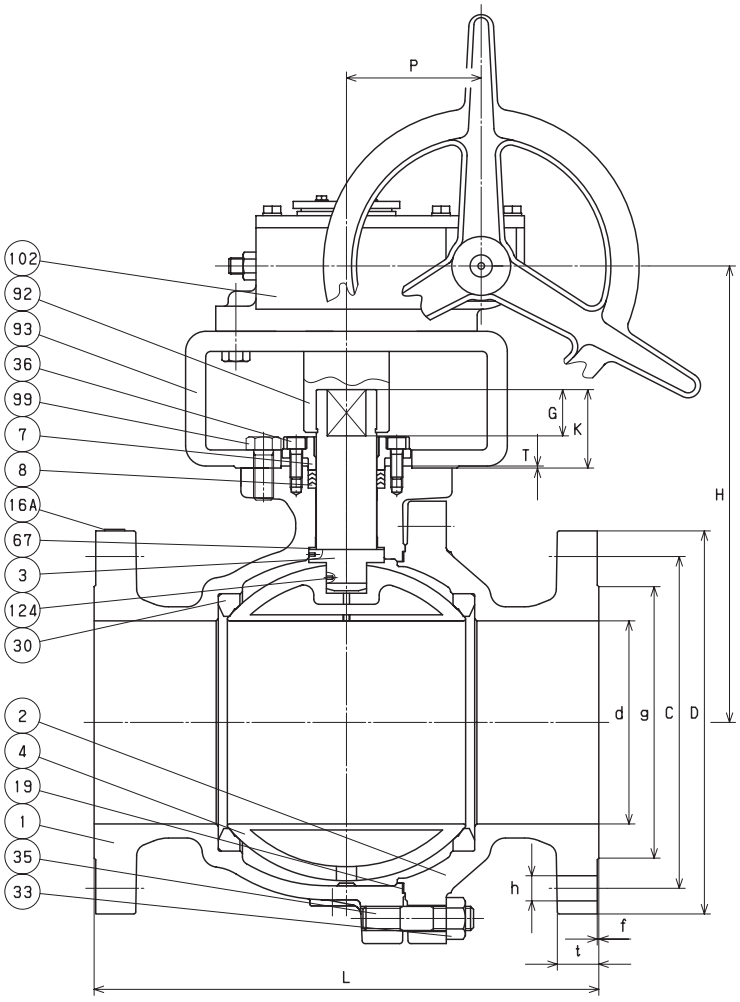

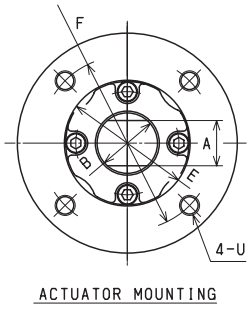

ACTUATOR MOUNTING

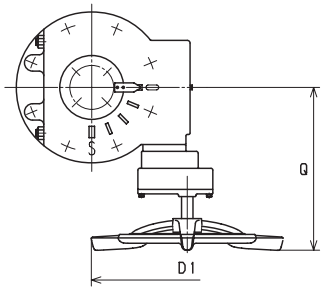

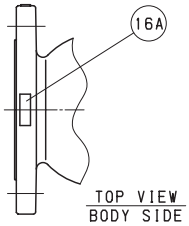

TOP VIEW
BODY SIDE

DIMENSIONS

Unit : inch

Nominal Size						End Flange								Mounting Dimensions for Actuator										
							Bolt Hole																	
in.	mm	d	H	D1	L	D	C	No.	h	Bolt Size	g	t	f	P	Q	A	B	E	F	G	K	T	U	ISO 5211 Flange Type
8	200	7.95	17.87	19.69	19.75	15.00	13.00	12	1.00	7/8	10.62	1.62	0.06	5.28	16.14	1.811	2.362	5.118	6.496	1.81	3.07	0.08	3/4-10UNC	F16



300SCTAM (C)
300SCTAM-FS (C)

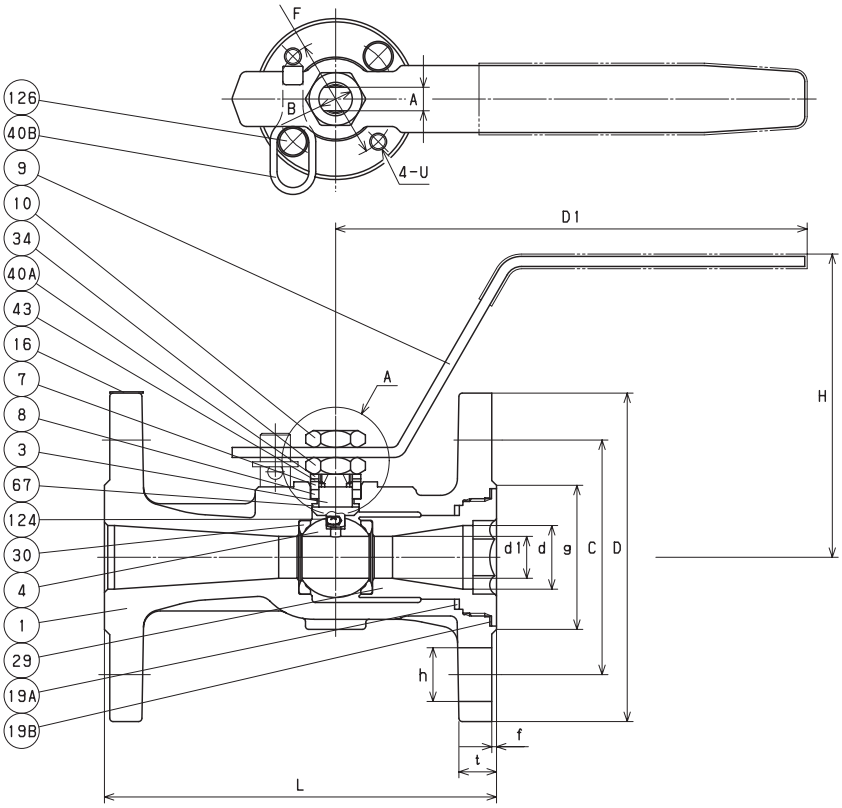

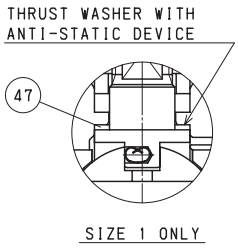

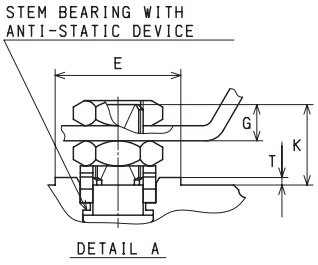

MATERIAL LIST

No.	Name of Parts	Materials
1	BODY	A216 Gr. WCB
3	STEM	A276 TYPE 316
4	BALL	A276 TYPE 316
7	GLAND	A276 TYPE 316
8	GLAND PACKING	300SCTAM (C)
		PTFE
		300SCTAM-FS (C)
		FLEXIBLE GRAPHITE
9	HANDLE	STAINLESS STEEL
10	HANDLE NUT	STAINLESS STEEL
16	NAME PLATE	STAINLESS STEEL
19 A	GASKET	PTFE
19 B	GASKET	300SCTAM-FS (C)
		FLEXIBLE GRAPHITE
29	INSERT	A216 Gr. WCB
30	BALL SEAT	HYPATITE PTFE
34	GLAND NUT	STAINLESS STEEL
40 A	LOCK PLATE	STAINLESS STEEL
40 B	KEY LOCK PLATE	STAINLESS STEEL
43	CONED DISC SPRING	STAINLESS STEEL
47	THRUST WASHER	C/F PTFE (SIZE 1 ONLY)
67	STEM BEARING	C/F PTFE (SIZE 1/2 & 3/4)
124	RING SPRING	STAINLESS STEEL
126	STOPPER PIN	STAINLESS STEEL

NOTE

(1) All valves have an anti-static thrust washer or stem bearing insuring positive conductivity between body and stem.

DIMENSIONS

Unit : inch

Nominal Size							End Flange								Mounting Dimensions for Actuator								
								Bolt Hole															
in.	mm	d	d1	H	D1	L	D	C	No.	h	Bolt Size	g	t	f	A	B	E	F	G	K	T	U	ISO 5211 Flange Type
1/2	15	0.49	0.39	3.50	5.52	4.5	3.75	2.62	4	0.62	1/2	1.38	0.56	0.06	0.276	0.394	0.985	1.417	0.28	0.63	0.06	1/4-20UNC	F03
3/4	20	0.75	0.49	3.58	5.52	6	4.62	3.25	4	0.75	5/8	1.69	0.62	0.06	0.276	0.394	0.985	1.417	0.28	0.63	0.06	1/4-20UNC	F03
1	25	0.98	0.67	3.94	6.30	6.5	4.88	3.50	4	0.75	5/8	2.00	0.69	0.06	0.355	0.473	0.985	1.417	0.39	0.85	0.06	1/4-20UNC	F03

300SCTAM (C)
300SCTAM-FS (C)



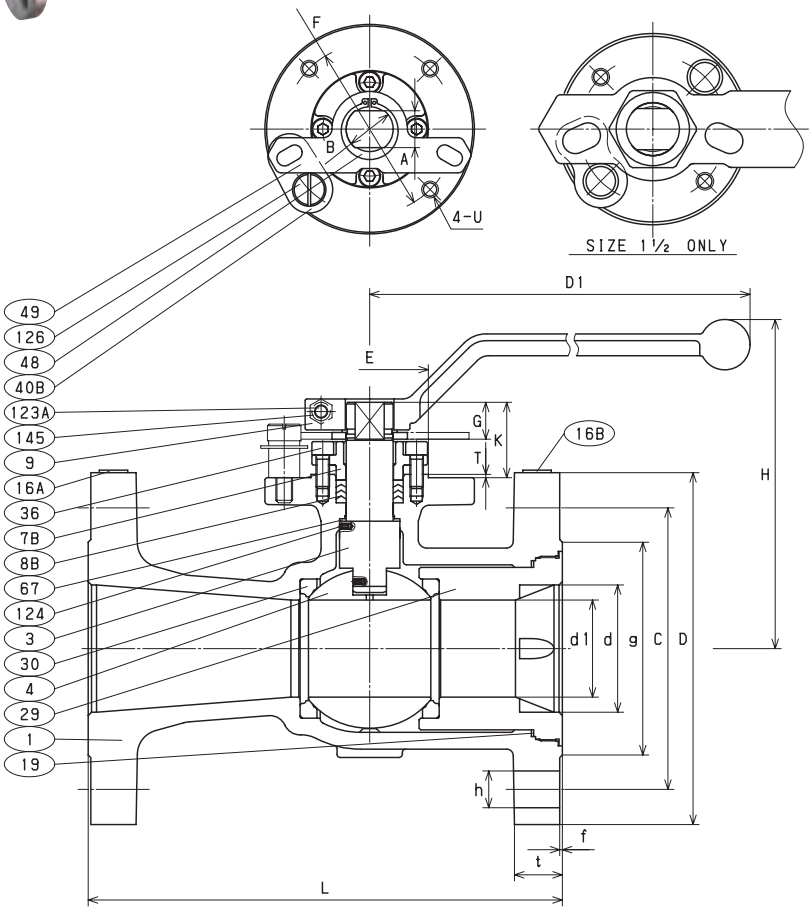

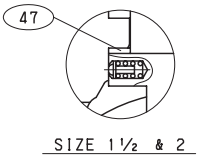

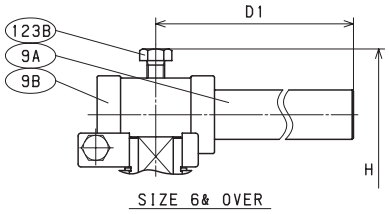

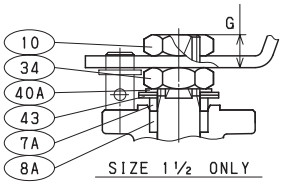

MATERIAL LIST

No.	Name of Parts	Materials
1	BODY	A216 Gr. WCB
3	STEM	A276 TYPE 316 or A479/A479M TYPE 316
4	BALL	A276 TYPE 316 or A351 Gr. CF8M
7A	GLAND	A276 TYPE 316 or A479/A479M TYPE 316
		(SIZE 1 1/2 ONLY)
7B	GLAND	A351 Gr. CF8 (SIZE 2 & OVER)
8A	GLAND PACKING	300SCTAM (C)
		PTFE (SIZE 1 1/2 ONLY)
8B	GLAND PACKING	300SCTAM (C)
		PTFE (SIZE 2 & OVER)
		300SCTAM-FS (C)
		FLEXIBLE GRAPHITE
9	HANDLE	STAINLESS STEEL (SIZE 1 1/2 ONLY)
		DUCTILE IRON (SIZE 2-4)
9A	HANDLE BAR	CARBON STEEL (SIZE 6 & OVER)
9B	HANDLE HEAD	DUCTILE IRON (SIZE 6 & OVER)
10	HANDLE NUT	STAINLESS STEEL (SIZE 1 1/2 ONLY)
16A	NAME PLATE	STAINLESS STEEL
16B	LEV PLATE	STAINLESS STEEL
19A	GASKET	PTFE
19B	GASKET	300SCTAM-FS (C)
		FLEXIBLE GRAPHITE
29	INSERT	A216 Gr. WCB (SIZE 1 1/2, 2, 8, 10)
		A105N (SIZE 3-6)
30	BALL SEAT	HYPATITE PTFE
34	GLAND NUT	STAINLESS STEEL (SIZE 1 1/2 ONLY)
36	GLAND BOLT	A193 Gr. B8M (SIZE 2 & OVER)
40A	LOCK PLATE	STAINLESS STEEL (SIZE 1 1/2 ONLY)
40B	KEY LOCK PLATE	STAINLESS STEEL
43	CONED DISC SPRING	STAINLESS STEEL (SIZE 1 1/2 ONLY)
47	THRUST WASHER	G/F PTFE (SIZE 1 1/2 & 2)
48	SNAP RING	CARBON STEEL (SIZE 2 & OVER)
49	STOPPER	STAINLESS STEEL (SIZE 2 & OVER)
67	STEM BEARING	G/F PTFE (SIZE 3 & OVER)
123A	HANDLE BOLT	STAINLESS STEEL (SIZE 2 & OVER)
123B	HANDLE BOLT	STAINLESS STEEL (SIZE 6 & OVER)
124	SPRING & PIN	STAINLESS STEEL
126	STOPPER PIN	STAINLESS STEEL
145	SPRING WASHER	STAINLESS STEEL (SIZE 2 & OVER)
155	SPACER	300SCTAM-FS (C)
		REINFORCED PTFE (SIZE 1 1/2 ONLY)

DIMENSIONS

Unit : inch

Nominal Size							End Flange								Mounting Dimensions for Actuator								
								Bolt Hole															
in.	mm	d	d1	H	D1	L	D	C	No.	h	Bolt Size	g	t	f	A	B	E	F	G	K	T	M	ISO 5211 Flange Type
1 1/2	40	1.50	1.18	5.00	7.09	7.5	6.12	4.50	4	0.88	3/4	2.88	0.81	0.06	0.552	0.709	1.378	1.969	0.55	1.26	0.08	1/4-20UNC	F05
2	50	2.00	1.50	5.20	9.06	8.5	6.50	5.00	8	0.75	5/8	3.62	0.88	0.06	0.670	0.867	2.166	2.756	0.67	1.34	0.08	5/16-18UNC	F07
3	80	3.00	2.28	7.76	15.75	11.125	8.25	6.62	8	0.88	3/4	5.00	1.12	0.06	0.867	1.103	2.756	4.016	0.87	1.77	0.08	3/8-16UNC	F10
4	100	4.00	3.00	8.39	15.75	12	10.00	7.88	8	0.88	3/4	6.19	1.25	0.06	0.867	1.103	2.756	4.016	0.87	1.77	0.08	3/8-16UNC	F10
6	150	6.00	4.49	9.69	29.53	15.875	12.50	10.62	12	0.88	3/4	8.50	1.44	0.06	1.063	1.418	3.347	4.921	1.06	1.97	0.08	1/2-13UNC	F12
8	200	8.00	5.67	11.54	39.37	16.5	15.00	13.00	12	1.00	7/8	10.62	1.62	0.06	1.418	1.890	3.937	5.512	1.42	2.48	0.08	5/8-11UNC	F14
10	250	10.00	7.36	13.62	59.06	18	17.50	15.25	16	1.12	1	12.75	1.88	0.06	1.811	2.363	5.119	6.496	1.81	3.07	0.08	3/4-10UNC	F16

600SCTBM
600SCTBM-FS



MATERIAL LIST

No.	Name of Parts	Materials
1	BODY	A105
2	BODY CAP	A105
3	STEM	A276 TYPE 316
4	BALL	A276 TYPE 316
7	GLAND	A351 Gr. CF8
8	GLAND PACKING	600SCTBM
		PTFE
		600SCTBM-FS
		FLEXIBLE GRAPHITE
19	GASKET	600SCTBM-FS
		GRAFOIL SPIRAL WOUND
9	HANDLE	DUCTILE IRON
20	PACKING WASHER	A276 TYPE 316
30	BALL SEAT	G/F MoM_2 PTFE
33	CAP NUT	A194 Gr. 2HM
35	CAP BOLT	A193 Gr. B7M
36	GLAND BOLT	ALLOY STEEL
45 A	O RING	NBR
45 B	O RING	NBR
47	THRUST WASHER	METAL BACKED PTFE
49	STOPPER	STAINLESS STEEL
67	STEM BEARING	G/F PTFE
123	HANDLE BOLT	CARBON STEEL
124 A	SPRING & PIN	A313 & A276 TYPE 316
124 B	RING SPRING	A276 TYPE 316
143	SEAT SPRING	A167 TYPE 304
150	SEAT RETAINER	A105 (1)
155	SPACER	600SCTBM-FS
		PTFE
175	RETAINER GLAND	600SCTBM-FS
		A105 (1)
176	RETAINER PACKING	600SCTBM-FS
		FLEXIBLE GRAPHITE

NOTE

(1) Zinc plating.

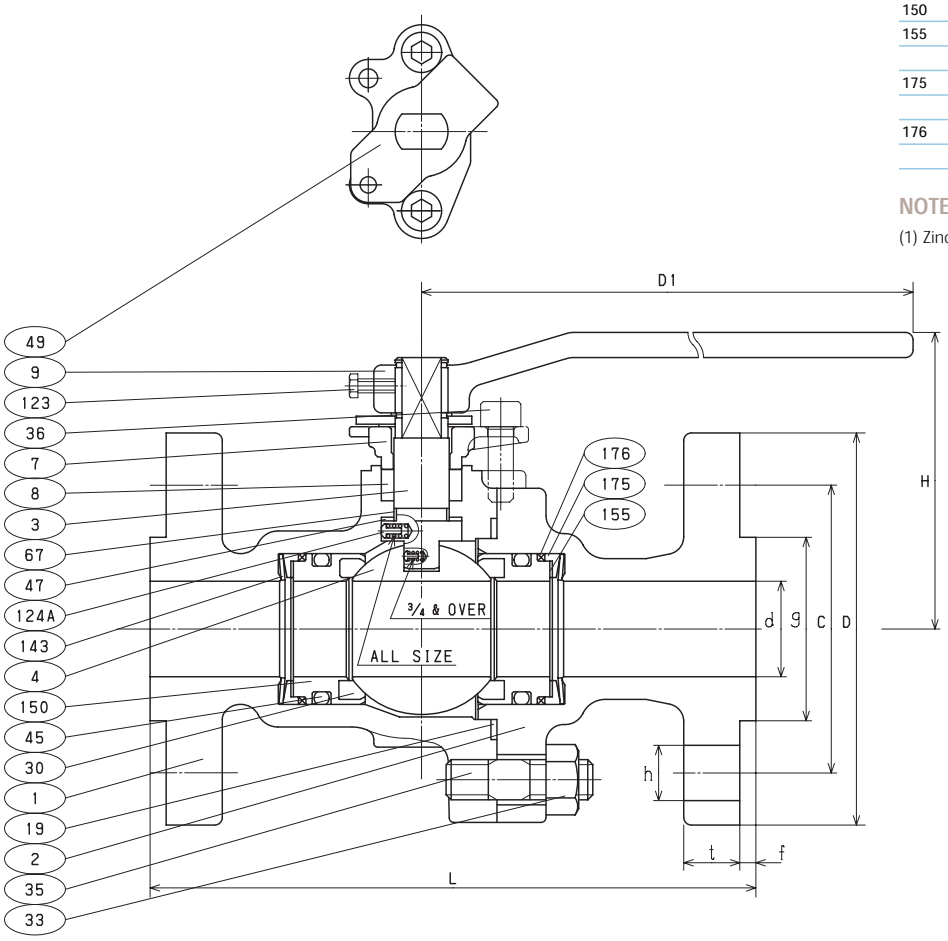

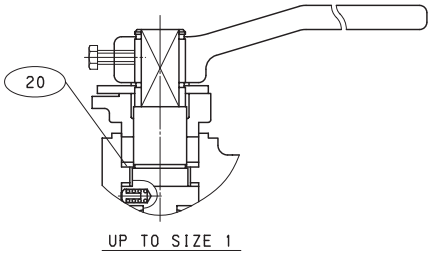

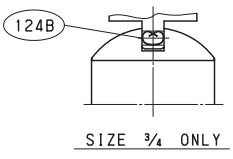

DIMENSIONS

Unit : inch

Nominal Size						End Flange							
							Bolt Hole						
in.	mm	d	H	D1	L	D	C	No.	h	Bolt Size	g	t	f
1/2	15	0.51	4.13	5.12	6.50	3.75	2.62	4	0.62	1/2	1.38	0.56	0.25
3/4	20	0.75	4.25	5.12	7.50	4.62	3.25	4	0.75	5/8	1.69	0.62	0.25
1	25	0.98	5.12	6.30	8.50	4.88	3.50	4	0.75	5/8	2.00	0.69	0.25
1 1/2	40	1.50	4.65	9.06	9.50	6.12	4.50	4	0.88	3/4	2.88	0.88	0.25

1500SCTBM
1500SCTBM-FS



MATERIAL LIST

No.	Name of Parts	Materials
1	BODY	A216 Gr. WCB
2	BODY CAP	A216 Gr. WCB
3	STEM	A276 TYPE 316
4	BALL	A276 TYPE 316
7	GLAND	A351 Gr. CF8
8	GLAND PACKING	1500SCTBM
		PTFE
		1500SCTBM-FS
		FLEXIBLE GRAPHITE
9	HANDLE	DUCTILE IRON
19	GASKET	1500SCTBM-FS
		GRAFOIL SPIRAL WOUND
30	BALL SEAT	MoM_2 NYLON
31	STEM WASHER	A276 TYPE 316
33	CAP NUT	A194 Gr. 2HM
35	CAP BOLT	A193 Gr. B7M
36	GLAND BOLT	ALLOY STEEL
45 A	O RING	NBR
45 B	O RING	NBR
47	THRUST WASHER	METAL BACKED PTFE
49	STOPPER	STAINLESS STEEL
67	STEM BEARING	G/F PTFE
85	PLUG	A576 Gr. 1025 (1)
123	HANDLE BOLT	CARBON STEEL
124	SPRING & PIN	A313 & A276 TYPE 316
143	SEAT SPRING	A167 TYPE 304
146	BACK-UP RING	PTFE
150	SEAT RETAINER	A105 (1)
155	SPACER	1500SCTBM-FS
		PTFE
175	RETAINER GLAND	1500SCTBM-FS
		A105 (1)
176	RETAINER PACKING	1500SCTBM-FS
		FLEXIBLE GRAPHITE

NOTE

(1) Zinc plating.

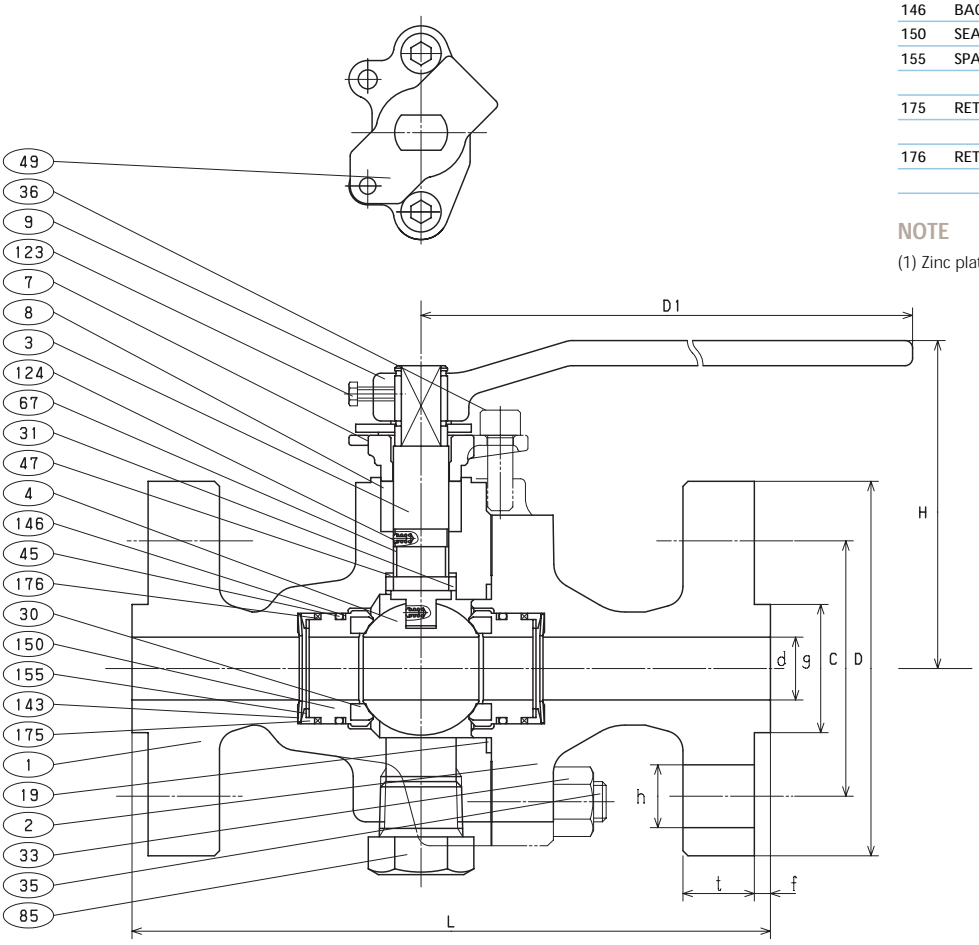

DIMENSIONS

Unit : inch

Nominal Size						End Flange							
							Bolt Hole						
in.	mm	d	H	D1	L	D	C	No.	h	Bolt Size	g	t	f
1/2	15	0.51	5.20	6.30	8.50	4.75	3.25	4	0.88	3/4	1.38	0.88	0.25
3/4	20	0.75	4.61	9.06	9.00	5.12	3.50	4	0.88	3/4	1.69	1.00	0.25
1	25	0.98	4.84	9.06	10.00	5.88	4.00	4	1.00	7/8	2.00	1.12	0.25
1 1/2	40	1.50	6.18	15.7	12.00	7.00	4.88	4	1.12	1	2.88	1.25	0.25

150UTBZM (C)
150UTBZM-FS (C)



MATERIAL LIST

No.	Name of Parts	Materials
1	BODY	A351 Gr. CF8M
2	BODY CAP	A351 Gr. CF8M
3	STEM	A276 TYPE 316
4	BALL	A351 Gr. CF8M or A276 TYPE 316
7A	GLAND	A276 TYPE 316 (UP TO SIZE 1)
7B	GLAND	A351 Gr. CF8 (SIZE 1 1/2 & OVER)
8A	GLAND PACKING	150UTBZM (C)
		PTFE (SIZE 1 ONLY)
8B	GLAND PACKING	150UTBZM (C)
		PTFE (EXCEPT FOR SIZE 1)
		150UTBZM-FS (C)
		FLEXIBLE GRAPHITE
9	HANDLE	STAINLESS STEEL (UP TO SIZE 1)
		DUCTILE IRON (SIZE 1 1/2-3)
9A	HANDLE BAR	CARBON STEEL (SIZE 4 & OVER)
9B	HANDLE HEAD	DUCTILE IRON (SIZE 4 & OVER)
10	HANDLE NUT	STAINLESS STEEL (UP TO SIZE 1)
16A	NAME PLATE	STAINLESS STEEL
16B	LEV PLATE	STAINLESS STEEL
19	GASKET	150UTBZM (C)
		PTFE
		150UTBZM-FS (C)
		FLEXIBLE GRAPHITE
30	BALL SEAT	HYPATITE PTFE
33	CAP NUT	A194 Gr. 8M
34	GLAND NUT	STAINLESS STEEL (UP TO SIZE 1)
35	CAP BOLT	A193 Gr. B8M
36	GLAND BOLT	A193 Gr. B8M
40A	LOCK PLATE	STAINLESS STEEL (UP TO SIZE 1)
40B	KEY LOCK PLATE	STAINLESS STEEL
43	CONED DISC SPRING	STAINLESS STEEL (UP TO SIZE 1)
47	THRUST WASHER	C/F PTFE (SIZE 1/2 & 3/4)
		G/F PTFE (SIZE 1-2)
48	SNAP RING	STAINLESS STEEL (SIZE 1 1/2 & OVER)
49	STOPPER	STAINLESS STEEL (SIZE 1 1/2 & OVER)
67	STEM BEARING	G/F PTFE (SIZE 3 & OVER)
123A	HANDLE BOLT	STAINLESS STEEL (SIZE 1 1/2 & OVER)
123B	HANDLE BOLT	STAINLESS STEEL (SIZE 4 & OVER)
124	SPRING & PIN	STAINLESS STEEL
126	STOPPER PIN	STAINLESS STEEL
145	SPRING WASHER	STAINLESS STEEL (SIZE 1 1/2 & OVER)
155	SPACER	150UTBZM-FS (C)
		REINFORCED PTFE (UP TO SIZE 1)

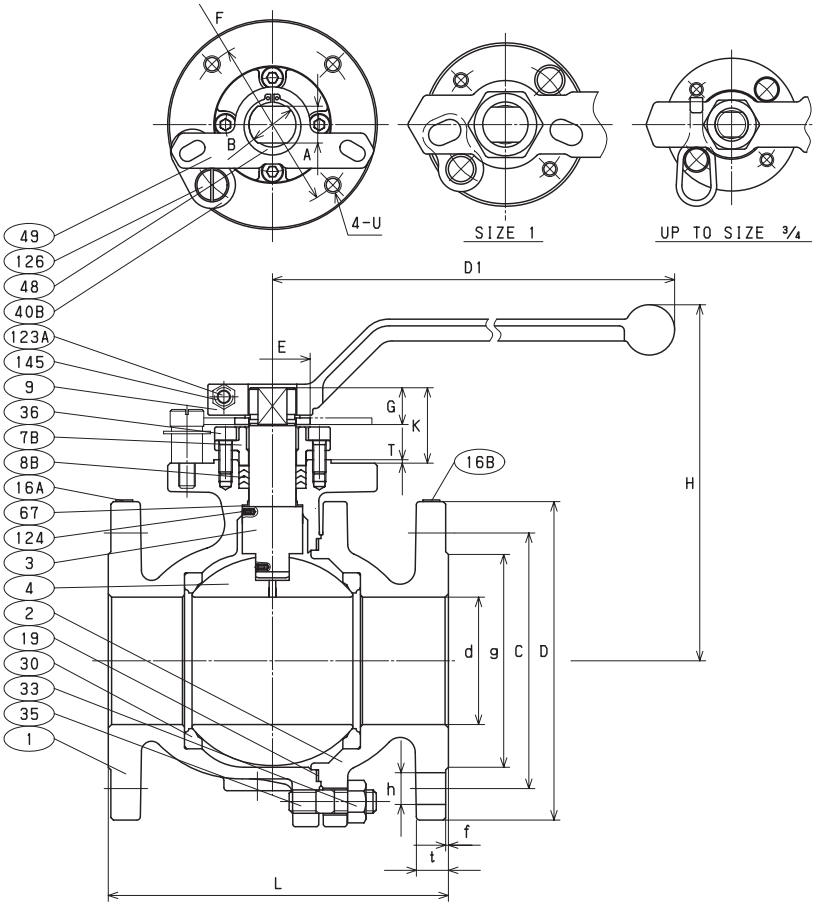

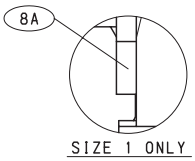

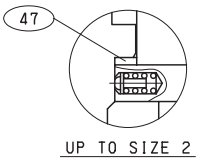

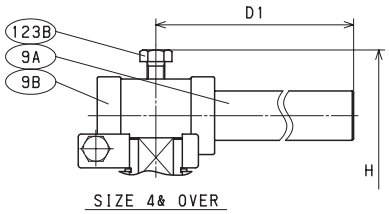

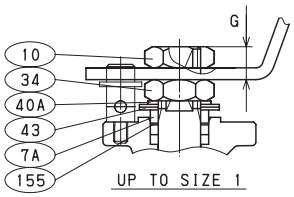

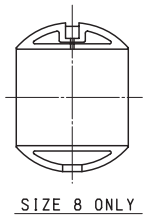

DIMENSIONS

Unit : inch

Nominal Size						End Flange								Mounting Dimensions for Actuator								
							Bolt Hole															
in.	mm	d	H	D1	L	D	C	No.	h	Bolt Size	g	t	f	A	B	E	F	G	K	T	U	ISO 5211 Flange Type
1/2	15	0.55	4.53	6.30	4.25	3.50	2.38	4	0.62	1/2	1.38	0.44	0.06	0.355	0.473	0.985	1.417	0.39	0.85	0.06	1/4-20UNC	F03
3/4	20	0.75	4.72	6.30	4.62	3.88	2.75	4	0.62	1/2	1.69	0.44	0.06	0.355	0.473	0.985	1.417	0.39	0.85	0.06	1/4-20UNC	F03
1	25	0.95	5.28	7.09	5.00	4.25	3.12	4	0.62	1/2	2.00	0.44	0.06	0.552	0.709	1.378	1.969	0.55	1.26	0.08	1/4-20UNC	F05
1 1/2	40	1.50	5.63	9.06	6.50	5.00	3.88	4	0.62	1/2	2.88	0.56	0.06	0.670	0.867	2.166	2.756	0.67	1.34	0.08	5/16-18UNC	F07
2	50	1.97	5.98	9.06	7.00	6.00	4.75	4	0.75	5/8	3.62	0.62	0.06	0.670	0.867	2.166	2.756	0.67	1.34	0.08	5/16-18UNC	F07
2 1/2	65	2.52	8.11	15.75	7.50	7.00	5.50	4	0.75	5/8	4.12	0.69	0.06	0.867	1.103	2.756	4.016	0.87	1.77	0.08	3/8-16UNC	F10
3	80	3.00	8.39	15.75	8.00	7.50	6.00	4	0.75	5/8	5.00	0.75	0.06	0.867	1.103	2.756	4.016	0.87	1.77	0.08	3/8-16UNC	F10
4	100	3.94	10.08	18.11	9.00	9.00	7.50	8	0.75	5/8	6.19	0.94	0.06	1.063	1.418	3.347	4.921	1.06	1.97	0.08	1/2-13UNC	F12
6	150	5.95	12.60	39.37	15.50	11.00	9.50	8	0.88	3/4	8.50	1.00	0.06	1.418	1.890	3.937	5.512	1.42	2.48	0.08	5/8-11UNC	F14
8	200	7.95	16.34	59.06	18.00	13.50	11.75	8	0.88	3/4	10.62	1.12	0.06	1.811	2.362	5.118	6.496	1.81	3.07	0.08	3/4-10UNC	F16

G-150UTBZM (C)

MATERIAL LIST

No.	Name of Parts	Materials
1	BODY	A351 Gr. CF8M
2	BODY CAP	A351 Gr. CF8M
3	STEM	A276 TYPE 316
4	BALL	A351 Gr. CF8M
7	GLAND	A351 Gr. CF8
8	GLAND PACKING	PTFE
16A	NAME PLATE	STAINLESS STEEL
16B	LEV PLATE	STAINLESS STEEL
19	GASKET	PTFE
30	BALL SEAT	HYPATITE PTFE
33	CAP NUT	A194 Gr. 8M
35	CAP BOLT	A193 Gr. B8M
36	GLAND BOLT	A193 Gr. B8
67	STEM BEARING	G/F PTFE
92	CONNECTOR	CARBON STEEL
93	BRACKET	DUCTILE IRON
99	BOLT	CARBON STEEL
102	GEAR UNIT	
124	SPRING & PIN	A313 & A276 TYPE 316

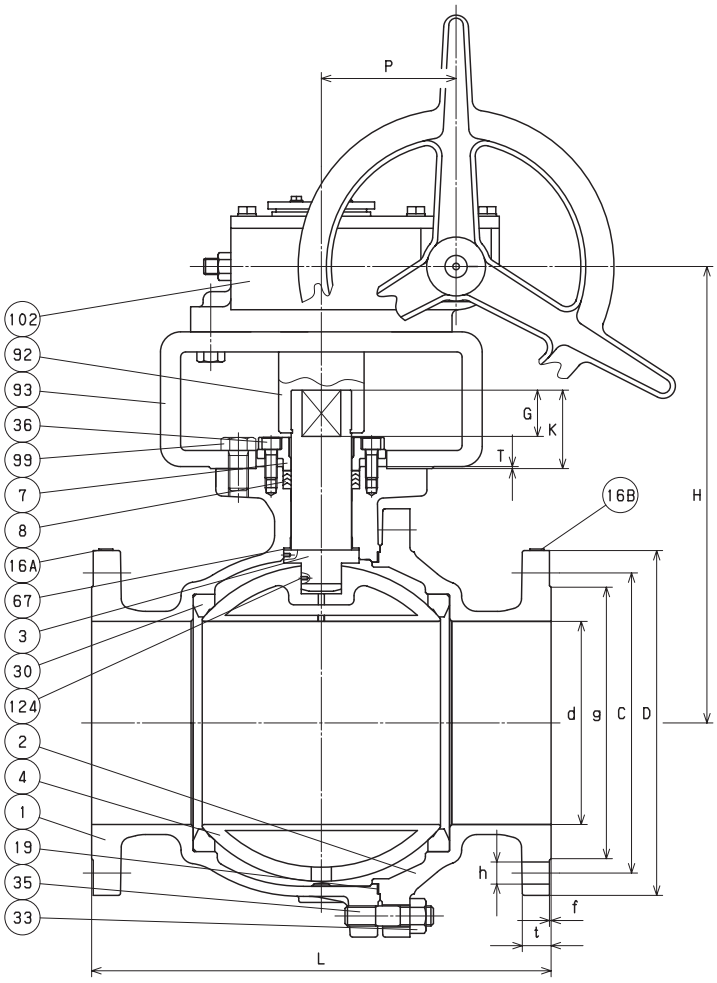

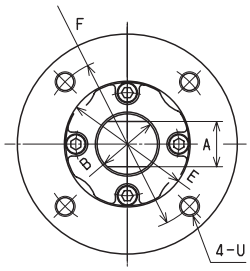

ACTUATOR MOUNTING

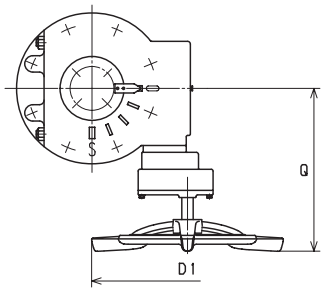

DIMENSIONS

Unit : inch

Nominal Size						End Flange										Mounting Dimensions for Actuator								
							Bolt Hole																	
in.	mm	d	H	D1	L	D	C	No.	h	Bolt Size	g	t	f	P	Q	A	B	E	F	G	K	T	U	ISO 5211 Flange Type
8	200	7.95	17.87	19.69	18.00	13.50	11.75	8	0.88	3/4	10.62	1.12	0.06	5.28	16.14	1.811	2.362	5.118	6.496	1.81	3.07	0.08	3/4-10UNC	F16
10	250	9.96	19.84	19.69	21.00	16.00	14.25	12	1.00	7/8	12.75	1.19	0.06	5.28	16.14	1.811	2.362	5.118	6.496	1.81	3.07	0.08	3/4-10UNC	F16

150UTAM (C)
150UTAM-FS (C)

MATERIAL LIST

No.	Name of Parts	Materials
1	BODY	A351 Gr. CF8
3	STEM	A276 TYPE 316
4	BALL	A276 TYPE 316
7	GLAND	A276 TYPE 316
8	GLAND PACKING	150UTAM (C)
		PTFE
		150UTAM-FS (C)
		FLEXIBLE GRAPHITE
9	HANDLE	STAINLESS STEEL
10	HANDLE NUT	STAINLESS STEEL
16	NAME PLATE	STAINLESS STEEL
19 A	GASKET	PTFE
19 B	GASKET	150UTAM-FS (C)
		FLEXIBLE GRAPHITE
29	INSERT	A351 Gr. CF8M
30	BALL SEAT	HYPATITE PTFE
34	GLAND NUT	STAINLESS STEEL
40 A	LOCK PLATE	STAINLESS STEEL
40 B	KEY LOCK PLATE	STAINLESS STEEL
43	CONED DISC SPRING	STAINLESS STEEL
47	THRUST WASHER	C/F PTFE (SIZE 1 ONLY)
67	STEM BEARING	C/F PTFE (SIZE 1/2 & 3/4)
124	RING SPRING	STAINLESS STEEL
126	STOPPER PIN	STAINLESS STEEL

NOTE

(1) All valves have an anti-static thrust washer or stem bearing insuring positive conductivity between body and stem.

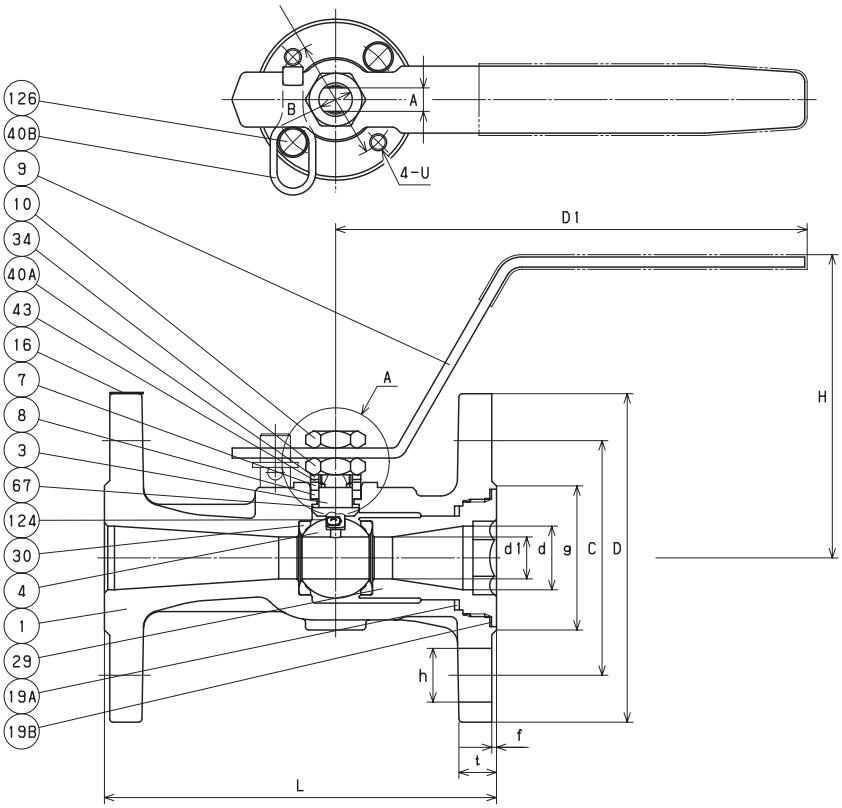

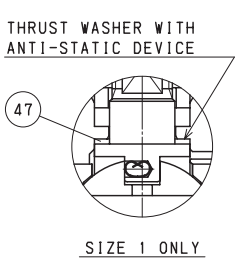

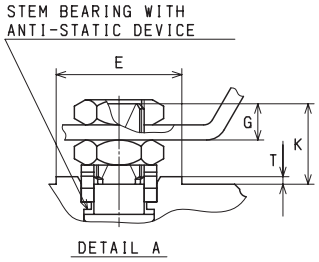

DIMENSIONS

Unit : inch

Nominal Size							End Flange								Mounting Dimensions for Actuator								
								Bolt Hole															
in.	mm	d	d1	H	D1	L	D	C	No.	h	Bolt Size	g	t	f	A	B	E	F	G	K	T	U	ISO 5211 Flange Type
1/2	15	0.49	0.39	3.50	5.52	4.25	3.50	2.38	4	0.62	1/2	1.38	0.44	0.06	0.276	0.394	0.985	1.417	0.28	0.63	0.06	1/4-20UNC	F03
3/4	20	0.75	0.49	3.58	5.52	4.625	3.88	2.75	4	0.62	1/2	1.69	0.44	0.06	0.276	0.394	0.985	1.417	0.28	0.63	0.06	1/4-20UNC	F03
1	25	0.98	0.67	3.94	6.30	5	4.25	3.12	4	0.62	1/2	2.00	0.44	0.06	0.355	0.473	0.985	1.417	0.39	0.85	0.06	1/4-20UNC	F03

150UTAM (C)
150UTAM-FS (C)

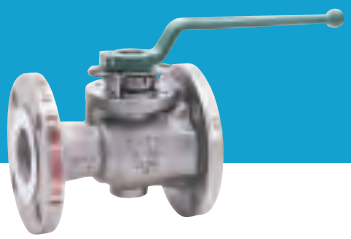

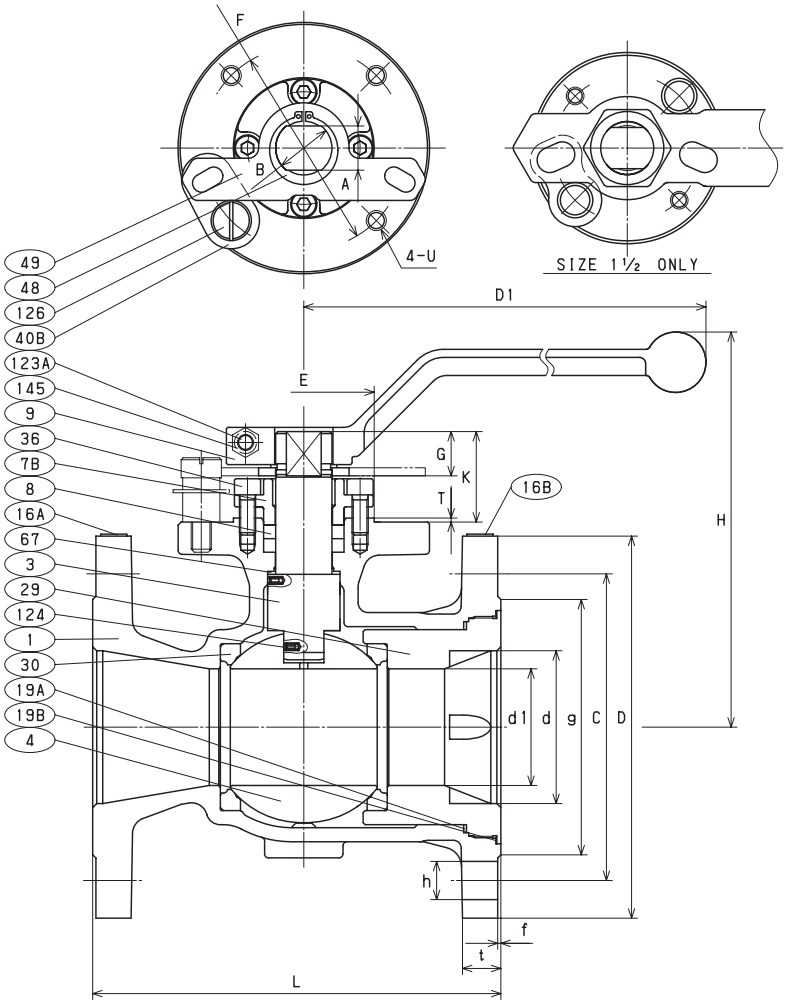

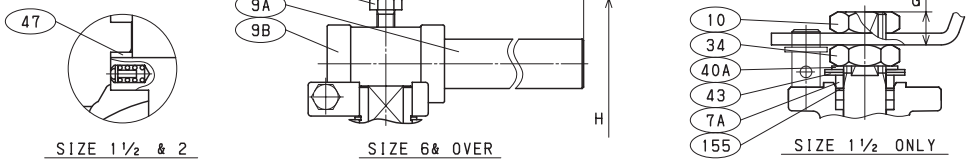

MATERIAL LIST

No.	Name of Parts	Materials
1	BODY	A351 Gr. CF8M
3	STEM	A276 TYPE 316 or A479/A479M TYPE 316
4	BALL	A276 TYPE 316 or A351 Gr. CF8M
7A	GLAND	A276 TYPE 316 or A479/A479M TYPE 316
		(SIZE 1 1/2 ONLY)
7B	GLAND	A351 Gr. CF8 (SIZE 2 & OVER)
8A	GLAND PACKING	150UTAM (C)
		PTFE (SIZE 1 1/2 ONLY)
8B	GLAND PACKING	150UTAM (C)
		PTFE (SIZE 2 & OVER)
		150UTAM-FS (C)
		FLEXIBLE GRAPHITE
9	HANDLE	STAINLESS STEEL (SIZE 1 1/2 ONLY)
		DUCTILE IRON (SIZE 2-4)
9A	HANDLE BAR	CARBON STEEL (SIZE 6 & OVER)
9B	HANDLE HEAD	DUCTILE IRON (SIZE 6 & OVER)
10	HANDLE NUT	STAINLESS STEEL (SIZE 1 1/2 ONLY)
16A	NAME PLATE	STAINLESS STEEL
16B	LEV PLATE	STAINLESS STEEL
19A	GASKET	PTFE
19B	GASKET	150UTAM-FS (C)
		FLEXIBLE GRAPHITE
29	INSERT	A351 Gr. CF8M (SIZE 1 1/2, 2, 8, 10)
		A182 Gr. F316 (SIZE 3-6)
30	BALL SEAT	HYPATITE PTFE
34	GLAND NUT	STAINLESS STEEL (SIZE 1 1/2 ONLY)
36	GLAND BOLT	A193 Gr. B8M (SIZE 2 & OVER)
40A	LOCK PLATE	STAINLESS STEEL (SIZE 1 1/2 ONLY)
40B	KEY LOCK PLATE	STAINLESS STEEL
43	CONED DISC SPRING	STAINLESS STEEL (SIZE 1 1/2 ONLY)
47	THRUST WASHER	G/F PTFE (SIZE 1 1/2 & 2)
48	SNAP RING	STAINLESS STEEL (SIZE 2 & OVER)
49	STOPPER	STAINLESS STEEL (SIZE 2 & OVER)
67	STEM BEARING	G/F PTFE (SIZE 3 & OVER)
123A	HANDLE BOLT	STAINLESS STEEL (SIZE 2 & OVER)
123B	HANDLE BOLT	STAINLESS STEEL (SIZE 6 & OVER)
124	SPRING & PIN	STAINLESS STEEL
126	STOPPER PIN	STAINLESS STEEL
145	SPRING WASHER	STAINLESS STEEL (SIZE 2 & OVER)
155	SPACER	150UTAM-FS (C)
		REINFORCED PTFE (SIZE 1 1/2 ONLY)

DIMENSIONS

Unit : inch

Nominal Size							End Flange								Mounting Dimensions for Actuator								
								Bolt Hole															
in.	mm	d	d1	H	D1	L	D	C	No.	h	Bolt Size	g	t	f	A	B	E	F	G	K	T	U	ISO 5211 Flange Type
1 1/2	40	1.50	1.18	5.00	7.09	6.5	5.00	3.88	4	0.62	1/2	2.88	0.56	0.06	0.552	0.709	1.378	1.969	0.55	1.26	0.08	1/4-20UNC	F05
2	50	2.00	1.50	5.20	9.06	7	6.00	4.75	4	0.75	5/8	3.62	0.62	0.06	0.670	0.867	2.166	2.756	0.67	1.34	0.08	5/16-18UNC	F07
3	80	3.00	2.28	7.76	15.75	8	7.50	6.00	4	0.75	5/8	5.00	0.75	0.06	0.867	1.103	2.756	4.016	0.87	1.77	0.08	3/8-16UNC	F10
4	100	4.00	3.00	8.39	15.75	9	9.00	7.50	8	0.75	5/8	6.19	0.94	0.06	0.867	1.103	2.756	4.016	0.87	1.77	0.08	3/8-16UNC	F10
6	150	6.00	4.49	9.69	29.53	10.5	11.00	9.50	8	0.88	3/4	8.50	1.00	0.06	1.063	1.418	3.347	4.921	1.06	1.97	0.08	1/2-13UNC	F12
8	200	8.00	5.67	11.54	39.37	11.5	13.50	11.75	8	0.88	3/4	10.62	1.12	0.06	1.418	1.890	3.937	5.512	1.42	2.48	0.08	5/8-11UNC	F14
10	250	10.00	7.36	13.62	59.06	13	16.00	14.25	12	1.00	7/8	12.75	1.19	0.06	1.811	2.363	5.119	6.496	1.81	3.07	0.08	3/4-10UNC	F16

300UTBZM (C)
300UTBZM-FS (C)



MATERIAL LIST

No.	Name of Parts	Materials
1	BODY	A351 Gr. CF8M
2	BODY CAP	A351 Gr. CF8M
3	STEM	A276 TYPE 316
4	BALL	A351 Gr. CF8M or A276 TYPE 316
7A	GLAND	A276 TYPE 316 (UP TO SIZE 1)
7B	GLAND	A351 Gr. CF8 (SIZE 1 1/2 & OVER)
8A	GLAND PACKING	300UTBZM (C)
		PTFE (SIZE 1 ONLY)
8B	GLAND PACKING	300UTBZM (C)
		PTFE (EXCEPT FOR SIZE 1)
		300UTBZM-FS (C)
		FLEXIBLE GRAPHITE
9	HANDLE	STAINLESS STEEL (UP TO SIZE 1)
		DUCTILE IRON (SIZE 1 1/2-3)
9A	HANDLE BAR	CARBON STEEL (SIZE 4 & OVER)
9B	HANDLE HEAD	DUCTILE IRON (SIZE 4 & OVER)
10	HANDLE NUT	STAINLESS STEEL (UP TO SIZE 1)
16A	NAME PLATE	STAINLESS STEEL
16B	LEV PLATE	STAINLESS STEEL
19	GASKET	300UTBZM (C)
		PTFE
		300UTBZM-FS (C)
		FLEXIBLE GRAPHITE
30	BALL SEAT	HYPATITE PTFE
33	CAP NUT	A194 Gr. 8M
34	GLAND NUT	STAINLESS STEEL (UP TO SIZE 1)
35	CAP BOLT	A193 Gr. B8M
36	GLAND BOLT	A193 Gr. B8M
40A	LOCK PLATE	STAINLESS STEEL (UP TO SIZE 1)
40B	KEY LOCK PLATE	STAINLESS STEEL
43	CONED DISC SPRING	STAINLESS STEEL (UP TO SIZE 1)
47	THRUST WASHER	C/F PTFE (SIZE 1/2 & 3/4)
		G/F PTFE (SIZE 1-2)
48	SNAP RING	STAINLESS STEEL (SIZE 1 1/2 & OVER)
49	STOPPER	STAINLESS STEEL (SIZE 1 1/2 & OVER)
67	STEM BEARING	G/F PTFE (SIZE 3 & OVER)
123A	HANDLE BOLT	STAINLESS STEEL (SIZE 1 1/2 & OVER)
123B	HANDLE BOLT	STAINLESS STEEL (SIZE 4 & OVER)
124	SPRING & PIN	STAINLESS STEEL
126	STOPPER PIN	STAINLESS STEEL
145	SPRING WASHER	STAINLESS STEEL (SIZE 1 1/2 & OVER)
155	SPACER	300UTBZM-FS (C)
		REINFORCED PTFE (UP TO SIZE 1)

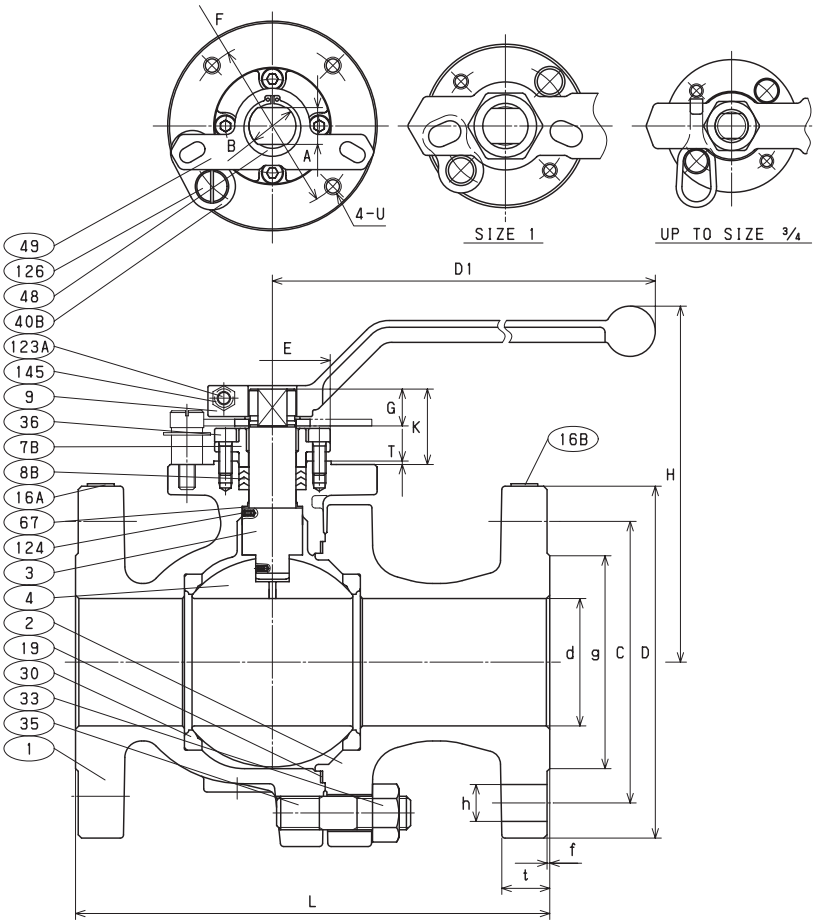

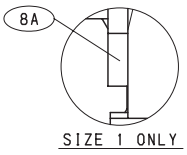

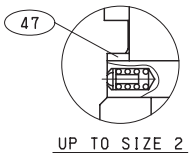

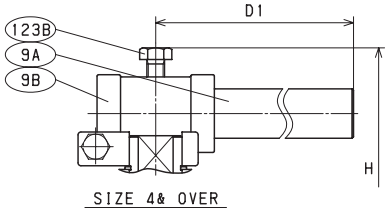

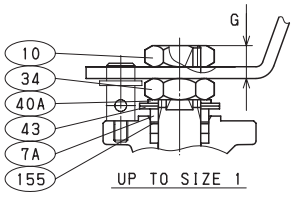

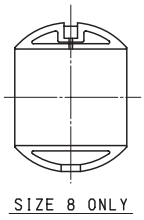

DIMENSIONS

Unit : inch

Nominal Size						End Flange								Mounting Dimensions for Actuator								
							Bolt Hole															
in.	mm	d	H	D1	L	D	C	No.	h	Bolt Size	g	t	f	A	B	E	F	G	K	T	U	ISO 5211 Flange Type
1/2	15	0.55	4.53	6.30	5.50	3.75	2.62	4	0.62	1/2	1.38	0.56	0.06	0.355	0.473	0.985	1.417	0.39	0.85	0.06	1/4-20UNC	F03
3/4	20	0.75	4.72	6.30	6.00	4.62	3.25	4	0.75	5/8	1.69	0.62	0.06	0.355	0.473	0.985	1.417	0.39	0.85	0.06	1/4-20UNC	F03
1	25	0.95	5.28	7.09	6.50	4.88	3.50	4	0.75	5/8	2.00	0.69	0.06	0.552	0.709	1.378	1.969	0.55	1.26	0.08	1/4-20UNC	F05
1 1/2	40	1.50	5.63	9.06	7.50	6.14	4.50	4	0.88	3/4	2.88	0.81	0.06	0.670	0.867	2.166	2.756	0.67	1.34	0.08	5/16-18UNC	F07
2	50	1.97	5.98	9.06	8.50	6.50	5.00	8	0.75	5/8	3.62	0.88	0.06	0.670	0.867	2.166	2.756	0.67	1.34	0.08	5/16-18UNC	F07
2 1/2	65	2.52	8.11	15.75	9.50	7.50	5.88	8	0.88	3/4	4.12	1.00	0.06	0.867	1.103	2.756	4.016	0.87	1.77	0.08	3/8-16UNC	F10
3	80	3.00	8.39	15.75	11.12	8.25	6.62	8	0.88	3/4	5.00	1.12	0.06	0.867	1.103	2.756	4.016	0.87	1.77	0.08	3/8-16UNC	F10
4	100	3.94	10.08	29.50	12.00	10.00	7.88	8	0.88	3/4	6.19	1.25	0.06	1.063	1.418	3.347	4.921	1.06	1.97	0.08	1/2-13UNC	F12
6	150	5.95	12.60	39.37	15.88	12.50	10.62	12	0.88	3/4	8.50	1.44	0.06	1.418	1.890	3.937	5.512	1.42	2.48	0.08	5/8-11UNC	F14
8	200	7.95	16.34	59.06	19.75	15.00	13.00	12	1.00	7/8	10.62	1.62	0.06	1.811	2.362	5.118	6.496	1.81	3.07	0.08	3/4-10UNC	F16

300UTAM (C)
300UTAM-FS (C)

MATERIAL LIST

No.	Name of Parts	Materials
1	BODY	A351 Gr. CF8M
3	STEM	A276 TYPE 316
4	BALL	A276 TYPE 316
7	GLAND	A276 TYPE 316
8	GLAND PACKING	300UTAM (C)
		PTFE
		300UTAM-FS (C)
		FLEXIBLE GRAPHITE
9	HANDLE	STAINLESS STEEL
10	HANDLE NUT	STAINLESS STEEL
16	NAME PLATE	STAINLESS STEEL
19A	GASKET	PTFE
19B	GASKET	300UTAM-FS (C)
		FLEXIBLE GRAPHITE
29	INSERT	A351 Gr. CF8M
30	BALL SEAT	HYPATITE PTFE
34	GLAND NUT	STAINLESS STEEL
40A	LOCK PLATE	STAINLESS STEEL
40B	KEY LOCK PLATE	STAINLESS STEEL
43	CONED DISC SPRING	STAINLESS STEEL
47	THRUST WASHER	C/F PTFE (SIZE 1 ONLY)
67	STEM BEARING	C/F PTFE (SIZE 1/2 & 3/4)
124	RING SPRING	STAINLESS STEEL
126	STOPPER PIN	STAINLESS STEEL

NOTE

(1) All valves have an anti-static thrust washer or stem bearing insuring positive conductivity between body and stem.

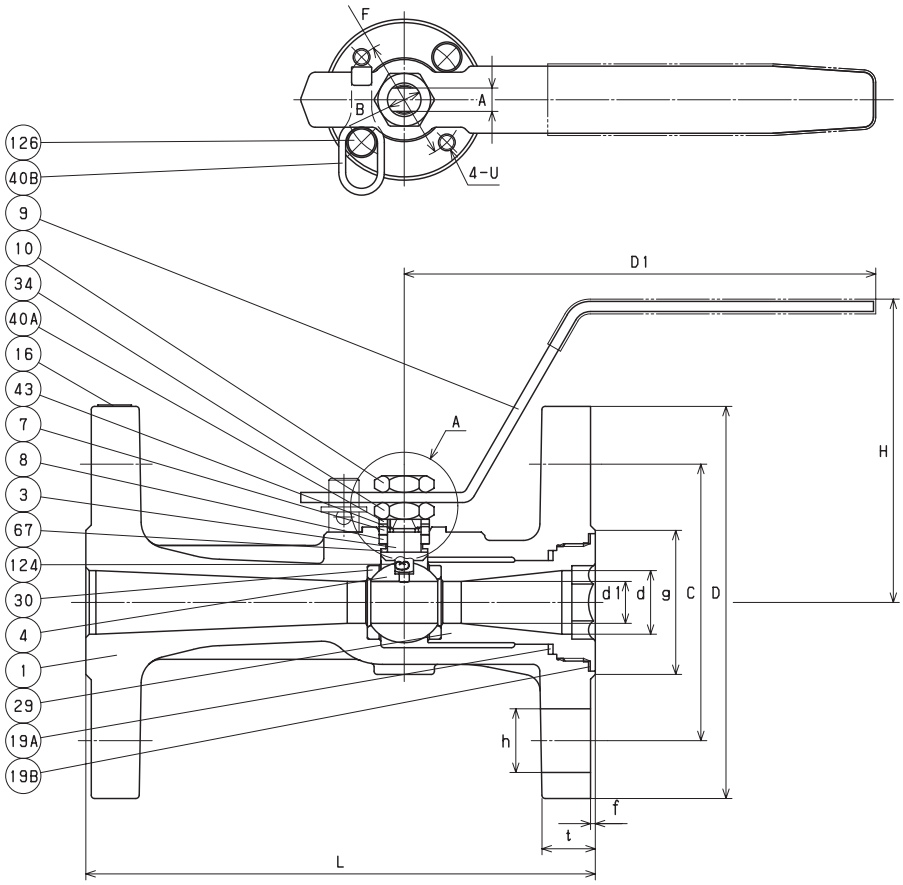

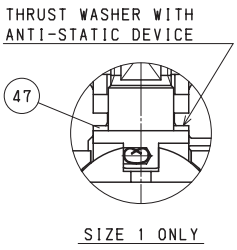

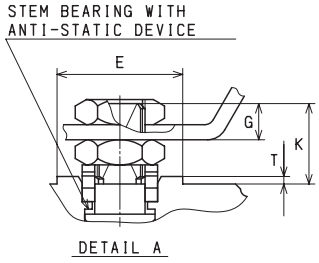

DIMENSIONS

Unit : inch

Nominal Size							End Flange								Mounting Dimensions for Actuator								
								Bolt Hole															
in.	mm	d	d1	H	D1	L	D	C	No.	h	Bolt Size	g	t	f	A	B	E	F	G	K	T	U	ISO 5211 Flange Type
1/2	15	0.49	0.39	3.50	5.52	4.5	3.75	2.62	4	0.62	1/2	1.38	0.56	0.06	0.276	0.394	0.985	1.417	0.28	0.63	0.06	1/4-20UNC	F03
3/4	20	0.75	0.49	3.58	5.52	6	4.62	3.25	4	0.75	5/8	1.69	0.62	0.06	0.276	0.394	0.985	1.417	0.28	0.63	0.06	1/4-20UNC	F03
1	25	0.98	0.67	3.94	6.30	6.5	4.88	3.50	4	0.75	5/8	2.00	0.69	0.06	0.355	0.473	0.985	1.417	0.39	0.85	0.06	1/4-20UNC	F03

300UTAM (C)
300UTAM-FS (C)

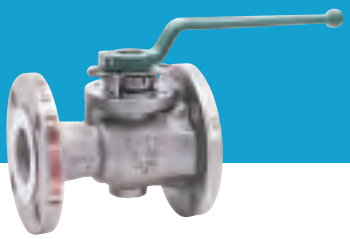

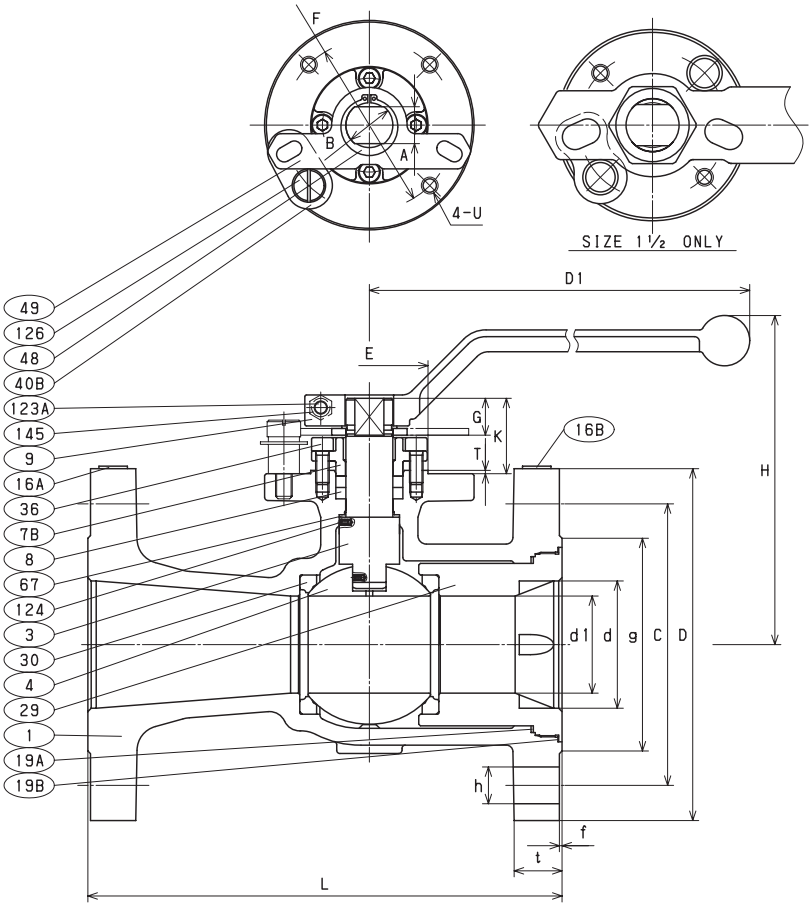

MATERIAL LIST

No.	Name of Parts	Materials
1	BODY	A351 Gr. CF8M
3	STEM	A276 TYPE 316 or A479/A479M TYPE 316
4	BALL	A276 TYPE 316 or A351 Gr. CF8M
7A	GLAND	A276 TYPE 316 or A479/A479M TYPE 316
		(SIZE 1½ ONLY)
7B	GLAND	A351 Gr. CF8 (SIZE 2 & OVER)
8A	GLAND PACKING	300UTAM (C)
		PTFE (SIZE 1½ ONLY)
8B	GLAND PACKING	300UTAM (C)
		PTFE (SIZE 2 & OVER)
		300UTAM-FS (C)
		FLEXIBLE GRAPHITE
9	HANDLE	STAINLESS STEEL (SIZE 1½ ONLY)
		DUCTILE IRON (SIZE 2-4)
9A	HANDLE BAR	CARBON STEEL (SIZE 6 & OVER)
9B	HANDLE HEAD	DUCTILE IRON (SIZE 6 & OVER)
10	HANDLE NUT	STAINLESS STEEL (SIZE 1½ ONLY)
16A	NAME PLATE	STAINLESS STEEL
16B	LEV PLATE	STAINLESS STEEL
19A	GASKET	PTFE
19B	GASKET	300UTAM-FS (C)
		FLEXIBLE GRAPHITE
29	INSERT	A351 Gr. CF8M (SIZE 1½, 2, 8, 10)
		A182 Gr. F316 (SIZE 3-6)
30	BALL SEAT	HYPATITE PTFE
34	GLAND NUT	STAINLESS STEEL (SIZE 1½ ONLY)
36	GLAND BOLT	A193 Gr. B8M (SIZE 2 & OVER)
40A	LOCK PLATE	STAINLESS STEEL (SIZE 1½ ONLY)
40B	KEY LOCK PLATE	STAINLESS STEEL
43	CONED DISC SPRING	STAINLESS STEEL (SIZE 1½ ONLY)
47	THRUST WASHER	G/F PTFE (SIZE 1½ & 2)
48	SNAP RING	STAINLESS STEEL (SIZE 2 & OVER)
49	STOPPER	STAINLESS STEEL (SIZE 2 & OVER)
67	STEM BEARING	G/F PTFE (SIZE 3 & OVER)
123A	HANDLE BOLT	STAINLESS STEEL (SIZE 2 & OVER)
123B	HANDLE BOLT	STAINLESS STEEL (SIZE 6 & OVER)
124	SPRING & PIN	STAINLESS STEEL
126	STOPPER PIN	STAINLESS STEEL
145	SPRING WASHER	STAINLESS STEEL (SIZE 1½ & OVER)
155	SPACER	300UTAM-FS (C)
		REINFORCED PTFE (SIZE 1½ ONLY)

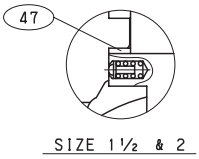

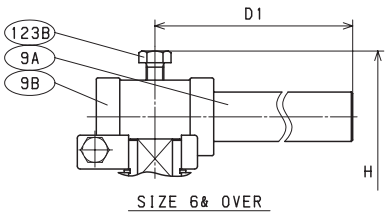

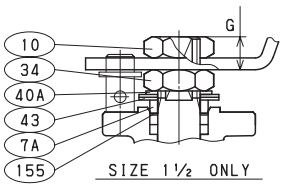

DIMENSIONS

Unit : inch

Nominal Size							End Flange								Mounting Dimensions for Actuator								
								Bolt Hole															
in.	mm	d	d1	H	D1	L	D	C	No.	h	Bolt Size	g	t	f	A	B	E	F	G	K	T	M	ISO 5211 Flange Type
1½	40	1.50	1.18	5.00	7.09	7.5	6.12	4.50	4	0.88	¾	2.88	0.81	0.06	0.552	0.709	1.378	1.969	0.55	1.26	0.08	¼-20UNC	F05
2	50	2.00	1.50	5.20	9.06	8.5	6.50	5.00	8	0.75	⅝	3.62	0.88	0.06	0.670	0.867	2.166	2.756	0.67	1.34	0.08	5/16-18UNC	F07
3	80	3.00	2.28	7.76	15.75	11.125	8.25	6.62	8	0.88	¾	5.00	1.12	0.06	0.867	1.103	2.756	4.016	0.87	1.77	0.08	⅜-16UNC	F10
4	100	4.00	3.00	8.39	15.75	12	10.0	7.88	8	0.88	¾	6.19	1.25	0.06	0.867	1.103	2.756	4.016	0.87	1.77	0.08	⅜-16UNC	F10
6	150	6.00	4.49	9.69	29.53	15.875	12.50	10.62	12	0.88	¾	8.50	1.44	0.06	1.063	1.418	3.347	4.921	1.06	1.97	0.08	½-13UNC	F12
8	200	8.00	5.67	11.54	39.37	16.5	15.00	13.00	12	1.00	⅞	10.62	1.62	0.06	1.418	1.890	3.937	5.512	1.42	2.48	0.08	⅝-11UNC	F14
10	250	10.00	7.36	13.62	59.06	18	17.50	15.25	16	1.12	1	12.75	1.88	0.06	1.811	2.363	5.119	6.496	1.81	3.07	0.08	¾-10UNC	F16

600UTBM
600UTBM-FS



MATERIAL LIST

No.	Name of Parts	Materials
1	BODY	A351 Gr. CF8M
2	BODY CAP	A351 Gr. CF8M
3	STEM	A276 TYPE 316
4	BALL	A276 TYPE 316
7	GLAND	A351 Gr. CF8
8	GLAND PACKING	600UTBM
		PTFE
		600UTBM-FS
		FLEXIBLE GRAPHITE
19	GASKET	600UTBM-FS
		GRAFOIL SPIRAL WOUND
9	HANDLE	DUCTILE IRON
20	PACKING WASHER	A276 TYPE 316
30	BALL SEAT	G/F MoS2 PTFE
33	CAP NUT	A194 Gr. 8M
35	CAP BOLT	A193 Gr. B8M
36	GLAND BOLT	A193 Gr. B8
45 A	O RING	FKM
45 B	O RING	FKM
47	THRUST WASHER	METAL BACKED PTFE
48	SNAP RING	A276 TYPE 304
49	STOPPER	A276 TYPE 304
67	STEM BEARING	G/F PTFE
124 A	SPRING & PIN	A313 & A276 TYPE 316
124 B	RING SPRING	A276 TYPE 316
143	SEAT SPRING	INCONEL® X-750
150	SEAT RETAINER	A276 TYPE 304
155	SPACER	600UTBM-FS
		PTFE
175	RETAINER GLAND	600UTBM-FS
		A276 TYPE 316
176	RETAINER PACKING	600UTBM-FS
		FLEXIBLE GRAPHITE

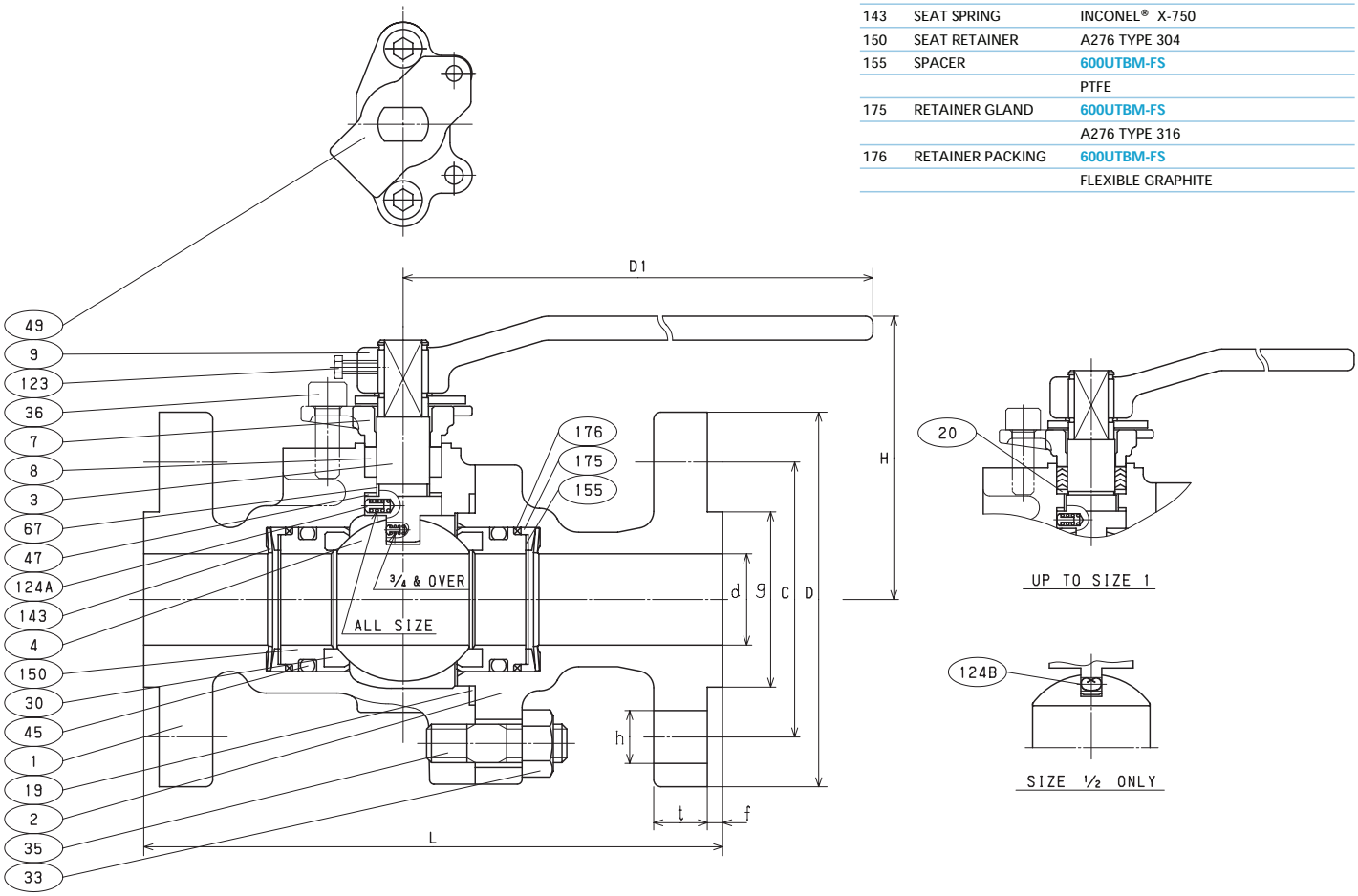

DIMENSIONS

Unit : inch

Nominal Size						End Flange							
							Bolt Hole						
in.	mm	d	H	D1	L	D	C	No.	h	Bolt Size	g	t	f
1/2	15	0.51	4.13	5.12	6.50	3.75	2.62	4	0.62	1/2	1.38	0.56	0.25
3/4	20	0.75	4.25	5.12	7.50	4.62	3.25	4	0.75	5/8	1.69	0.62	0.25
1	25	0.98	5.12	6.30	8.50	4.88	3.50	4	0.75	5/8	2.00	0.69	0.25
1 1/2	40	1.50	4.65	9.06	9.50	6.12	4.50	4	0.88	3/4	2.88	0.88	0.25

1500UTBM
1500UTBM-FS



MATERIAL LIST

No.	Name of Parts	Materials
1	BODY	A351 Gr. CF8M
2	BODY CAP	A351 Gr. CF8M
3	STEM	A276 TYPE 316
4	BALL	A276 TYPE 316
7	GLAND	A351 Gr. CF8
8	GLAND PACKING	1500UTBM
		PTFE
		1500UTBM-FS
		FLEXIBLE GRAPHITE
9	HANDLE	DUCTILE IRON
19	GASKET	1500UTBM-FS
		GRAFOIL SPIRAL WOUND
30	BALL SEAT	MoS_2 NYLON
31	STEM WASHER	A276 TYPE 316
33	CAP NUT	A194 Gr. 8M
35	CAP BOLT	A193 Gr. B8M
36	GLAND BOLT	A193 Gr. B8
45 A	O RING	FKM
45 B	O RING	FKM
47	THRUST WASHER	METAL BACKED PTFE
49	STOPPER	A276 TYPE 304
67	STEM BEARING	G/F PTFE
85	PLUG	A276 TYPE 316
123	HANDLE BOLT	CARBON STEEL
124	SPRING & PIN	A313 & A276 TYPE 316
143	SEAT SPRING	INCONEL® X-750
146	BACK-UP RING	PTFE
150	SEAT RETAINER	A276 TYPE 316
155	SPACER	1500UTBM-FS
		PTFE
175	RETAINER GLAND	1500UTBM-FS
		A276 TYPE 316
176	RETAINER PACKING	1500UTBM-FS
		FLEXIBLE GRAPHITE

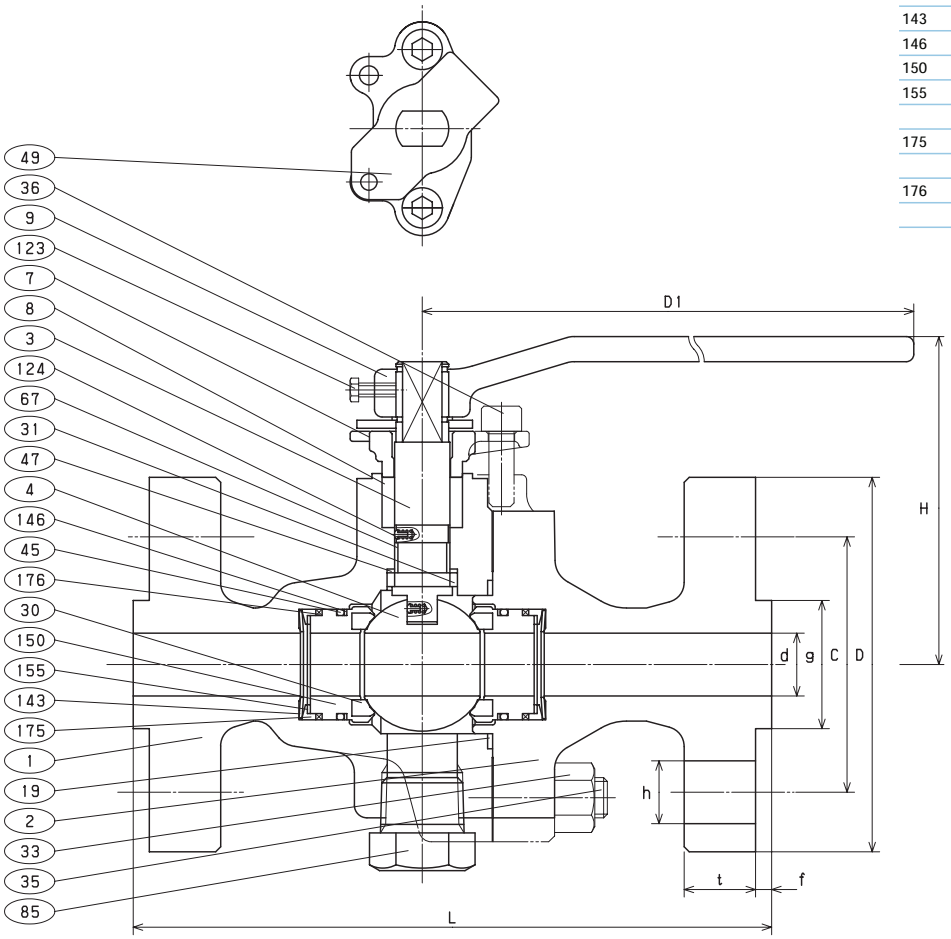

DIMENSIONS

Unit : inch

Nominal Size						End Flange							
							Bolt Hole						
in.	mm	d	H	D1	L	D	C	No.	h	Bolt Size	g	t	f
1/2	15	0.51	5.20	6.30	8.50	4.75	3.25	4	0.88	3/4	1.38	0.88	0.25
3/4	20	0.75	4.61	9.06	9.00	5.12	3.50	4	0.88	3/4	1.69	1.00	0.25
1	25	0.98	4.84	9.06	10.00	5.88	4.00	4	1.00	7/8	2.00	1.12	0.25
1 1/2	40	1.50	6.18	15.7	12.00	7.00	4.88	4	1.12	1	2.88	1.25	0.25

150UTALM



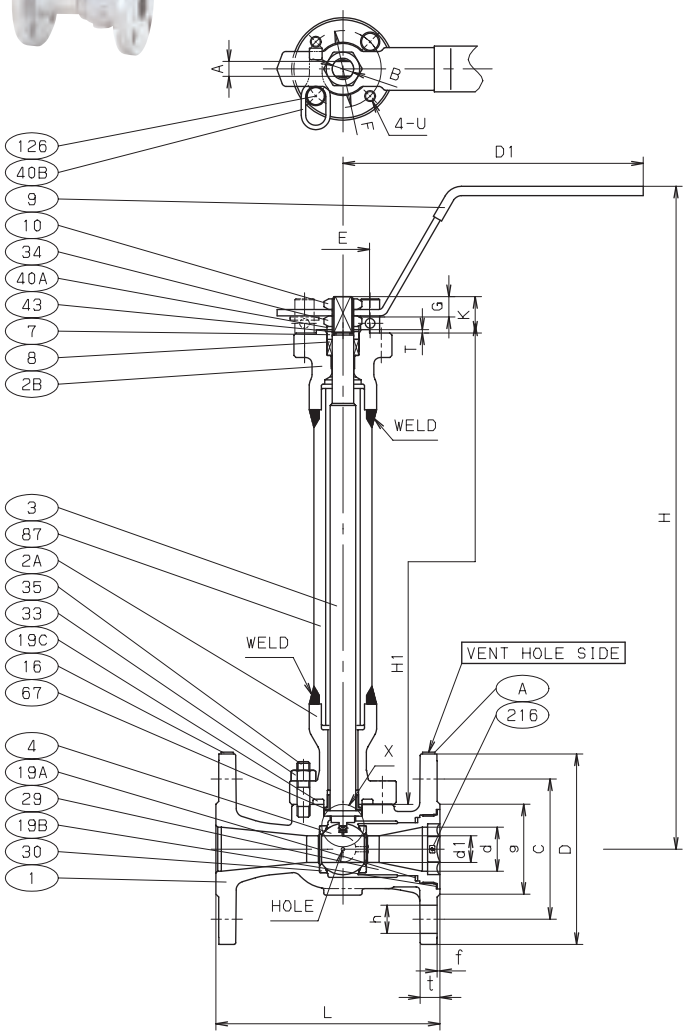

MATERIAL LIST

No.	Name of Parts	Materials
1	BODY	A351 Gr. CF8M
2A	BONNET	A276 TYPE 316 or A479 TYPE 316
2B	BONNET	A276 TYPE 316 or A479 TYPE 316
3	STEM	A564 TYPE 630
4	BALL	A276 TYPE 316
7	GLAND	A276 TYPE 316 or A479 TYPE 316
		(SIZE 1/2-1 1/2)
		A351 Gr. CF8M or A276 TYPE 316
		or A479 TYPE 316 (SIZE 2 ONLY)
8	GLAND PACKING	(1)
9	HANDLE	STAINLESS STEEL (2) (SIZE 1/2-1 1/2)
		DUCTILE IRON (SIZE 2 ONLY)
10	HANDLE NUT	STAINLESS STEEL
16	NAME PLATE	STAINLESS STEEL
19A	GASKET	PTFE
19B	GASKET	FLEXIBLE GRAPHITE
19C	GASKET	(3)
29	INSERT	A182 Gr. F316 (SIZE 1/2-1 1/2)
		A351 Gr. CF8M (SIZE 2 ONLY)
30	BALL SEAT	HYPATITE PTFE
33	BONNET NUT	A194 Gr. 8M
34	GLAND NUT	STAINLESS STEEL
35	BONNET BOLT	A320 Gr. B8M
36	GLAND BOLT	A193 Gr. B8M
40A	LOCK PLATE	STAINLESS STEEL (SIZE 1/2-1 1/2)
40B	KEY LOCK PLATE	STAINLESS STEEL
43	CONED DISC SPRING	STAINLESS STEEL (SIZE 1/2-1 1/2)
48	SNAP RING	STAINLESS STEEL
49	STOPPER	STAINLESS STEEL
67	STEM BEARING	C/F PTFE (5) (UP TO SIZE 1)
		G/F PTFE (SIZE 1 1/2 & OVER)
87	PIPE	A312 TYPE 316
123	HANDLE BOLT	STAINLESS STEEL
124A	SPRING & PIN	A313 & A276 TYPE 316
124B	RING SPRING	A276 TYPE 316 (UP TO SIZE 1)
126	STOPPER PIN	STAINLESS STEEL
145	SPRING WASHER	STAINLESS STEEL
216	PRESSURE DIRECTION PLATE	STAINLESS STEEL
A	VENT HOLE SIDE PLATE	STAINLESS STEEL

NOTE

(1) Flexible graphite cored PTFE braided packing + flexible graphite packing.
(2) Plastic covering.
(3) Flexible graphite spiral wound.
(4) Please install valve so that the arrow indicated should be in the above direction.
(5) Valves have an anti-static stem bearing insuring positive conductivity between body and stem.
(6) Dimensions A and B are not in accordance with ISO 5211.

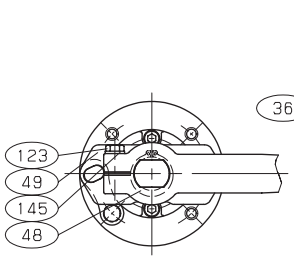

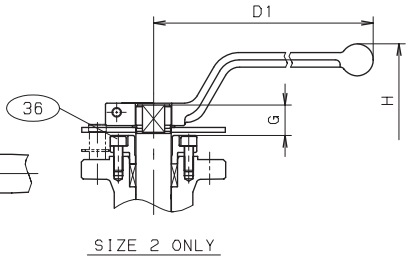

SIZE 2 ONLY

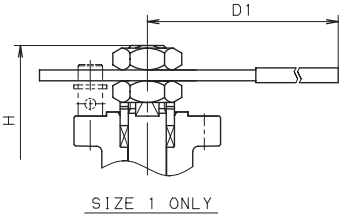

SIZE 1 ONLY

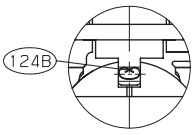

DETAIL X

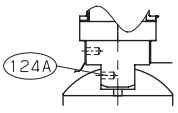

1 1/2 & OVER

DIMENSIONS

Unit : inch

Nominal Size						End Flange								Mounting Dimensions for Actuator										
							Bolt Hole																	
in.	mm	d	d1	D1	L	D	C	No.	h	Bolt Size	g	t	f	A	B	E	F	G	K	T	U	ISO 5211 Flange Type	H	H1
1/2	15	0.49	0.39	5.51	4.25	3.50	2.38	4	0.62	1/2	1.38	0.44	0.06	0.276	0.394	0.985	1.42	0.35	0.67	0.06	1/4-20UNC	F03 (6)	12.28	8.86
3/4	20	0.75	0.49	5.51	4.62	3.88	2.75	4	0.62	1/2	1.69	0.44	0.06	0.276	0.394	0.985	1.42	0.35	0.67	0.06	1/4-20UNC	F03 (6)	12.36	8.86
1	25	0.98	0.67	6.30	5.00	4.25	3.12	4	0.62	1/2	2.00	0.44	0.06	0.434	0.552	1.182	1.65	0.51	1.02	0.06	1/4-20UNC	F04	10.55	8.80
1 1/2	40	1.50	1.18	7.09	6.50	5.00	3.88	4	0.62	1/2	2.88	0.56	0.06	0.552	0.709	1.378	1.97	0.55	1.26	0.08	1/4-20UNC	F05	15.94	10.98
2	50	2.00	1.50	9.06	7.00	6.00	4.75	4	0.75	5/8	3.62	0.62	0.06	0.670	0.867	2.166	2.76	0.67	1.34	0.08	5/16-18UNC	F07	16.57	11.42

150UTALM



MATERIAL LIST

No.	Name of Parts	Materials
1	BODY	A351 Gr. CF8M
2A	BONNET	A276 TYPE 316 or A479 TYPE 316
2B	BONNET	A276 TYPE 316 or A479 TYPE 316
3	STEM	A564 TYPE 630
4	BALL	A351 Gr. CF8M
7	GLAND	A351 Gr. CF8M or A276 TYPE 316
		or A479 TYPE 316
8	GLAND PACKING	(1)
9	HANDLE	DUCTILE IRON
16	NAME PLATE	STAINLESS STEEL
19A	GASKET	PTFE
19B	GASKET	FLEXIBLE GRAPHITE
19C	GASKET	(2)
29	INSERT	A351 Gr. CF8M
30A	BALL SEAT	HYPATITE PTFE
30B	BALL SEAT	HYPATITE PTFE
33	BONNET NUT	A194 Gr. 8M
35	BONNET BOLT	A320 Gr. B8M
36	GLAND BOLT	A193 Gr. B8M
40	KEY LOCK PLATE	STAINLESS STEEL
48	SNAP RING	STAINLESS STEEL
49	STOPPER	STAINLESS STEEL
67	STEM BEARING	G/F PTFE
87	PIPE	A312 TYPE 316
123	HANDLE BOLT	STAINLESS STEEL
124	SPRING & PIN	STAINLESS STEEL
126	STOPPER PIN	STAINLESS STEEL
143	SEAT SPRING	UNS NO7750
145	SPRING WASHER	STAINLESS STEEL
216	PRESSURE DIRECTION PLATE	STAINLESS STEEL

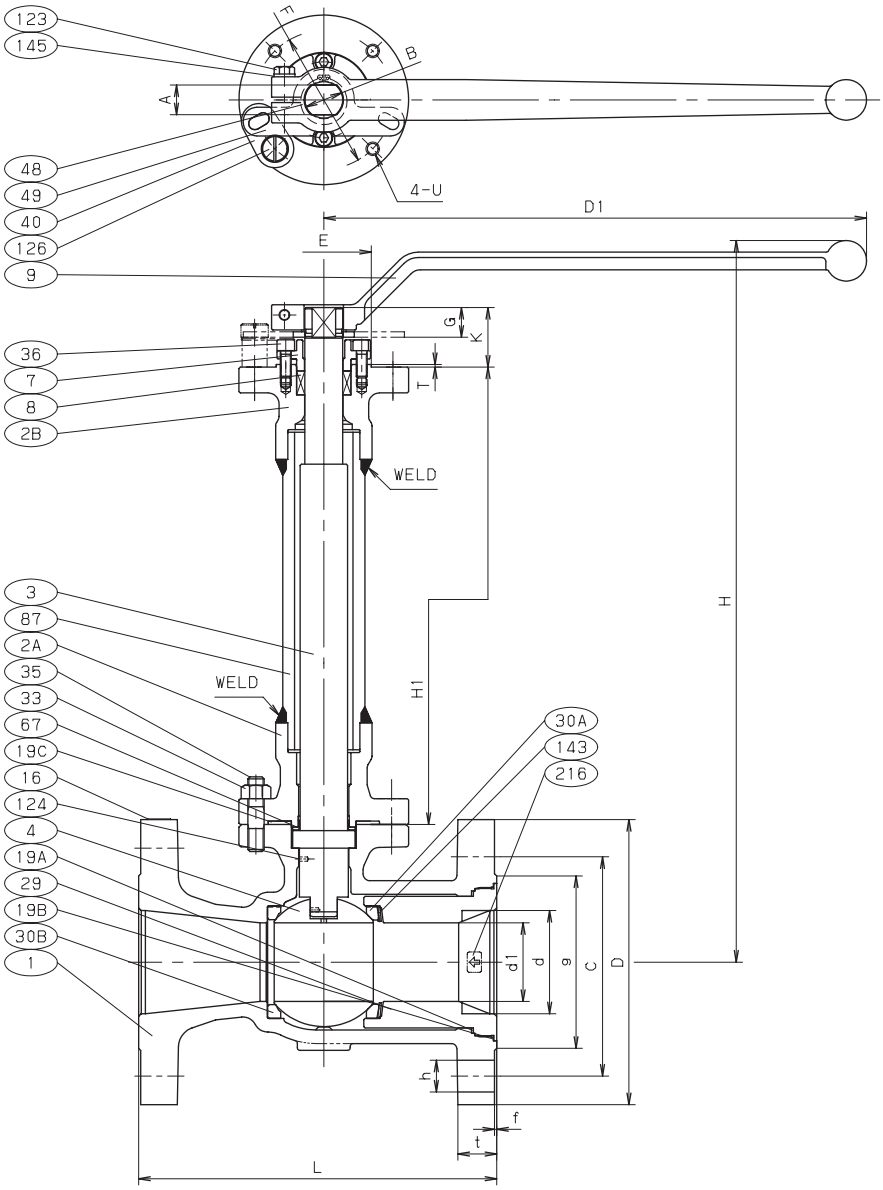

NOTE

(1) Flexible graphite cored PTFE braided packing + flexible graphite packing.
(2) Flexible graphite spiral wound.
(3) Please install valve so that the arrow indicated should be in the above direction.

DIMENSIONS

Unit : inch

Nominal Size						End Flange								Mounting Dimensions for Actuator										
							Bolt Hole																	
in.	mm	d	d1	D1	L	D	C	No.	h	Bolt Size	g	t	f	A	B	E	F	G	K	T	U	ISO 5211 Flange Type	H	H1
3	80	3.00	2.28	15.75	8.00	7.50	6.00	4	0.75	5/8	5.00	0.75	0.06	0.867	1.103	2.756	4.02	0.87	1.73	0.08	3/8-16UNC	F10	20.94	13.27
4	100	4.00	3.00	15.75	9.00	9.00	7.50	8	0.75	5/8	6.19	0.94	0.06	0.867	1.103	2.756	4.02	0.87	1.73	0.08	3/8-16UNC	F10	21.57	13.27

G-150UTALM



MATERIAL LIST

No.	Name of Parts	Materials
1	BODY	A351 Gr. CF8M
2A	BONNET	A276 TYPE 316 or A479 TYPE 316
2B	BONNET	A276 TYPE 316 or A479 TYPE 316
3	STEM	A564 TYPE 630
4	BALL	A351 Gr. CF8M
7	GLAND	A351 Gr. CF8M or A276 TYPE 316
		or A479 TYPE 316
8	GLAND PACKING	(1)
16	NAME PLATE	STAINLESS STEEL
19A	GASKET	PTFE
19B	GASKET	FLEXIBLE GRAPHITE
19C	GASKET	(2)
29	INSERT	A351 Gr. CF8M
30A	BALL SEAT	HYPATITE PTFE
30B	BALL SEAT	HYPATITE PTFE
33	BONNET NUT	A194 Gr. 8M
35	BONNET BOLT	A320 Gr. B8M
36	GLAND BOLT	A193 Gr. B8M
67	STEM BEARING	G/F PTFE
87	PIPE	A312 TYPE 316
92	CONNECTOR	CARBON STEEL
93	BRACKET	CARBON STEEL
99	BOLT	CARBON STEEL
102	GEAR UNIT	
124	SPRING & PIN	A313 or A276 TYPE 316
138	BOLT	CARBON STEEL
143	SEAT SPRING	UNS NO7750
216	PRESSURE DIRECTION PLATE	STAINLESS STEEL

NOTE

(1) Flexible graphite cored PTFE braided packing + flexible graphite packing.
(2) Flexible graphite spiral wound.
(3) Please install valve so that the arrow indicated should be in the above direction.

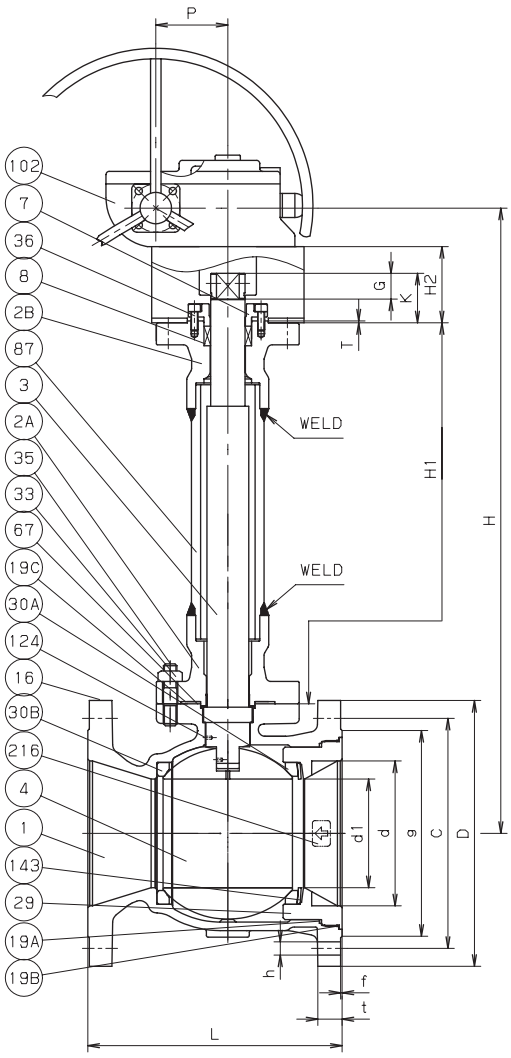

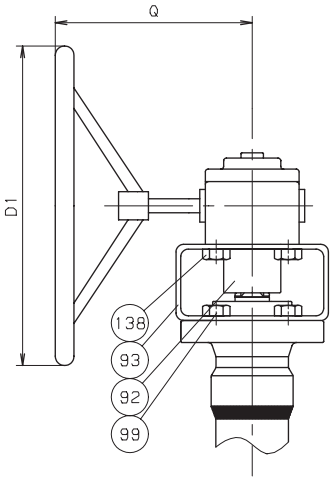

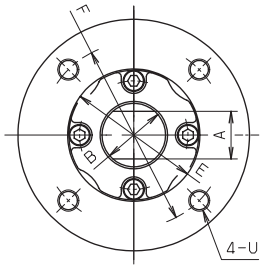

ACTUATOR MOUNTING

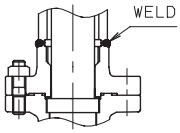

SIZE 8, 10

Unit : inch

Nominal Size						
in.	mm	H	H1	H2	L	D1
6	150	25.91	15.75	3.15	15.50	15.75
8	200	28.05	15.94	3.94	18.00	15.75
10	250	32.93	18.11	4.72	21.00	19.69

DIMENSIONS

Nominal Size				End Flange										Mounting Dimensions for Actuator								
					Bolt Hole																	
in.	mm	d	d1	D	C	No.	h	Bolt Size	g	t	f	P	Q	A	B	E	F	G	K	T	U	ISO 5211 Flange Type
6	150	6.00	4.49	11.00	9.50	8	0.88	3/4	8.50	1.00	0.06	3.39	13.39	1.063	1.418	3.347	4.92	1.06	2.05	0.08	1/2-13UNC	F12
8	200	8.00	5.67	13.50	11.75	8	0.88	3/4	10.62	1.12	0.06	3.39	13.39	1.418	1.890	3.937	5.51	1.42	2.54	0.08	5/8-11UNC	F14
10	250	10.00	7.36	16.00	14.25	12	1.00	7/8	12.75	1.19	0.06	5.12	14.37	1.811	2.363	5.119	6.50	1.81	3.07	0.08	3/4-10UNC	F16

300UTALM



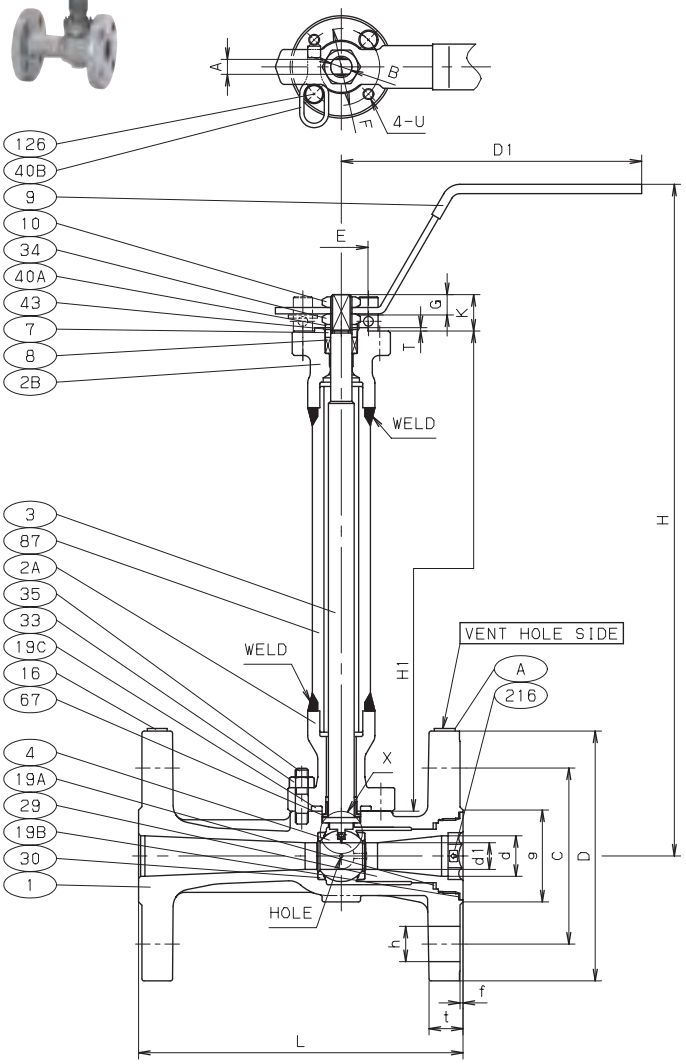

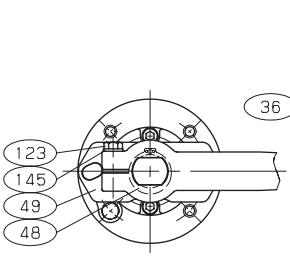

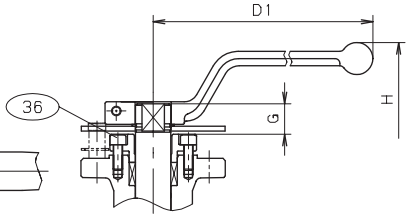

SIZE 2 ONLY

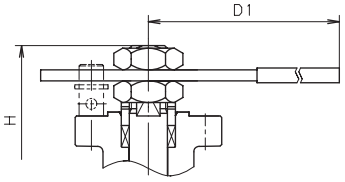

SIZE 1 ONLY

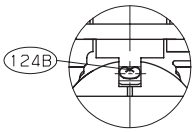

DETAIL X

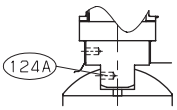

1 ½ & OVER

MATERIAL LIST

No.	Name of Parts	Materials
1	BODY	A351 Gr. CF8M
2A	BONNET	A276 TYPE 316 or A479 TYPE 316
2B	BONNET	A276 TYPE 316 or A479 TYPE 316
3	STEM	A564 TYPE 630
4	BALL	A276 TYPE 316 or A479 TYPE 316
7	GLAND	A276 TYPE 316 or A479 TYPE 316
		(SIZE 1/2-1 1/2)
		A351 Gr. CF8M (SIZE 2 ONLY)
8	GLAND PACKING	(1)
9	HANDLE	STAINLESS STEEL (2) (SIZE 1/2-1 1/2)
		DUCTILE IRON (SIZE 2 ONLY)
10	HANDLE NUT	STAINLESS STEEL
16	NAME PLATE	STAINLESS STEEL
19A	GASKET	PTFE
19B	GASKET	FLEXIBLE GRAPHITE
19C	GASKET	(3)
29	INSERT	A351 Gr. CF8M
30	BALL SEAT	HYPATITE PTFE
33	BONNET NUT	A194 Gr. 8M
34	GLAND NUT	STAINLESS STEEL
35	BONNET BOLT	A320 Gr. B8M
36	GLAND BOLT	A193 Gr. B8M
40A	LOCK PLATE	STAINLESS STEEL (SIZE 1/2-1 1/2)
40B	KEY LOCK PLATE	STAINLESS STEEL
43	CONED DISC SPRING	STAINLESS STEEL (SIZE 1/2-1 1/2)
48	SNAP RING	STAINLESS STEEL
49	STOPPER	STAINLESS STEEL
67	STEM BEARING	C/F PTFE (5) (UP TO SIZE 1)
		G/F PTFE (SIZE 1 1/2 & OVER)
87	PIPE	A312 TYPE 316L
123	HANDLE BOLT	STAINLESS STEEL
124A	SPRING & PIN	A313 & A276 TYPE 316
124B	RING SPRING	A276 TYPE 316 (UP TO SIZE 1)
126	STOPPER PIN	STAINLESS STEEL
145	SPRING WASHER	STAINLESS STEEL
216	PRESSURE DIRECTION PLATE	STAINLESS STEEL
A	VENT HOLE SIDE PLATE	STAINLESS STEEL

NOTE

(1) Flexible graphite cored PTFE braided packing + flexible graphite packing.
(2) Plastic covering.
(3) Flexible graphite spiral wound.
(4) Please install valve so that the arrow indicated should be in the above direction.
(5) Valves have an anti-static stem bearing insuring positive conductivity between body and stem.

DIMENSIONS

Unit : inch

Nominal Size						End Flange								Mounting Dimensions for Actuator										
							Bolt Hole																	
in.	mm	d	d1	D1	L	D	C	No.	h	Bolt Size	g	t	f	A	B	E	F	G	K	T	U	ISO 5211 Flange Type	H	H1
1/2	15	0.49	0.39	5.51	5.50	3.75	2.62	4	0.62	1/2	1.38	0.56	0.06	0.276	0.394	0.985	1.42	0.35	0.67	0.06	1/4-20UNC	F03	12.28	8.86
3/4	20	0.75	0.49	5.51	6.00	4.62	3.25	4	0.75	5/8	1.69	0.62	0.06	0.276	0.394	0.985	1.42	0.35	0.67	0.06	1/4-20UNC	F03	12.36	8.86
1	25	0.98	0.67	6.30	6.50	4.88	3.50	4	0.75	5/8	2.00	0.69	0.06	0.434	0.552	1.182	1.65	0.51	1.02	0.06	1/4-20UNC	F04	10.55	8.80
1 1/2	40	1.50	1.18	7.09	7.50	6.12	4.50	4	0.88	3/4	2.88	0.81	0.06	0.552	0.709	1.378	1.97	0.55	1.26	0.08	1/4-20UNC	F05	15.94	10.98
2	50	2.00	1.50	9.06	8.50	6.50	5.00	8	0.75	5/8	3.62	0.88	0.06	0.670	0.867	2.166	2.76	0.67	1.34	0.08	5/16-18UNC	F07	16.57	11.42

300UTALM



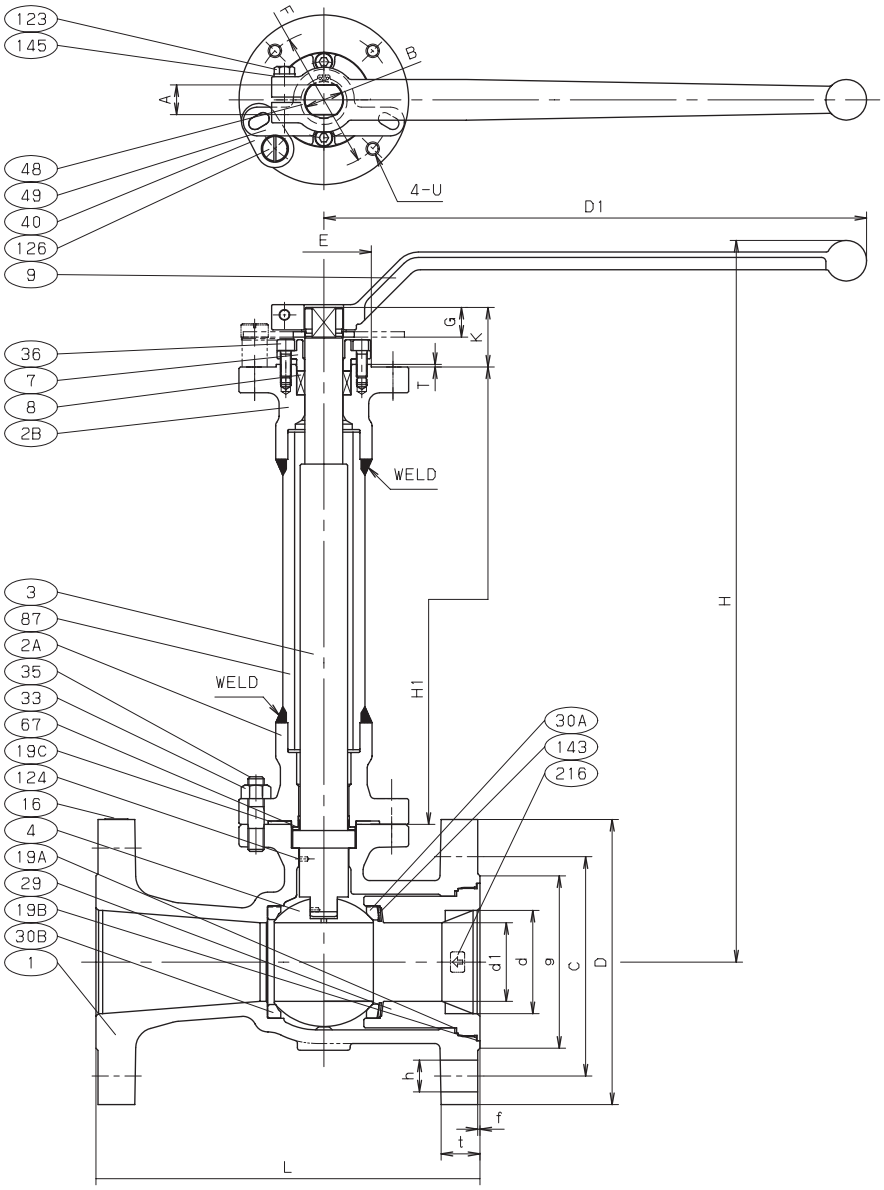

MATERIAL LIST

No.	Name of Parts	Materials
1	BODY	A351 Gr. CF8M
2A	BONNET	A276 TYPE 316 or A479 TYPE 316
2B	BONNET	A276 TYPE 316 or A479 TYPE 316
3	STEM	A564 TYPE 630
4	BALL	A351 Gr. CF8M
7	GLAND	A351 Gr. CF8M
8	GLAND PACKING	(1)
9	HANDLE	DUCTILE IRON
16	NAME PLATE	STAINLESS STEEL
19A	GASKET	PTFE
19B	GASKET	FLEXIBLE GRAPHITE
19C	GASKET	(3)
29	INSERT	A182 Gr. F316
30A	BALL SEAT	HYPATITE PTFE
30B	BALL SEAT	HYPATITE PTFE
33	BONNET NUT	A194 Gr. 8M
35	BONNET BOLT	A320 Gr. B8M
36	GLAND BOLT	A193 Gr. B8M
40	KEY LOCK PLATE	STAINLESS STEEL
48	SNAP RING	STAINLESS STEEL
49	STOPPER	STAINLESS STEEL
67	STEM BEARING	G/F PTFE
87	PIPE	A312 TYPE 316L
123	HANDLE BOLT	STAINLESS STEEL
124	SPRING & PIN	STAINLESS STEEL
126	STOPPER PIN	STAINLESS STEEL
143	SEAT SPRING	UNS NO7750
145	SPRING WASHER	STAINLESS STEEL
216	PRESSURE DIRECTION PLATE	STAINLESS STEEL

NOTE

(1) Flexible graphite cored PTFE braided packing + flexible graphite packing.

(2) Flexible graphite spiral wound.

(3) Please install valve so that the arrow indicated should be in the above direction.

DIMENSIONS

Unit : inch

Nominal Size						End Flange								Mounting Dimensions for Actuator										
							Bolt Hole																	
in.	mm	d	d1	D1	L	D	C	No.	h	Bolt Size	g	t	f	A	B	E	F	G	K	T	U	ISO 5211 Flange Type	H	H1
3	80	3.00	2.28	15.75	11.12	8.25	6.62	8	0.88	3/4	5.00	1.12	0.06	0.867	1.103	2.756	4.02	0.87	1.73	0.08	3/8-16UNC	F10	20.94	13.27
4	100	4.00	3.00	15.75	12.00	10.00	7.88	8	0.88	3/4	6.19	1.25	0.06	0.867	1.103	2.756	4.02	0.87	1.73	0.08	3/8-16UNC	F10	21.57	13.27

G-300UTALM



MATERIAL LIST

No.	Name of Parts	Materials
1	BODY	A351 Gr. CF8M
2 A	BONNET	A276 TYPE 316 or A479 TYPE 316
2 B	BONNET	A276 TYPE 316 or A479 TYPE 316
3	STEM	A564 TYPE 630
4	BALL	A351 Gr. CF8M
7	GLAND	A351 Gr. CF8M
8	GLAND PACKING	(1)
16	NAME PLATE	STAINLESS STEEL
19 A	GASKET	PTFE
19 B	GASKET	FLEXIBLE GRAPHITE
19 C	GASKET	(2)
29	INSERT	A351 Gr. CF8M
30 A	BALL SEAT	HYPATITE PTFE
30 B	BALL SEAT	HYPATITE PTFE
33	BONNET NUT	A194 Gr. 8M
35	BONNET BOLT	A320 Gr. B8M
36	GLAND BOLT	A193 Gr. B8M
67	STEM BEARING	G/F PTFE
87	PIPE	A312 TYPE 316L
92	CONNECTOR	STAINLESS STEEL
93	BRACKET	CARBON STEEL
99	BOLT	CARBON STEEL
102	GEAR UNIT	
124	SPRING & PIN	A313 or A276 TYPE 316
138	BOLT	CARBON STEEL
143	SEAT SPRING	UNS NO7750
216	PRESSURE DIRECTION PLATE	STAINLESS STEEL

NOTE

(1) Flexible graphite cored PTFE braided packing + flexible graphite packing.
(2) Flexible graphite spiral wound.
(3) Please install valve so that the arrow indicated should be in the above direction.

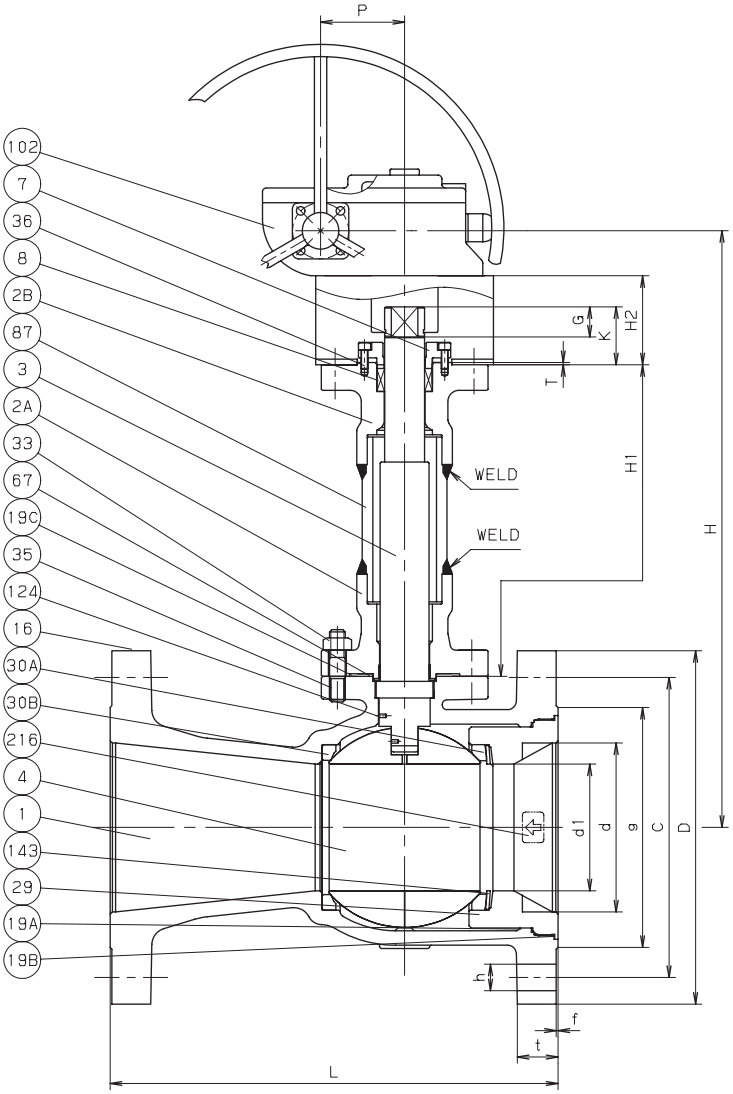

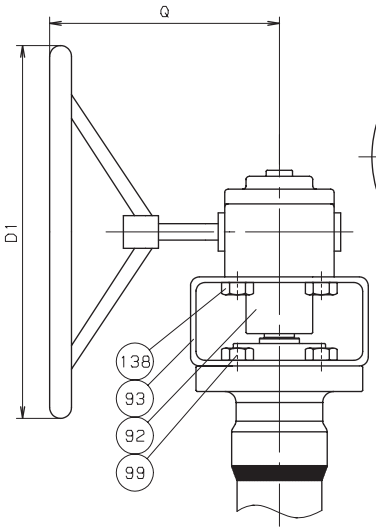

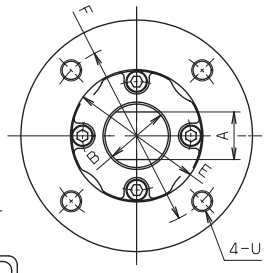

ACTUATOR MOUNTING

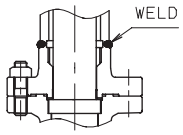

SIZE 8, 10

Unit : inch

Nominal Size						
in.	mm	H	H1	H2	L	D1
6	150	28.00	15.75	4.72	15.88	19.69
8	200	29.35	15.94	4.72	16.50	19.69
10	250	32.93	18.11	4.72	18.00	19.69

DIMENSIONS

Nominal Size				End Flange								P	Q	Mounting Dimensions for Actuator							
					Bolt Hole																ISO 5211
in.	mm	d	d1	D	C	No.	h	Bolt Size	g	t	f			A	B	E	F	G	K	T	U	Flange Type
6	150	6.00	4.49	12.50	10.62	12	0.88	3/4	8.50	1.44	0.06	5.12	14.37	1.063	1.418	3.347	4.92	1.06	2.05	0.08	1/2-13UNC	F12
8	200	8.00	5.67	15.00	13.00	12	1.00	7/8	10.62	1.62	0.06	5.12	14.37	1.418	1.890	3.937	5.51	1.42	2.54	0.08	5/8-11UNC	F14
10	250	10.00	7.36	17.50	15.25	16	1.12	1	12.75	1.88	0.06	8.31	16.73	1.811	2.363	5.119	6.50	1.81	3.07	0.08	3/4-10UNC	F16

AKSCTKZM-FS
CODE NO. 119

MATERIAL LIST

No.	Name of Parts	Materials
1	BODY	A216 Gr. WCB
3	STEM	A276 TYPE 316
4	BALL	A276 TYPE 316
7	GLAND	A276 TYPE 304
8	GLAND PACKING	FLEXIBLE GRAPHITE
9	HANDLE	CARBON STEEL (1)
10	NUT	A194 Gr. 8
16	WASHER	A276 TYPE 304 (SIZE 1/4, 3/8, 1 & OVER)
29	INSERT	A276 TYPE 316 or A351 Gr. CF8MB
30	BALL SEAT	HYPATITE PTFE
34	NUT	A194 Gr. 8 (SIZE 1/2 & OVER)
47	THRUST WASHER	C/F PTFE
A	LATCH LOCK	A276 TYPE 430 (SIZE 1/2 & OVER)

NOTE

(1) Plastic covering.

(2) Valve rating 2000WOG (Size 1/4 to 1), 1500WOG (Size 1 1/4 to 2)

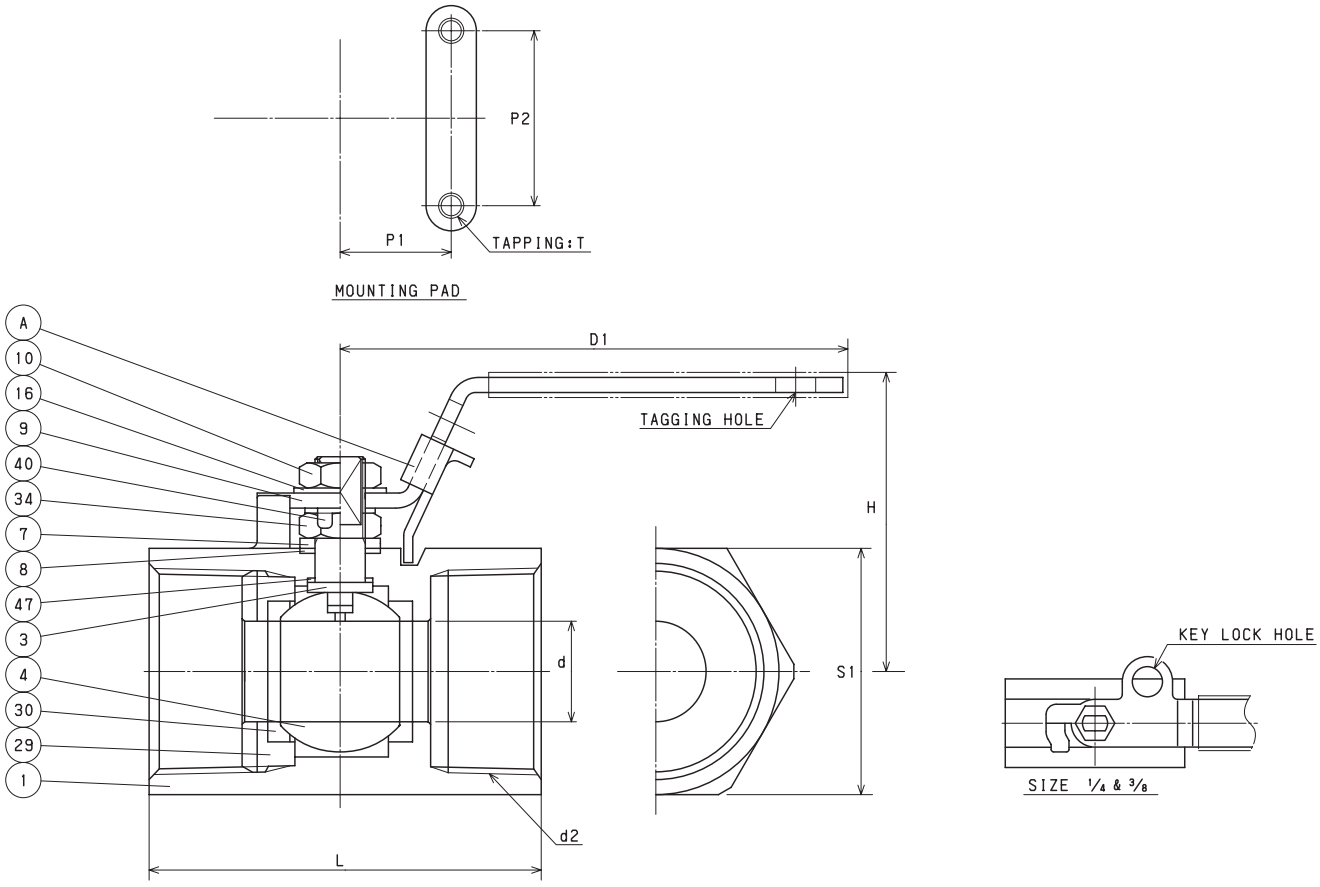

DIMENSIONS

Unit : inch

Nominal Size	d	H	D1	L	d2	S1	P1	P2	T
1/4	0.18	1.12	2.80	1.97	NPT 1/4	0.72	• •	• •	• •
3/8	0.27	1.16	3.23	2.05	NPT 3/8	0.87	• •	• •	• •
1/2	0.36	1.93	3.54	2.56	NPT 1/2	1.10	0.5	1.12	No.10-24UNC
3/4	0.49	2.05	3.54	2.76	NPT 3/4	1.34	0.57	1.37	No.10-24UNC
1	0.63	2.15	4.33	3.15	NPT 1	1.57	0.87	1.37	No.10-24UNC
1 1/4	0.79	2.34	4.33	3.74	NPT 1 1/4	1.97	1	1.5	1/4-20UNC
1 1/2	0.96	2.68	5.51	3.94	NPT 1 1/2	2.24	1	1.5	1/4-20UNC
2	1.26	2.89	5.51	4.49	NPT 2	2.72	1	1.5	1/4-20UNC

AKSCTKZM-FSO
CODE NO. 119-LOH

MATERIAL LIST

No.	Name of Parts	Materials
1	BODY	A216 Gr. WCB
3	STEM	A276 TYPE 316
4	BALL	A276 TYPE 316
7	GLAND	A276 TYPE 304
8	GLAND PACKING	FLEXIBLE GRAPHITE
9	HANDLE	CARBON STEEL (1)
10	NUT	A194 Gr. 8
16	WASHER	A276 TYPE 304 (SIZE 1/4, 3/8, 1 & OVER)
29	INSERT	A276 TYPE 316 or A351 Gr. CF8M
30	BALL SEAT	HYPATITE PTFE
34	NUT	A194 Gr. 8 (SIZE 1/2 & OVER)
47	THRUST WASHER	C/F PTFE
A	LATCH LOCK	A276 TYPE 430 (SIZE 1/2 & OVER)

NOTE

(1) Plastic covering.

(2) Valve rating 2000WOG (size 1/4 to 1), 1500WOG (size 1 1/4 to 2)

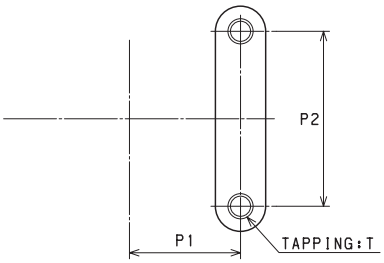

MOUNTING PAD

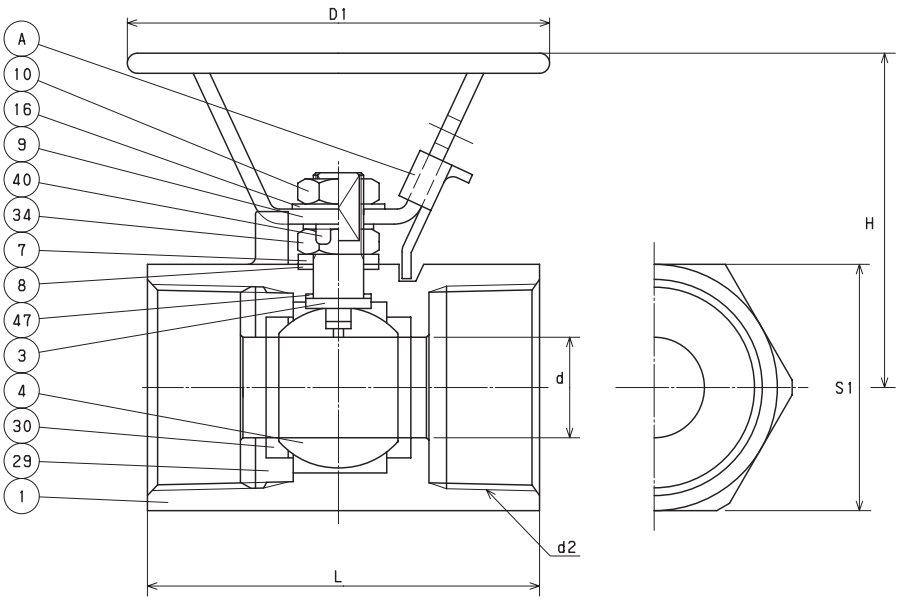

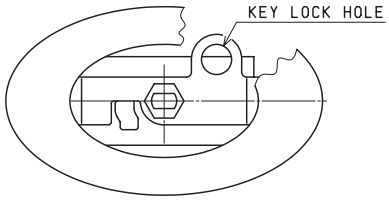

SIZE 1/4 & 3/8

DIMENSIONS

Unit : inch

Nominal Size	d	H	D1	L	d2	S1	P1	P2	T
1/4	0.18	1.71	3.94	1.97	NPT 1/4	0.72	• •	• •	• •
3/8	0.27	1.87	3.94	2.05	NPT 3/8	0.87	• •	• •	• •
1/2	1.36	2.13	3.94	2.56	NPT 1/2	1.10	0.5	1.12	No.10-24UNC
3/4	0.49	2.24	3.94	2.76	NPT 3/4	1.34	0.57	1.37	No.10-24UNC
1	0.63	2.38	3.94	3.15	NPT 1	1.57	0.87	1.37	No.10-24UNC
1 1/4	0.79	2.58	3.94	3.74	NPT 1 1/4	1.97	1	1.5	1/4-20UNC
1 1/2	0.96	3.07	5.12	3.94	NPT 1 1/2	2.24	1	1.5	1/4-20UNC
2	1.26	3.29	5.12	4.49	NPT 2	2.72	1	1.5	1/4-20UNC

AKSCTHZM
CODE NO. 217

MATERIAL LIST

No.	Name of Parts	Materials
1	BODY	A216 Gr. WCB
2	BODY CAP	A216 Gr. WCB
3	STEM	A276 TYPE 316
4	BALL	A276 TYPE 316
7	GLAND	A276 TYPE 304
8	GLAND PACKING	PTFE
9	HANDLE	CARBON STEEL (1)
10	HANDLE NUT	A194 Gr. 8
16	WASHER	A276 TYPE 304
19	GASKET	PTFE
30	BALL SEAT	HYPATITE PTFE
47	THRUST WASHER	G/F PTFE
A	LATCH LOCK	CARBON STEEL

NOTE

(1) Plastic covering.
(2) BS 5351 Class 800 (size 1/4 to 1), KITZ standard (size 1 1/4 to 2).
(3) Valve rating 2000WOG (size 1/4 to 1), 1500WOG (size 1 1/4 to 2).

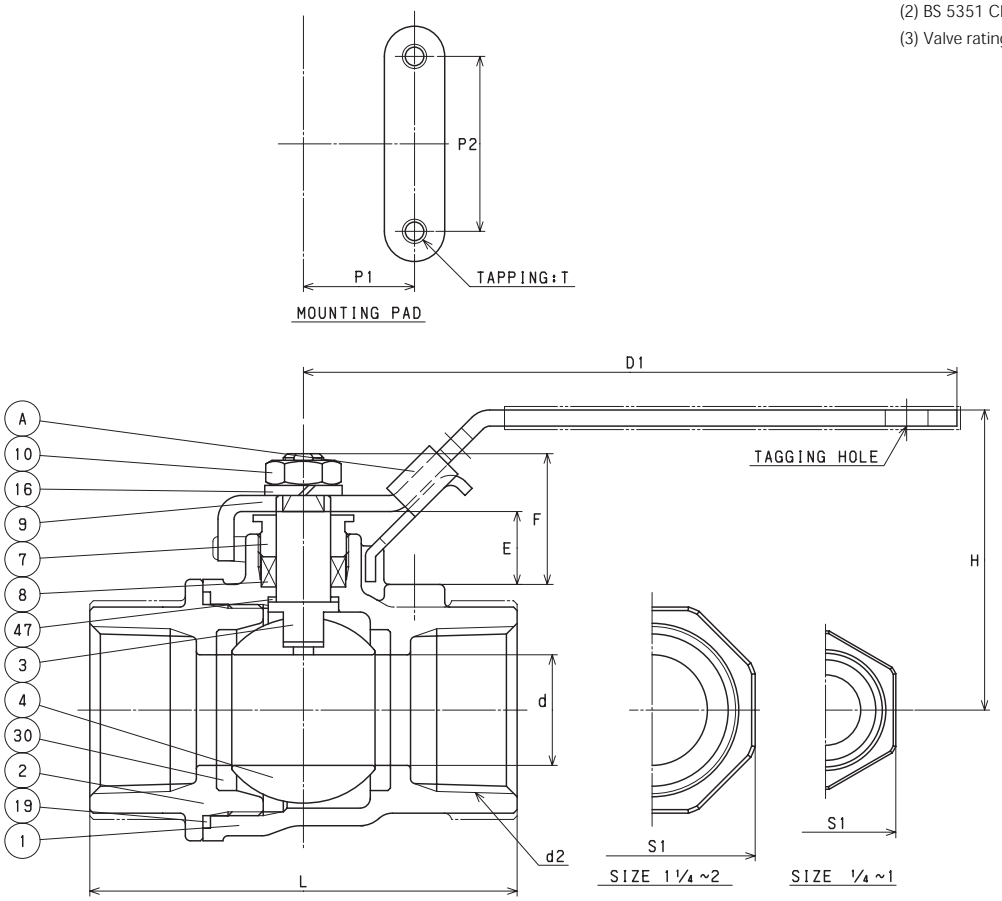

DIMENSIONS

Unit : inch

Nominal Size	d	H	D1	L	d2	S1	P1	P2	E	F	T
1/4	0.37	1.99	3.94	2.09	NPT 1/4	0.827	0.5	1.12	0.571	0.925	No.10-24UNC
3/8	0.37	1.99	3.94	2.09	NPT 3/8	0.945	0.5	1.12	0.571	0.925	No.10-24UNC
1/2	0.39	2.29	4.53	2.44	NPT 1/2	1.102	0.5	1.12	0.531	0.925	No.10-24UNC
3/4	0.59	2.47	4.53	2.83	NPT 3/4	1.378	0.87	1.37	0.551	1.004	No.10-24UNC
1	0.79	2.50	5.31	3.35	NPT 1	1.614	0.87	1.37	0.571	1.063	No.10-24UNC
1 1/4	0.98	2.66	5.31	3.70	NPT 1 1/4	2.047	0.93	1.5	0.531	1.024	1/4-20UNC
1 1/2	1.26	3.27	6.10	4.21	NPT 1 1/2	2.323	0.93	1.5	0.669	1.240	1/4-20UNC
2	1.57	3.58	7.48	4.72	NPT 2	2.835	0.93	1.5	0.591	1.240	1/4-20UNC

AKSCTHZM-O
CODE NO. 217-LOH

MATERIAL LIST

No.	Name of Parts	Materials
1	BODY	A216 Gr. WCB
2	BODY CAP	A216 Gr. WCB
3	STEM	A276 TYPE 316
4	BALL	A276 TYPE 316
7	GLAND	A276 TYPE 304
8	GLAND PACKING	PTFE
9	HANDLE	CARBON STEEL (1)
10	HANDLE NUT	A194 Gr. 8
16	WASHER	A276 TYPE 304
19	GASKET	PTFE
30	BALL SEAT	HYPATITE PTFE
47	THRUST WASHER	G/F PTFE
A	LATCH LOCK	CARBON STEEL

NOTE

(1) Plastic covering.
(2) BS 5351 Class 800 (size 1/4 to 1), KITZ standard (size 1 1/4 to 2).
(3) Valve rating 2000WOG (size 1/4 to 1), 1500WOG (size 1 1/4 to 2).

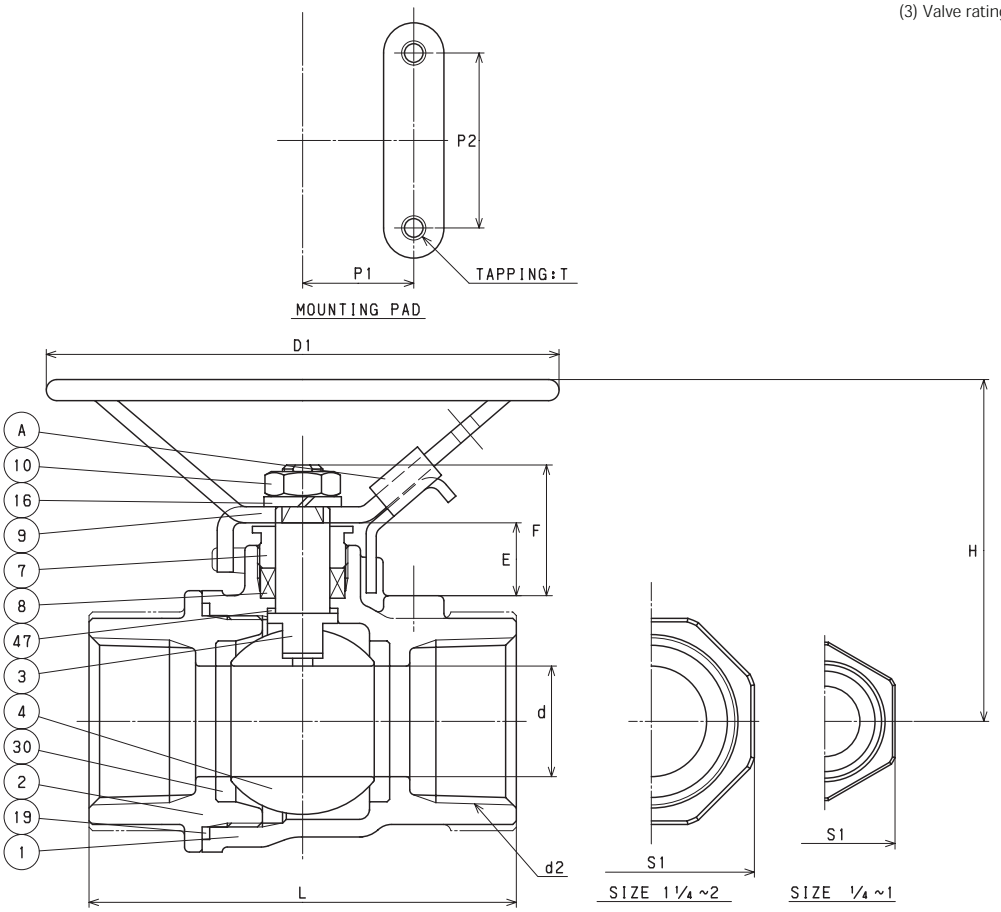

DIMENSIONS

Unit : inch

Nominal Size	d	H	D1	L	d2	S1	P1	P2	E	F	T
1/4	0.37	2.42	3.94	2.09	NPT 1/4	0.827	0.5	1.12	0.571	0.925	No.10-24UNC
3/8	0.37	2.42	3.94	2.09	NPT 3/8	0.945	0.5	1.12	0.571	0.925	No.10-24UNC
1/2	0.39	2.46	3.94	2.44	NPT 1/2	1.102	0.5	1.12	0.531	0.925	No.10-24UNC
3/4	0.59	2.64	3.94	2.83	NPT 3/4	1.378	0.87	1.37	0.551	1.004	No.10-24UNC
1	0.79	2.70	3.94	3.35	NPT 1	1.614	0.87	1.37	0.571	1.063	No.10-24UNC
1 1/4	0.98	2.85	3.94	3.70	NPT 1 1/4	2.047	0.93	1.5	0.531	1.024	1/4-20UNC
1 1/2	1.26	3.66	5.12	4.21	NPT 1 1/2	2.323	0.93	1.5	0.669	1.240	1/4-20UNC
2	1.57	3.98	7.09	4.72	NPT 2	2.835	0.93	1.5	0.591	1.240	1/4-20UNC

AKSCTHZM-FS
CODE NO. 219

MATERIAL LIST

No.	Name of Parts	Materials
1	BODY	A216 Gr. WCB
2	BODY CAP	A216 Gr. WCB
3	STEM	A276 TYPE 316
4	BALL	A276 TYPE 316
7	GLAND	A276 TYPE 304
8	GLAND PACKING	FLEXIBLE GRAPHITE
9	HANDLE	CARBON STEEL (1)
10	HANDLE NUT	A194 Gr. 8
16	WASHER	A276 TYPE 304
19	GASKET	FLEXIBLE GRAPHITE
30	BALL SEAT	HYPATITE PTFE
47	THRUST WASHER	G/F PTFE
A	LATCH LOCK	CARBON STEEL

NOTE

(1) Plastic covering.
(2) BS 5351 Class 800 (size 1/4 to 1), KITZ standard (size 1 1/4 to 2).
(3) Valve rating 2000WOG (size 1/4 to 1), 1500WOG (size 1 1/4 to 2).

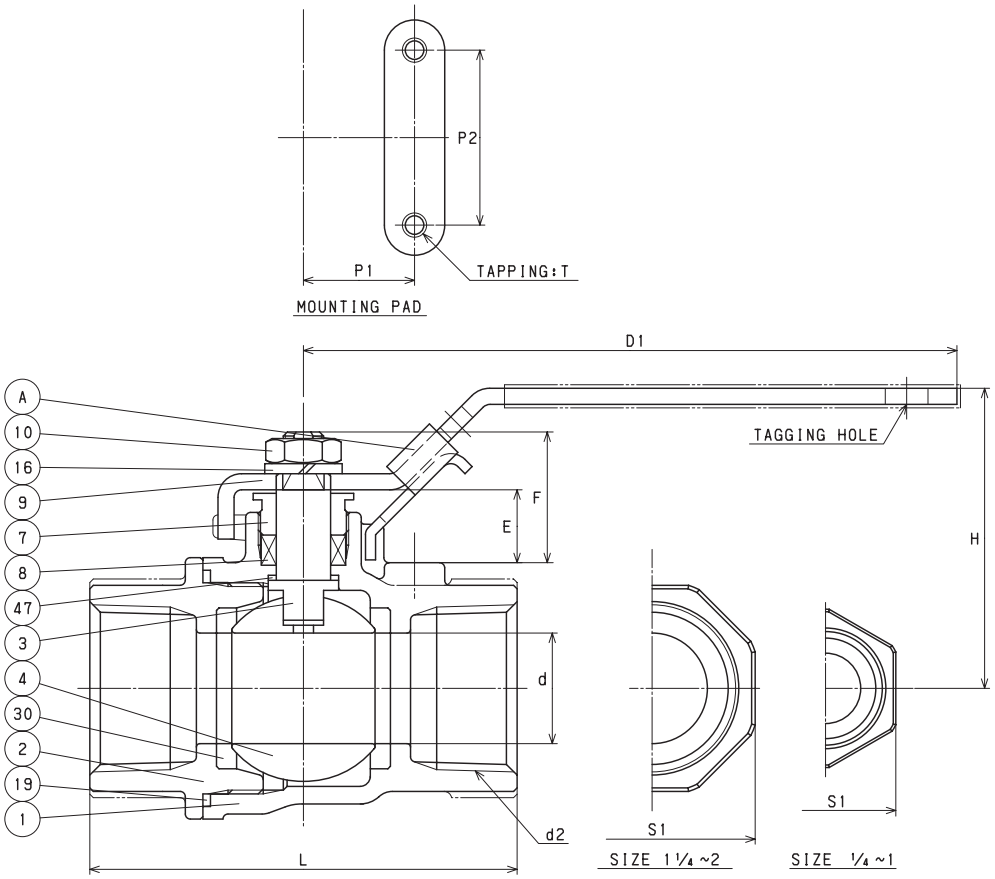

DIMENSIONS

Unit : inch

Nominal Size	d	H	D1	L	d2	S1	P1	P2	E	F	T
1/4	0.37	1.99	3.94	2.09	NPT 1/4	0.827	0.5	1.12	0.571	0.925	No.10-24UNC
3/8	0.37	1.99	3.94	2.09	NPT 3/8	0.945	0.5	1.12	0.571	0.925	No.10-24UNC
1/2	0.39	2.29	4.53	2.44	NPT 1/2	1.102	0.5	1.12	0.531	0.925	No.10-24UNC
3/4	0.59	2.47	4.53	2.83	NPT 3/4	1.378	0.87	1.37	0.551	1.004	No.10-24UNC
1	0.79	2.50	5.31	3.35	NPT 1	1.614	0.87	1.37	0.571	1.063	No.10-24UNC
1 1/4	0.98	2.66	5.31	3.70	NPT 1 1/4	2.047	0.93	1.5	0.531	1.024	1/4-20UNC
1 1/2	1.26	3.27	6.10	4.21	NPT 1 1/2	2.323	0.93	1.5	0.669	1.240	1/4-20UNC
2	1.57	3.58	7.48	4.72	NPT 2	2.835	0.93	1.5	0.591	1.240	1/4-20UNC

AKSCTHZM-FSO
CODE NO. 219-LOH

MATERIAL LIST

No.	Name of Parts	Materials
1	BODY	A216 Gr. WCB
2	BODY CAP	A216 Gr. WCB
3	STEM	A276 TYPE 316
4	BALL	A276 TYPE 316
7	GLAND	A276 TYPE 304
8	GLAND PACKING	FLEXIBLE GRAPHITE
9	HANDLE	CARBON STEEL (1)
10	HANDLE NUT	A194 Gr. 8
16	WASHER	A276 TYPE 304
19	GASKET	FLEXIBLE GRAPHITE
30	BALL SEAT	HYPATITE PTFE
47	THRUST WASHER	G/F PTFE
A	LATCH LOCK	CARBON STEEL

NOTE

(1) Plastic covering.
(2) BS 5351 Class 800 (size 1/4 to 1), KITZ standard (size 1 1/4 to 2).
(3) Valve rating 2000WOG (size 1/4 to 1), 1500WOG (size 1 1/4 to 2).

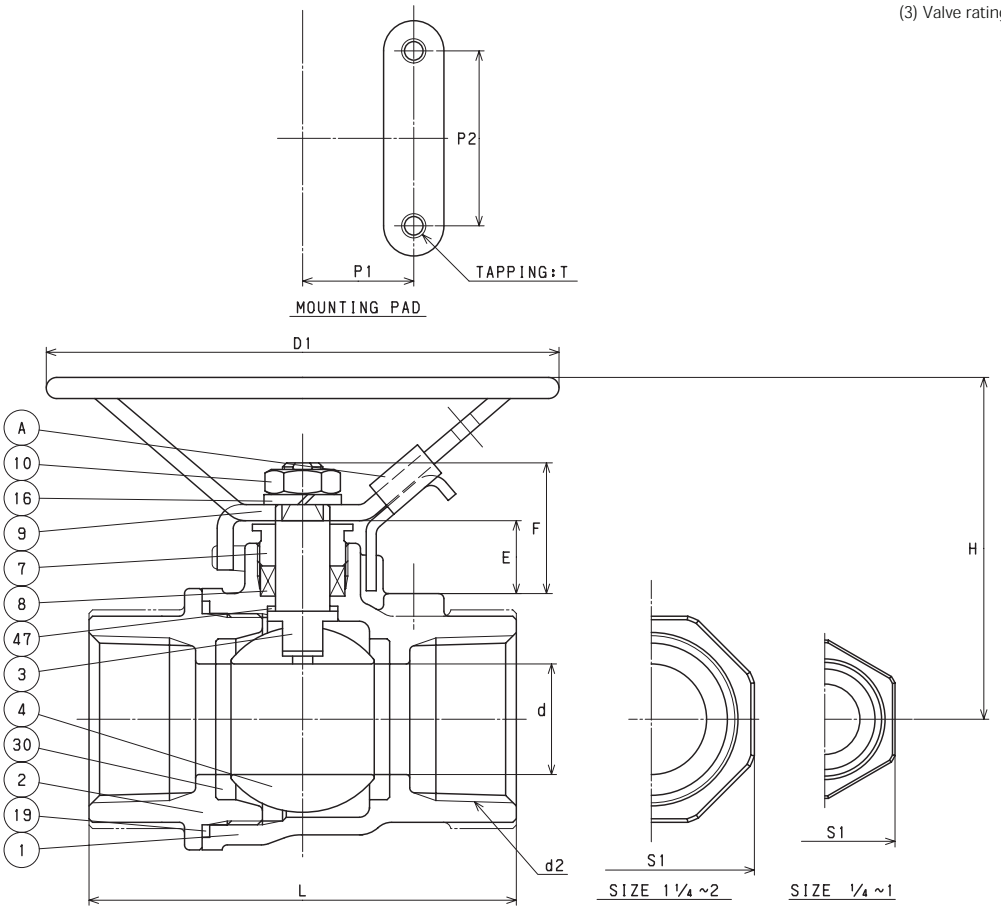

DIMENSIONS

Unit : inch

Nominal Size	d	H	D1	L	d2	S1	P1	P2	E	F	T
1/4	0.37	2.42	3.94	2.09	NPT 1/4	0.827	0.5	1.12	0.571	0.925	No.10-24UNC
3/8	0.37	2.42	3.94	2.09	NPT 3/8	0.945	0.5	1.12	0.571	0.925	No.10-24UNC
1/2	0.39	2.46	3.94	2.44	NPT 1/2	1.102	0.5	1.12	0.531	0.925	No.10-24UNC
3/4	0.59	2.64	3.94	2.83	NPT 3/4	1.378	0.87	1.37	0.551	1.004	No.10-24UNC
1	0.79	2.70	3.94	3.35	NPT 1	1.614	0.87	1.37	0.571	1.063	No.10-24UNC
1 1/4	0.98	2.85	3.94	3.70	NPT 1 1/4	2.047	0.93	1.5	0.531	1.024	1/4-20UNC
1 1/2	1.26	3.66	5.12	4.21	NPT 1 1/2	2.323	0.93	1.5	0.669	1.240	1/4-20UNC
2	1.57	3.98	7.09	4.72	NPT 2	2.835	0.93	1.5	0.591	1.240	1/4-20UNC

AKSCTHWZM
CODE NO. 237

MATERIAL LIST

No.	Name of Parts	Materials
1	BODY	A216 Gr. WCB
2	BODY CAP	A216 Gr. WCB
3	STEM	A276 TYPE 316
4	BALL	A276 TYPE 316
7	GLAND	A276 TYPE 304
8	GLAND PACKING	PTFE
9	HANDLE	CARBON STEEL (1)
10	HANDLE NUT	A194 Gr. 8
16	WASHER	A276 TYPE 304 (SIZE 1/2 & OVER)
30	BALL SEAT	HYPATITE PTFE
47	THRUST WASHER	G/F PTFE
A	LATCH LOCK	A276 TYPE 304

NOTE

(1) Plastic covering.
(2) BS 5351 Class 800 (size 1/4 to 1), KITZ standard (size 1 1/4 to 2).
(3) Valve rating 2000WOG (size 1/4 to 1), 1500WOG (size 1 1/4 to 2).

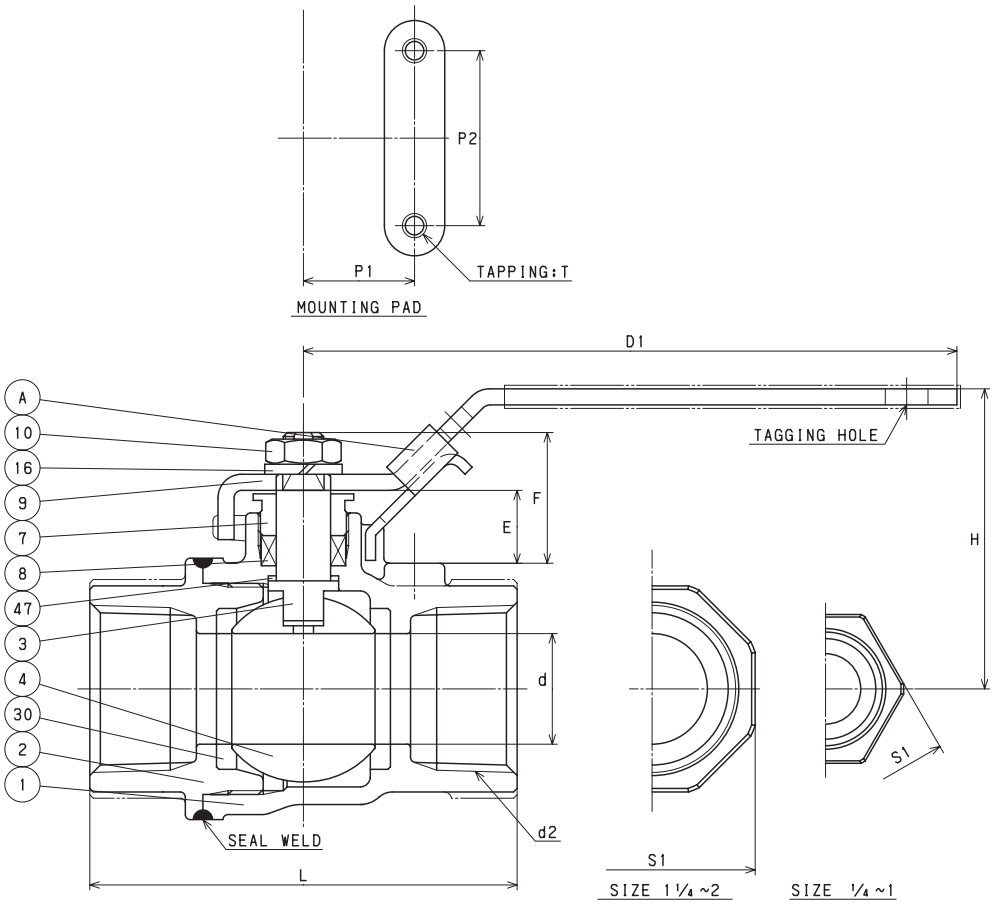

DIMENSIONS

Unit : inch

Nominal Size	d	H	D1	L	d2	S1	P1	P2	E	F	T
1/4	0.38	1.97	3.94	2.08	NPT 1/4	0.82	0.5	1.12	0.394	0.728	No.10-24UNC
3/8	0.46	1.97	3.94	2.08	NPT 3/8	0.94	0.5	1.12	0.425	0.760	No.10-24UNC
1/2	0.50	2.30	4.53	2.40	NPT 1/2	1.14	0.5	1.12	0.524	0.957	No.10-24UNC
3/4	0.59	2.42	4.53	2.71	NPT 3/4	1.38	0.87	1.37	0.496	0.929	No.10-24UNC
1	0.78	2.49	5.31	3.25	NPT 1	1.69	0.87	1.37	0.618	1.189	No.10-24UNC
1 1/4	1.00	2.65	5.31	3.54	NPT 1 1/4	2.09	0.93	1.5	0.614	1.185	1/4-20UNC
1 1/2	1.26	3.40	6.14	4.13	NPT 1 1/2	2.32	0.93	1.5	0.858	1.449	1/4-20UNC
2	1.50	3.64	7.48	4.61	NPT 2	2.83	0.93	1.5	0.831	1.421	1/4-20UNC

AKSCTHWZM-O
CODE NO. 237-LOH

MATERIAL LIST

No.	Name of Parts	Materials
1	BODY	A216 Gr. WCB
2	BODY CAP	A216 Gr. WCB
3	STEM	A276 TYPE 316
4	BALL	A276 TYPE 316
7	GLAND	A276 TYPE 304
8	GLAND PACKING	PTFE
9	HANDLE	CARBON STEEL (1)
10	HANDLE NUT	A194 Gr. 8
16	WASHER	A276 TYPE 304 (SIZE 1/2 & OVER)
30	BALL SEAT	HYPATITE PTFE
47	THRUST WASHER	G/F PTFE
A	LATCH LOCK	A276 TYPE 304

NOTE

(1) Plastic covering.

(2) BS 5351 Class 800 (size 1/4 to 1), KITZ standard (size 1 1/4 to 2).

(3) Valve rating 2000WOG (size 1/4 to 1), 1500WOG (size 1 1/4 to 2).

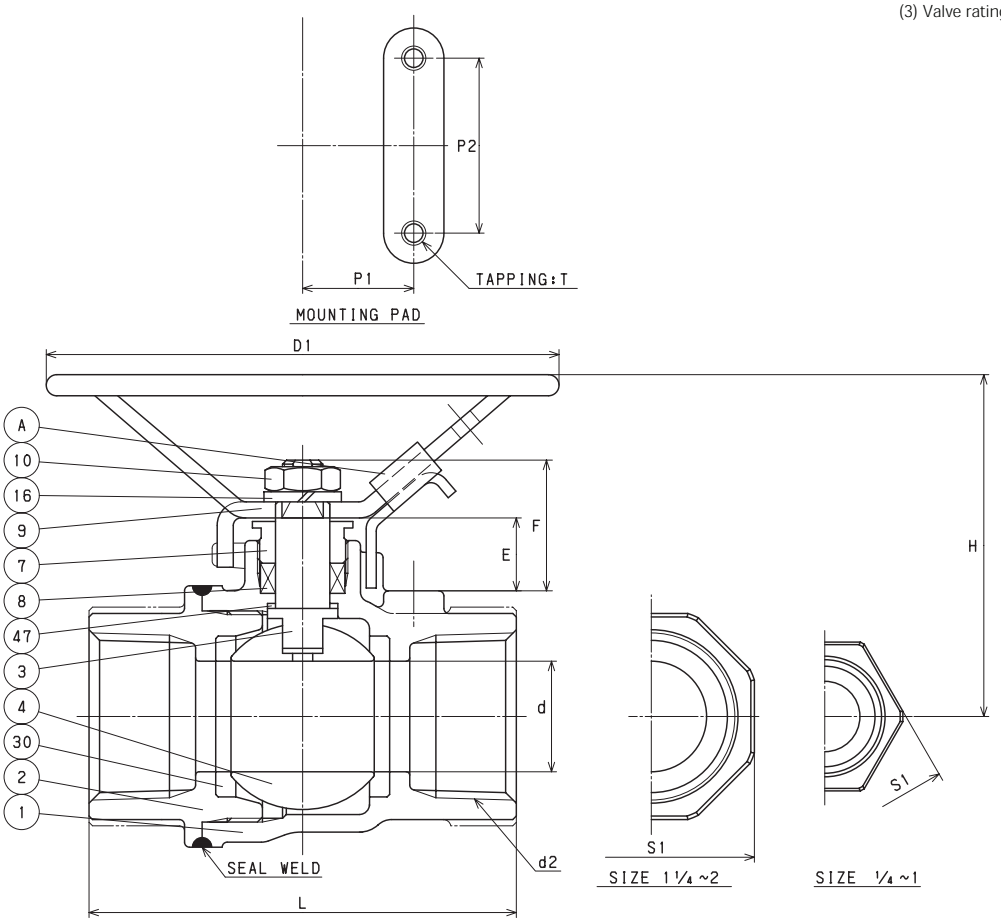

DIMENSIONS

Unit : inch

Nominal Size	d	H	D1	L	d2	S1	P1	P2	E	F	T
1/4	0.38	2.24	3.94	2.08	NPT 1/4	0.82	0.5	1.12	0.394	0.728	No.10-24UNC
3/8	0.46	2.24	3.94	2.08	NPT 3/8	0.94	0.5	1.12	0.425	0.760	No.10-24UNC
1/2	0.50	2.45	3.94	2.40	NPT 1/2	1.14	0.5	1.12	0.524	0.957	No.10-24UNC
3/4	0.59	2.51	3.94	2.71	NPT 3/4	1.38	0.87	1.37	0.496	0.929	No.10-24UNC
1	0.78	2.63	3.94	3.25	NPT 1	1.69	0.87	1.37	0.618	1.189	No.10-24UNC
1 1/4	1.00	2.81	3.94	3.54	NPT 1 1/4	2.09	0.93	1.5	0.614	1.185	1/4-20UNC
1 1/2	1.26	3.81	5.12	4.13	NPT 1 1/2	2.32	0.93	1.5	0.858	1.449	1/4-20UNC
2	1.50	4.03	5.12	4.61	NPT 2	2.83	0.93	1.5	0.831	1.421	1/4-20UNC

AKSCTHWZM-FS
CODE NO. 239

MATERIAL LIST

No.	Name of Parts	Materials
1	BODY	A216 Gr. WCB
2	BODY CAP	A216 Gr. WCB
3	STEM	A276 TYPE 316
4	BALL	A276 TYPE 316
7	GLAND	A276 TYPE 304
8	GLAND PACKING	FLEXIBLE GRAPHITE
9	HANDLE	CARBON STEEL (1)
10	HANDLE NUT	A194 Gr. 8
16	WASHER	A276 TYPE 304 (SIZE 1/2 & OVER)
30	BALL SEAT	HYPATITE PTFE
47	THRUST WASHER	G/F PTFE
A	LATCH LOCK	A276 TYPE 304

NOTE

(1) Plastic covering.
(2) BS 5351 Class 800 (size 1/4 to 1), KITZ standard (size 1 1/4 to 2).
(3) Valve rating 2000WOG (size 1/4 to 1), 1500WOG (size 1 1/4 to 2).

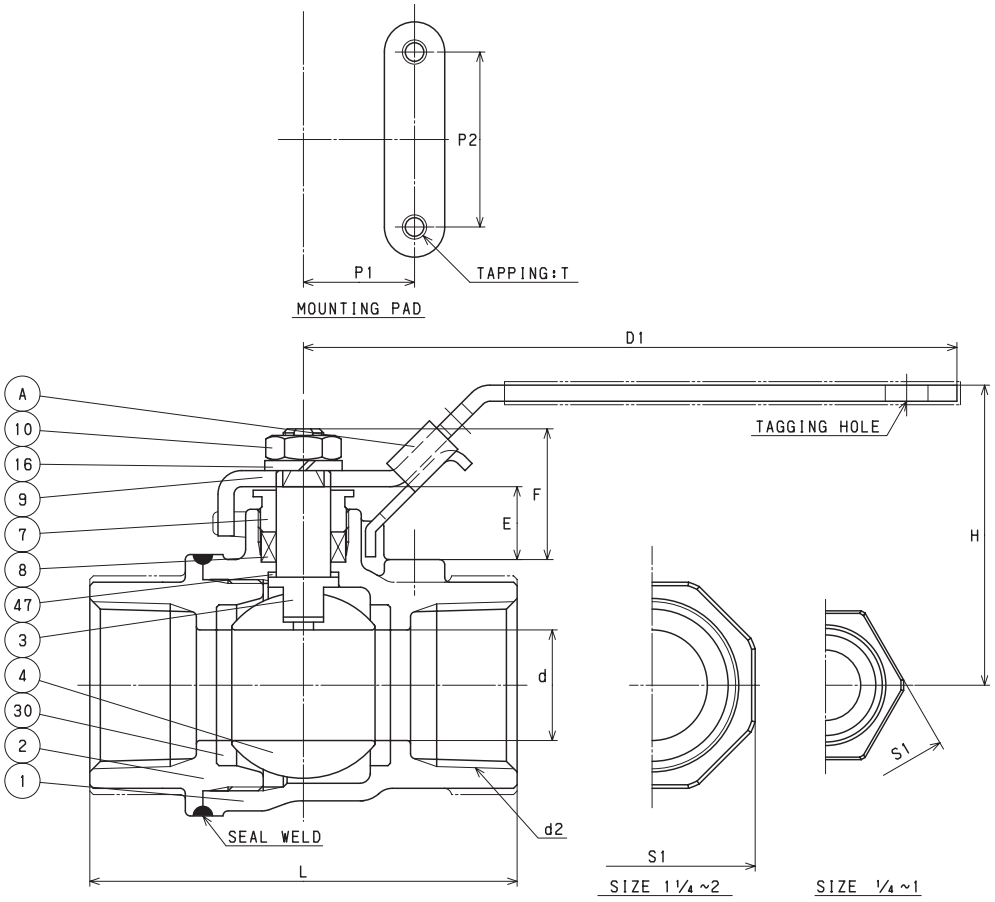

DIMENSIONS

Unit : inch

Nominal Size	d	H	D1	L	d2	S1	P1	P2	E	F	T
1/4	0.38	1.97	3.94	2.08	NPT 1/4	0.82	0.5	1.12	0.394	0.728	No.10-24UNC
3/8	0.46	1.97	3.94	2.08	NPT 3/8	0.94	0.5	1.12	0.425	0.760	No.10-24UNC
1/2	0.50	2.30	4.53	2.40	NPT 1/2	1.14	0.5	1.12	0.524	0.957	No.10-24UNC
3/4	0.59	2.42	4.53	2.71	NPT 3/4	1.38	0.87	1.37	0.496	0.929	No.10-24UNC
1	0.78	2.49	5.31	3.25	NPT 1	1.69	0.87	1.37	0.618	1.189	No.10-24UNC
1 1/4	1.00	2.65	5.31	3.54	NPT 1 1/4	2.09	0.93	1.5	0.614	1.185	1/4-20UNC
1 1/2	1.26	3.40	6.14	4.13	NPT 1 1/2	2.32	0.93	1.5	0.858	1.449	1/4-20UNC
2	1.50	3.64	7.48	4.61	NPT 2	2.83	0.93	1.5	0.831	1.421	1/4-20UNC

AKSCTHWZM-FSO
CODE NO. 239-LOH

MATERIAL LIST

No.	Name of Parts	Materials
1	BODY	A216 Gr. WCB
2	BODY CAP	A216 Gr. WCB
3	STEM	A276 TYPE 316
4	BALL	A276 TYPE 316
7	GLAND	A276 TYPE 304
8	GLAND PACKING	FLEXIBLE GRAPHITE
9	HANDLE	CARBON STEEL (1)
10	HANDLE NUT	A194 Gr. 8
16	WASHER	A276 TYPE 304 (SIZE 1/2 & OVER)
30	BALL SEAT	HYPATITE PTFE
47	THRUST WASHER	G/F PTFE
A	LATCH LOCK	A276 TYPE 304

NOTE

(1) Plastic covering.

(2) BS 5351 Class 800 (size 1/4 to 1), KITZ standard (size 1 1/4 to 2).

(3) Valve rating 2000WOG (size 1/4 to 1), 1500WOG (size 1 1/4 to 2).

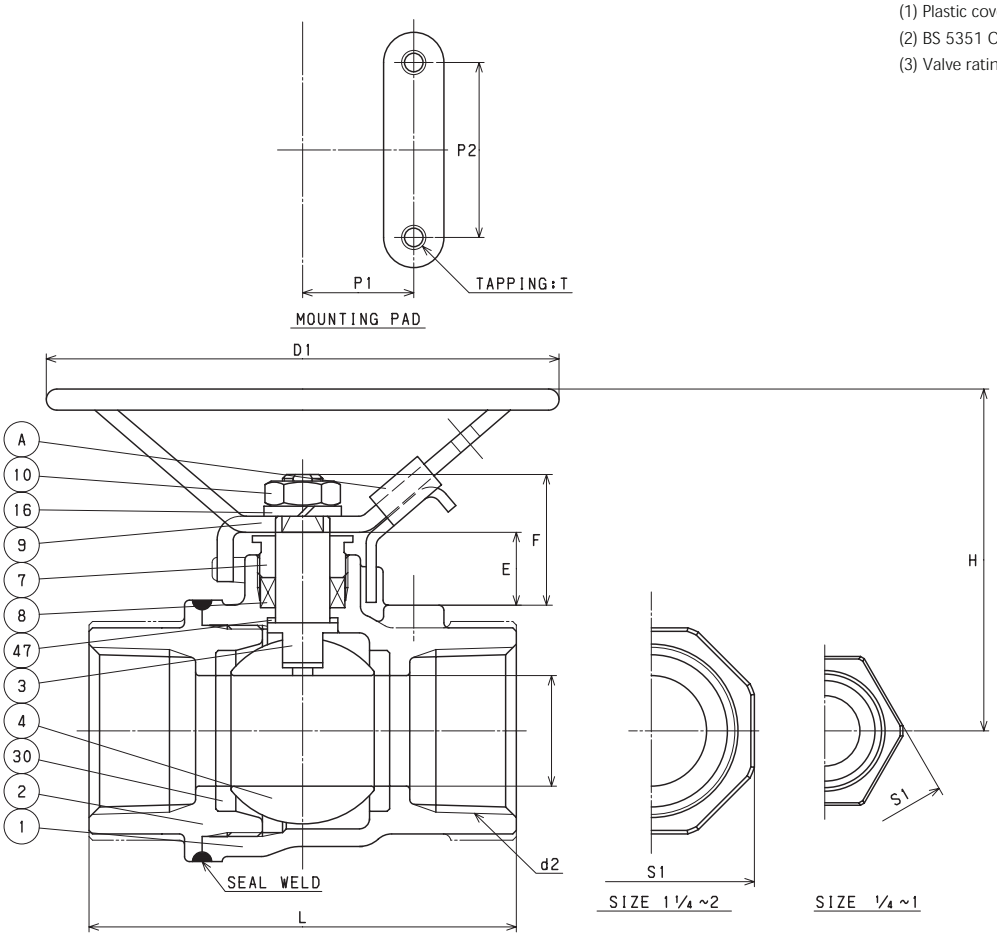

DIMENSIONS

Unit : inch

Nominal Size	d	H	D1	L	d2	S1	P1	P2	E	F	T
1/4	0.38	2.24	3.94	2.08	NPT 1/4	0.82	0.5	1.12	0.394	0.728	No.10-24UNC
3/8	0.46	2.24	3.94	2.08	NPT 3/8	0.94	0.5	1.12	0.425	0.760	No.10-24UNC
1/2	0.50	2.45	3.94	2.40	NPT 1/2	1.14	0.5	1.12	0.524	0.957	No.10-24UNC
3/4	0.59	2.51	3.94	2.71	NPT 3/4	1.38	0.87	1.37	0.496	0.929	No.10-24UNC
1	0.78	2.63	3.94	3.25	NPT 1	1.69	0.87	1.37	0.618	1.189	No.10-24UNC
1 1/4	1.00	2.81	3.94	3.54	NPT 1 1/4	2.09	0.93	1.5	0.614	1.185	1/4-20UNC
1 1/2	1.26	3.81	5.12	4.13	NPT 1 1/2	2.32	0.93	1.5	0.858	1.449	1/4-20UNC
2	1.50	4.03	5.12	4.61	NPT 2	2.83	0.93	1.5	0.831	1.421	1/4-20UNC

AKSCTKM
CODE NO. 50

MATERIAL LIST

No.	Name of Parts	Materials
1	BODY	A216 Gr. WCB (1)
3	STEM	A276 TYPE 316
4	BALL	A276 TYPE 316
7	GLAND	A276 TYPE 316
8	GLAND PACKING	G/F PTFE
9	HANDLE	A276 TYPE 430 (2)
10	SELF LOCKING NUT	A194 Gr. 8
16	SPRING WASHER	CARBON STEEL
29	INSERT	A276 TYPE 316 or A351 Gr. CF8M
30	BALL SEAT	G/F PTFE
43	SPRING	A167 TYPE 304
47	THRUST WASHER	REINFORCED PTFE

NOTE

(1) Phosphating.

(2) Plastic covering.

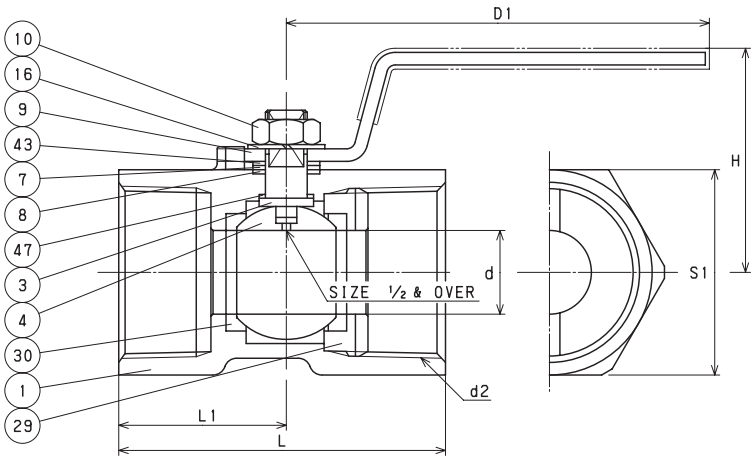

DIMENSIONS

Unit : inch

Nominal Size	d	H	D1	L	d2	S1	L1
1/4	0.18	1.22	2.36	1.54	NPT 1/4	0.67	0.75
3/8	0.27	1.42	2.76	1.73	NPT 3/8	0.83	0.83
1/2	0.36	1.61	3.35	2.22	NPT 1/2	0.99	1.08
3/4	0.49	1.73	3.35	2.32	NPT 3/4	1.26	1.18
1	0.63	1.89	3.94	2.80	NPT 1	1.50	1.42
1 1/4	0.79	2.13	3.94	3.07	NPT 1 1/4	1.93	1.57
1 1/2	0.96	2.56	4.92	3.27	NPT 1 1/2	2.09	1.67
2	1.26	2.83	4.92	3.94	NPT 2	2.56	2.01

AKSC3TFZM-O
CODE NO. 317F-LOH

MATERIAL LIST

No.	Name of Parts	Materials
1	BODY	A216 Gr. WCB
2	CAP	A216 Gr. WCB
3	STEM	A276 TYPE 316
4	BALL	A276 TYPE 316 or A351 Gr. CF8M
7	GLAND	A276 TYPE 316
8	GLAND PACKING	PTFE
9	HANDLE	A276 TYPE 430 (1)
10	HANDLE NUT	A194 Gr. 8
16A	WASHER	STAINLESS STEEL
16B	NAME PLATE	STAINLESS STEEL
19	GASKET	PTFE
30	BALL SEAT	HYPATITE PTFE
34	GLAND NUT	A194 Gr. 8
35	CAP BOLT	A193 Gr. B8
40	LOCK PLATE	STAINLESS STEEL
43	CONED DISC SPRING	STAINLESS STEEL
47	THRUST WASHER	25% CARBON FILLED PTFE (2)
126	STOPPER PIN	A276 TYPE 304
A	LATCH LOCK	STAINLESS STEEL

NOTE

(1) Plastic covering.

(2) All valves have an anti-static thrust washer insuring positive conductivity between body and stem.

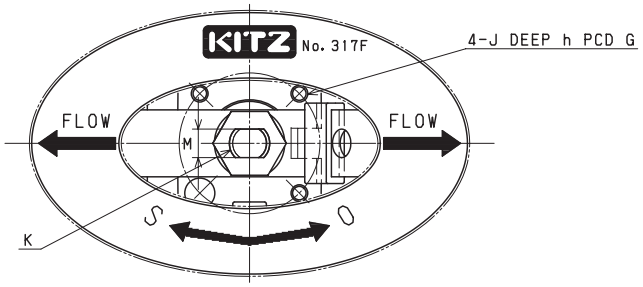

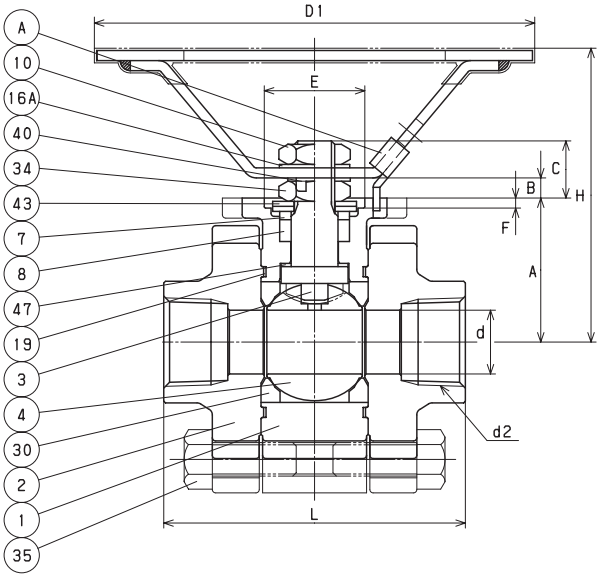

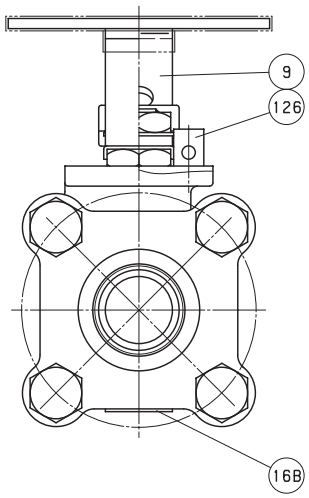

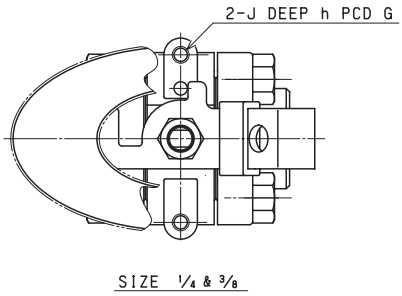

DIMENSIONS

Unit : inch

Nominal Size						Mounting Dimensions for Actuator										
in.	d	H	D1	L	d2	A	B	C	E	F	G	J	h	K	M	ISO 5211 Flange Type
1/4	0.39	2.48	3.94	2.48	NPT 1/4	1.043	0.079	0.413	• •	• •	1.969	1/4-20UNC	0.275	M8	0.197	• •
3/8	0.39	2.48	3.94	2.48	NPT 3/8	1.043	0.079	0.413	• •	• •	1.969	1/4-20UNC	0.275	M8	0.197	• •
1/2	0.55	3.07	5.12	2.80	NPT 1/2	1.378	0.169	0.559	0.984	0.118	1.417	1/4-20UNC	0.197	M10	0.236	F03
3/4	0.75	3.43	5.12	3.54	NPT 3/4	1.693	0.197	0.669	1.181	0.118	1.654	1/4-20UNC	0.315	M12	0.335	F04

AKSC3TFZM
CODE NO. 317F

MATERIAL LIST

No.	Name of Parts	Materials
1	BODY	A216 Gr. WCB
2	CAP	A216 Gr. WCB
3	STEM	A276 TYPE 316
4	BALL	A276 TYPE 316 or A351 Gr. CF8M
7	GLAND	A276 TYPE 316
8	GLAND PACKING	PTFE
9	HANDLE	A276 TYPE 430 (1)
10	HANDLE NUT	A194 Gr. 8
16A	WASHER	STAINLESS STEEL
16B	NAME PLATE	STAINLESS STEEL
19	GASKET	PTFE
30	BALL SEAT	HYPATITE PTFE
34	GLAND NUT	A194 Gr. 8
35	CAP BOLT	A193 Gr. B8
40	LOCK PLATE	STAINLESS STEEL
43	CONED DISC SPRING	STAINLESS STEEL
47	THRUST WASHER	25% CARBON FILLED PTFE (2)
126	STOPPER PIN	A276 TYPE 304
A	LATCH LOCK	STAINLESS STEEL

NOTE

(1) Plastic covering.

(2) All valves have an anti-static thrust washer insuring positive conductivity between body and stem.

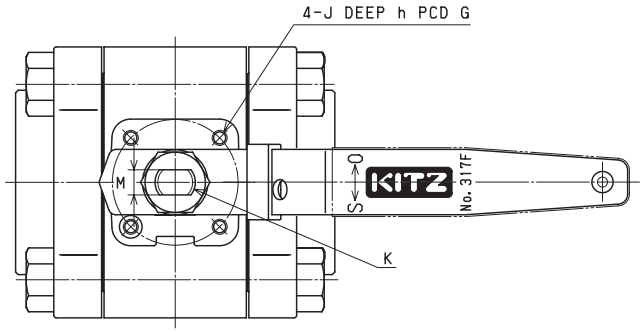

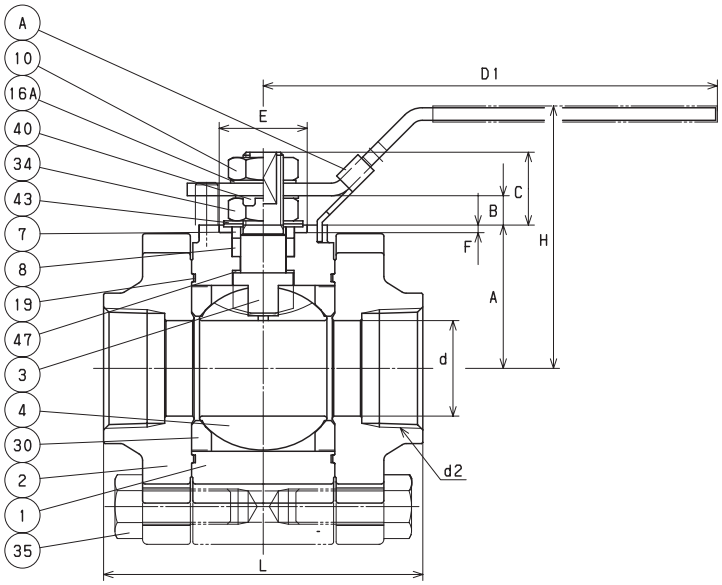

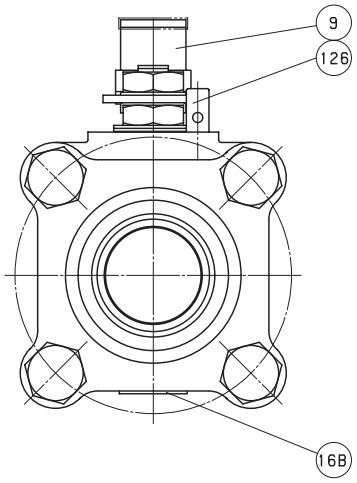

DIMENSIONS

Unit : inch

Nominal Size						Mounting Dimensions for Actuator										
in.	d	H	D1	L	d2	A	B	C	E	F	G	J	h	K	M	ISO 5211 Flange Type
1	0.94	3.23	5.91	4.06	NPT 1	1.732	0.531	1.083	1.181	0.118	1.654	1/4-20UNC	0.315	M14	0.394	F04
1 1/4	1.18	3.46	5.91	4.33	NPT 1 1/4	1.949	0.531	1.071	1.181	0.118	1.654	1/4-20UNC	0.315	M14	0.394	F04
1 1/2	1.50	4.09	7.09	5.00	NPT 1 1/2	2.244	0.461	1.142	1.378	0.118	1.969	1/4-20UNC	0.394	M16	0.394	F05

AKSC3TFZM
CODE NO. 317F

MATERIAL LIST

No.	Name of Parts	Materials
1	BODY	A216 Gr. WCB
2	CAP	A216 Gr. WCB
3	STEM	A276 TYPE 316
4	BALL	A351 Gr. CF8M
7	GLAND	A351 Gr. CF8
8	GLAND PACKING	PTFE
9	HANDLE	DUCTILE IRON
16	HANDLE PLATE	STAINLESS STEEL
19	GASKET	PTFE
30	BALL SEAT	HYPATITE PTFE
35	CAP BOLT	A193 Gr. B8
36	GLAND BOLT	A193 Gr. B8
40	KEY LOCK PLATE	STAINLESS STEEL
47	THRUST WASHER	25% CARBON FILLED PTFE (1)
48	SNAP RING	STAINLESS STEEL
49	STOPPER	STAINLESS STEEL
123	HANDLE BOLT	STAINLESS STEEL
124	SPRING & PIN	A313 & A276 TYPE 316
126	STOPPER PIN	STAINLESS STEEL

NOTE

(1) All valves have an anti-static thrust washer insuring positive conductivity between body and stem.

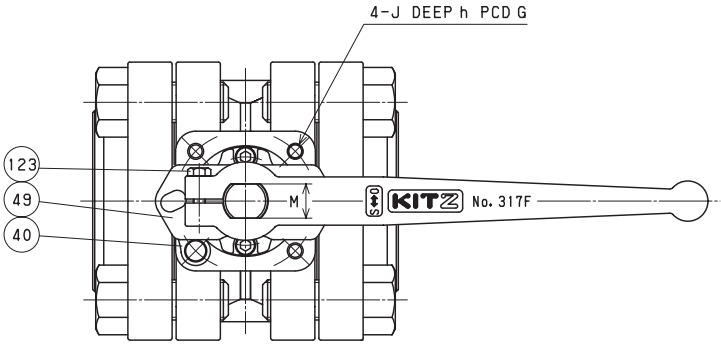

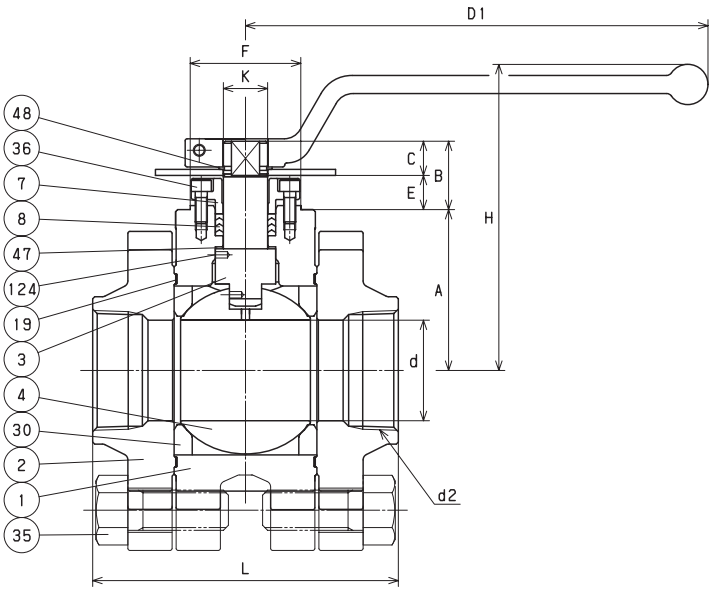

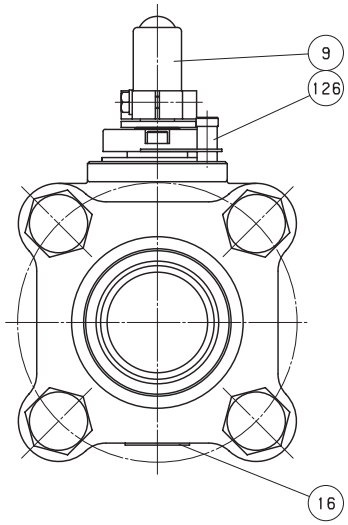

DIMENSIONS

Unit : inch

Nominal Size						Mounting Dimensions for Actuator										
in.	d	H	D1	L	d2	A	B	C	E	F	K	G	J	h	M	ISO 5211 Flange Type
2	1.97	5.98	9.06	5.98	NPT 2	3.150	1.339	0.669	0.669	2.165	0.866	2.756	5/16-18UNC	0.591	0.669	F07

AKSC3THZM-O
CODE NO. 317-LOH

MATERIAL LIST

No.	Name of Parts	Materials
1	BODY	A216 Gr. WCB
2	CAP	A216 Gr. WCB
3	STEM	A276 TYPE 316
4	BALL	A276 TYPE 316 or A351 Gr. CF8M
7	GLAND	A276 TYPE 316
8	GLAND PACKING	PTFE
9	HANDLE	A276 TYPE 430 (1)
10	HANDLE NUT	A194 Gr. 8
16A	WASHER	STAINLESS STEEL
16B	NAME PLATE	STAINLESS STEEL
19	GASKET	PTFE
30	BALL SEAT	HYPATITE PTFE
34	GLAND NUT	A194 Gr. 8
35	CAP BOLT	A193 Gr. B8
40	LOCK PLATE	STAINLESS STEEL
43	CONED DISC SPRING	STAINLESS STEEL
47	THRUST WASHER	25% CARBON FILLED PTFE (2)
126	STOPPER PIN	A276 TYPE 304
A	LATCH LOCK	STAINLESS STEEL

NOTE

(1) Plastic covering.

(2) All valves have an anti-static thrust washer insuring positive conductivity between body and stem.

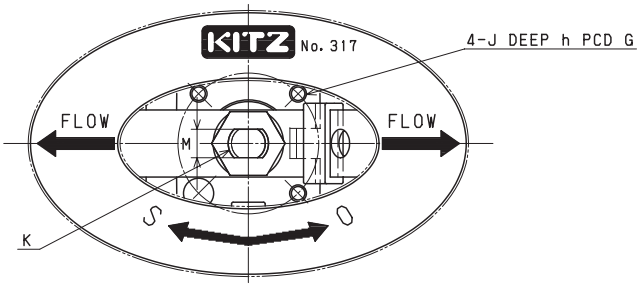

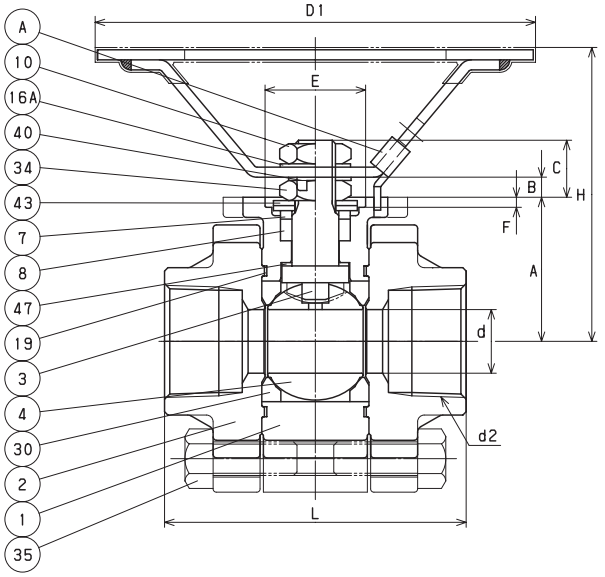

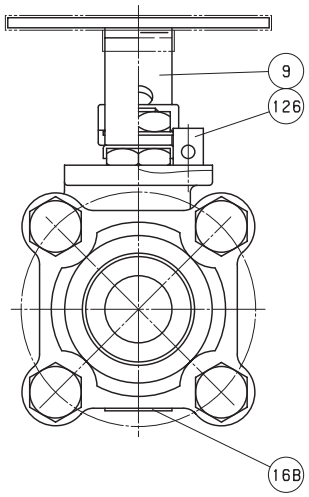

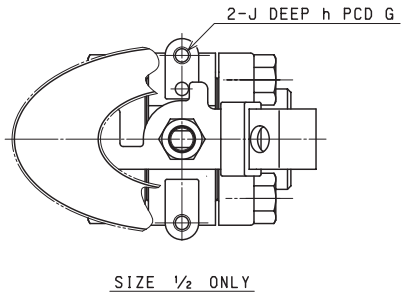

DIMENSIONS

Unit : inch

Nominal Size						Mounting Dimensions for Actuator										
in.	d	H	D1	L	d2	A	B	C	E	F	G	J	h	K	M	ISO 5211 Flange Type
1/2	0.39	2.48	3.94	2.48	NPT 1/2	1.043	0.079	0.413	• •	• •	1.969	1/4-20UNC	0.275	M8	0.197	• •
3/4	0.55	3.07	5.12	2.80	NPT 3/4	1.378	0.169	1.559	0.984	0.118	1.417	1/4-20UNC	0.197	M10	0.236	F03
1	0.75	3.43	5.12	3.54	NPT 1	1.693	0.197	0.669	1.181	0.118	1.654	1/4-20UNC	0.315	M12	0.335	F04

AKSC3THZM
CODE NO. 317

MATERIAL LIST

No.	Name of Parts	Materials
1	BODY	A216 Gr. WCB
2	CAP	A216 Gr. WCB
3	STEM	A276 TYPE 316
4	BALL	A276 TYPE 316 or A351 Gr. CF8M
7	GLAND	A276 TYPE 316
8	GLAND PACKING	PTFE
9	HANDLE	A276 TYPE 430 (1)
10	HANDLE NUT	A194 Gr. 8
16A	WASHER	STAINLESS STEEL
16B	NAME PLATE	STAINLESS STEEL
19	GASKET	PTFE
30	BALL SEAT	HYPATITE PTFE
34	GLAND NUT	A194 Gr. 8
35	CAP BOLT	A193 Gr. B8
40	LOCK PLATE	STAINLESS STEEL
43	CONED DISC SPRING	STAINLESS STEEL
47	THRUST WASHER	25% CARBON FILLED PTFE (2)
126	STOPPER PIN	A276 TYPE 304
A	LATCH LOCK	STAINLESS STEEL

NOTE

(1) Plastic covering.
(2) All valves have an anti-static thrust washer insuring positive conductivity between body and stem.

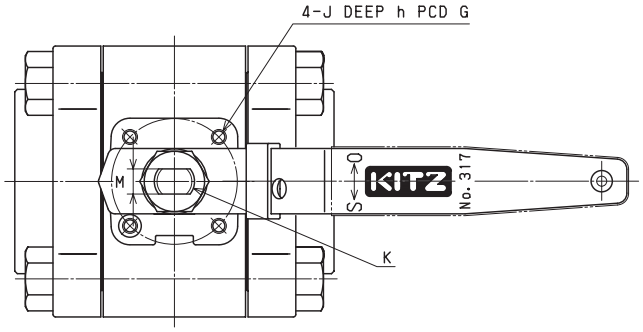

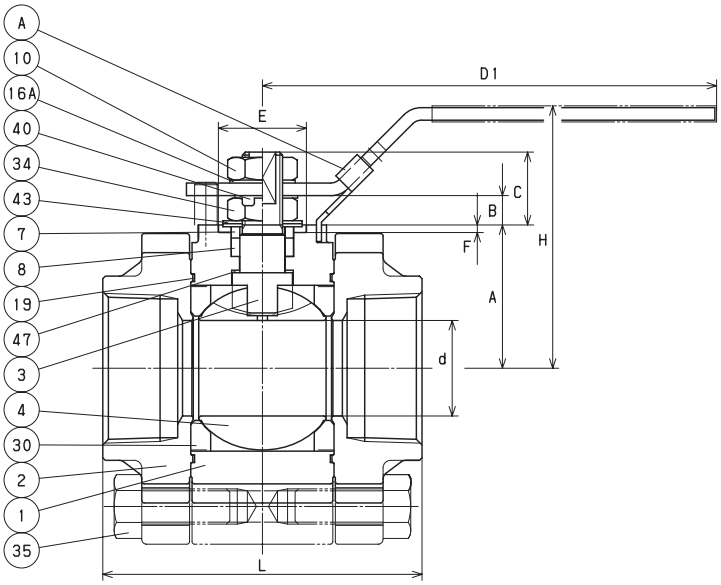

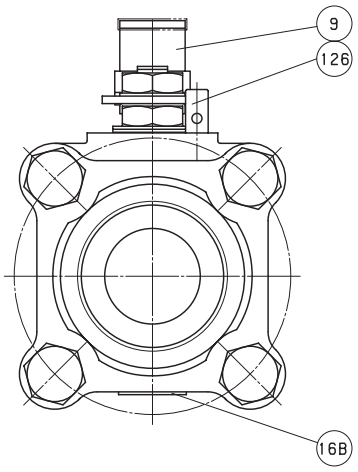

DIMENSIONS

Unit : inch

Nominal Size						Mounting Dimensions for Actuator										
in.	d	H	D1	L	d2	A	B	C	E	F	G	J	h	K	M	ISO 5211 Flange Type
1 1/4	0.94	3.23	5.91	4.06	NPT 1 1/4	1.732	0.531	1.083	1.181	0.118	1.654	1/4-20UNC	0.315	M14	0.394	F04
1 1/2	1.18	3.46	5.91	4.33	NPT 1 1/2	1.949	0.531	1.071	1.181	0.118	1.654	1/4-20UNC	0.315	M14	0.394	F04
2	1.50	4.09	7.09	5.00	NPT 2	2.244	0.461	1.142	1.378	0.118	1.969	1/4-20UNC	0.394	M16	0.394	F05

AKSC3THZM
CODE NO. 317

MATERIAL LIST

No.	Name of Parts	Materials
1	BODY	A216 Gr. WCB
2	CAP	A216 Gr. WCB
3	STEM	A276 TYPE 316
4	BALL	A351 Gr. CF8M
7	GLAND	A351 Gr. CF8
8	GLAND PACKING	PTFE
9	HANDLE	DUCTILE IRON
16	HANDLE PLATE	STAINLESS STEEL
19	GASKET	PTFE
30	BALL SEAT	HYPATITE PTFE
35	CAP BOLT	A193 Gr. B8
36	GLAND BOLT	A193 Gr. B8
40	KEY LOCK PLATE	STAINLESS STEEL
47	THRUST WASHER	25% CARBON FILLED PTFE (1)
48	SNAP RING	STAINLESS STEEL
49	STOPPER	STAINLESS STEEL
123	HANDLE BOLT	STAINLESS STEEL
124	SPRING & PIN	A313 & A276 TYPE 316
126	STOPPER PIN	STAINLESS STEEL

NOTE

(1) All valves have an anti-static thrust washer insuring positive conductivity between body and stem.

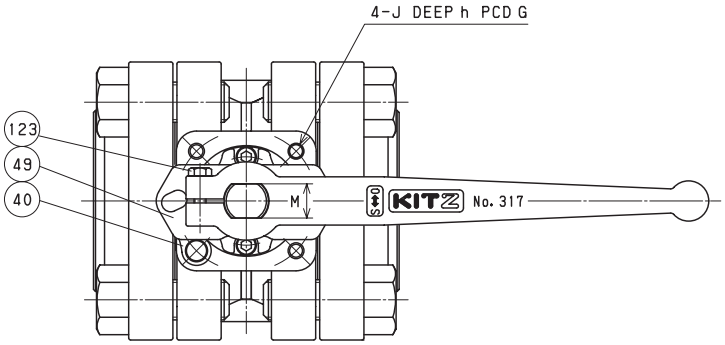

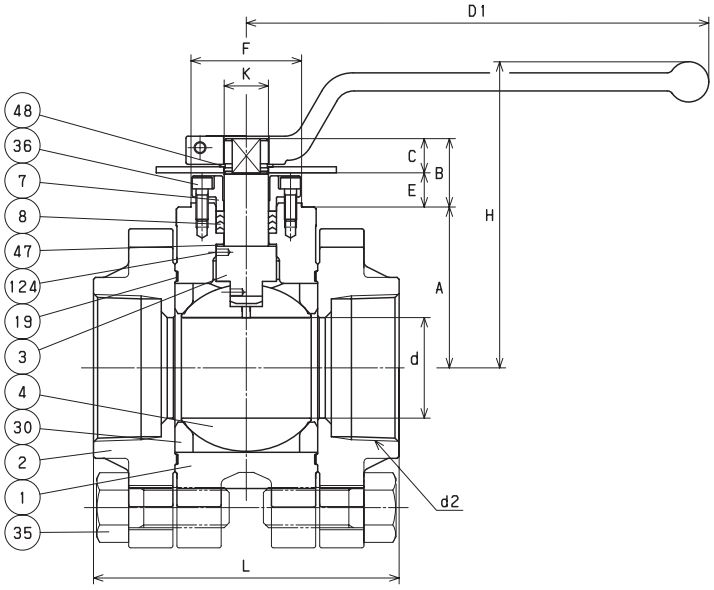

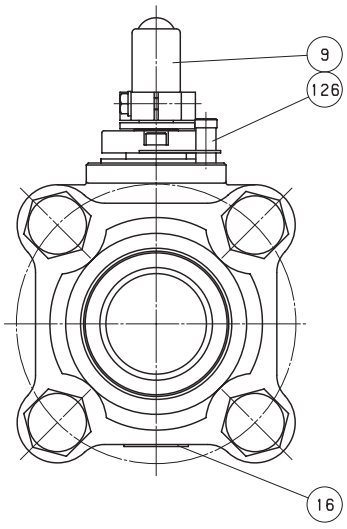

DIMENSIONS

Unit : inch

Nominal Size						Mounting Dimensions for Actuator										
in.	d	H	D1	L	d2	A	B	C	E	F	K	G	J	h	M	ISO 5211 Flange Type
2 1/2	1.97	5.98	9.06	5.98	NPT 2 1/2	3.150	1.339	0.669	0.669	2.165	0.866	2.756	5/16-18UNC	0.591	0.669	F07

AKSC3TFZM-FSO
CODE NO. 319F-LOH

MATERIAL LIST

No.	Name of Parts	Materials
1	BODY	A216 Gr. WCB
2	CAP	A216 Gr. WCB
3	STEM	A276 TYPE 316
4	BALL	A276 TYPE 316 or A351 Gr. CF8M
7	GLAND	A276 TYPE 316
8 A	GLAND PACKING	FLEXIBLE GRAPHITE
8 B	SPACER PACKING	G/F PTFE
9	HANDLE	A276 TYPE 430 (1)
10	HANDLE NUT	A194 Gr. 8
16 A	WASHER	STAINLESS STEEL
16 B	NAME PLATE	STAINLESS STEEL
19	GASKET	FLEXIBLE GRAPHITE
30	BALL SEAT	HYPATITE PTFE
34	GLAND NUT	A194 Gr. 8
35	CAP BOLT	A193 Gr. B8
40	LOCK PLATE	STAINLESS STEEL
43	CONED DISC SPRING	STAINLESS STEEL
47	THRUST WASHER	25% CARBON FILLED PTFE (2)
126	STOPPER PIN	A276 TYPE 304
A	LATCH LOCK	STAINLESS STEEL

NOTE

(1) Plastic covering.
(2) All valves have an anti-static thrust washer insuring positive conductivity between body and stem.

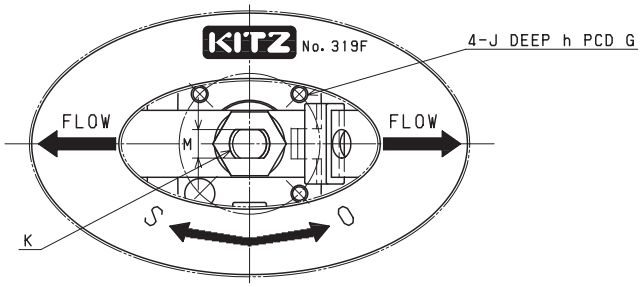

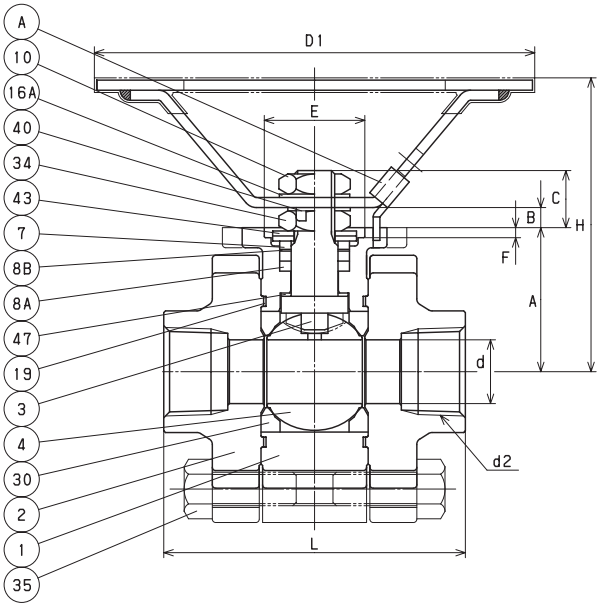

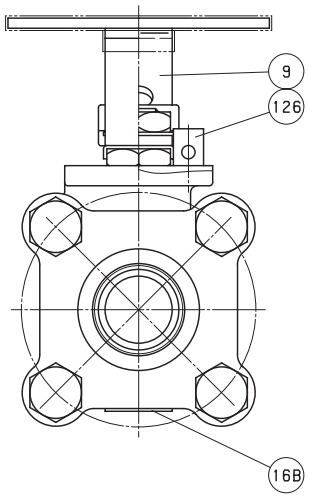

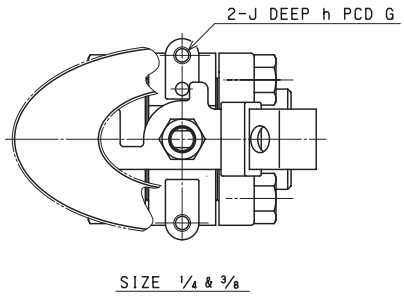

DIMENSIONS

Unit : inch

Nominal Size						Mounting Dimensions for Actuator										
in.	d	H	D1	L	d2	A	B	C	E	F	G	J	h	K	M	ISO 5211 Flange Type
1/4	0.39	2.48	3.94	2.48	NPT 1/4	1.043	0.079	0.413	• •	• •	1.969	1/4-20UNC	0.275	M8	0.197	• •
3/8	0.39	2.48	3.94	2.48	NPT 3/8	1.043	0.079	0.413	• •	• •	1.969	1/4-20UNC	0.275	M8	0.197	• •
1/2	0.55	3.07	5.12	2.80	NPT 1/2	1.378	0.169	0.559	0.984	0.118	1.417	1/4-20UNC	0.197	M10	0.236	F03
3/4	0.75	3.43	5.12	3.54	NPT 3/4	1.693	0.197	0.669	1.181	0.118	1.654	1/4-20UNC	0.315	M12	0.335	F04

AKSC3TFZM-FS
CODE NO. 319F

MATERIAL LIST

No.	Name of Parts	Materials
1	BODY	A216 Gr. WCB
2	CAP	A216 Gr. WCB
3	STEM	A276 TYPE 316
4	BALL	A276 TYPE 316 or A351 Gr. CF8M
7	GLAND	A276 TYPE 316
8A	GLAND PACKING	FLEXIBLE GRAPHITE
8B	SPACER PACKING	G/F PTFE
9	HANDLE	A276 TYPE 430 (1)
10	HANDLE NUT	A194 Gr. 8
16A	WASHER	STAINLESS STEEL
16B	NAME PLATE	STAINLESS STEEL
19	GASKET	FLEXIBLE GRAPHITE
30	BALL SEAT	HYPATITE PTFE
34	GLAND NUT	A194 Gr. 8
35	CAP BOLT	A193 Gr. B8
40	LOCK PLATE	STAINLESS STEEL
43	CONED DISC SPRING	STAINLESS STEEL
47	THRUST WASHER	25% CARBON FILLED PTFE (2)
126	STOPPER PIN	A276 TYPE 304
A	LATCH LOCK	STAINLESS STEEL

NOTE

(1) Plastic covering.
(2) All valves have an anti-static thrust washer insuring positive conductivity between body and stem.

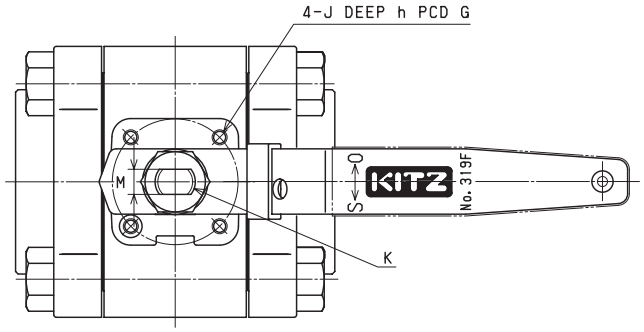

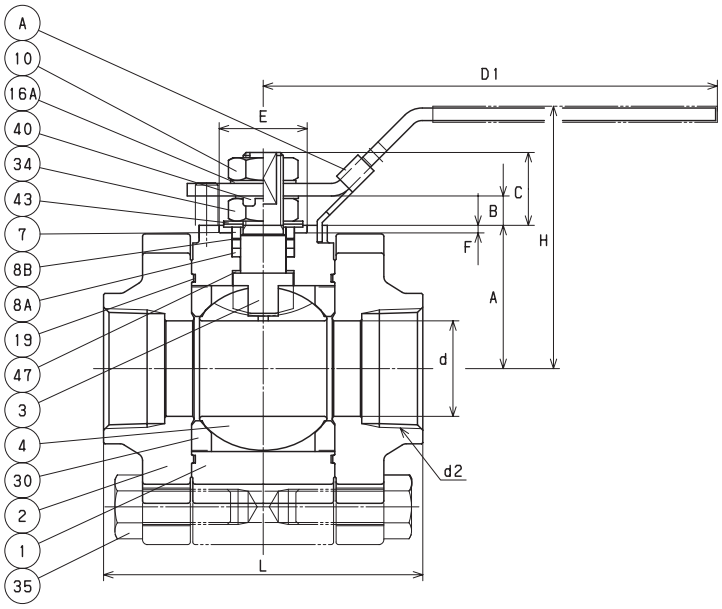

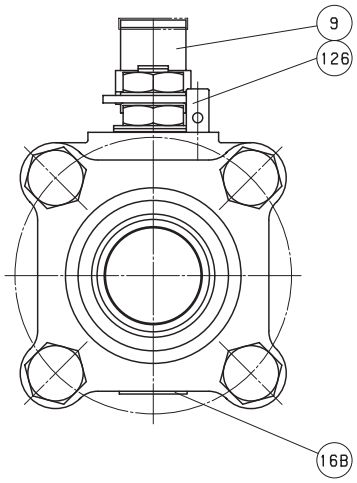

DIMENSIONS

Unit : inch

Nominal Size						Mounting Dimensions for Actuator										
in.	d	H	D1	L	d2	A	B	C	E	F	G	J	h	K	M	ISO 5211 Flange Type
1	0.94	3.23	5.91	4.06	NPT 1	1.732	0.531	1.083	1.181	0.118	1.654	1/4-20UNC	0.315	M14	0.394	F04
1 1/4	1.18	3.46	5.91	4.33	NPT 1 1/4	1.949	0.531	1.071	1.181	0.118	1.654	1/4-20UNC	0.315	M14	0.394	F04
1 1/2	1.50	4.09	7.09	5.00	NPT 1 1/2	2.244	0.461	1.142	1.378	0.118	1.969	1/4-20UNC	0.394	M16	0.394	F05

AKSC3TFZM-FS
CODE NO. 319F

MATERIAL LIST

No.	Name of Parts	Materials
1	BODY	A216 Gr. WCB
2	CAP	A216 Gr. WCB
3	STEM	A276 TYPE 316
4	BALL	A351 Gr. CF8M
7	GLAND	A351 Gr. CF8
8A	GLAND PACKING	FLEXIBLE GRAPHITE
8B	SPACER PACKING	G/F PTFE
9	HANDLE	DUCTILE IRON
16	NAME PLATE	STAINLESS STEEL
19	GASKET	(2)
30	BALL SEAT	HYPATITE PTFE
35	CAP BOLT	A193 Gr. B8
36	GLAND BOLT	A193 Gr. B8
40	KEY LOCK PLATE	STAINLESS STEEL
47	THRUST WASHER	25% CARBON FILLED PTFE (1)
48	SNAP RING	STAINLESS STEEL
49	STOPPER	STAINLESS STEEL
123	HANDLE BOLT	STAINLESS STEEL
124	SPRING & PIN	A313 & A276 TYPE 316
126	STOPPER PIN	STAINLESS STEEL

NOTE

(1) All valves have an anti-static thrust washer insuring positive conductivity between body and stem.

(2) Flexible graphite with stainless foil insert.

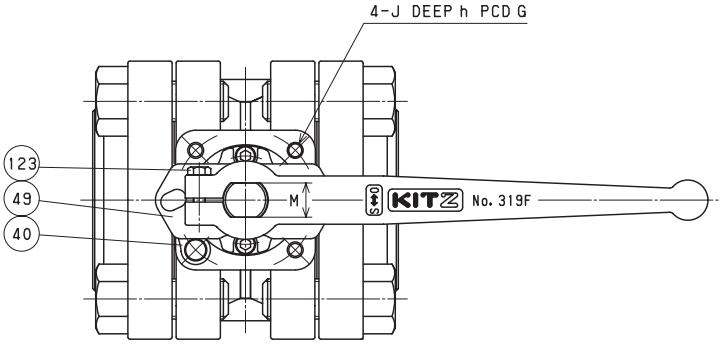

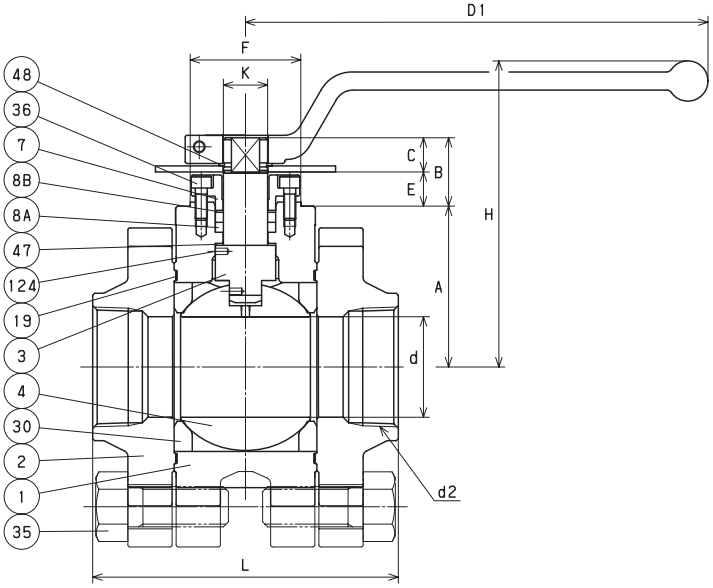

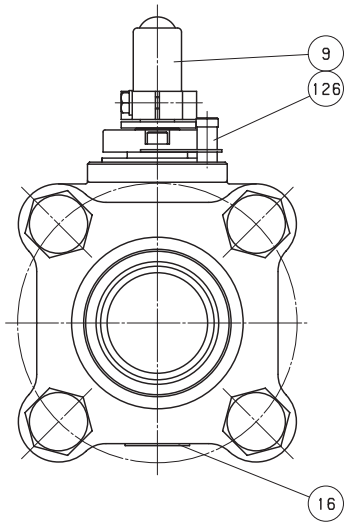

DIMENSIONS

Unit : inch

Nominal Size						Mounting Dimensions for Actuator										
in.	d	H	D1	L	d2	A	B	C	E	F	K	G	J	h	M	ISO 5211 Flange Type
2	1.97	5.98	9.06	5.98	NPT 2	3.150	1.339	0.669	0.669	2.165	0.866	2.756	5/16-18UNC	0.591	0.669	F07

AKSC3THZM-FSO
CODE NO. 319-LOH

MATERIAL LIST

No.	Name of Parts	Materials
1	BODY	A216 Gr. WCB
2	CAP	A216 Gr. WCB
3	STEM	A276 TYPE 316
4	BALL	A276 TYPE 316 or A351 Gr. CF8M
7	GLAND	A276 TYPE 316
8A	GLAND PACKING	FLEXIBLE GRAPHITE
8B	SPACER PACKING	G/F PTFE
9	HANDLE	A276 TYPE 430 (1)
10	HANDLE NUT	A194 Gr. 8
16A	WASHER	STAINLESS STEEL
16B	NAME PLATE	STAINLESS STEEL
19	GASKET	FLEXIBLE GRAPHITE
30	BALL SEAT	HYPATITE PTFE
34	GLAND NUT	A194 Gr. 8
35	CAP BOLT	A193 Gr. B8
40	LOCK PLATE	STAINLESS STEEL
43	CONED DISC SPRING	STAINLESS STEEL
47	THRUST WASHER	25% CARBON FILLED PTFE (2)
126	STOPPER PIN	A276 TYPE 304
A	LATCH LOCK	STAINLESS STEEL

NOTE

(1) Plastic covering.
(2) All valves have an anti-static thrust washer insuring positive conductivity between body and stem.

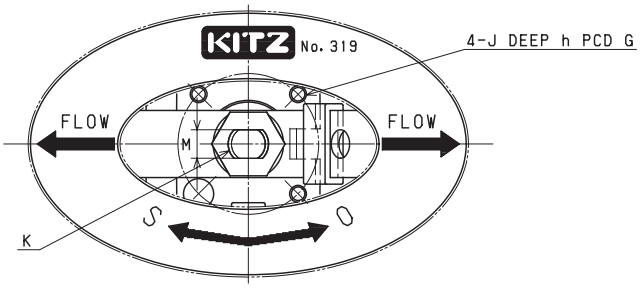

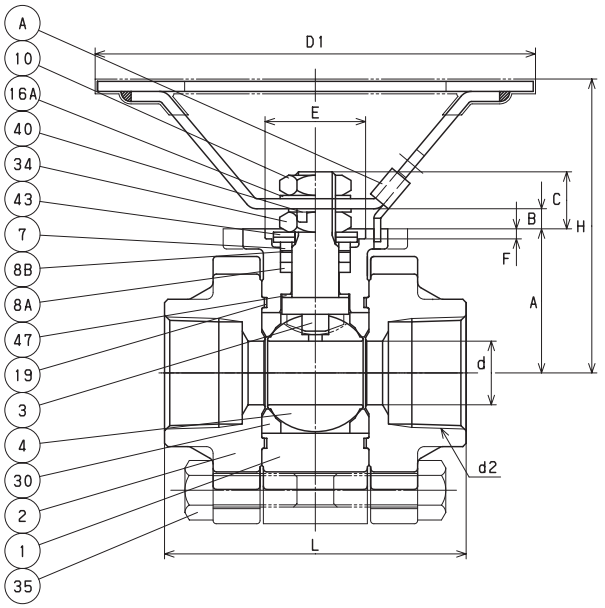

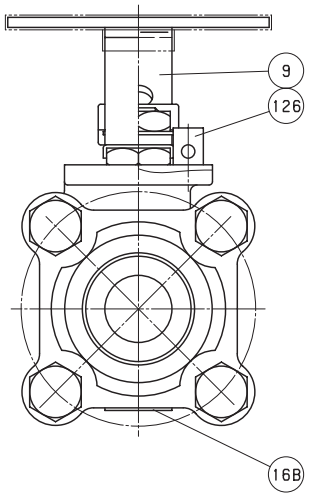

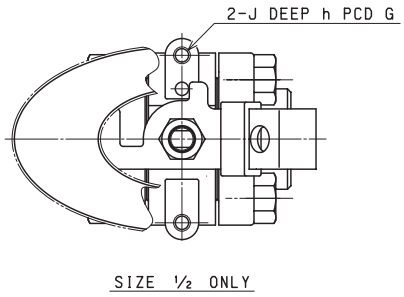

DIMENSIONS

Unit : inch

Nominal Size						Mounting Dimensions for Actuator										
in.	d	H	D1	L	d2	A	B	C	E	F	G	J	h	K	M	ISO 5211 Flange Type
1/2	0.39	2.48	3.94	2.48	NPT 1/2	1.043	0.079	0.413	• •	• •	1.969	1/4-20UNC	0.275	M8	0.197	• •
3/4	0.55	3.07	5.12	2.80	NPT 3/4	1.378	0.169	0.559	0.984	0.118	1.417	1/4-20UNC	0.197	M10	0.236	F03
1	0.75	3.43	5.12	3.54	NPT 1	1.693	0.197	0.669	1.181	0.118	1.654	1/4-20UNC	0.315	M12	0.335	F04

AKSC3THZM-FS
CODE NO. 319

MATERIAL LIST

No.	Name of Parts	Materials
1	BODY	A216 Gr. WCB
2	CAP	A216 Gr. WCB
3	STEM	A276 TYPE 316
4	BALL	A276 TYPE 316 or A351 Gr. CF8M
7	GLAND	A276 TYPE 316
8 A	GLAND PACKING	FLEXIBLE GRAPHITE
8 B	SPACER PACKING	G/F PTFE
9	HANDLE	A276 TYPE 430 (1)
10	HANDLE NUT	A194 Gr. 8
16 A	WASHER	STAINLESS STEEL
16 B	NAME PLATE	STAINLESS STEEL
19	GASKET	FLEXIBLE GRAPHITE
30	BALL SEAT	HYPATITE PTFE
34	GLAND NUT	A194 Gr. 8
35	CAP BOLT	A193 Gr. B8
40	LOCK PLATE	STAINLESS STEEL
43	CONED DISC SPRING	STAINLESS STEEL
47	THRUST WASHER	25% CARBON FILLED PTFE (2)
126	STOPPER PIN	A276 TYPE 304
A	LATCH LOCK	STAINLESS STEEL

NOTE

(1) Plastic covering.
(2) All valves have an anti-static thrust washer insuring positive conductivity between body and stem.

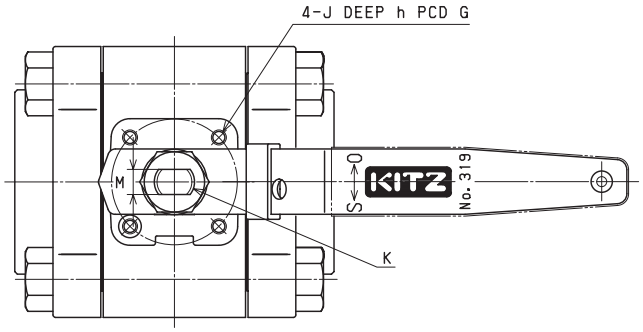

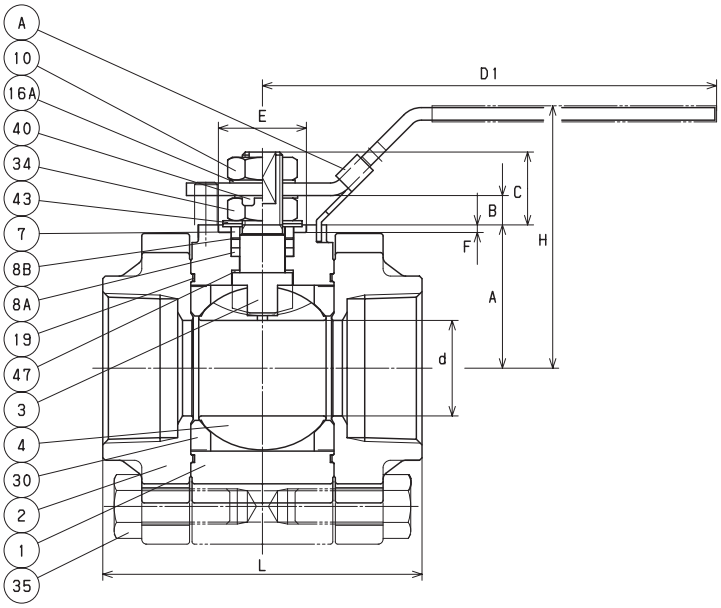

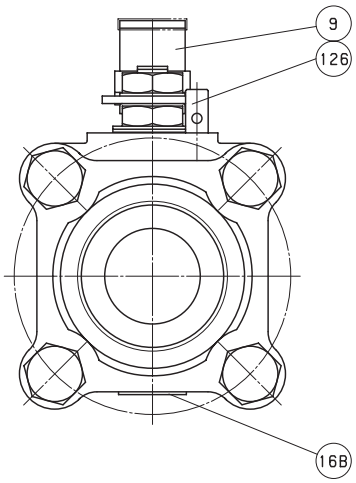

DIMENSIONS

Unit : inch

Nominal Size						Mounting Dimensions for Actuator										
in.	d	H	D1	L	d2	A	B	C	E	F	G	J	h	K	M	ISO 5211 Flange Type
1 1/4	0.94	3.23	5.91	4.06	NPT 1 1/4	1.732	0.531	1.083	1.181	0.118	1.654	1/4-20UNC	0.315	M14	0.394	F04
1 1/2	1.18	3.46	5.91	4.33	NPT 1 1/2	1.949	0.531	1.071	1.181	0.118	1.654	1/4-20UNC	0.315	M14	0.394	F04
2	1.50	4.09	7.09	5.00	NPT 2	2.244	0.461	1.142	1.378	0.118	1.969	1/4-20UNC	0.394	M16	0.394	F05

AKSC3THZM-FS
CODE NO. 319

MATERIAL LIST

No.	Name of Parts	Materials
1	BODY	A216 Gr. WCB
2	CAP	A216 Gr. WCB
3	STEM	A276 TYPE 316
4	BALL	A351 Gr. CF8M
7	GLAND	A351 Gr. CF8
8A	GLAND PACKING	FLEXIBLE GRAPHITE
8B	SPACER PACKING	G/F PTFE
9	HANDLE	DUCTILE IRON
16	NAME PLATE	STAINLESS STEEL
19	GASKET	(2)
30	BALL SEAT	HYPATITE PTFE
35	CAP BOLT	A193 Gr. B8
36	GLAND BOLT	A193 Gr. B8
40	KEY LOCK PLATE	STAINLESS STEEL
47	THRUST WASHER	25% CARBON FILLED PTFE (1)
48	SNAP RING	STAINLESS STEEL
49	STOPPER	STAINLESS STEEL
123	HANDLE BOLT	STAINLESS STEEL
124	SPRING & PIN	A313 & A276 TYPE 316
126	STOPPER PIN	STAINLESS STEEL

NOTE

(1) All valves have an anti-static thrust washer insuring positive conductivity between body and stem.

(2) Flexible graphite with stainless foil insert.

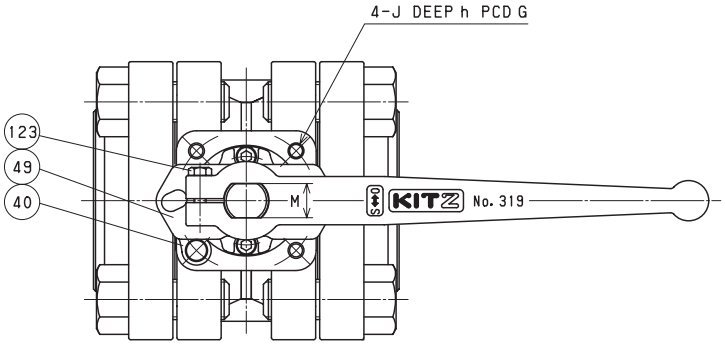

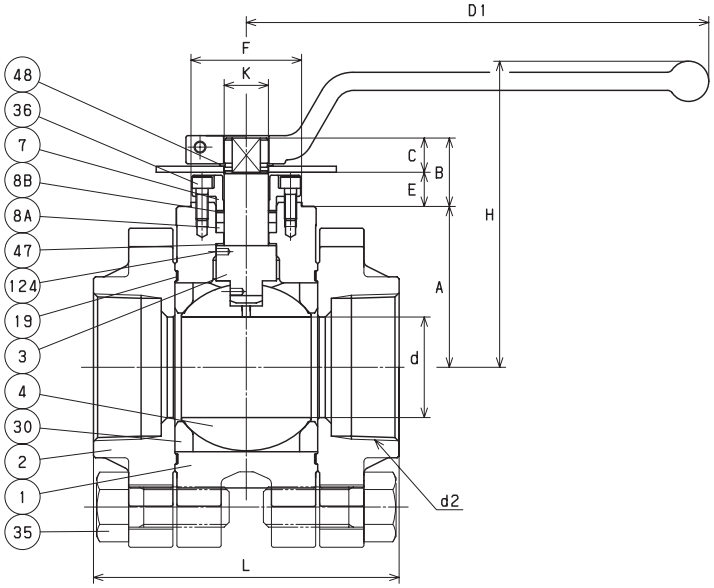

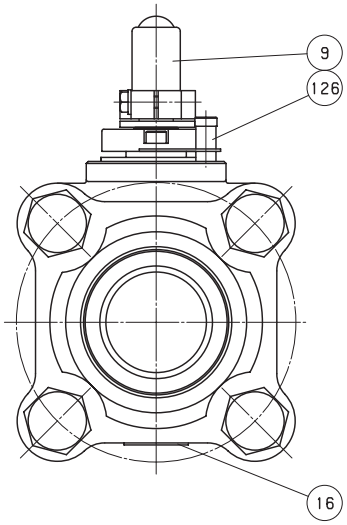

DIMENSIONS

Unit : inch

Nominal Size						Mounting Dimensions for Actuator										
in.	d	H	D1	L	d2	A	B	C	E	F	K	G	J	h	M	ISO 5211 Flange Type
2 1/2	1.97	5.98	9.06	5.98	NPT 2 1/2	3.150	1.339	0.669	0.669	2.165	0.866	2.756	5/16-18UNC	0.591	0.669	F07

AKUTKZM-FS
CODE NO. 129-LOH

MATERIAL LIST

No.	Name of Parts	Materials
1	BODY	A351 Gr. CF8M
3	STEM	A276 TYPE 316
4	BALL	A276 TYPE 316
7	GLAND	A276 TYPE 304
8	GLAND PACKING	FLEXIBLE GRAPHITE
9	HANDLE	A276 TYPE 430 (1)
10	NUT	A194 Gr. 8
16	WASHER	A276 TYPE 304 (SIZE 1/4, 3/8, 1 & OVER)
29	INSERT	A276 TYPE 316 or A351 Gr. CF8M
30	BALL SEAT	HYPATITE PTFE
34	NUT	A194 Gr. 8 (SIZE 1/2 & OVER)
47	THRUST WASHER	C/F PTFE
A	LATCH LOCK	A276 TYPE 430 (SIZE 1/2 & OVER)

NOTE

(1) Plastic covering.

(2) Valve rating 2000WOG (size 1/4 to 1), 1500WOG (size 1 1/4 to 2).

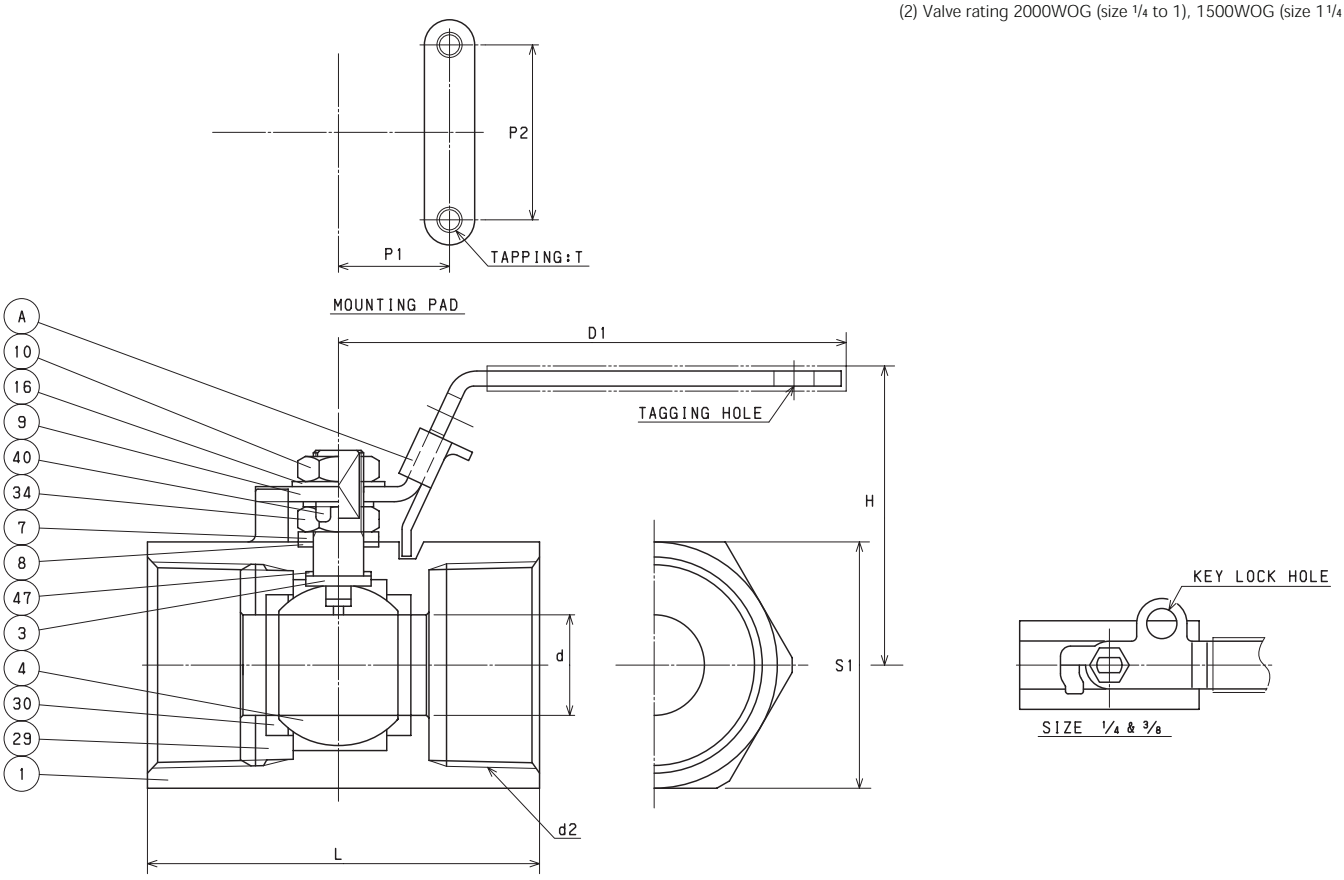

DIMENSIONS

Unit : inch

Nominal Size	d	H	D1	L	d2	S1	P1	P2	T
1/4	0.18	1.12	2.80	1.97	NPT 1/4	0.72	• •	• •	• •
3/8	0.27	1.16	3.23	2.05	NPT 3/8	0.87	• •	• •	• •
1/2	0.36	1.93	3.54	2.56	NPT 1/2	1.10	0.5	1.12	No.10-24UNC
3/4	0.49	2.05	3.54	2.76	NPT 3/4	1.34	0.57	1.37	No.10-24UNC
1	0.63	2.15	4.33	3.15	NPT 1	1.57	0.87	1.37	No.10-24UNC
1 1/4	0.79	2.34	4.33	3.74	NPT 1 1/4	1.97	1	1.5	1/4-20UNC
1 1/2	0.96	2.68	5.51	3.94	NPT 1 1/2	2.24	1	1.5	1/4-20UNC
2	1.26	2.89	5.51	4.49	NPT 2	2.72	1	1.5	1/4-20UNC

AKUTKZM-FSO
CODE NO. 129-LOH

MATERIAL LIST

No.	Name of Parts	Materials
1	BODY	A351 Gr. CF8M
3	STEM	A276 TYPE 316
4	BALL	A276 TYPE 316
7	GLAND	A276 TYPE 304
8	GLAND PACKING	FLEXIBLE GRAPHITE
9	HANDLE	A276 TYPE 430 (1)
10	NUT	A194 Gr. 8
16	WASHER	A276 TYPE 304 (SIZE 1/4, 3/8, 1 & OVER)
29	INSERT	A276 TYPE 316 or A351 Gr. CF8M
30	BALL SEAT	HYPATITE PTFE
34	NUT	A194 Gr. 8 (SIZE 1/2 & OVER)
47	THRUST WASHER	C/F PTFE
A	LATCH LOCK	A276 TYPE 430 (SIZE 1/2 & OVER)

NOTE

(1) Plastic covering.

(2) Valve rating 2000WOG (size 1/4 to 1), 1500WOG (size 1 1/4 to 2).

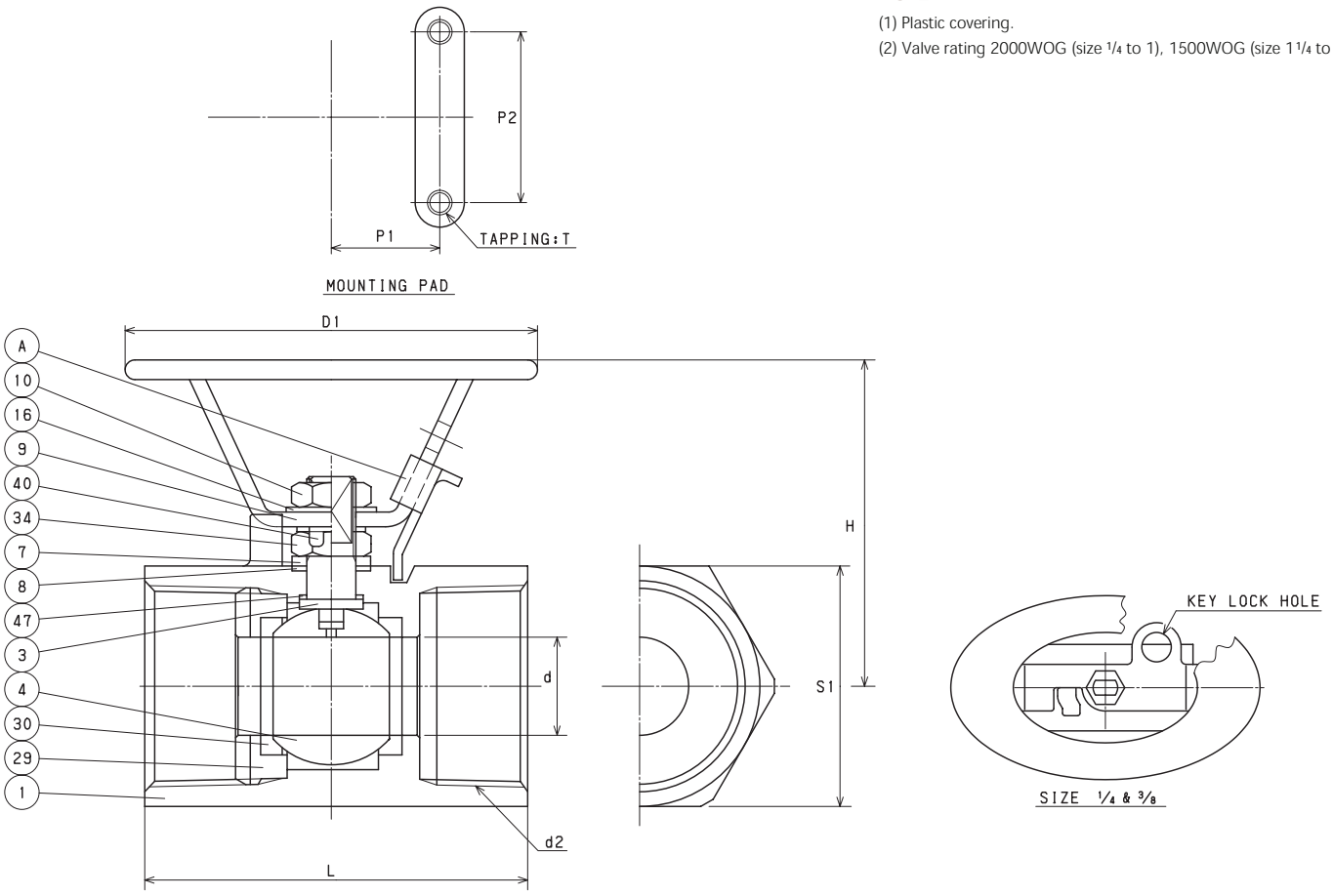

DIMENSIONS

Unit : inch

Nominal Size	d	H	D1	L	d2	S1	P1	P2	T
1/4	0.18	1.71	3.94	1.97	NPT 1/4	0.72	• •	• •	• •
3/8	0.27	1.87	3.94	2.05	NPT 3/8	0.87	• •	• •	• •
1/2	0.36	2.13	3.94	2.56	NPT 1/2	1.10	0.5	1.12	No.10-24UNC
3/4	0.49	2.24	3.94	2.76	NPT 3/4	1.34	0.57	1.37	No.10-24UNC
1	0.63	2.38	3.94	3.15	NPT 1	1.57	0.87	1.37	No.10-24UNC
1 1/4	0.79	2.58	3.94	3.74	NPT 1 1/4	1.97	1	1.5	1/4-20UNC
1 1/2	0.96	3.07	5.12	3.94	NPT 1 1/2	2.24	1	1.5	1/4-20UNC
2	1.26	3.29	5.12	4.49	NPT 2	2.72	1	1.5	1/4-20UNC

AKUTHZM
CODE NO. 227

MATERIAL LIST

No.	Name of Parts	Materials
1	BODY	A351 Gr. CF8M
2	BODY CAP	A351 Gr. CF8M
3	STEM	A276 TYPE 316
4	BALL	A276 TYPE 316
7	GLAND	A276 TYPE 304
8	GLAND PACKING	PTFE
9	HANDLE	A276 TYPE 430 (1)
10	HANDLE NUT	A194 Gr. 8
16	WASHER	A276 TYPE 304
19	GASKET	PTFE
30	BALL SEAT	HYPATITE PTFE
47	THRUST WASHER	G/F PTFE
A	LATCH LOCK	A276 TYPE 430

NOTE

(1) Plastic covering.
(2) BS 5351 Class 800 (size 1/4 to 1), KITZ standard (size 1 1/4 to 2).
(3) Valve rating 2000WOG (size 1/4 to 1), 1500WOG (size 1 1/4 to 2).

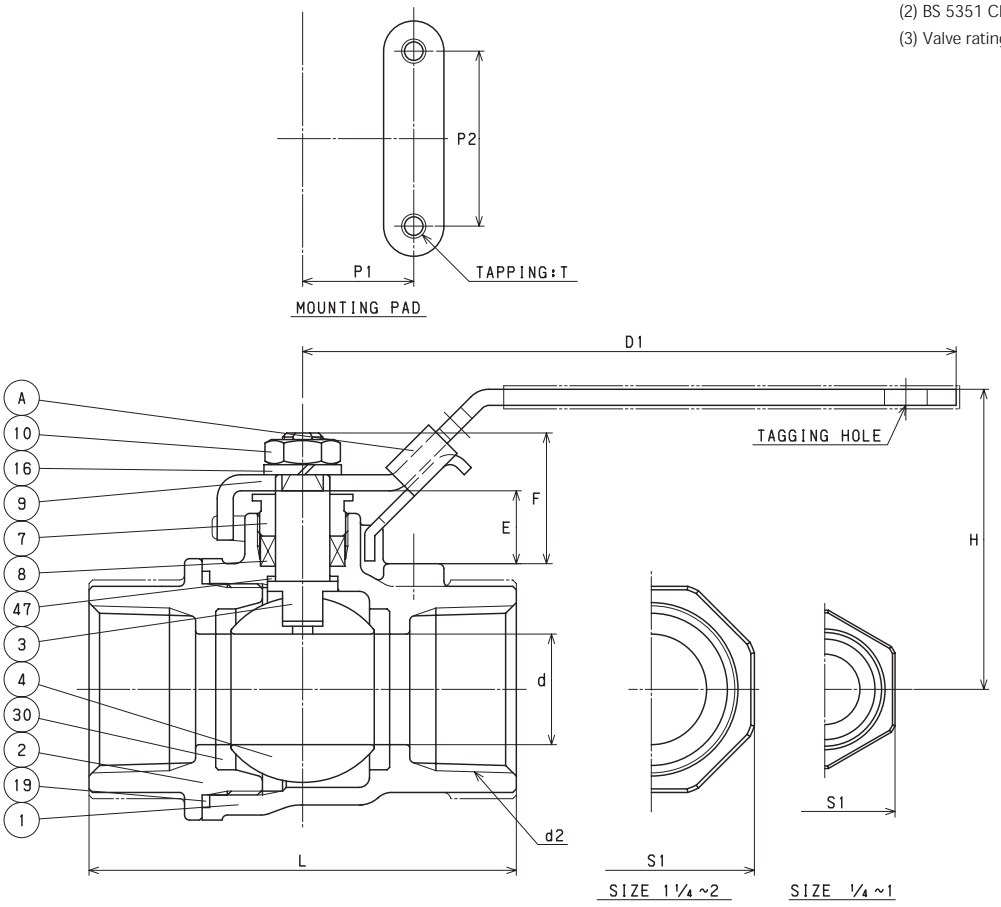

DIMENSIONS

Unit : inch

Nominal Size	d	H	D1	L	d2	S1	P1	P2	E	F	T
1/4	0.37	1.99	3.94	2.09	NPT 1/4	0.827	0.5	1.12	0.571	0.925	No.10-24UNC
3/8	0.37	1.99	3.94	2.09	NPT 3/8	0.945	0.5	1.12	0.571	0.925	No.10-24UNC
1/2	0.39	2.29	4.53	2.44	NPT 1/2	1.102	0.5	1.12	0.531	0.925	No.10-24UNC
3/4	0.59	2.47	4.53	2.83	NPT 3/4	1.378	0.87	1.37	0.551	1.004	No.10-24UNC
1	0.79	2.50	5.31	3.35	NPT 1	1.614	0.87	1.37	0.571	1.063	No.10-24UNC
1 1/4	0.98	2.66	5.31	3.70	NPT 1 1/4	2.047	0.93	1.5	0.531	1.024	1/4-20UNC
1 1/2	1.26	3.27	6.10	4.21	NPT 1 1/2	2.323	0.93	1.5	0.669	1.240	1/4-20UNC
2	1.57	3.58	7.48	4.72	NPT 2	2.835	0.93	1.5	0.591	1.240	1/4-20UNC

AKUTHZM-O
CODE NO. 227-LOH

MATERIAL LIST

No.	Name of Parts	Materials
1	BODY	A351 Gr. CF8M
2	BODY CAP	A351 Gr. CF8M
3	STEM	A276 TYPE 316
4	BALL	A276 TYPE 316
7	GLAND	A276 TYPE 304
8	GLAND PACKING	PTFE
9	HANDLE	A276 TYPE 430 (1)
10	HANDLE NUT	A194 Gr. 8
16	WASHER	A276 TYPE 304
19	GASKET	PTFE
30	BALL SEAT	HYPATITE PTFE
47	THRUST WASHER	G/F PTFE
A	LATCH LOCK	A276 TYPE 430

NOTE

(1) Plastic covering.
(2) BS 5351 Class 800 (size 1/4 to 1), KITZ standard (size 1 1/4 to 2).
(3) Valve rating 2000WOG (size 1/4 to 1), 1500WOG (size 1 1/4 to 2).

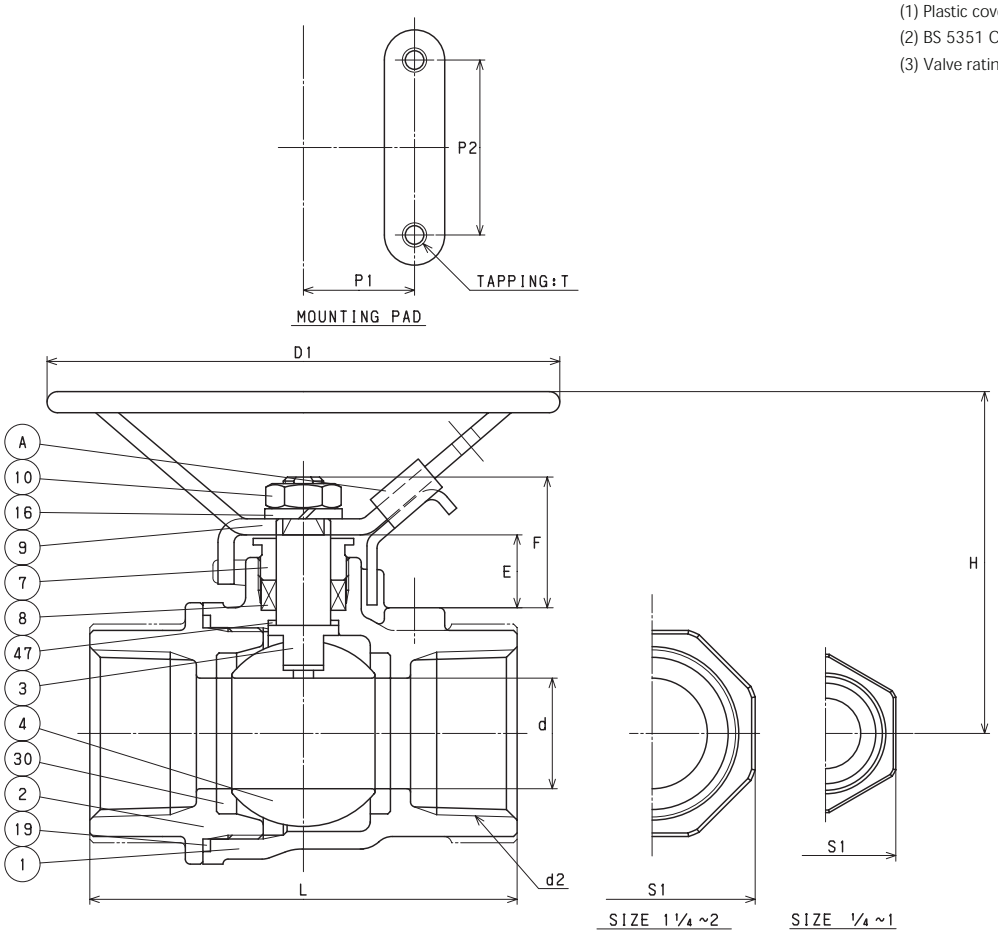

DIMENSIONS

Unit : inch

Nominal Size	d	H	D1	L	d2	S1	P1	P2	E	F	T
1/4	0.37	2.42	3.94	2.09	NPT 1/4	0.827	0.5	1.12	0.571	0.925	No.10-24UNC
3/8	0.37	2.42	3.94	2.09	NPT 3/8	0.945	0.5	1.12	0.571	0.925	No.10-24UNC
1/2	0.39	2.46	3.94	2.44	NPT 1/2	1.102	0.5	1.12	0.531	0.925	No.10-24UNC
3/4	0.59	2.64	3.94	2.83	NPT 3/4	1.378	0.87	1.37	0.551	1.004	No.10-24UNC
1	0.79	2.70	3.94	3.35	NPT 1	1.614	0.87	1.37	0.571	1.063	No.10-24UNC
1 1/4	0.98	2.85	3.94	3.70	NPT 1 1/4	2.047	0.93	1.5	0.531	1.024	1/4-20UNC
1 1/2	1.26	3.66	5.12	4.21	NPT 1 1/2	2.323	0.93	1.5	0.669	1.240	1/4-20UNC
2	1.57	3.98	7.09	4.72	NPT 2	2.835	0.93	1.5	0.591	1.240	1/4-20UNC

AKUTHZM-FS
CODE NO. 229

MATERIAL LIST

No.	Name of Parts	Materials
1	BODY	A351 Gr. CF8M
2	BODY CAP	A351 Gr. CF8M
3	STEM	A276 TYPE 316
4	BALL	A276 TYPE 316
7	GLAND	A276 TYPE 304
8	GLAND PACKING	FLEXIBLE GRAPHITE
9	HANDLE	A276 TYPE 430 (1)
10	HANDLE NUT	A194 Gr. 8
16	WASHER	A276 TYPE 304
19	GASKET	FLEXIBLE GRAPHITE
30	BALL SEAT	HYPATITE PTFE
47	THRUST WASHER	G/F PTFE
A	LATCH LOCK	A276 TYPE 430

NOTE

(1) Plastic covering.
(3) BS 5351 Class 800 (size 1/4 to 1), KITZ standard (size 1 1/4 to 2).
(4) Valve rating 2000WOG (size 1/4 to 1), 1500WOG (size 1 1/4 to 2).

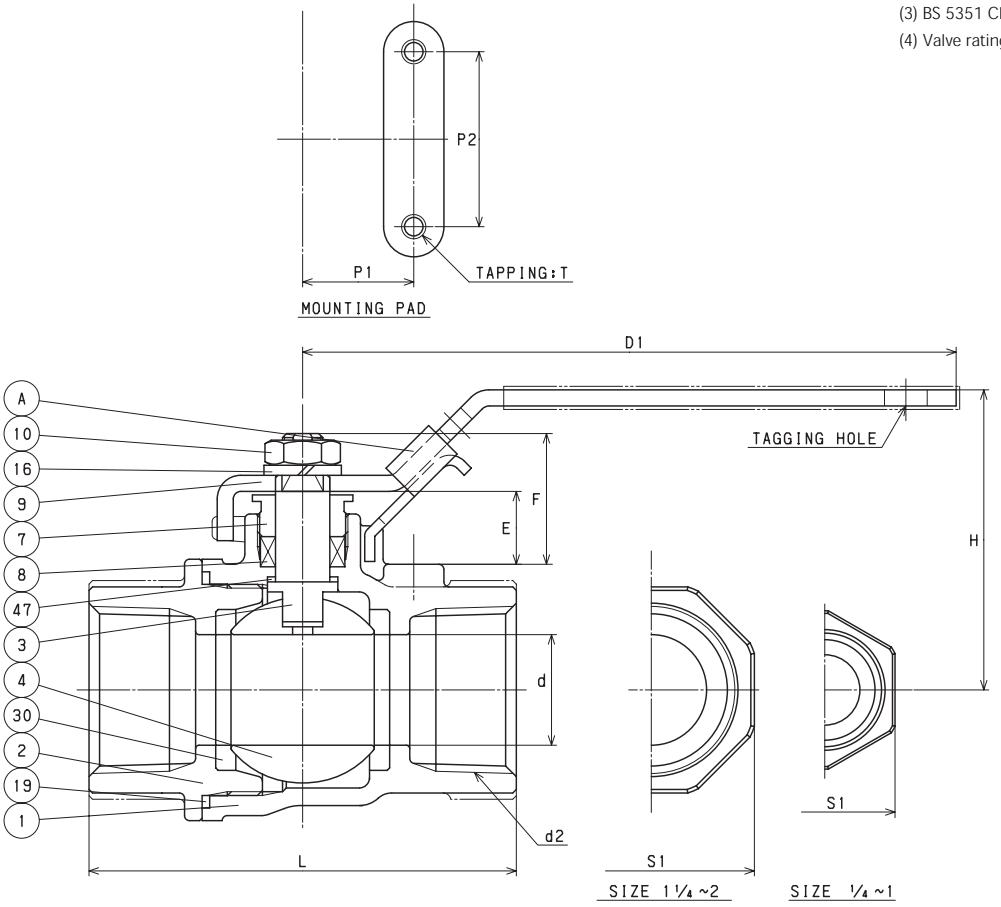

DIMENSIONS

Unit : inch

Nominal Size	d	H	D1	L	d2	S1	P1	P2	E	F	T
1/4	0.37	1.99	3.94	2.09	NPT 1/4	0.827	0.5	1.12	0.571	0.925	No.10-24UNC
3/8	0.37	1.99	3.94	2.09	NPT 3/8	0.945	0.5	1.12	0.571	0.925	No.10-24UNC
1/2	0.39	2.29	4.53	2.44	NPT 1/2	1.102	0.5	1.12	0.531	0.925	No.10-24UNC
3/4	0.59	2.47	4.53	2.83	NPT 3/4	1.378	0.87	1.37	0.551	1.004	No.10-24UNC
1	0.79	2.50	5.31	3.35	NPT 1	1.614	0.87	1.37	0.571	1.063	No.10-24UNC
1 1/4	0.98	2.66	5.31	3.70	NPT 1 1/4	2.047	0.93	1.5	0.531	1.024	1/4-20UNC
1 1/2	1.26	3.27	6.10	4.21	NPT 1 1/2	2.323	0.93	1.5	0.669	1.240	1/4-20UNC
2	1.57	3.58	7.48	4.72	NPT 2	2.835	0.93	1.5	0.591	1.240	1/4-20UNC

AKUTHZM-FSO
CODE NO. 229-LOH

MATERIAL LIST

No.	Name of Parts	Materials
1	BODY	A351 Gr. CF8M
2	BODY CAP	A351 Gr. CF8M
3	STEM	A276 TYPE 316
4	BALL	A276 TYPE 316
7	GLAND	A276 TYPE 304
8	GLAND PACKING	FLEXIBLE GRAPHITE
9	HANDLE	A276 TYPE 430 (1)
10	HANDLE NUT	A194 Gr. 8
16	WASHER	A276 TYPE 304
19	GASKET	FLEXIBLE GRAPHITE
30	BALL SEAT	HYPATITE PTFE
47	THRUST WASHER	G/F PTFE
A	LATCH LOCK	A276 TYPE 430

NOTE

(1) Plastic covering.
(2) BS 5351 Class 800 (size 1/4 to 1), KITZ standard (size 1 1/4 to 2).
(3) Valve rating 2000WOG (size 1/4 to 1), 1500WOG (size 1 1/4 to 2).

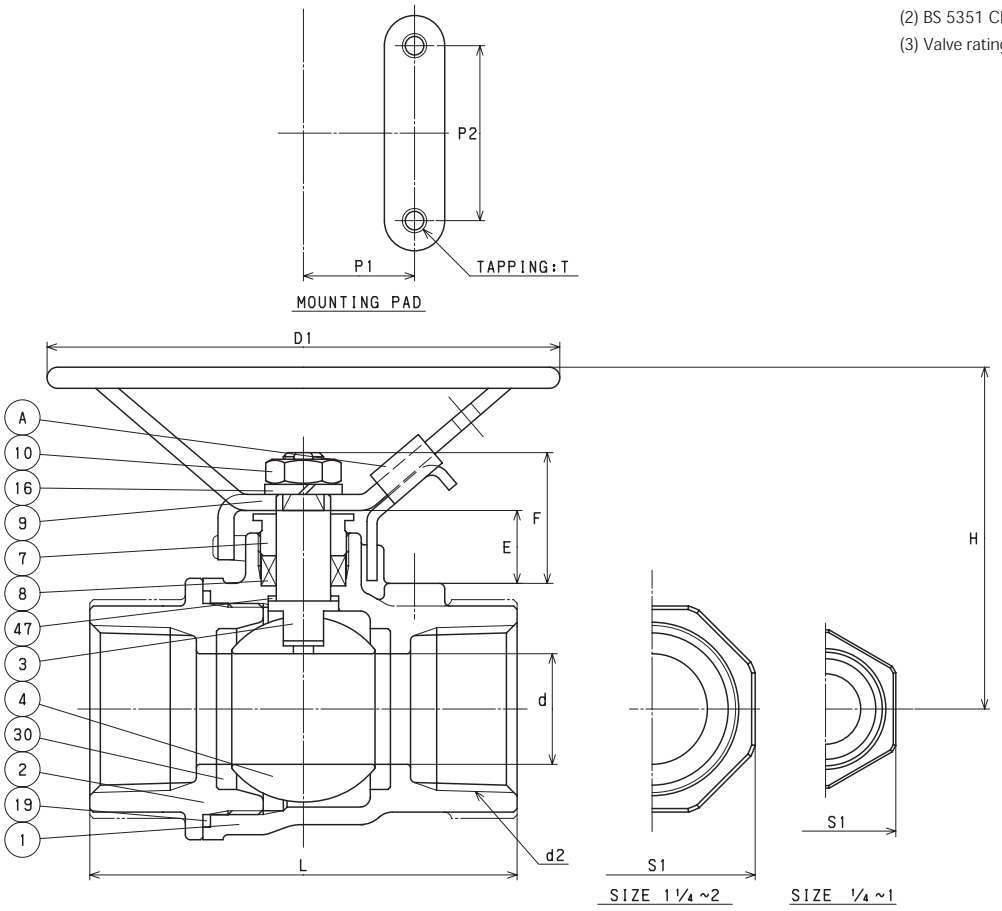

DIMENSIONS

Unit : inch

Nominal Size	d	H	D1	L	d2	S1	P1	P2	E	F	T
1/4	0.37	2.42	3.94	2.09	NPT 1/4	0.827	0.5	1.12	0.571	0.925	No.10-24UNC
3/8	0.37	2.42	3.94	2.09	NPT 3/8	0.945	0.5	1.12	0.571	0.925	No.10-24UNC
1/2	0.39	2.46	3.94	2.44	NPT 1/2	1.102	0.5	1.12	0.531	0.925	No.10-24UNC
3/4	0.59	2.64	3.94	2.83	NPT 3/4	1.378	0.87	1.37	0.551	1.004	No.10-24UNC
1	0.79	2.70	3.94	3.35	NPT 1	1.614	0.87	1.37	0.571	1.063	No.10-24UNC
1 1/4	0.98	2.85	3.94	3.70	NPT 1 1/4	2.047	0.93	1.5	0.531	1.024	1/4-20UNC
1 1/2	1.26	3.66	5.12	4.21	NPT 1 1/2	2.323	0.93	1.5	0.669	1.240	1/4-20UNC
2	1.57	3.98	7.09	4.72	NPT 2	2.835	0.93	1.5	0.591	1.240	1/4-20UNC

AKUTHWZM
CODE NO. 247

MATERIAL LIST

No.	Name of Parts	Materials
1	BODY	A351 Gr. CF8M
2	BODY CAP	A351 Gr. CF8M
3	STEM	A276 TYPE 316
4	BALL	A276 TYPE 316
7	GLAND	A276 TYPE 304
8	GLAND PACKING	PTFE
9	HANDLE	A276 TYPE 304 (1)
10	HANDLE NUT	A194 Gr. 8
16	WASHER	A276 TYPE 304 (SIZE 1/2 & OVER)
30	BALL SEAT	HYPATITE PTFE
47	THRUST WASHER	G/F PTFE
A	LATCH LOCK	A276 TYPE 304

NOTE

(1) Plastic covering.

(2) BS 5351 Class 800 (size 1/4 to 1), KITZ standard (size 1 1/4 to 2).

(3) Valve rating 2000WOG (size 1/4 to 1), 1500WOG (size 1 1/4 to 2).

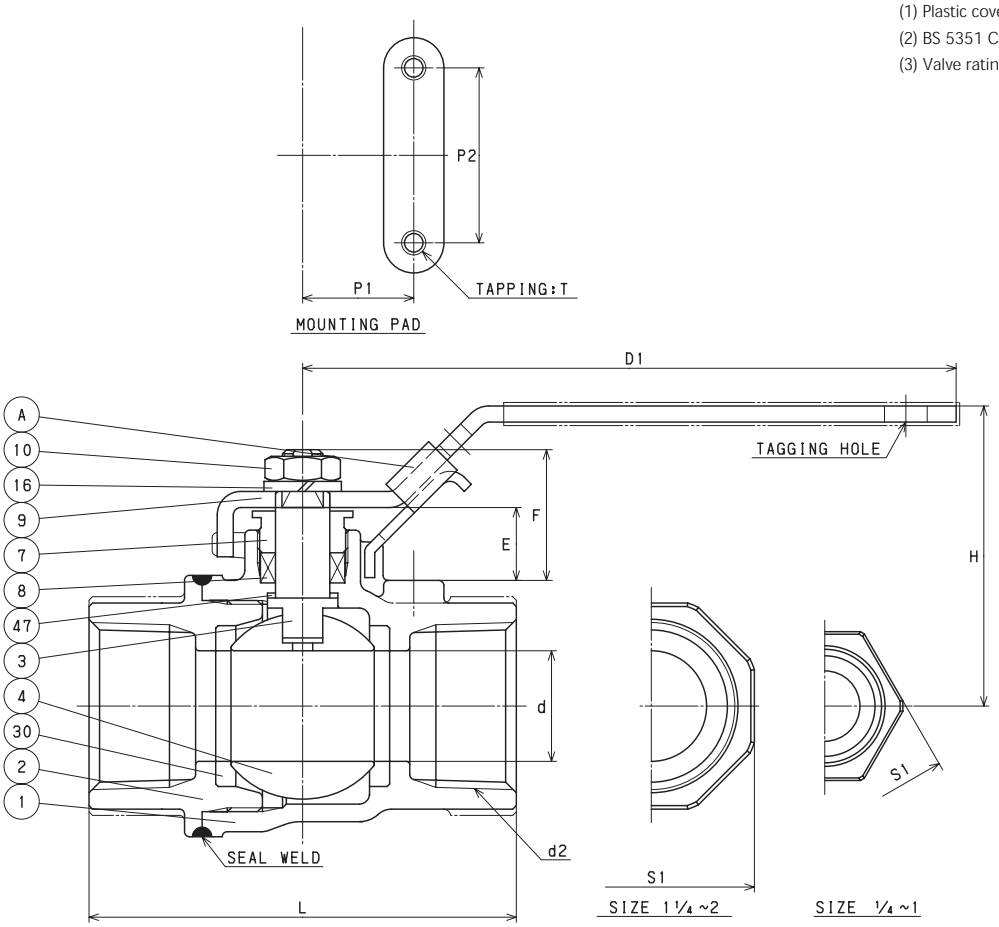

DIMENSIONS

Unit : inch

Nominal Size	d	H	D1	L	d2	S1	P1	P2	E	F	T
1/4	0.38	1.97	3.94	2.08	NPT 1/4	0.82	0.5	1.12	0.394	0.728	No.10-24UNC
3/8	0.46	1.97	3.94	2.08	NPT 3/8	0.94	0.5	1.12	0.425	0.760	No.10-24UNC
1/2	0.50	2.30	4.53	2.40	NPT 1/2	1.14	0.5	1.12	0.524	0.957	No.10-24UNC
3/4	0.59	2.42	4.53	2.71	NPT 3/4	1.38	0.87	1.37	0.496	0.929	No.10-24UNC
1	0.78	2.49	5.31	3.25	NPT 1	1.69	0.87	1.37	0.618	1.189	No.10-24UNC
1 1/4	1.00	2.65	5.31	3.54	NPT 1 1/4	2.09	0.93	1.5	0.614	1.185	1/4-20UNC
1 1/2	1.26	3.40	6.14	4.13	NPT 1 1/2	2.32	0.93	1.5	0.858	1.449	1/4-20UNC
2	1.50	3.64	7.48	4.61	NPT 2	2.83	0.93	1.5	0.831	1.421	1/4-20UNC

AKUTHWZM-O
CODE NO. 247-LOH

MATERIAL LIST

No.	Name of Parts	Materials
1	BODY	A351 Gr. CF8M
2	BODY CAP	A351 Gr. CF8M
3	STEM	A276 TYPE 316
4	BALL	A276 TYPE 316
7	GLAND	A276 TYPE 304
8	GLAND PACKING	PTFE
9	HANDLE	A276 TYPE 304 (1)
10	HANDLE NUT	A194 Gr. 8
16	WASHER	A276 TYPE 304 (SIZE 1/2 & OVER)
30	BALL SEAT	HYPATITE PTFE
47	THRUST WASHER	G/F PTFE
A	LATCH LOCK	A276 TYPE 304

NOTE

(1) Plastic covering.
(2) BS 5351 Class 800 (size 1/4 to 1), KITZ standard (size 1 1/4 to 2).
(3) Valve rating 2000WOG (size 1/4 to 1), 1500WOG (size 1 1/4 to 2).

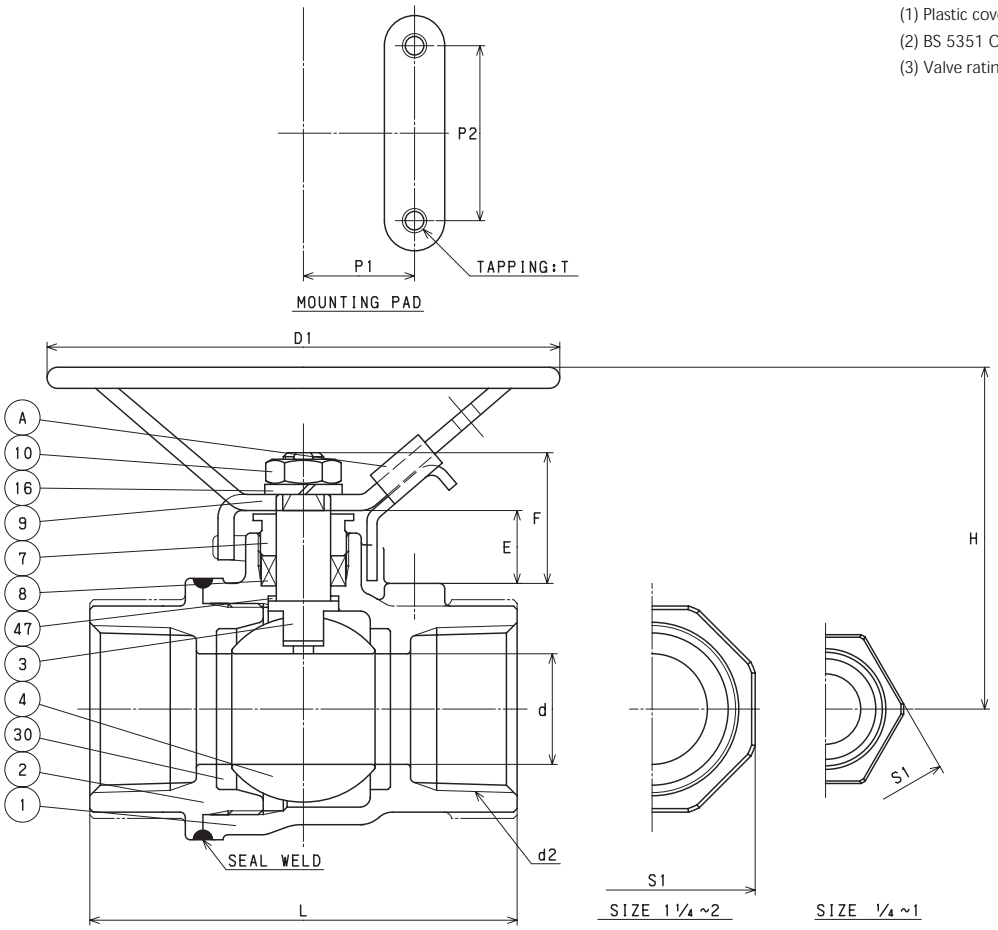

DIMENSIONS

Unit : inch

Nominal Size	d	H	D1	L	d2	S1	P1	P2	E	F	T
1/4	0.38	2.24	3.94	2.08	NPT 1/4	0.82	0.5	1.12	0.394	0.728	No.10-24UNC
3/8	0.46	2.24	3.94	2.08	NPT 3/8	0.94	0.5	1.12	0.425	0.760	No.10-24UNC
1/2	0.50	2.45	3.94	2.40	NPT 1/2	1.14	0.5	1.12	0.524	0.957	No.10-24UNC
3/4	0.59	2.51	3.94	2.71	NPT 3/4	1.38	0.87	1.37	0.496	0.929	No.10-24UNC
1	0.78	2.63	3.94	3.25	NPT 1	1.69	0.87	1.37	0.618	1.189	No.10-24UNC
1 1/4	1.00	2.81	3.94	3.54	NPT 1 1/4	2.09	0.93	1.5	0.614	1.185	1/4-20UNC
1 1/2	1.26	3.81	5.12	4.13	NPT 1 1/2	2.32	0.93	1.5	0.858	1.449	1/4-20UNC
2	1.50	4.03	5.12	4.61	NPT 2	2.83	0.93	1.5	0.831	1.421	1/4-20UNC

AKUTHWZM-FS
CODE NO. 249

MATERIAL LIST

No.	Name of Parts	Materials
1	BODY	A351 Gr. CF8M
2	BODY CAP	A351 Gr. CF8M
3	STEM	A276 TYPE 316
4	BALL	A276 TYPE 316
7	GLAND	A276 TYPE 304
8	GLAND PACKING	FLEXIBLE GRAPHITE
9	HANDLE	A276 TYPE 304 (1)
10	HANDLE NUT	A194 Gr. 8
16	WASHER	A276 TYPE 304 (SIZE 1/2 & OVER)
30	BALL SEAT	HYPATITE PTFE
47	THRUST WASHER	G/F PTFE
A	LATCH LOCK	A276 TYPE 304

NOTE

(1) Plastic covering.

(2) BS 5351 Class 800 (size 1/4 to 1), KITZ standard (size 1 1/4 to 2).

(3) Valve rating 2000WOG (size 1/4 to 1), 1500WOG (size 1 1/4 to 2).

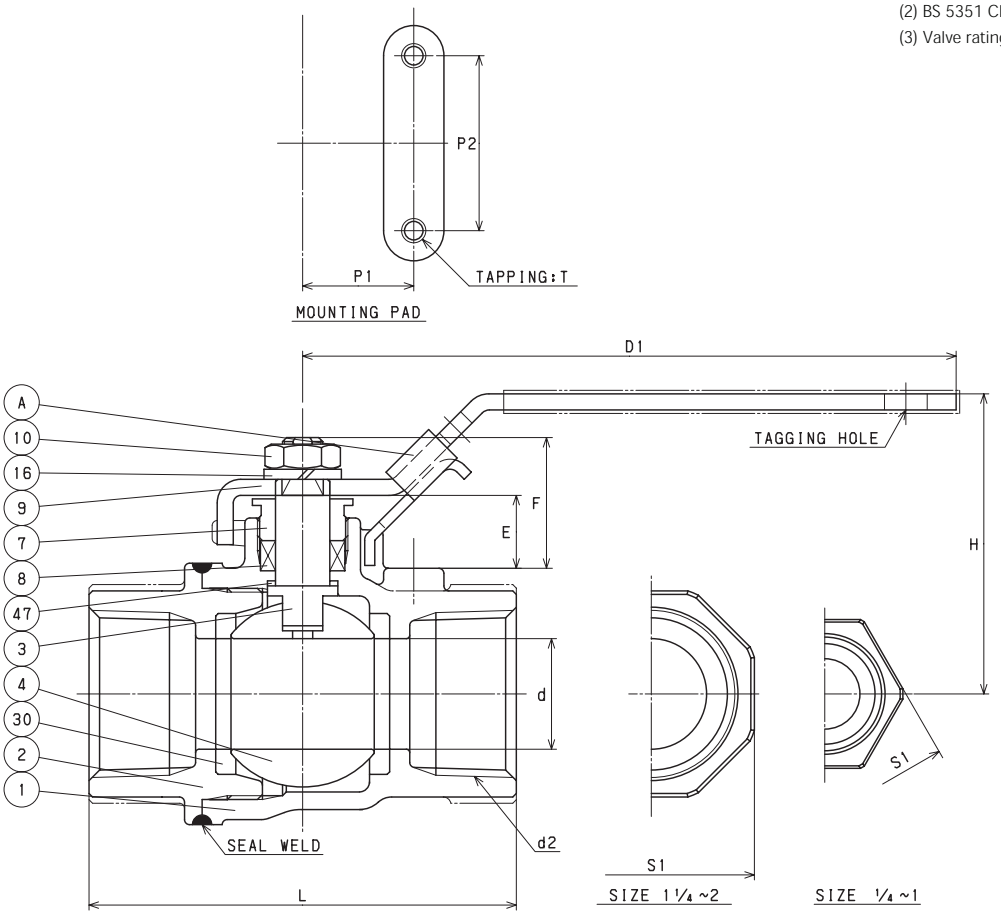

DIMENSIONS

Unit : inch

Nominal Size	d	H	D1	L	d2	S1	P1	P2	E	F	T
1/4	0.38	1.97	3.94	2.08	NPT 1/4	0.82	0.5	1.12	0.394	0.728	No.10-24UNC
3/8	0.46	1.97	3.94	2.08	NPT 3/8	0.94	0.5	1.12	0.425	0.760	No.10-24UNC
1/2	0.50	2.30	4.53	2.40	NPT 1/2	1.14	0.5	1.12	0.524	0.957	No.10-24UNC
3/4	0.59	2.42	4.53	2.71	NPT 3/4	1.38	0.87	1.37	0.496	0.929	No.10-24UNC
1	0.78	2.49	5.31	3.25	NPT 1	1.69	0.87	1.37	0.618	1.189	No.10-24UNC
1 1/4	1.00	2.65	5.31	3.54	NPT 1 1/4	2.09	0.93	1.5	0.614	1.185	1/4-20UNC
1 1/2	1.26	3.40	6.14	4.13	NPT 1 1/2	2.32	0.93	1.5	0.858	1.449	1/4-20UNC
2	1.50	3.64	7.48	4.61	NPT 2	2.83	0.93	1.5	0.831	1.421	1/4-20UNC

AKUTHWZM-FSO
CODE NO. 249-LOH

MATERIAL LIST

No.	Name of Parts	Materials
1	BODY	A351 Gr. CF8M
2	BODY CAP	A351 Gr. CF8M
3	STEM	A276 TYPE 316
4	BALL	A276 TYPE 316
7	GLAND	A276 TYPE 304
8	GLAND PACKING	FLEXIBLE GRAPHITE
9	HANDLE	A276 TYPE 304 (1)
10	HANDLE NUT	A194 Gr. 8
16	WASHER	A276 TYPE 304 (SIZE 1/2 & OVER)
30	BALL SEAT	HYPATITE PTFE
47	THRUST WASHER	G/F PTFE
A	LATCH LOCK	A276 TYPE 304

NOTE

(1) Plastic covering.

(2) BS 5351 Class 800 (size 1/4 to 1), KITZ standard (size 1 1/4 to 2).

(3) Valve rating 2000WOG (size 1/4 to 1), 1500WOG (size 1 1/4 to 2).

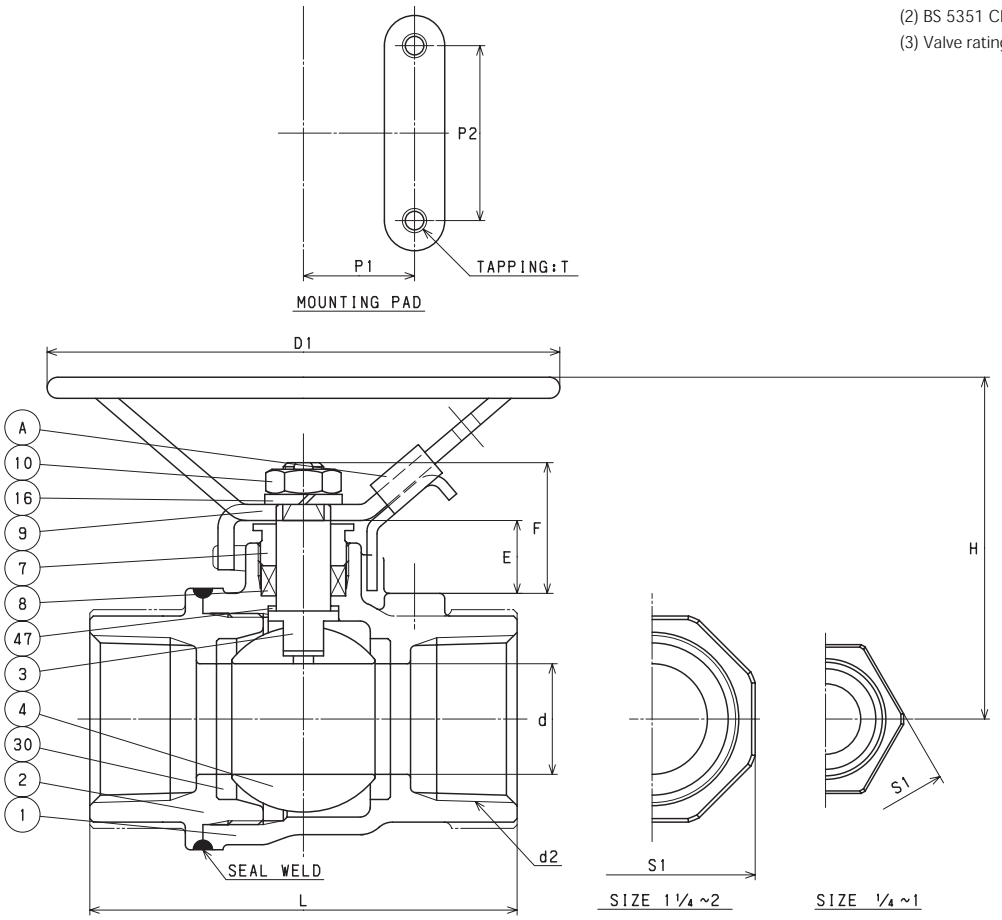

DIMENSIONS

Unit : inch

Nominal Size	d	H	D1	L	d2	S1	P1	P2	E	F	T
1/4	0.38	2.24	3.94	2.08	NPT 1/4	0.82	0.5	1.12	0.394	0.728	No.10-24UNC
3/8	0.46	2.24	3.94	2.08	NPT 3/8	0.94	0.5	1.12	0.425	0.760	No.10-24UNC
1/2	0.50	2.45	3.94	2.40	NPT 1/2	1.14	0.5	1.12	0.524	0.957	No.10-24UNC
3/4	0.59	2.51	3.94	2.71	NPT 3/4	1.38	0.87	1.37	0.496	0.929	No.10-24UNC
1	0.78	2.63	3.94	3.25	NPT 1	1.69	0.87	1.37	0.618	1.189	No.10-24UNC
1 1/4	1.00	2.81	3.94	3.54	NPT 1 1/4	2.09	0.93	1.5	0.614	1.185	1/4-20UNC
1 1/2	1.26	3.81	5.12	4.13	NPT 1 1/2	2.32	0.93	1.5	0.858	1.449	1/4-20UNC
2	1.50	4.03	5.12	4.61	NPT 2	2.83	0.93	1.5	0.831	1.421	1/4-20UNC

AKUTKM
CODE NO. 52

MATERIAL LIST

No.	Name of Parts	Materials
1	BODY	A351 Gr. CF8M
3	STEM	A276 TYPE 316
4	BALL	A276 TYPE 316
7	GLAND	A276 TYPE 316
8	GLAND PACKING	G/F + PTFE
9	HANDLE	A276 TYPE 430 (1)
10	SELF LOCKING NUT	A276 TYPE 304
16	SPRING WASHER	A276 TYPE 304
29	INSERT	A276 TYPE 316 or A351 Gr. CF8M
30	BALL SEAT	G/F + PTFE
43	SPRING	A167 TYPE 304
47	THRUST WASHER	REINFORCED PTFE

NOTE

(1) Plastic covering.

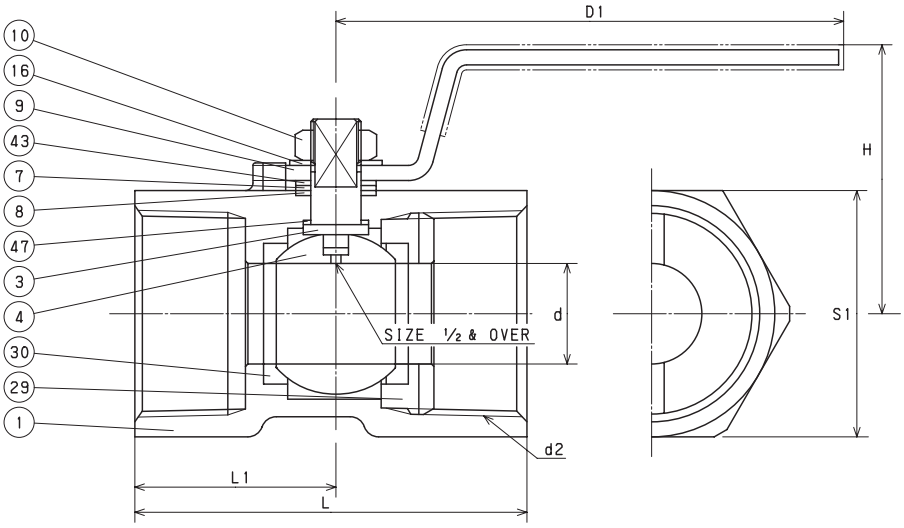

DIMENSIONS

Unit : inch

Nominal Size	d	H	D1	L	d2	S1	L1
1/4	0.18	1.22	2.36	1.54	NPT 1/4	0.67	0.75
3/8	0.27	1.42	2.76	1.73	NPT 3/8	0.83	0.83
1/2	0.36	1.61	3.35	2.22	NPT 1/2	0.99	1.08
3/4	0.49	1.73	3.35	2.32	NPT 3/4	1.26	1.18
1	0.63	1.89	3.94	2.80	NPT 1	1.50	1.42
1 1/4	0.79	2.13	3.94	3.07	NPT 1 1/4	1.93	1.57
1 1/2	0.96	2.56	4.92	3.27	NPT 1 1/2	2.09	1.67
2	1.26	2.83	4.92	3.94	NPT 2	2.56	2.01

AKUTHM
CODE NO. 53

MATERIAL LIST

No.	Name of Parts	Materials
1	BODY	A351 Gr. CF8M
2	BODY CAP	A351 Gr. CF8M
3	STEM	A276 TYPE 316 (2)
4	BALL	A276 TYPE 316 or A351 Gr. CF8M
7	GLAND	A276 TYPE 316
8	GLAND PACKING	PTFE
9	HANDLE	A276 TYPE 430 (1)
10	WHEEL NUT	A194 Gr. 8
16	WASHER	A276 TYPE 304 (SIZE 3/4 & OVER)
19	GASKET	PTFE
30	BALL SEAT	PTFE
34	GLAND NUT	STAINLESS STEEL
43	CONED DISC SPRING	STAINLESS STEEL
47	THRUST WASHER	G/F PTFE

NOTE

(1) Plastic covering.

(2) Cr plating.

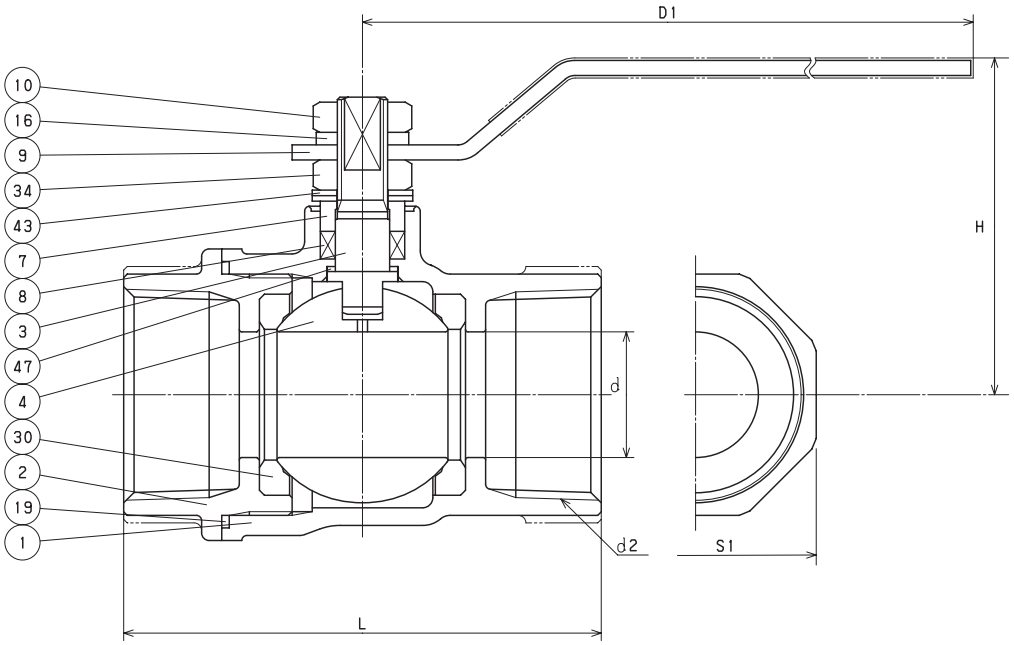

DIMENSIONS

Unit : inch

Nominal Size	d	H	D1	L	d2	S1
1/2	0.39	1.85	3.94	2.36	NPT 1/2	1.03
3/4	0.59	2.09	3.94	2.76	NPT 3/4	1.26
1	0.79	2.48	5.12	3.15	NPT 1	1.54
1 1/4	0.98	2.64	5.12	3.74	NPT 1 1/4	1.89
1 1/2	1.26	3.07	5.91	4.25	NPT 1 1/2	2.13
2	1.57	3.31	5.91	4.88	NPT 2	2.72

AKU3TFZM-O
CODE NO. 327F-LOH

MATERIAL LIST

No.	Name of Parts	Materials
1	BODY	A351 Gr. CF8M
2	CAP	A351 Gr. CF8M
3	STEM	A276 TYPE 316
4	BALL	A276 TYPE 316 or A351 Gr. CF8M
7	GLAND	A276 TYPE 316
8	GLAND PACKING	PTFE
9	HANDLE	A276 TYPE 430 (1)
10	HANDLE NUT	A194 Gr. 8
16A	WASHER	STAINLESS STEEL
16B	NAME PLATE	STAINLESS STEEL
19	GASKET	PTFE
30	BALL SEAT	HYPATITE PTFE
34	GLAND NUT	A194 Gr. 8
35	CAP BOLT	A193 Gr. B8
40	LOCK PLATE	STAINLESS STEEL
43	CONED DISC SPRING	STAINLESS STEEL
47	THRUST WASHER	25% CARBON FILLED PTFE (2)
126	STOPPER PIN	A276 TYPE 304
A	LATCH LOCK	STAINLESS STEEL

NOTE

(1) Plastic covering.

(2) All valves have an anti-static thrust washer insuring positive conductivity between body and stem.

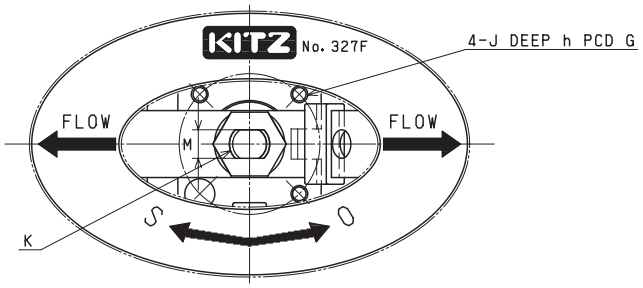

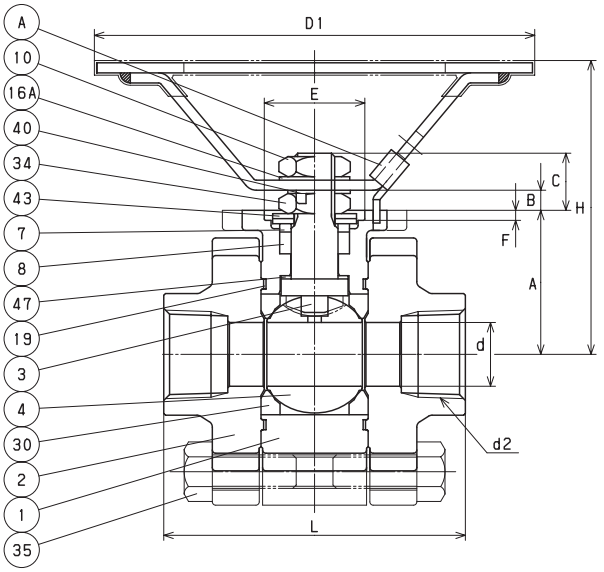

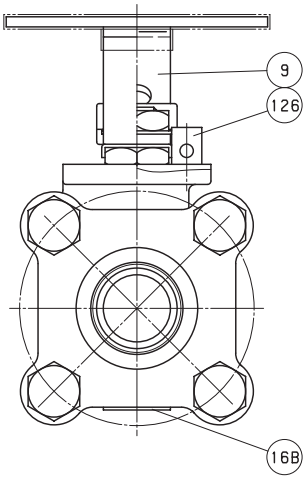

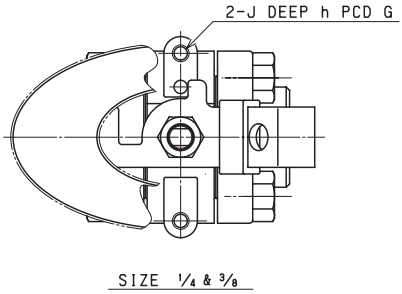

DIMENSIONS

Unit : inch

Nominal Size						Mounting Dimensions for Actuator										
in.	d	H	D1	L	d2	A	B	C	E	F	G	J	h	K	M	ISO 5211 Flange Type
1/4	0.39	2.48	3.94	2.48	NPT 1/4	1.043	0.079	0.413	• •	• •	1.969	1/4-20UNC	0.275	M8	0.197	• •
3/8	0.39	2.48	3.94	2.48	NPT 3/8	1.043	0.079	0.413	• •	• •	1.969	1/4-20UNC	0.275	M8	0.197	• •
1/2	0.55	3.07	5.12	2.80	NPT 1/2	1.378	0.169	0.559	0.984	0.118	1.417	1/4-20UNC	0.197	M10	0.236	F03
3/4	0.75	3.43	5.12	3.54	NPT 3/4	1.693	0.197	0.669	1.181	0.118	1.654	1/4-20UNC	0.315	M12	0.335	F04

AKU3TFZM
CODE NO. 327F

MATERIAL LIST

No.	Name of Parts	Materials
1	BODY	A351 Gr. CF8M
2	CAP	A351 Gr. CF8M
3	STEM	A276 TYPE 316
4	BALL	A276 TYPE 316 or A351 Gr. CF8M
7	GLAND	A276 TYPE 316
8	GLAND PACKING	PTFE
9	HANDLE	A276 TYPE 430 (1)
10	HANDLE NUT	A194 Gr. 8
16A	WASHER	STAINLESS STEEL
16B	NAME PLATE	STAINLESS STEEL
19	GASKET	PTFE
30	BALL SEAT	HYPATITE PTFE
34	GLAND NUT	A194 Gr .8
35	CAP BOLT	A193 Gr. B8
40	LOCK PLATE	STAINLESS STEEL
43	CONED DISC SPRING	STAINLESS STEEL
47	THRUST WASHER	25% CARBON FILLED PTFE (2)
126	STOPPER PIN	A276 TYPE 304
A	LATCH LOCK	STAINLESS STEEL

NOTE

(1) Plastic covering.

(2) All valves have an anti-static thrust washer insuring positive conductivity between body and stem.

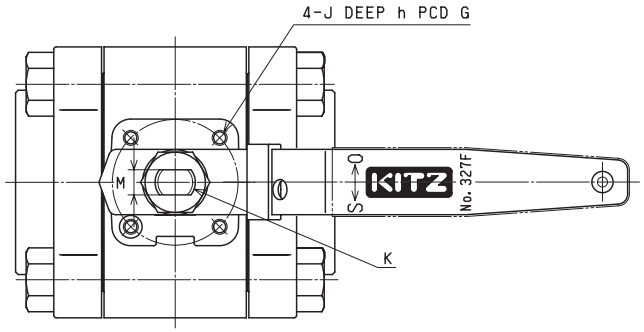

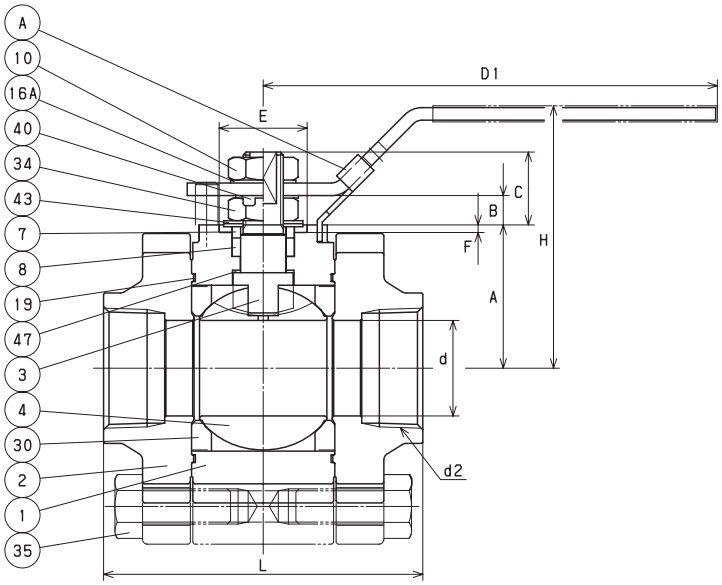

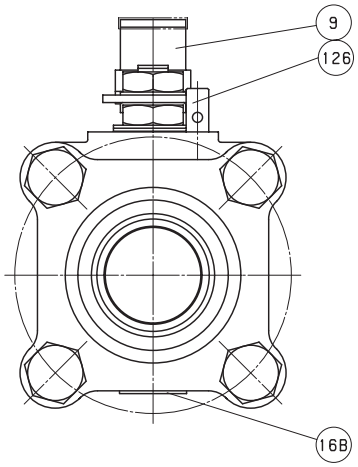

DIMENSIONS

Unit : inch

Nominal Size						Mounting Dimensions for Actuator										
in.	d	H	D1	L	d2	A	B	C	E	F	G	J	h	K	M	ISO 5211 Flange Type
1	0.94	3.23	5.91	4.06	NPT 1	1.732	0.531	1.083	1.181	0.118	1.654	1/4-20UNC	0.315	M14	0.394	F04
1 1/4	1.18	3.46	5.91	4.33	NPT 1 1/4	1.949	0.531	1.071	1.181	0.118	1.654	1/4-20UNC	0.315	M14	0.394	F04
1 1/2	1.50	4.09	7.09	5.00	NPT 1 1/2	2.244	0.461	1.142	1.378	0.118	1.969	1/4-20UNC	0.394	M16	0.394	F05

AKU3TFZM
CODE NO. 327F

MATERIAL LIST

No.	Name of Parts	Materials
1	BODY	A351 Gr. CF8M
2	CAP	A351 Gr. CF8M
3	STEM	A276 TYPE 316
4	BALL	A351 Gr. CF8M
7	GLAND	A351 Gr. CF8
8	GLAND PACKING	PTFE
9	HANDLE	DUCTILE IRON
16	HANDLE PLATE	STAINLESS STEEL
19	GASKET	PTFE
30	BALL SEAT	HYPATITE PTFE
35	CAP BOLT	A193 Gr. B8
36	GLAND BOLT	A193 Gr. B8
40	KEY LOCK PLATE	STAINLESS STEEL
47	THRUST WASHER	25% CARBON FILLED PTFE (1)
48	SNAP RING	STAINLESS STEEL
49	STOPPER	STAINLESS STEEL
123	HANDLE BOLT	STAINLESS STEEL
124	SPRING & PIN	A313 & A276 TYPE 316
126	STOPPER PIN	STAINLESS STEEL

NOTE

(1) All valves have an anti-static thrust washer insuring positive conductivity between body and stem.

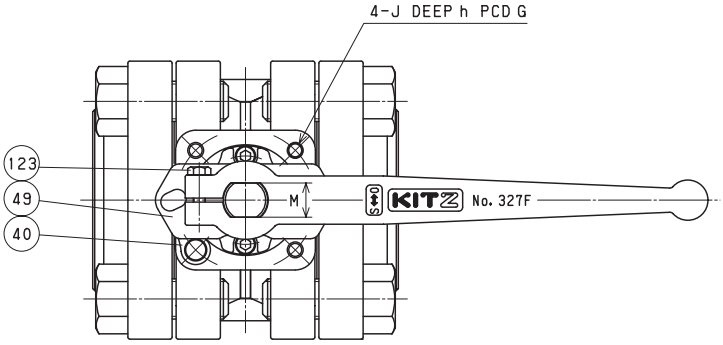

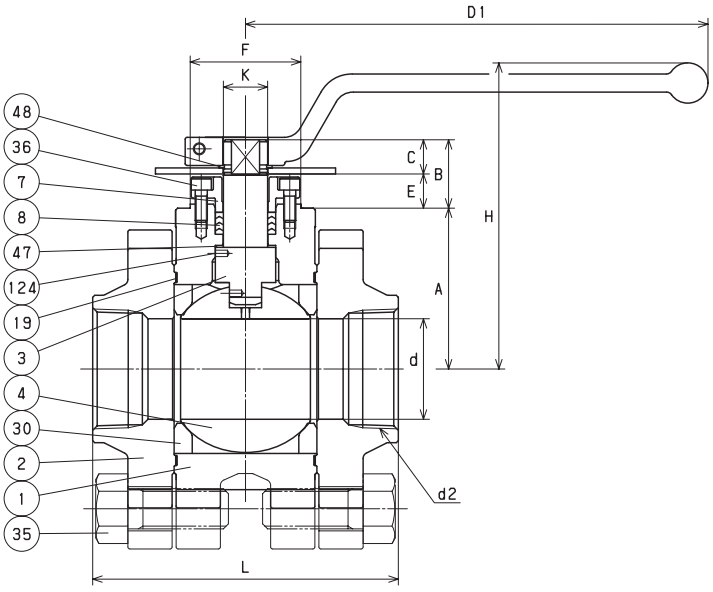

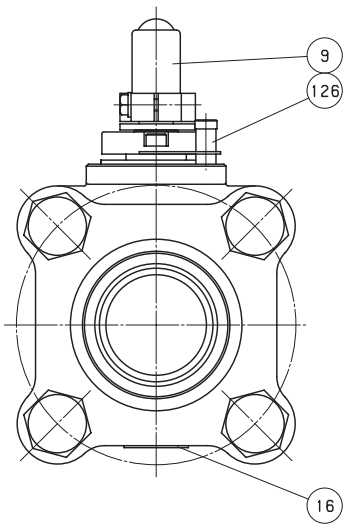

DIMENSIONS

Unit : inch

Nominal Size						Mounting Dimensions for Actuator										
in.	d	H	D1	L	d2	A	B	C	E	F	K	G	J	h	M	ISO 5211 Flange Type
2	1.97	5.98	9.06	5.98	NPT 2	3.150	1.339	0.669	0.669	2.165	0.866	2.756	5/16-18UNC	0.591	0.669	F07

AKU3TFZM-FSO
CODE NO. 329F-LOH

MATERIAL LIST

No.	Name of Parts	Materials
1	BODY	A351 Gr. CF8M
2	CAP	A351 Gr. CF8M
3	STEM	A276 TYPE 316
4	BALL	A276 TYPE 316 or A351 Gr. CF8M
7	GLAND	A276 TYPE 316
8A	GLAND PACKING	FLEXIBLE GRAPHITE
8B	SPACER PACKING	G/F PTFE
9	HANDLE	A276 TYPE 430 (1)
10	HANDLE NUT	A194 Gr. 8
16A	WASHER	STAINLESS STEEL
16B	NAME PLATE	STAINLESS STEEL
19	GASKET	FLEXIBLE GRAPHITE
30	BALL SEAT	HYPATITE PTFE
34	GLAND NUT	A194 Gr. 8
35	CAP BOLT	A193 Gr. B8
40	LOCK PLATE	STAINLESS STEEL
43	CONED DISC SPRING	STAINLESS STEEL
47	THRUST WASHER	25% CARBON FILLED PTFE (2)
126	STOPPER PIN	A276 TYPE 304
A	LATCH LOCK	STAINLESS STEEL

NOTE

(1) Plastic covering.
(2) All valves have an anti-static thrust washer insuring positive conductivity between body and stem.

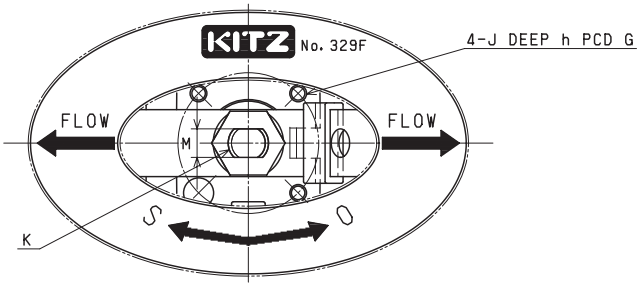

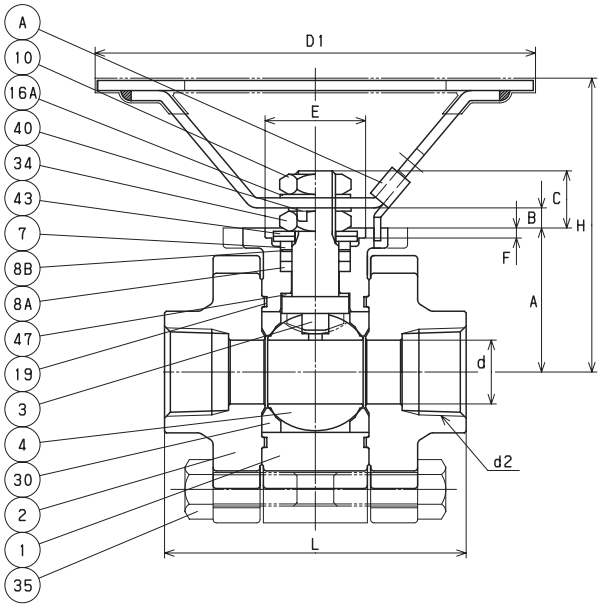

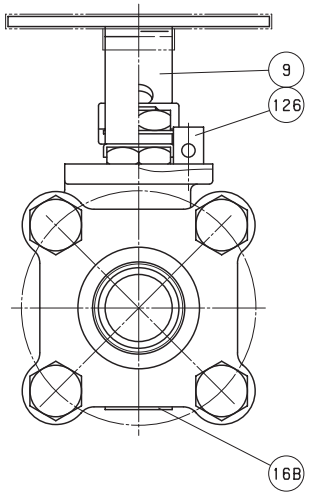

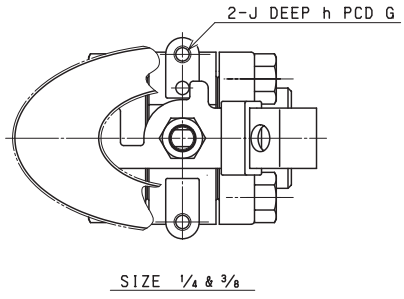

DIMENSIONS

Unit : inch

Nominal Size						Mounting Dimensions for Actuator										
in.	d	H	D1	L	d2	A	B	C	E	F	G	J	h	K	M	ISO 5211 Flange Type
1/4	0.39	2.48	3.94	2.48	NPT 1/4	1.043	0.079	0.413	• •	• •	1.969	1/4-20UNC	0.275	M8	0.197	• •
3/8	0.39	2.48	3.94	2.48	NPT 3/8	1.043	0.079	0.413	• •	• •	1.969	1/4-20UNC	0.275	M8	0.197	• •
1/2	0.55	3.07	5.12	2.80	NPT 1/2	1.378	0.169	0.559	0.984	0.118	1.417	1/4-20UNC	0.197	M10	0.236	F03
3/4	0.75	3.43	5.12	3.54	NPT 3/4	1.693	0.197	0.669	1.181	0.118	1.654	1/4-20UNC	0.315	M12	0.335	F04

AKU3TFZM-FS
CODE NO. 329F

MATERIAL LIST

No.	Name of Parts	Materials
1	BODY	A351 Gr. CF8M
2	CAP	A351 Gr. CF8M
3	STEM	A276 TYPE 316
4	BALL	A276 TYPE 316 or A351 Gr. CF8M
7	GLAND	A276 TYPE 316
8A	GLAND PACKING	FLEXIBLE GRAPHITE
8B	SPACER PACKING	G/F PTFE
9	HANDLE	A276 TYPE 430 (1)
10	HANDLE NUT	A194 Gr. 8
16A	WASHER	STAINLESS STEEL
16B	NAME PLATE	STAINLESS STEEL
19	GASKET	FLEXIBLE GRAPHITE
30	BALL SEAT	HYPATITE PTFE
34	GLAND NUT	A194 Gr. 8
35	CAP BOLT	A193 Gr. B8
40	LOCK PLATE	STAINLESS STEEL
43	CONED DISC SPRING	STAINLESS STEEL
47	THRUST WASHER	25% CARBON FILLED PTFE (2)
126	STOPPER PIN	A276 TYPE 304
A	LATCH LOCK	STAINLESS STEEL

NOTE

(1) Plastic covering.
(2) All valves have an anti-static thrust washer insuring positive conductivity between body and stem.

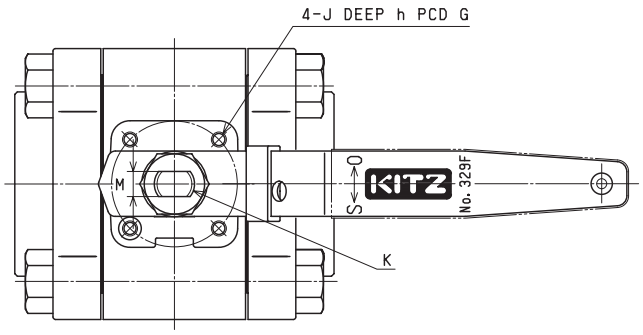

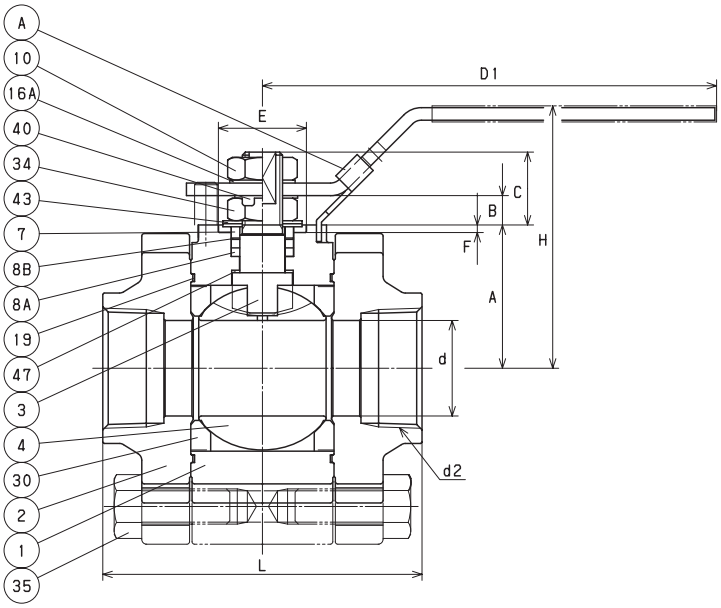

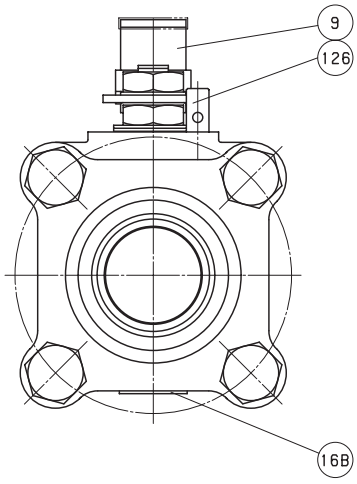

DIMENSIONS

Unit : inch

Nominal Size						Mounting Dimensions for Actuator										
in.	d	H	D1	L	d2	A	B	C	E	F	G	J	h	K	M	ISO 5211 Flange Type
1	0.94	3.23	5.91	4.06	NPT 1	1.732	0.531	1.083	1.181	0.118	1.654	1/4-20UNC	0.315	M14	0.394	F04
1 1/4	1.18	3.46	5.91	4.33	NPT 1 1/4	1.949	0.531	1.071	1.181	0.118	1.654	1/4-20UNC	0.315	M14	0.394	F04
1 1/2	1.50	4.09	7.09	5.00	NPT 1 1/2	2.244	0.461	1.142	1.378	0.118	1.969	1/4-20UNC	0.394	M16	0.394	F05

AKU3TFZM-FS
CODE NO. 329F

MATERIAL LIST

No.	Name of Parts	Materials
1	BODY	A351 Gr. CF8M
2	CAP	A351 Gr. CF8M
3	STEM	A276 TYPE 316
4	BALL	A351 Gr. CF8M
7	GLAND	A351 Gr. CF8
8A	GLAND PACKING	FLEXIBLE GRAPHITE
8B	SPACER PACKING	G/F PTFE
9	HANDLE	DUCTILE IRON
16	NAME PLATE	STAINLESS STEEL
19	GASKET	(2)
30	BALL SEAT	HYPATITE PTFE
35	CAP BOLT	A193 Gr. B8
36	GLAND BOLT	A193 Gr. B8
40	KEY LOCK PLATE	STAINLESS STEEL
47	THRUST WASHER	25% CARBON FILLED PTFE (1)
48	SNAP RING	STAINLESS STEEL
49	STOPPER	STAINLESS STEEL
123	HANDLE BOLT	STAINLESS STEEL
124	SPRING & PIN	A313 & A276 TYPE 316
126	STOPPER PIN	STAINLESS STEEL

NOTE

(1) All valves have an anti-static thrust washer insuring positive conductivity between body and stem.

(2) Flexible graphite with stainless foil insert.

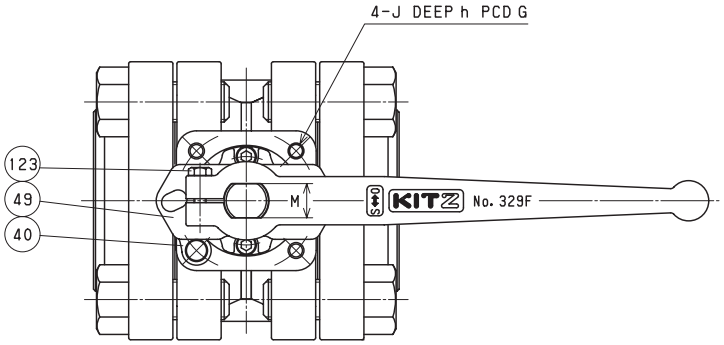

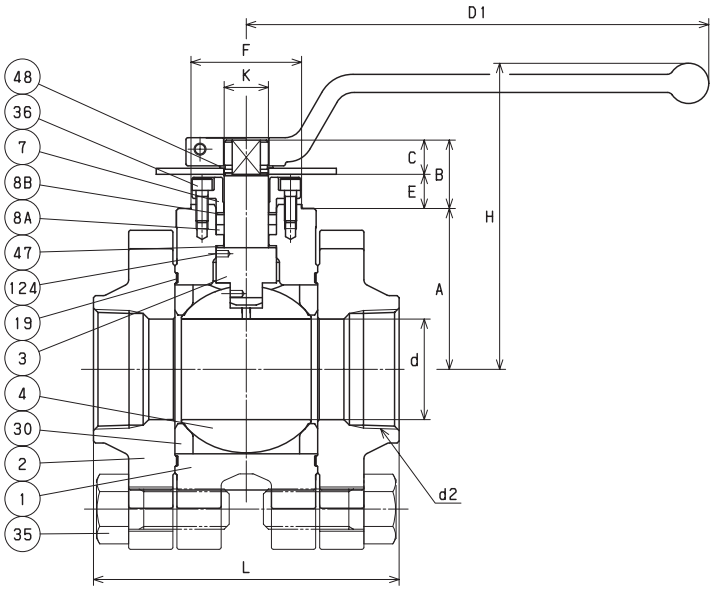

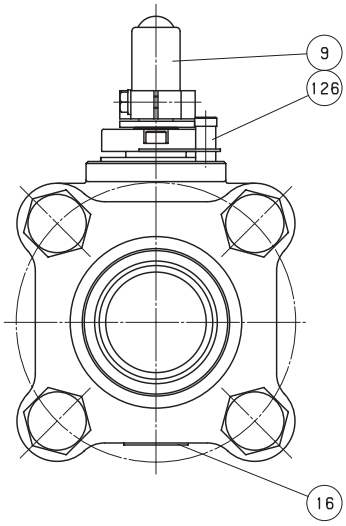

DIMENSIONS

Unit : inch

Nominal Size						Mounting Dimensions for Actuator										
in.	d	H	D1	L	d2	A	B	C	E	F	K	G	J	h	M	ISO 5211 Flange Type
2	1.97	5.98	9.06	5.98	NPT 2	3.150	1.339	0.669	0.669	2.165	0.866	2.756	5/16-18UNC	0.591	0.669	F07

AKU3THZM-O
CODE NO. 327-LOH

MATERIAL LIST

No.	Name of Parts	Materials
1	BODY	A351 Gr. CF8M
2	CAP	A351 Gr. CF8M
3	STEM	A276 TYPE 316
4	BALL	A276 TYPE 316 or A351 Gr. CF8M
7	GLAND	A276 TYPE 316
8	GLAND PACKING	PTFE
9	HANDLE	A276 TYPE 430 (1)
10	HANDLE NUT	A194 Gr. 8
16 A	WASHER	STAINLESS STEEL
16 B	NAME PLATE	STAINLESS STEEL
19	GASKET	PTFE
30	BALL SEAT	HYPATITE PTFE
34	GLAND NUT	A194 Gr. 8
35	CAP BOLT	A193 Gr. B8
40	LOCK PLATE	STAINLESS STEEL
43	CONED DISC SPRING	STAINLESS STEEL
47	THRUST WASHER	25% CARBON FILLED PTFE (2)
126	STOPPER PIN	A276 TYPE 304
A	LATCH LOCK	STAINLESS STEEL

NOTE

(1) Plastic covering.

(2) All valves have an anti-static thrust washer insuring positive conductivity between body and stem.

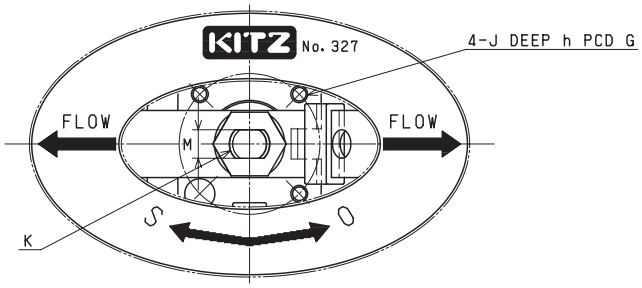

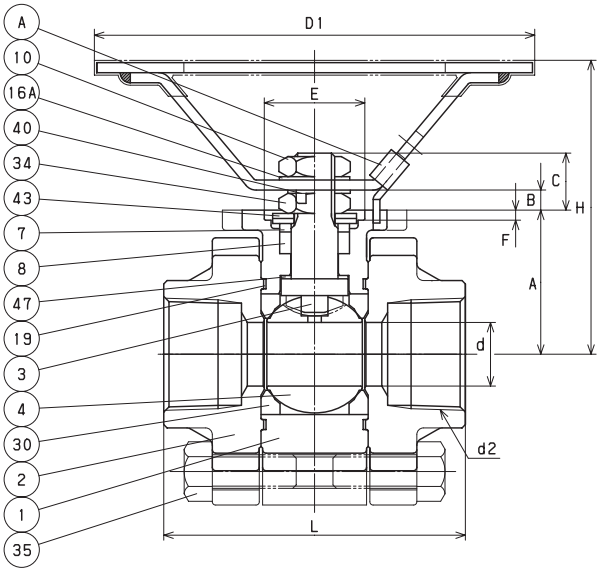

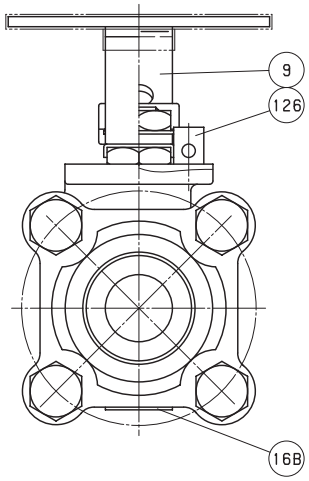

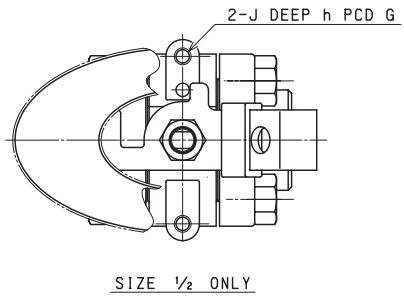

DIMENSIONS

Unit : inch

Nominal Size						Mounting Dimensions for Actuator										
in.	d	H	D1	L	d2	A	B	C	E	F	G	J	h	K	M	ISO 5211 Flange Type
1/2	0.39	2.48	3.94	2.48	NPT 1/2	1.043	0.079	0.413	• •	• •	1.969	1/4-20UNC	0.275	M8	0.197	• •
3/4	0.55	3.07	5.12	2.80	NPT 3/4	1.378	0.169	0.559	0.984	0.118	1.417	1/4-20UNC	0.197	M10	0.236	F03
1	0.75	3.43	5.12	3.54	NPT 1	1.693	0.197	0.669	1.181	0.118	1.654	1/4-20UNC	0.315	M12	0.335	F04

AKU3THZM
CODE NO. 327

MATERIAL LIST

No.	Name of Parts	Materials
1	BODY	A351 Gr. CF8M
2	CAP	A351 Gr. CF8M
3	STEM	A276 TYPE 316
4	BALL	A276 TYPE 316 or A351 Gr. CF8M
7	GLAND	A276 TYPE 316
8	GLAND PACKING	PTFE
9	HANDLE	A276 TYPE 430 (1)
10	HANDLE NUT	A194 Gr. 8
16A	WASHER	STAINLESS STEEL
16B	NAME PLATE	STAINLESS STEEL
19	GASKET	PTFE
30	BALL SEAT	HYPATITE PTFE
34	GLAND NUT	A194 Gr. 8
35	CAP BOLT	A193 Gr. B8
40	LOCK PLATE	STAINLESS STEEL
43	CONED DISC SPRING	STAINLESS STEEL
47	THRUST WASHER	25% CARBON FILLED PTFE (2)
126	STOPPER PIN	A276 TYPE 304
A	LATCH LOCK	STAINLESS STEEL

NOTE

(1) Plastic covering.

(2) All valves have an anti-static thrust washer insuring positive conductivity between body and stem.

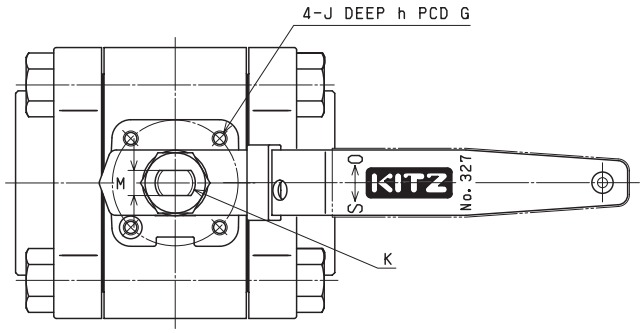

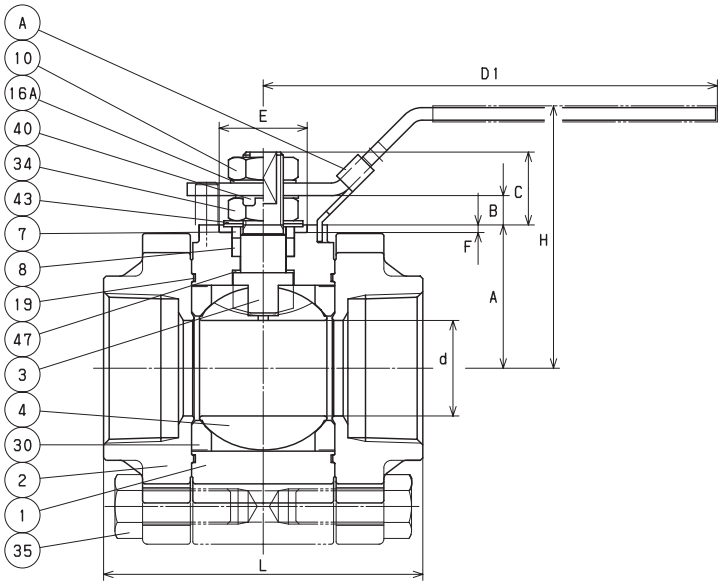

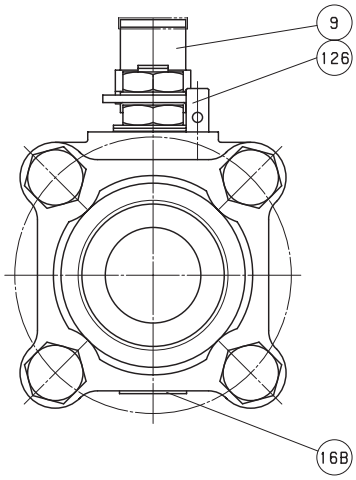

DIMENSIONS

Unit : inch

Nominal Size						Mounting Dimensions for Actuator										
in.	d	H	D1	L	d2	A	B	C	E	F	G	J	h	K	M	ISO 5211 Flange Type
1 1/4	0.94	3.23	5.91	4.06	NPT 1 1/4	1.732	0.531	1.083	1.181	0.118	1.654	1/4-20UNC	0.315	M14	0.394	F04
1 1/2	1.18	3.46	5.91	4.33	NPT 1 1/2	1.949	0.531	1.071	1.181	0.118	1.654	1/4-20UNC	0.315	M14	0.394	F04
2	1.50	4.09	7.09	5.00	NPT 2	2.244	0.461	1.142	1.378	0.118	1.969	1/4-20UNC	0.394	M16	0.394	F05

AKU3THZM
CODE NO. 327

MATERIAL LIST

No.	Name of Parts	Materials
1	BODY	A351 Gr. CF8M
2	CAP	A351 Gr. CF8M
3	STEM	A276 TYPE 316
4	BALL	A351 Gr. CF8M
7	GLAND	A351 Gr. CF8
8	GLAND PACKING	PTFE
9	HANDLE	DUCTILE IRON
16	NAME PLATE	STAINLESS STEEL
19	GASKET	PTFE
30	BALL SEAT	HYPATITE PTFE
35	CAP BOLT	A193 Gr. B8
36	GLAND BOLT	A193 Gr. B8
40	KEY LOCK PLATE	STAINLESS STEEL
47	THRUST WASHER	25% CARBON FILLED PTFE (1)
48	SNAP RING	STAINLESS STEEL
49	STOPPER	STAINLESS STEEL
123	HANDLE BOLT	STAINLESS STEEL
124	SPRING & PIN	A313 & A276 TYPE 316
126	STOPPER PIN	STAINLESS STEEL

NOTE

(1) All valves have an anti-static thrust washer insuring positive conductivity between body and stem.

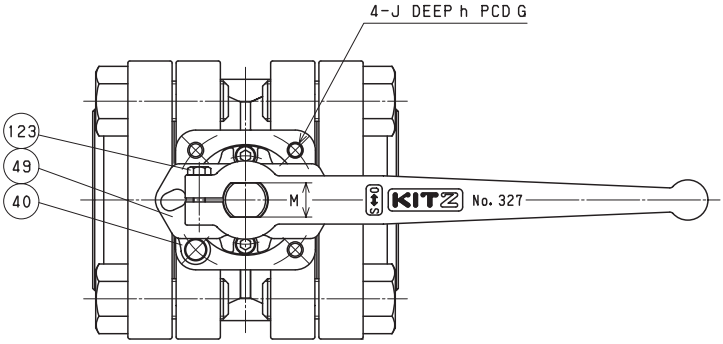

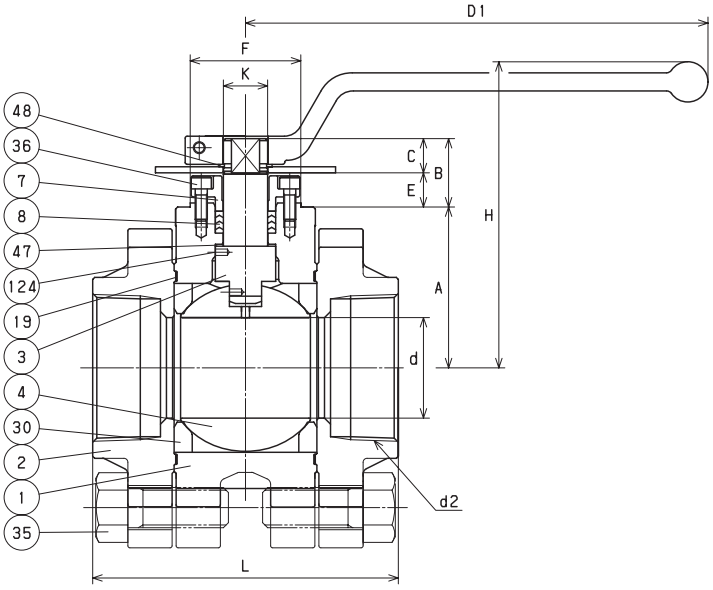

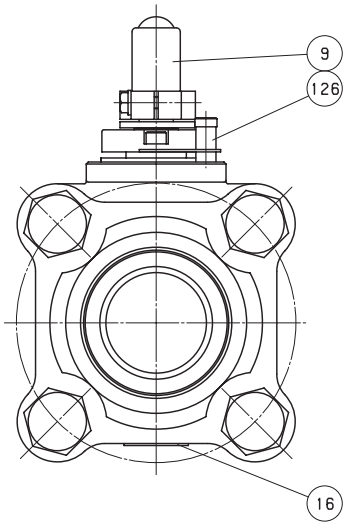

DIMENSIONS

Unit : inch

Nominal Size						Mounting Dimensions for Actuator										
in.	d	H	D1	L	d2	A	B	C	E	F	K	G	J	h	M	ISO 5211 Flange Type
2 1/2	1.97	5.98	9.06	5.98	NPT 2 1/2	3.150	1.339	0.669	0.669	2.165	0.866	2.756	5/16-18UNC	0.591	0.669	F07

AKU3THZM-FSO
CODE NO. 329-LOH

MATERIAL LIST

No.	Name of Parts	Materials
1	BODY	A351 Gr. CF8M
2	CAP	A351 Gr. CF8M
3	STEM	A276 TYPE 316
4	BALL	A276 TYPE 316 or A351 Gr. CF8M
7	GLAND	A276 TYPE 316
8A	GLAND PACKING	FLEXIBLE GRAPHITE
8B	SPACER PACKING	G/F PTFE
9	HANDLE	A276 TYPE 430 (1)
10	HANDLE NUT	A194 Gr. 8
16A	WASHER	STAINLESS STEEL
16B	NAME PLATE	STAINLESS STEEL
19	GASKET	FLEXIBLE GRAPHITE
30	BALL SEAT	HYPATITE PTFE
34	GLAND NUT	A194 Gr. 8
35	CAP BOLT	A193 Gr. B8
40	LOCK PLATE	STAINLESS STEEL
43	CONED DISC SPRING	STAINLESS STEEL
47	THRUST WASHER	25% CARBON FILLED PTFE (2)
126	STOPPER PIN	A276 TYPE 304
A	LATCH LOCK	STAINLESS STEEL

NOTE

(1) Plastic covering.
(2) All valves have an anti-static thrust washer insuring positive conductivity between body and stem.

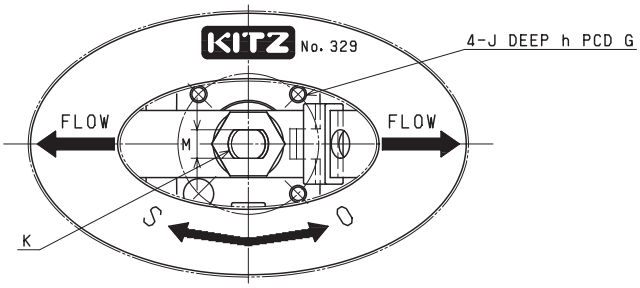

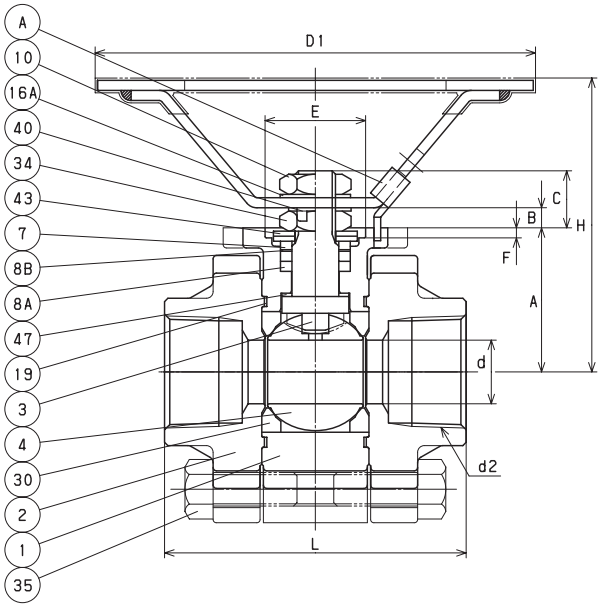

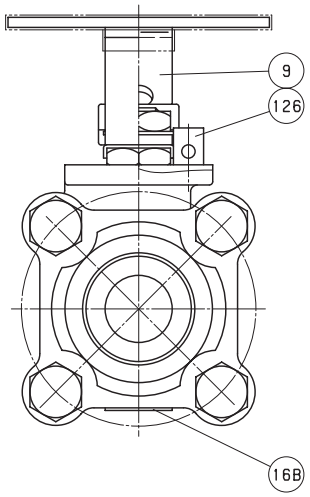

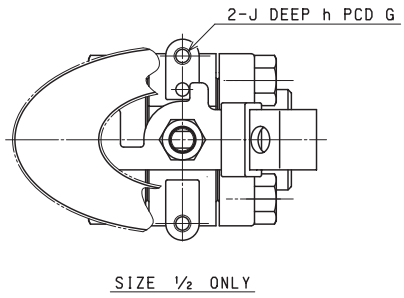

DIMENSIONS

Unit : inch

Nominal Size						Mounting Dimentions for Actuator										
in.	d	H	D1	L	d2	A	B	C	E	F	G	J	h	K	M	ISO 5211 Flange Type
1/2	0.39	2.48	3.94	2.48	NPT 1/2	1.043	0.079	0.413	• •	• •	1.969	1/4-20UNC	0.275	M8	0.197	• •
3/4	0.55	3.07	5.12	2.80	NPT 3/4	1.378	0.169	0.559	0.984	0.118	1.417	1/4-20UNC	0.197	M10	0.236	F03
1	0.75	3.43	5.12	3.54	NPT 1	1.693	0.197	0.669	1.181	0.118	1.654	1/4-20UNC	0.315	M12	0.335	F04

AKU3THZM-FS
CODE NO. 329

MATERIAL LIST

No.	Name of Parts	Materials
1	BODY	A351 Gr. CF8M
2	CAP	A351 Gr. CF8M
3	STEM	A276 TYPE 316
4	BALL	A276 TYPE 316 or A351 Gr. CF8M
7	GLAND	A276 TYPE 316
8A	GLAND PACKING	FLEXIBLE GRAPHITE
8B	SPACER PACKING	G/F PTFE
9	HANDLE	A276 TYPE 430 (1)
10	HANDLE NUT	A194 Gr. 8
16A	WASHER	STAINLESS STEEL
16B	NAME PLATE	STAINLESS STEEL
19	GASKET	FLEXIBLE GRAPHITE
30	BALL SEAT	HYPATITE PTFE
34	GLAND NUT	A194 Gr. 8
35	CAP BOLT	A193 Gr. B8
40	LOCK PLATE	STAINLESS STEEL
43	CONED DISC SPRING	STAINLESS STEEL
47	THRUST WASHER	25% CARBON FILLED PTFE (2)
126	STOPPER PIN	A276 TYPE 304
A	LATCH LOCK	STAINLESS STEEL

NOTE

(1) Plastic covering.
(2) All valves have an anti-static thrust washer insuring positive conductivity between body and stem.

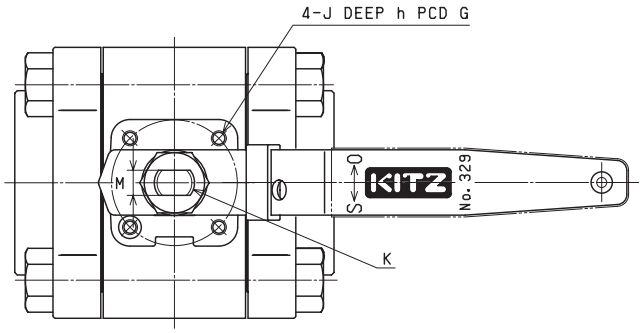

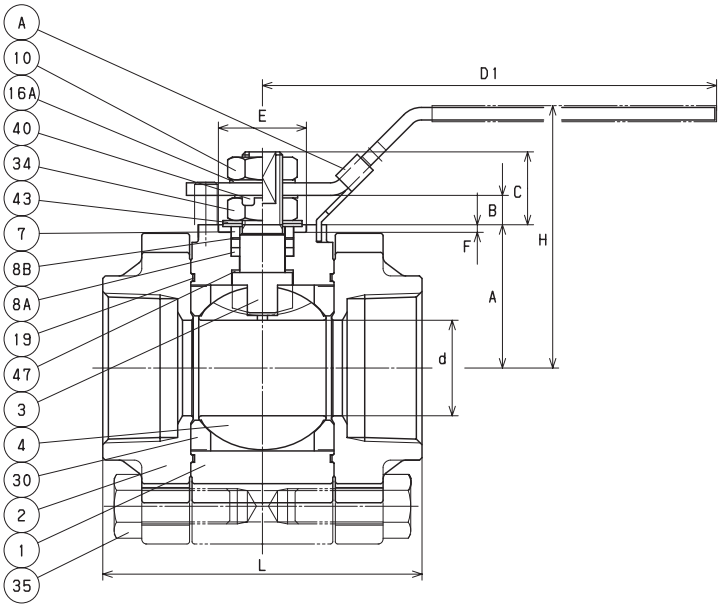

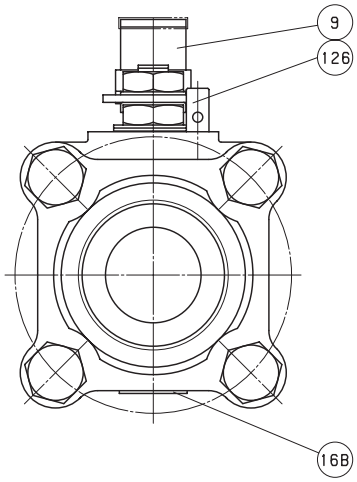

DIMENSIONS

Unit : inch

Nominal Size						Mounting Dimensions for Actuator										
in.	d	H	D1	L	d2	A	B	C	E	F	G	J	h	K	M	ISO 5211 Flange Type
1 1/4	0.94	3.23	5.91	4.06	NPT 1 1/4	1.732	0.531	1.083	1.181	0.118	1.654	1/4-20UNC	0.315	M14	0.394	F04
1 1/2	1.18	3.46	5.91	4.33	NPT 1 1/2	1.949	0.531	1.071	1.181	0.118	1.654	1/4-20UNC	0.315	M14	0.394	F04
2	1.50	4.09	7.09	5.00	NPT 2	2.244	0.461	1.142	1.378	0.118	1.969	1/4-20UNC	0.394	M16	0.394	F05

AKU3THZM-FS
CODE NO. 329

MATERIAL LIST

No.	Name of Parts	Materials
1	BODY	A351 Gr. CF8M
2	CAP	A351 Gr. CF8M
3	STEM	A276 TYPE 316
4	BALL	A351 Gr. CF8M
7	GLAND	A351 Gr. CF8
8A	GLAND PACKING	FLEXIBLE GRAPHITE
8B	SPACER PACKING	G/F PTFE
9	HANDLE	DUCTILE IRON
16	NAME PLATE	STAINLESS STEEL
19	GASKET	(2)
30	BALL SEAT	HYPATITE PTFE
35	CAP BOLT	A193 Gr. B8
36	GLAND BOLT	A193 Gr. B8
40	KEY LOCK PLATE	STAINLESS STEEL
47	THRUST WASHER	25% CARBON FILLED PTFE (1)
48	SNAP RING	STAINLESS STEEL
49	STOPPER	STAINLESS STEEL
123	HANDLE BOLT	STAINLESS STEEL
124	SPRING & PIN	A313 & A276 TYPE 316
126	STOPPER PIN	STAINLESS STEEL

NOTE

(1) All valves have an anti-static thrust washer insuring positive conductivity between body and stem.

(2) Flexible graphite with stainless foil insert.

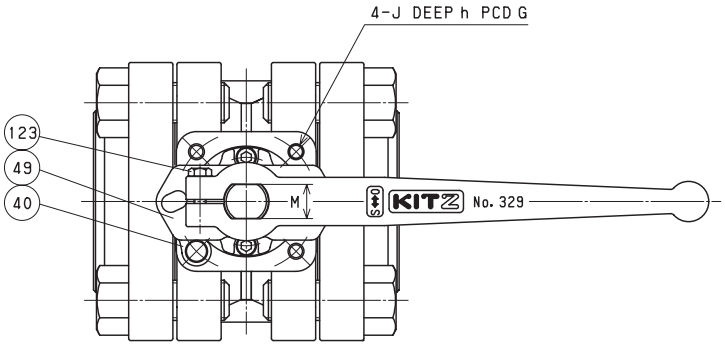

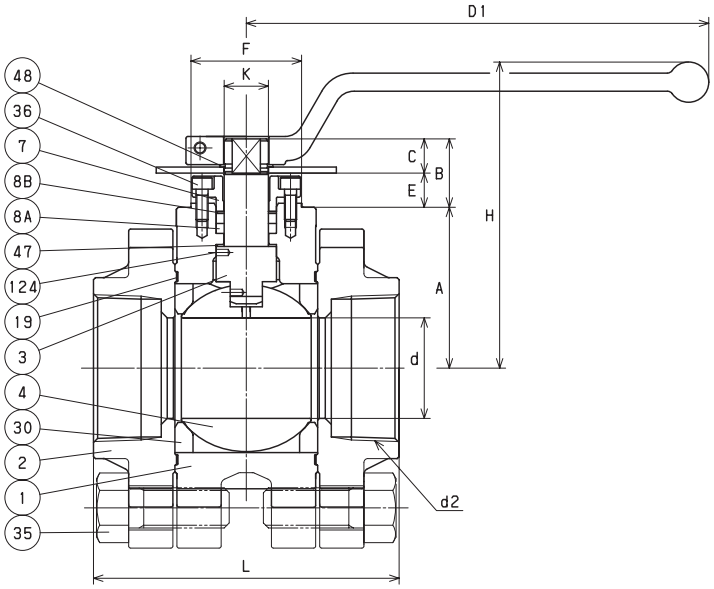

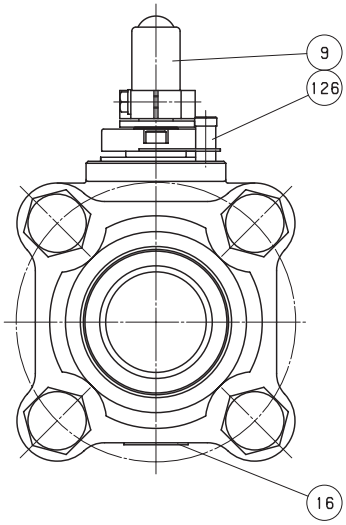

DIMENSIONS

Unit : inch

Nominal Size						Mounting Dimensions for Actuator										
in.	d	H	D1	L	d2	A	B	C	E	F	K	G	J	h	M	ISO 5211 Flange Type
2 1/2	1.97	5.98	9.06	5.98	NPT 2 1/2	3.150	1.339	0.669	0.669	2.165	0.866	2.756	5/16-18UNC	0.591	0.669	F07

BWSC3TFZM-O
CODE NO. 317FB-LOH

MATERIAL LIST

No.	Name of Parts	Materials
1	BODY	A216 Gr. WCB
2	CAP	A216 Gr. WCB
3	STEM	A276 TYPE 316
4	BALL	A276 TYPE 316 or A351 Gr. CF8M
7	GLAND	A276 TYPE 316
8	GLAND PACKING	PTFE
9	HANDLE	A276 TYPE 430 (1)
10	HANDLE NUT	A194 Gr. 8
16 A	WASHER	STAINLESS STEEL
16 B	NAME PLATE	STAINLESS STEEL
19	GASKET	PTFE
30	BALL SEAT	HYPAATITE PTFE
34	GLAND NUT	A194 Gr. 8
35	CAP BOLT	A193 Gr. B8
40	LOCK PLATE	STAINLESS STEEL
43	CONED DISC SPRING	STAINLESS STEEL
47	THRUST WASHER	25% CARBON FILLED PTFE (2)
126	STOPPER PIN	A276 TYPE 304
A	LATCH LOCK	STAINLESS STEEL

NOTE

(1) Plastic covering.

(2) All valves have an anti-static thrust washer insuring positive conductivity between body and stem.

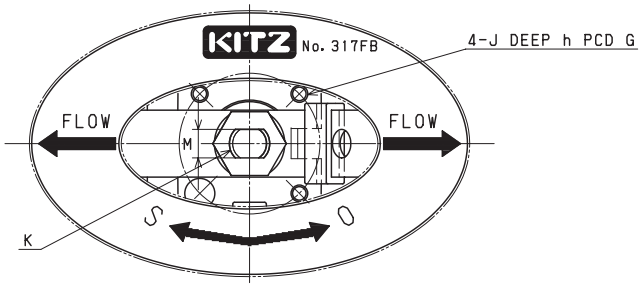

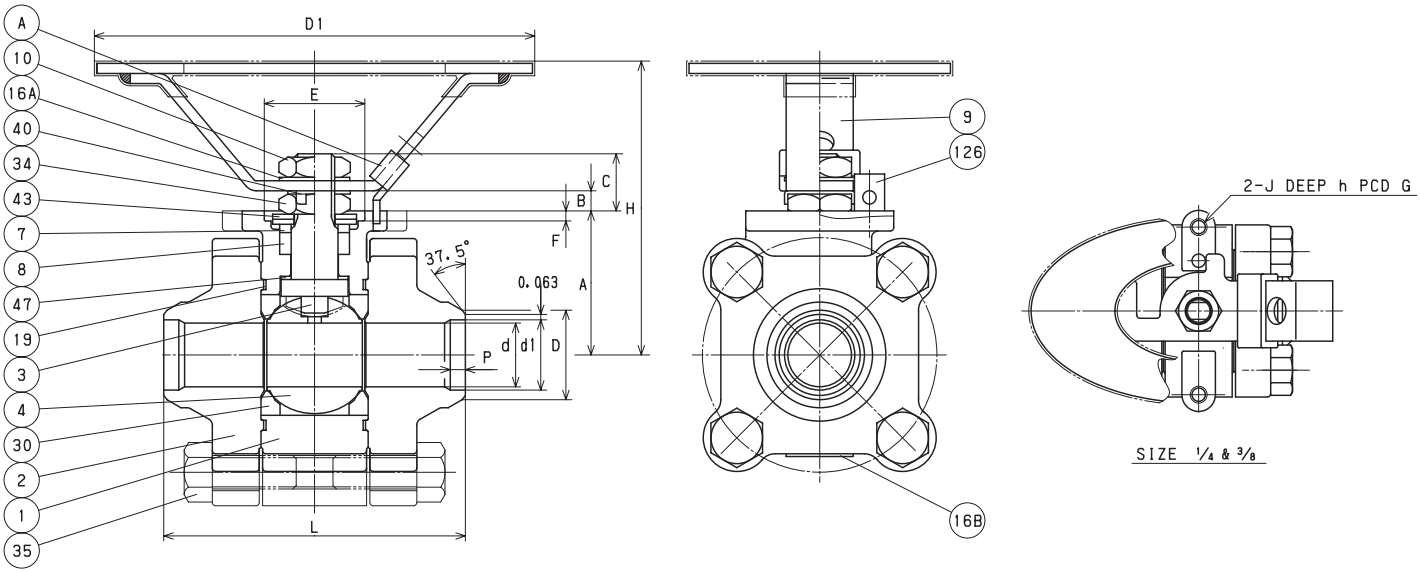

DIMENSIONS

Unit : inch

Nominal Size					Welding End			Mounting Dimensions for Actuator										
in.	d	H	D1	L	d1	D	P	A	B	C	E	F	G	J	h	K	M	ISO 5211 Flange Type
1/4	0.39	2.48	3.94	2.48	0.363	0.539	0.197	1.043	0.079	0.413	• •	• •	1.969	1/4-20UNC	0.275	M8	0.197	• •
3/8	0.39	2.48	3.94	2.48	0.491	0.673	0.197	1.043	0.079	0.413	• •	• •	1.969	1/4-20UNC	0.275	M8	0.197	• •
1/2	0.55	3.07	5.12	2.80	0.620	0.839	0.177	1.378	0.169	0.559	0.984	0.118	1.417	1/4-20UNC	0.197	M10	0.236	F03
3/4	0.75	3.43	5.12	3.54	0.825	1.051	0.177	1.693	0.197	0.669	1.181	0.118	1.654	1/4-20UNC	0.315	M12	0.335	F04

BWSC3TFZM
CODE NO. 317FB

MATERIAL LIST

No.	Name of Parts	Materials
1	BODY	A216 Gr. WCB
2	CAP	A216 Gr. WCB
3	STEM	A276 TYPE 316
4	BALL	A276 TYPE 316 or A351 Gr. CF8M
7	GLAND	A276 TYPE 316
8	GLAND PACKING	PTFE
9	HANDLE	A276 TYPE 430 (1)
10	HANDLE NUT	A194 Gr. 8
16A	WASHER	STAINLESS STEEL
16B	NAME PLATE	STAINLESS STEEL
19	GASKET	PTFE
30	BALL SEAT	HYPAATITE PTFE
34	GLAND NUT	A194 Gr. 8
35	CAP BOLT	A193 Gr. B8
40	LOCK PLATE	STAINLESS STEEL
43	CONED DISC SPRING	STAINLESS STEEL
47	THRUST WASHER	25% CARBON FILLED PTFE (2)
126	STOPPER PIN	A276 TYPE 304
A	LATCH LOCK	STAINLESS STEEL

NOTE

(1) Plastic covering.

(2) All valves have an anti-static thrust washer insuring positive conductivity between body and stem.

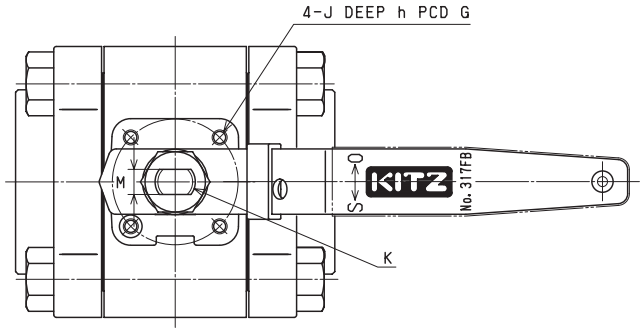

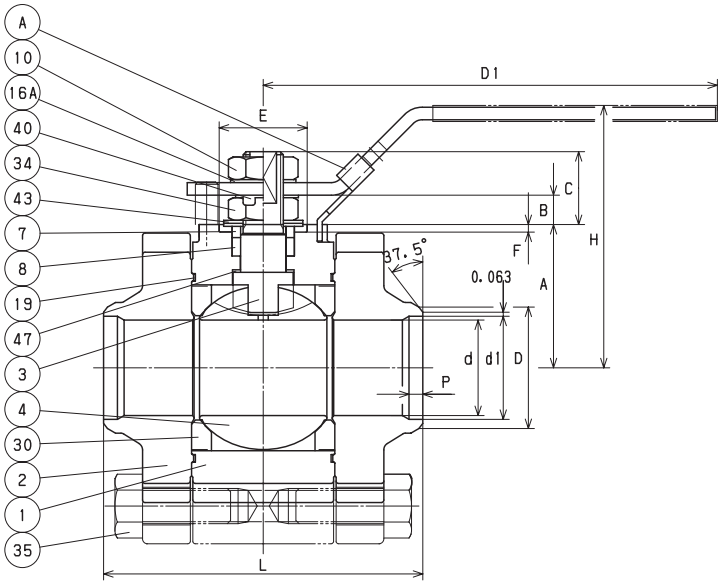

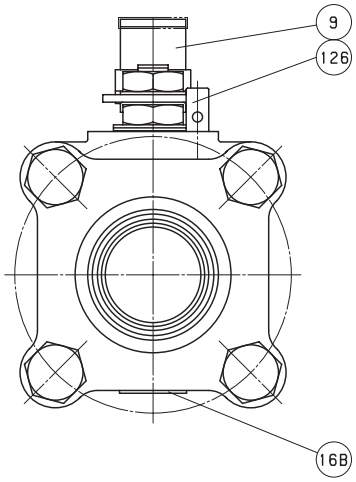

DIMENSIONS

Unit : inch

Nominal Size					Welding End			Mounting Dimensions for Actuator									
in.	d	H	D1	L	d1	D	P	A	B	C	E	F	G	J	h	K	M	ISO 5211 Flange Type
1	0.94	3.23	5.91	4.06	1.049	1.315	0.217	1.732	0.531	1.083	1.181	0.118	1.654	1/4-20UNC	0.315	M14	0.394	F04
1 1/4	1.18	3.46	5.91	4.33	1.381	1.661	0.315	1.949	0.531	1.071	1.181	0.118	1.654	1/4-20UNC	0.315	M14	0.394	F04
1 1/2	1.50	4.09	7.09	5.00	1.616	1.902	0.217	2.244	0.461	1.142	1.378	0.118	1.969	1/4-20UNC	0.394	M16	0.394	F05

BWSC3TFZM
CODE NO. 317FB

MATERIAL LIST

No.	Name of Parts	Materials
1	BODY	A216 Gr. WCB
2	CAP	A216 Gr. WCB
3	STEM	A276 TYPE 316
4	BALL	A351 Gr. CF8M
7	GLAND	A351 Gr. CF8
8	GLAND PACKING	PTFE
9	HANDLE	DUCTILE IRON
16	NAME PLATE	STAINLESS STEEL
19	GASKET	PTFE
30	BALL SEAT	HYPATITE PTFE
35	CAP BOLT	A193 Gr. B8
36	GLAND BOLT	A193 Gr. B8
40	KEY LOCK PLATE	STAINLESS STEEL
47	THRUST WASHER	25% CARBON FILLED PTFE (1)
48	SNAP RING	STAINLESS STEEL
49	STOPPER	STAINLESS STEEL
123	HANDLE BOLT	STAINLESS STEEL
124	SPRING & PIN	A313 & A276 TYPE 316
126	STOPPER PIN	STAINLESS STEEL

NOTE

(1) All valves have an anti-static thrust washer insuring positive conductivity between body and stem.

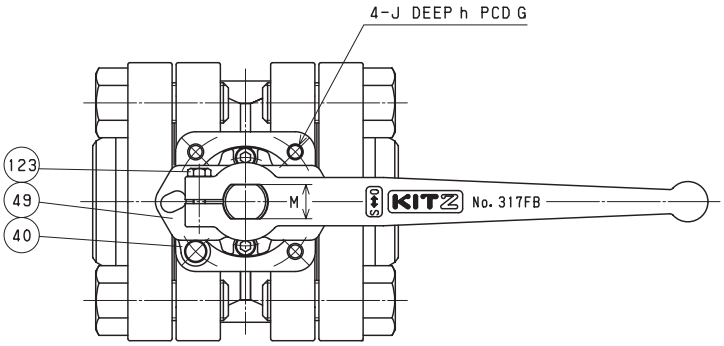

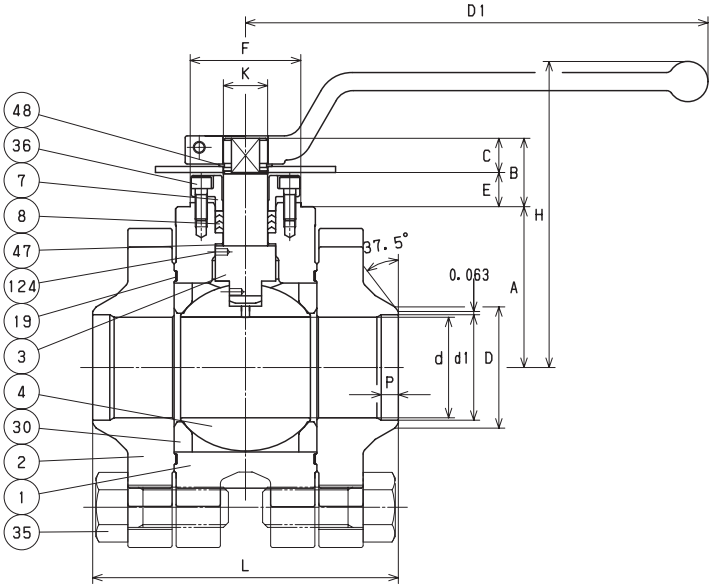

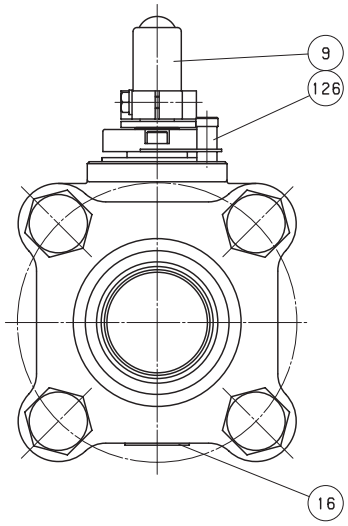

DIMENSIONS

Unit : inch

Nominal Size					Welding End			Mounting Dimensions for Actuator									
in.	d	H	D1	L	d1	D	P	A	B	C	E	F	K	G	J	h	M	ISO 5211 Flange Type
2	1.97	5.98	9.06	5.98	2.067	2.374	0.335	3.150	1.339	0.669	0.669	2.165	0.866	2.756	5/16-18UNC	0.591	0.669	F07

BWSC3THZM-O
CODE NO. 317B-LOH

MATERIAL LIST

No.	Name of Parts	Materials
1	BODY	A216 Gr. WCB
2	CAP	A216 Gr. WCB
3	STEM	A276 TYPE 316
4	BALL	A276 TYPE 316 or A351 Gr. CF8M
7	GLAND	A276 TYPE 316
8	GLAND PACKING	PTFE
9	HANDLE	A276 TYPE 430 (1)
10	HANDLE NUT	A194 Gr. 8
16A	WASHER	STAINLESS STEEL
16B	NAME PLATE	STAINLESS STEEL
19	GASKET	PTFE
30	BALL SEAT	HYPATITE PTFE
34	GLAND NUT	A194 Gr. 8
35	CAP BOLT	A193 Gr. B8
40	LOCK PLATE	STAINLESS STEEL
43	CONED DISC SPRING	STAINLESS STEEL
47	THRUST WASHER	25% CARBON FILLED PTFE (2)
126	STOPPER PIN	A276 TYPE 304
A	LATCH LOCK	STAINLESS STEEL

NOTE

(1) Plastic covering.

(2) All valves have an anti-static thrust washer insuring positive conductivity between body and stem.

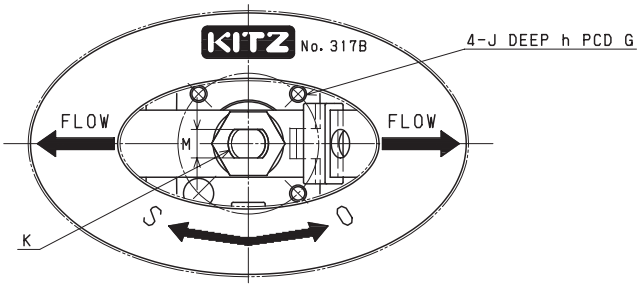

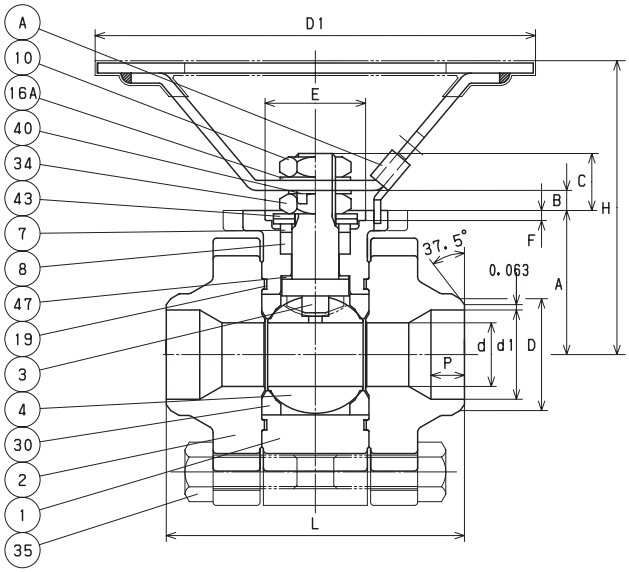

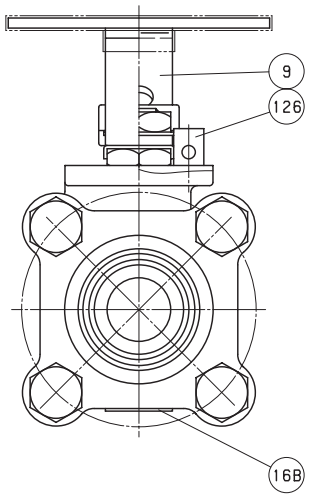

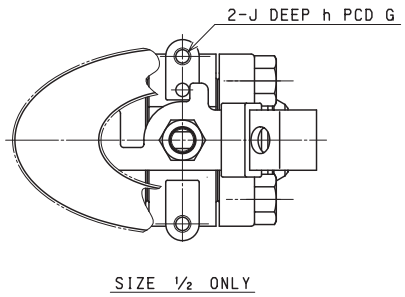

DIMENSIONS

Unit : inch

Nominal Size					Welding End			Mounting Dimensions for Actuator									
in.	d	H	D1	L	d1	D	P	A	B	C	E	F	G	J	h	K	M	ISO 5211 Flange Type
1/2	0.39	2.48	3.94	2.48	0.620	0.839	0.236	1.043	0.079	0.413	• •	• •	1.969	1/4-20UNC	0.275	M8	0.197	• •
3/4	0.55	3.07	5.12	2.76	0.825	1.051	0.276	1.378	0.169	0.559	0.984	0.118	1.417	1/4-20UNC	0.197	M10	0.236	F03
1	0.75	3.43	5.12	3.50	1.049	1.315	0.394	1.693	0.197	0.669	1.181	0.118	1.654	1/4-20UNC	0.315	M12	0.335	F04

BWSC3THZM
CODE NO. 317B

MATERIAL LIST

No.	Name of Parts	Materials
1	BODY	A216 Gr. WCB
2	CAP	A216 Gr. WCB
3	STEM	A276 TYPE 316
4	BALL	A276 TYPE 316 or A351 Gr. CF8M
7	GLAND	A276 TYPE 316
8	GLAND PACKING	PTFE
9	HANDLE	A276 TYPE 430 (1)
10	HANDLE NUT	A194 Gr. 8
16 A	WASHER	STAINLESS STEEL
16 B	NAME PLATE	STAINLESS STEEL
19	GASKET	PTFE
30	BALL SEAT	HYPATITE PTFE
34	GLAND NUT	A194 Gr. 8
35	CAP BOLT	A193 Gr. B8
40	LOCK PLATE	STAINLESS STEEL
43	CONED DISC SPRING	STAINLESS STEEL
47	THRUST WASHER	25% CARBON FILLED PTFE (2)
126	STOPPER PIN	A276 TYPE 304
A	LATCH LOCK	STAINLESS STEEL

NOTE

(1) Plastic covering.

(2) All valves have an anti-static thrust washer insuring positive conductivity between body and stem.

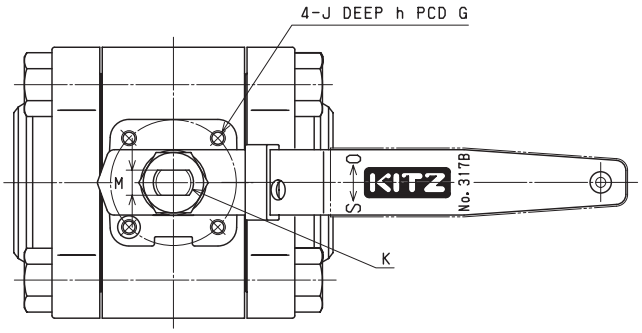

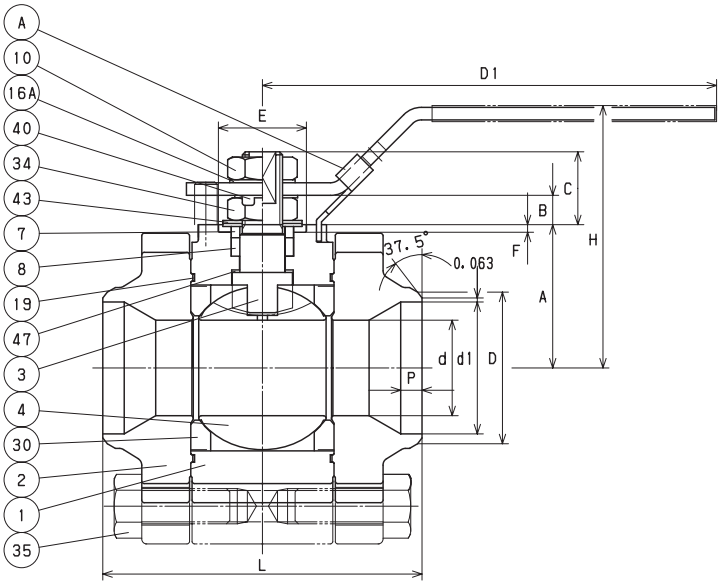

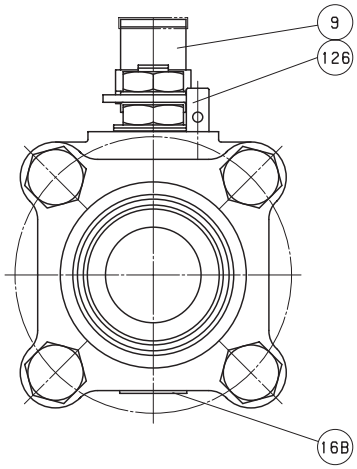

DIMENSIONS

Unit : inch

Nominal Size					Welding End			Mounting Dimensions for Actuator										
in.	d	H	D1	L	d1	D	P	A	B	C	E	F	G	J	h	K	M	ISO 5211 Flange Type
1 1/4	0.94	3.23	5.91	4.06	1.381	1.661	0.236	1.732	0.531	1.083	1.181	0.118	1.654	1/4-20UNC	0.315	M14	0.394	F04
1 1/2	1.18	3.46	5.91	4.33	1.616	1.902	0.315	1.949	0.531	1.071	1.181	0.118	1.654	1/4-20UNC	0.315	M14	0.394	F04
2	1.50	4.09	7.09	5.00	2.066	2.374	0.335	2.244	0.461	1.142	1.378	0.118	1.969	1/4-20UNC	0.394	M16	0.394	F05

BWSC3THZM
CODE NO. 317B

MATERIAL LIST

No.	Name of Parts	Materials
1	BODY	A216 Gr. WCB
2	CAP	A216 Gr. WCB
3	STEM	A276 TYPE 316
4	BALL	A351 Gr. CF8M
7	GLAND	A351 Gr. CF8
8	GLAND PACKING	PTFE
9	HANDLE	DUCTILE IRON
16	NAME PLATE	STAINLESS STEEL
19	GASKET	PTFE
30	BALL SEAT	HYPATITE PTFE
35	CAP BOLT	A193 Gr. B8
36	GLAND BOLT	A193 Gr. B8
40	KEY LOCK PLATE	STAINLESS STEEL
47	THRUST WASHER	25% CARBON FILLED PTFE (1)
48	SNAP RING	STAINLESS STEEL
49	STOPPER	STAINLESS STEEL
123	HANDLE BOLT	STAINLESS STEEL
124	SPRING & PIN	A313 & A276 TYPE 316
126	STOPPER PIN	STAINLESS STEEL

NOTE

(1) All valves have an anti-static thrust washer insuring positive conductivity between body and stem.

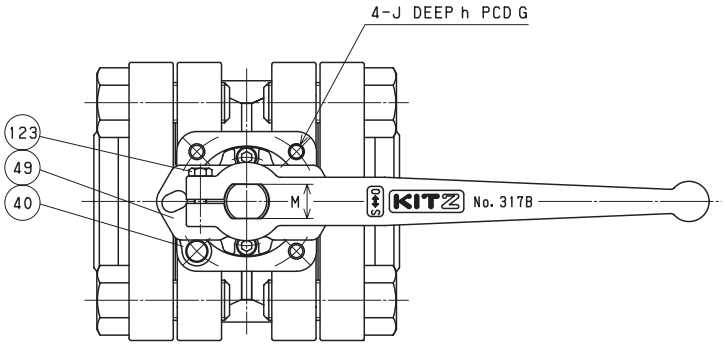

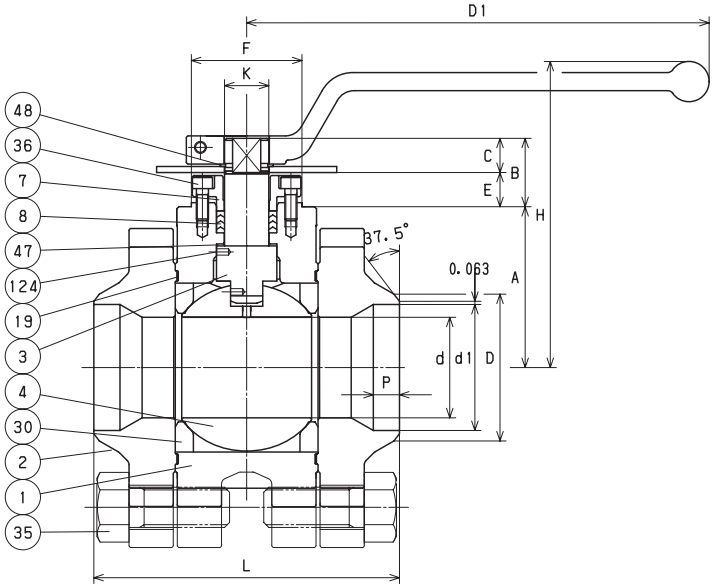

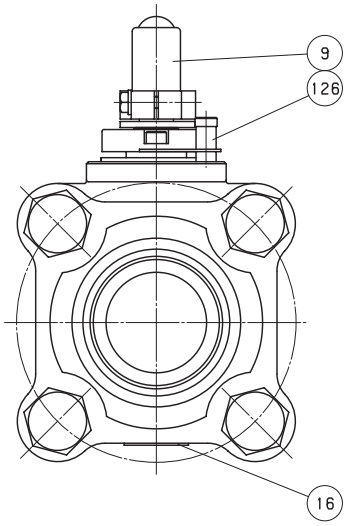

DIMENSIONS

Unit : inch

Nominal Size					Welding End			Mounting Dimensions for Actuator									
in.	d	H	D1	L	d1	D	P	A	B	C	E	F	K	G	J	h	M	ISO 5211 Flange Type
2 1/2	1.97	5.98	9.06	5.98	2.469	2.874	0.512	3.150	1.339	0.669	0.669	2.165	0.866	2.756	5/16-18UNC	0.591	0.669	F07

BWSC3TFZM-FSO
CODE NO. 319FB-LOH

MATERIAL LIST

No.	Name of Parts	Materials
1	BODY	A216 Gr. WCB
2	CAP	A216 Gr. WCB
3	STEM	A276 TYPE 316
4	BALL	A276 TYPE 316 or A351 Gr. CF8M
7	GLAND	A276 TYPE 316
8A	GLAND PACKING	FLEXIBLE GRAPHITE
8B	SPACER PACKING	G/F PTFE
9	HANDLE	A276 TYPE 430 (1)
10	HANDLE NUT	A194 Gr. 8
16A	WASHER	STAINLESS STEEL
16B	NAME PLATE	STAINLESS STEEL
19	GASKET	FLEXIBLE GRAPHITE
30	BALL SEAT	HYPATITE PTFE
34	GLAND NUT	A194 Gr. 8
35	CAP BOLT	A193 Gr. B8
40	LOCK PLATE	STAINLESS STEEL
43	CONED DISC SPRING	STAINLESS STEEL
47	THRUST WASHER	25% CARBON FILLED PTFE (2)
126	STOPPER PIN	A276 TYPE 304
A	LATCH LOCK	STAINLESS STEEL

NOTE

(1) Plastic covering.
(2) All valves have an anti-static thrust washer insuring positive conductivity between body and stem.

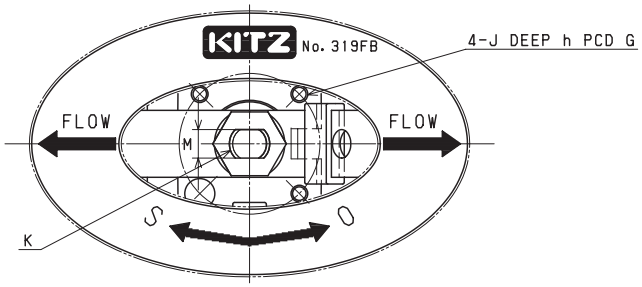

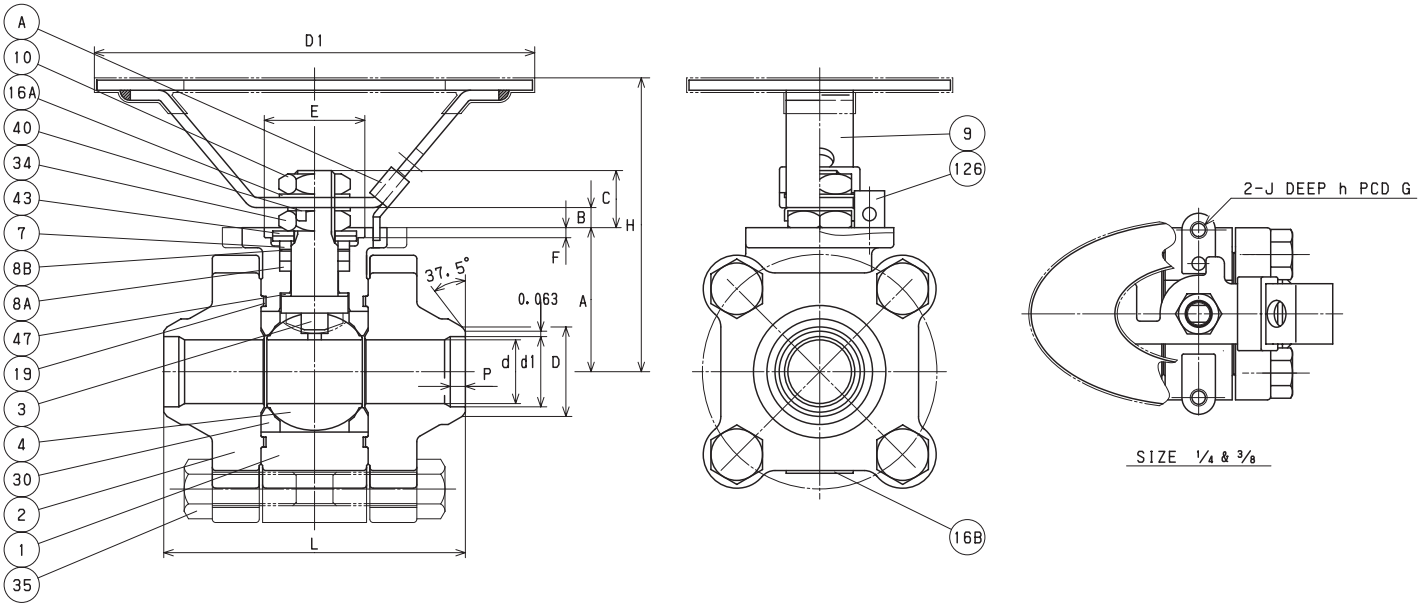

DIMENSIONS

Unit : inch

Nominal Size					Welding End			Mounting Dimensions for Actuator										
in.	d	H	D1	L	d1	D	P	A	B	C	E	F	G	J	h	K	M	ISO 5211 Flange Type
1/4	0.39	2.48	3.94	2.48	0.363	0.539	0.197	1.043	0.079	0.413	• •	• •	1.969	1/4-20UNC	0.275	M8	0.197	• •
3/8	0.39	2.48	3.94	2.48	0.491	0.673	0.197	1.043	0.079	0.413	• •	• •	1.969	1/4-20UNC	0.275	M8	0.197	• •
1/2	0.55	3.07	5.12	2.80	0.620	0.839	0.177	1.378	0.169	0.559	0.984	0.118	1.417	1/4-20UNC	0.197	M10	0.236	F03
3/4	0.75	3.43	5.12	3.54	0.825	1.051	0.177	1.693	0.197	0.669	1.181	0.118	1.654	1/4-20UNC	0.315	M12	0.335	F04

BWSC3TFZM-FS
CODE NO. 319FB

MATERIAL LIST

No.	Name of Parts	Materials
1	BODY	A216 Gr. WCB
2	CAP	A216 Gr. WCB
3	STEM	A276 TYPE 316
4	BALL	A276 TYPE 316 or A351 Gr. CF8M
7	GLAND	A276 TYPE 316
8A	GLAND PACKING	FLEXIBLE GRAPHITE
8B	SPACER PACKING	G/F PTFE
9	HANDLE	A276 TYPE 430 (1)
10	HANDLE NUT	A194 Gr. 8
16A	WASHER	STAINLESS STEEL
16B	NAME PLATE	STAINLESS STEEL
19	GASKET	FLEXIBLE GRAPHITE
30	BALL SEAT	HYPATITE PTFE
34	GLAND NUT	A194 Gr. 8
35	CAP BOLT	A193 Gr. B8
40	LOCK PLATE	STAINLESS STEEL
43	CONED DISC SPRING	STAINLESS STEEL
47	THRUST WASHER	25% CARBON FILLED PTFE (2)
126	STOPPER PIN	A276 TYPE 304
A	LATCH LOCK	STAINLESS STEEL

NOTE

(1) Plastic covering.
(2) All valves have an anti-static thrust washer insuring positive conductivity between body and stem.

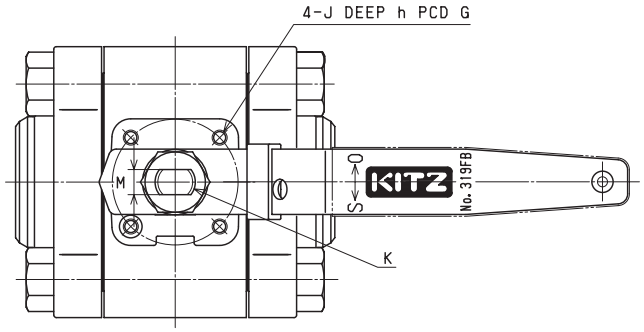

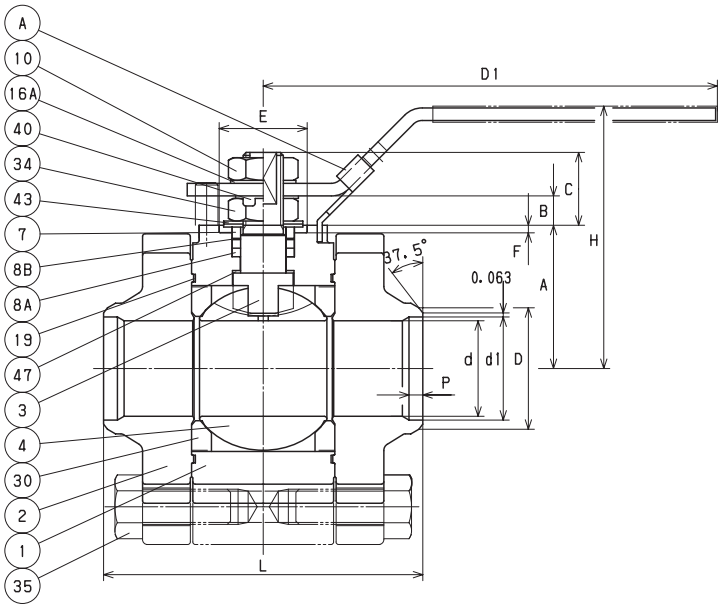

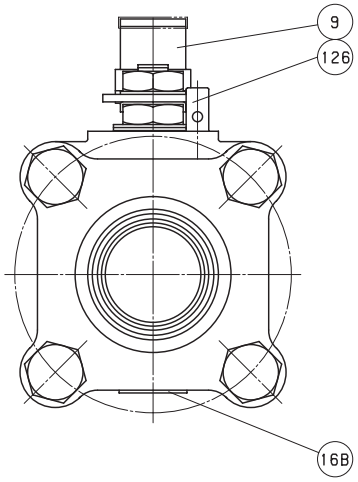

DIMENSIONS

Unit : inch

Nominal Size					Welding End			Mounting Dimensions for Actuator									
in.	d	H	D1	L	d1	D	P	A	B	C	E	F	G	J	h	K	M	ISO 5211 Flange Type
1	0.94	3.23	5.91	4.06	1.049	1.315	0.217	1.732	0.531	1.083	1.181	0.118	1.654	1/4-20UNC	0.315	M14	0.394	F04
1 1/4	1.18	3.46	5.91	4.33	1.381	1.661	0.315	1.949	0.531	1.071	1.181	0.118	1.654	1/4-20UNC	0.315	M14	0.394	F04
1 1/2	1.50	4.09	7.09	5.00	1.616	1.902	0.217	2.244	0.461	1.142	1.378	0.118	1.969	1/4-20UNC	0.394	M16	0.394	F05

BWSC3TFZM-FS
CODE NO. 319FB

MATERIAL LIST

No.	Name of Parts	Materials
1	BODY	A216 Gr.CF WCB
2	CAP	A216 Gr.CF WCB
3	STEM	A276 TYPE 316
4	BALL	A351 Gr. CF8M
7	GLAND	A351 Gr. CF8
8A	GLAND PACKING	FLEXIBLE GRAPHITE
8B	SPACER PACKING	G/F PTFE
9	HANDLE	DUCTILE IRON
16	NAME PLATE	STAINLESS STEEL
19	GASKET	(2)
30	BALL SEAT	HYPATITE PTFE
35	CAP BOLT	A193 Gr. B8
36	GLAND BOLT	A193 Gr. B8
40	KEY LOCK PLATE	STAINLESS STEEL
47	THRUST WASHER	25% CARBON FILLED PTFE (1)
48	SNAP RING	STAINLESS STEEL
49	STOPPER	STAINLESS STEEL
123	HANDLE BOLT	STAINLESS STEEL
124	SPRING & PIN	A313 & A276 TYPE 316
126	STOPPER PIN	STAINLESS STEEL

NOTE

(1) All valves have an anti-static thrust washer insuring positive conductivity between body and stem.

(2) Flexible graphite with stainless foil insert.

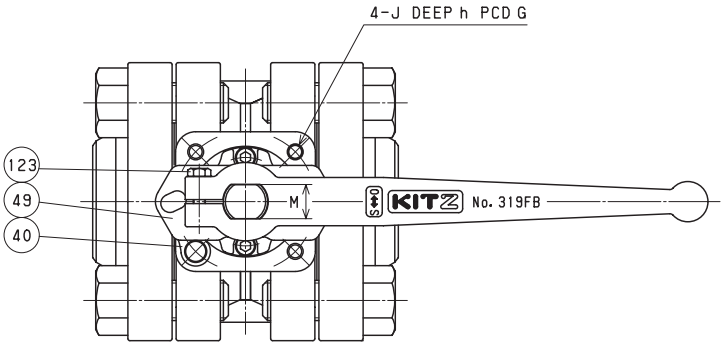

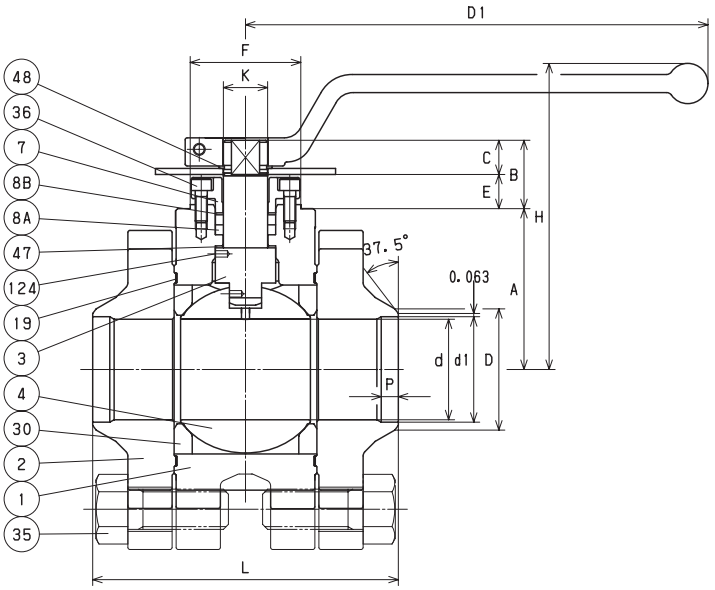

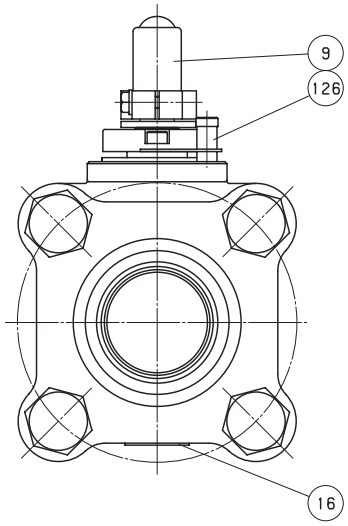

DIMENSIONS

Unit : inch

Nominal Size					Welding End			Mounting Dimensions for Actuator									
in.	d	H	D1	L	d1	D	P	A	B	C	E	F	K	G	J	h	M	ISO 5211 Flange Type
2	1.97	5.98	9.06	5.98	2.067	2.374	0.335	3.150	1.339	0.669	0.669	2.165	0.866	2.756	5/16-18UNC	0.591	0.669	F07

BWSC3THZM-FSO
CODE NO. 319B-LOH

MATERIAL LIST

No.	Name of Parts	Materials
1	BODY	A216 Gr. WCB
2	CAP	A216 Gr. WCB
3	STEM	A276 TYPE 316
4	BALL	A276 TYPE 316 or A351 Gr. CF8M
7	GLAND	A276 TYPE 316
8A	GLAND PACKING	FLEXIBLE GRAPHITE
8B	SPACER PACKING	G/F PTFE
9	HANDLE	A276 TYPE 430 (1)
10	HANDLE NUT	A194 Gr. 8
16A	WASHER	STAINLESS STEEL
16B	NAME PLATE	STAINLESS STEEL
19	GASKET	FLEXIBLE GRAPHITE
30	BALL SEAT	HYPATITE PTFE
34	GLAND NUT	A194 Gr. 8
35	CAP BOLT	A193 Gr. B8
40	LOCK PLATE	STAINLESS STEEL
43	CONED DISC SPRING	STAINLESS STEEL
47	THRUST WASHER	25% CARBON FILLED PTFE (2)
126	STOPPER PIN	A276 TYPE 304
A	LATCH LOCK	STAINLESS STEEL

NOTE

(1) Plastic covering.
(2) All valves have an anti-static thrust washer insuring positive conductivity between body and stem.

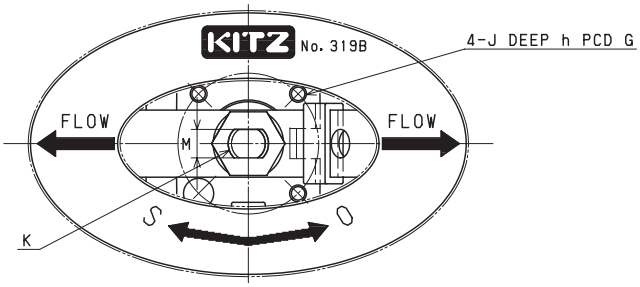

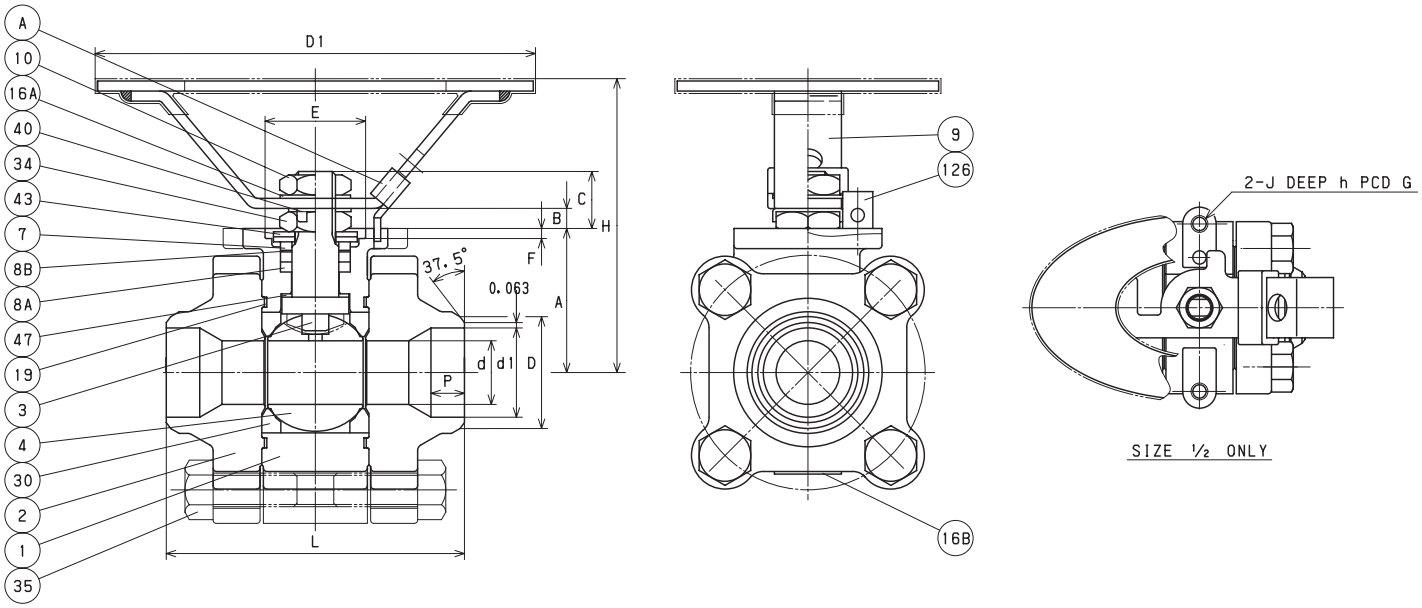

DIMENSIONS

Unit : inch

Nominal Size					Welding End			Mounting Dimensions for Actuator										
in.	d	H	D1	L	d1	D	P	A	B	C	E	F	G	J	h	K	M	ISO 5211 Flange Type
1/2	0.39	2.48	3.94	2.48	0.620	0.839	0.236	1.043	0.079	0.413	• •	• •	1.969	1/4-20UNC	0.275	M8	0.197	• •
3/4	0.55	3.07	5.12	2.76	0.825	1.051	0.276	1.378	0.169	0.559	0.984	0.118	1.417	1/4-20UNC	0.197	M10	0.236	F03
1	0.75	3.43	5.12	3.50	1.049	1.315	0.394	1.693	0.197	0.669	1.181	0.118	1.654	1/4-20UNC	0.315	M12	0.335	F04

BWSC3THZM-FS
CODE NO. 319B

MATERIAL LIST

No.	Name of Parts	Materials
1	BODY	A216 Gr. WCB
2	CAP	A216 Gr. WCB
3	STEM	A276 TYPE 316
4	BALL	A276 TYPE 316 or A351 Gr. CF8M
7	GLAND	A276 TYPE 316
8 A	GLAND PACKING	FLEXIBLE GRAPHITE
8 B	SPACER PACKING	G/F PTFE
9	HANDLE	A276 TYPE 430 (1)
10	HANDLE NUT	A194 Gr. 8
16 A	WASHER	STAINLESS STEEL
16 B	NAME PLATE	STAINLESS STEEL
19	GASKET	FLEXIBLE GRAPHITE
30	BALL SEAT	HYPATITE PTFE
34	GLAND NUT	A194 Gr. 8
35	CAP BOLT	A193 Gr. B8
40	LOCK PLATE	STAINLESS STEEL
43	CONED DISC SPRING	STAINLESS STEEL
47	THRUST WASHER	25% CARBON FILLED PTFE (2)
126	STOPPER PIN	A276 TYPE 304
A	LATCH LOCK	STAINLESS STEEL

NOTE

(1) Plastic covering.
(2) All valves have an anti-static thrust washer insuring positive conductivity between body and stem.

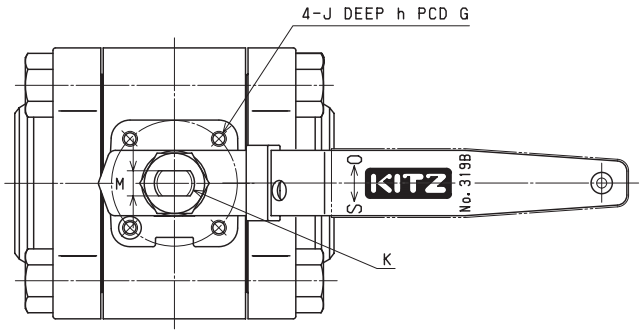

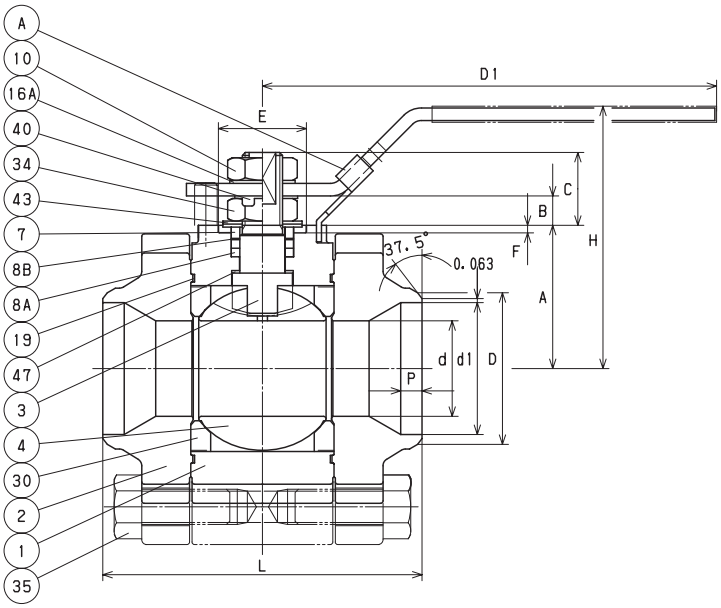

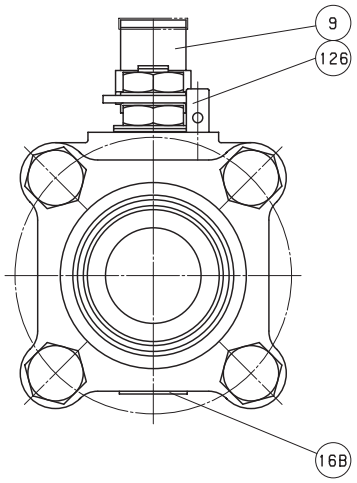

DIMENSIONS

Unit : inch

Nominal Size					Welding End			Mounting Dimensions for Actuator										
in.	d	H	D1	L	d1	D	P	A	B	C	E	F	G	J	h	K	M	ISO 5211 Flange Type
1 1/4	0.94	3.23	5.91	4.06	1.381	1.661	0.236	1.732	0.531	1.083	1.181	0.118	1.654	1/4-20UNC	0.315	M14	0.394	F04
1 1/2	1.18	3.46	5.91	4.33	1.616	1.902	0.315	1.949	0.531	1.071	1.181	0.118	1.654	1/4-20UNC	0.315	M14	0.394	F04
2	1.50	4.09	7.09	5.00	2.066	2.374	0.335	2.244	0.461	1.142	1.378	0.118	1.969	1/4-20UNC	0.394	M16	0.394	F05

BWSC3THZM-FS
CODE NO. 319B

MATERIAL LIST

No.	Name of Parts	Materials
1	BODY	A216 Gr. WCB
2	CAP	A216 Gr. WCB
3	STEM	A276 TYPE 316
4	BALL	A351 Gr. CF8M
7	GLAND	A351 Gr. CF8
8A	GLAND PACKING	FLEXIBLE GRAPHITE
8B	SPACER PACKING	G/F PTFE
9	HANDLE	DUCTILE IRON
16	NAME PLATE	STAINLESS STEEL
19	GASKET	(2)
30	BALL SEAT	HYPATITE PTFE
35	CAP BOLT	A193 Gr. B8
36	GLAND BOLT	A193 Gr. B8
40	KEY LOCK PLATE	STAINLESS STEEL
47	THRUST WASHER	25% CARBON FILLED PTFE (1)
48	SNAP RING	STAINLESS STEEL
49	STOPPER	STAINLESS STEEL
123	HANDLE BOLT	STAINLESS STEEL
124	SPRING & PIN	A313 & A276 TYPE 316
126	STOPPER PIN	STAINLESS STEEL

NOTE

(1) All valves have an anti-static thrust washer insuring positive conductivity between body and stem.

(2) Flexible graphite with stainless foil insert.

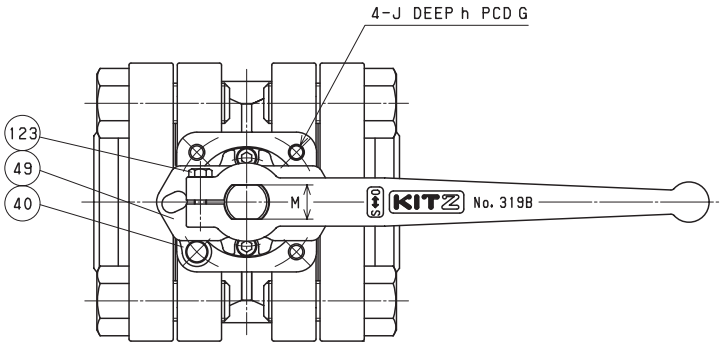

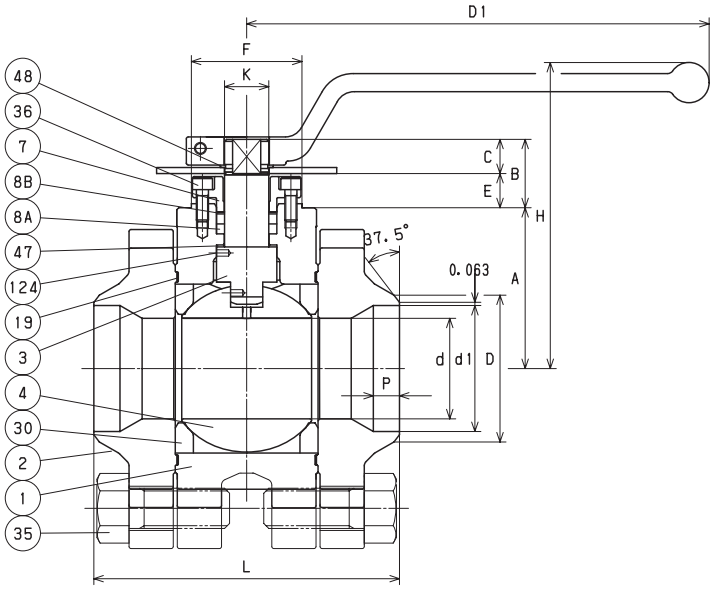

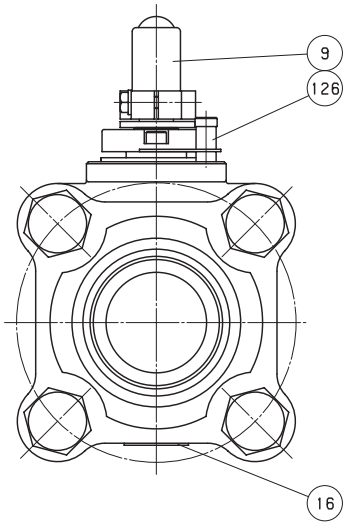

DIMENSIONS

Unit : inch

Nominal Size					Welding End			Mounting Dimensions for Actuator									
in.	d	H	D1	L	d1	D	P	A	B	C	E	F	K	G	J	h	M	ISO 5211 Flange Type
2 1/2	1.97	5.98	9.06	5.98	2.469	2.874	0.512	3.150	1.339	0.669	0.669	2.165	0.866	2.756	5/16-18UNC	0.591	0.669	F07

BWU3TFZM-O
CODE NO. 327FB-LOH

MATERIAL LIST

No.	Name of Parts	Materials
1	BODY	A351 Gr. CF8M
2	CAP	A351 Gr. CF8M
3	STEM	A276 TYPE 316
4	BALL	A276 TYPE 316 or A351 Gr. CF8M
7	GLAND	A276 TYPE 316
8	GLAND PACKING	PTFE
9	HANDLE	A276 TYPE 430 (1)
10	HANDLE NUT	A194 Gr. 8
16A	WASHER	STAINLESS STEEL
16B	NAME PLATE	STAINLESS STEEL
19	GASKET	PTFE
30	BALL SEAT	HYPATITE PTFE
34	GLAND NUT	A194 Gr. 8
35	CAP BOLT	A193 Gr. B8
40	LOCK PLATE	STAINLESS STEEL
43	CONED DISC SPRING	STAINLESS STEEL
47	THRUST WASHER	25% CARBON FILLED PTFE (2)
126	STOPPER PIN	A276 TYPE 304
A	LATCH LOCK	STAINLESS STEEL

NOTE

(1) Plastic covering.
(2) All valves have an anti-static thrust washer insuring positive conductivity between body and stem.

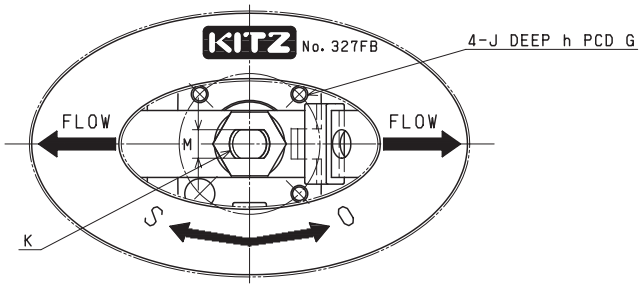

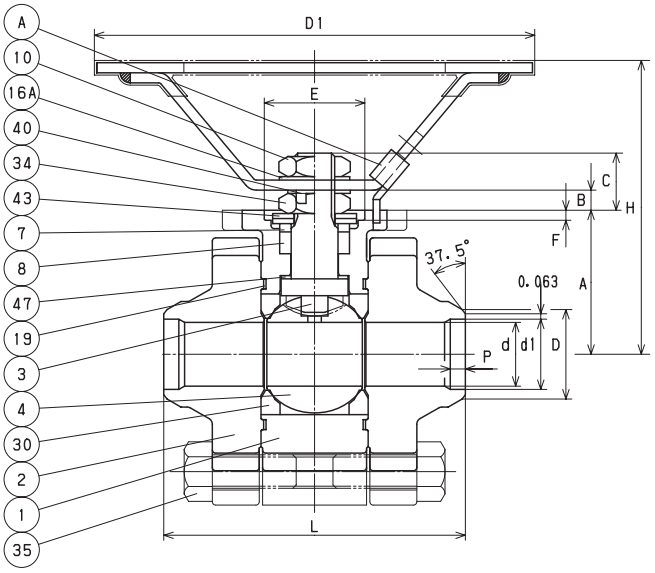

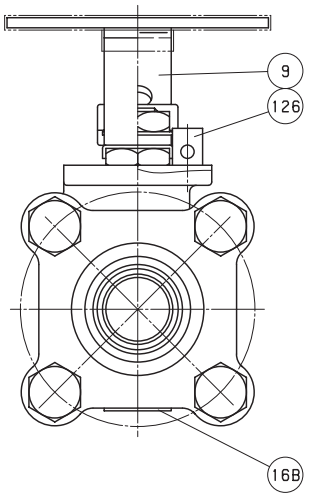

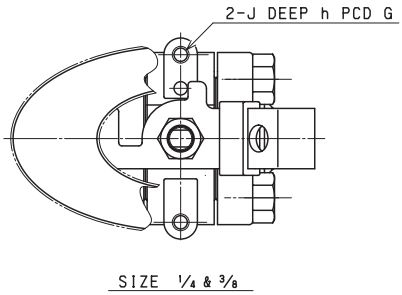

DIMENSIONS

Unit : inch

Nominal Size					Welding End			Mounting Dimensions for Actuator										
in.	d	H	D1	L	d1	D	P	A	B	C	E	F	G	J	h	K	M	ISO 5211 Flange Type
1/4	0.39	2.48	3.94	2.48	0.363	0.539	0.197	1.043	0.079	0.413	• •	• •	1.969	1/4-20UNC	0.275	M8	0.197	• •
3/8	0.39	2.48	3.94	2.48	0.491	0.673	0.197	1.043	0.079	0.413	• •	• •	1.969	1/4-20UNC	0.275	M8	0.197	• •
1/2	0.55	3.07	5.12	2.80	0.620	0.839	0.177	1.378	0.169	0.559	0.984	0.118	1.417	1/4-20UNC	0.197	M10	0.236	F03
3/4	0.75	3.43	5.12	3.54	0.825	1.051	0.177	1.693	0.197	0.669	1.181	0.118	1.654	1/4-20UNC	0.315	M12	0.335	F04

BWU3TFZM
CODE NO. 327FB

MATERIAL LIST

No.	Name of Parts	Materials
1	BODY	A351 Gr. CF8M
2	CAP	A351 Gr. CF8M
3	STEM	A276 TYPE 316
4	BALL	A276 TYPE 316 or A351 Gr. CF8M
7	GLAND	A276 TYPE 316
8	GLAND PACKING	PTFE
9	HANDLE	A276 TYPE 430 (1)
10	HANDLE NUT	A194 Gr. 8
16A	WASHER	STAINLESS STEEL
16B	NAME PLATE	STAINLESS STEEL
19	GASKET	PTFE
30	BALL SEAT	HYPATITE PTFE
34	GLAND NUT	A194 Gr. 8
35	CAP BOLT	A193 Gr. B8
40	LOCK PLATE	STAINLESS STEEL
43	CONED DISC SPRING	STAINLESS STEEL
47	THRUST WASHER	25% CARBON FILLED PTFE (2)
126	STOPPER PIN	A276 TYPE 304
A	LATCH LOCK	STAINLESS STEEL

NOTE

(1) Plastic covering.

(2) All valves have an anti-static thrust washer insuring positive conductivity between body and stem.

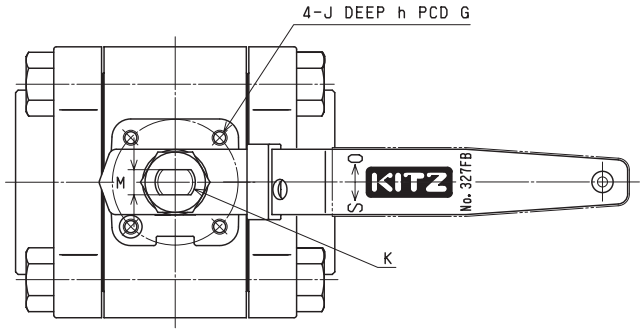

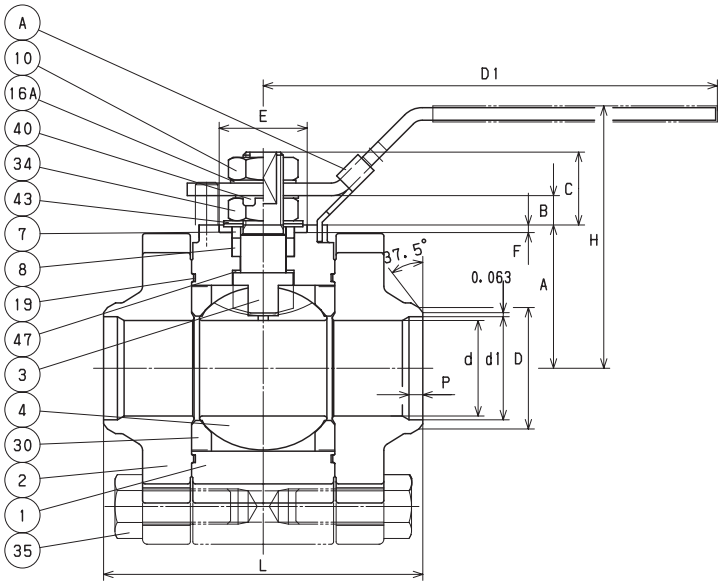

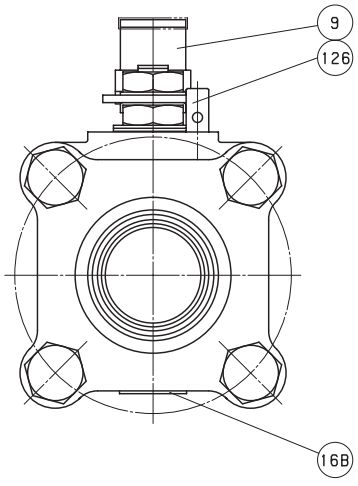

DIMENSIONS

Unit : inch

Nominal Size					Welding End			Mounting Dimensions for Actuator									
in.	d	H	D1	L	d1	D	P	A	B	C	E	F	G	J	h	K	M	ISO 5211 Flange Type
1	0.94	3.23	5.91	4.06	1.049	1.315	0.217	1.732	0.531	1.083	1.181	0.118	1.654	1/4-20UNC	0.315	M14	0.394	F04
1 1/4	1.18	3.46	5.91	4.33	1.381	1.661	0.315	1.949	0.531	1.071	1.181	0.118	1.654	1/4-20UNC	0.315	M14	0.394	F04
1 1/2	1.50	4.09	7.09	5.00	1.616	1.902	0.217	2.244	0.461	1.142	1.378	0.118	1.969	1/4-20UNC	0.394	M16	0.394	F05

BWU3TFZM
CODE NO. 327FB

MATERIAL LIST

No.	Name of Parts	Materials
1	BODY	A351 Gr. CF8M
2	CAP	A351 Gr. CF8M
3	STEM	A276 TYPE 316
4	BALL	A351 Gr. CF8M
7	GLAND	A351 Gr. CF8
8	GLAND PACKING	PTFE
9	HANDLE	DUCTILE IRON
16	NAME PLATE	STAINLESS STEEL
19	GASKET	PTFE
30	BALL SEAT	HYPATITE PTFE
35	CAP BOLT	A193 Gr. B8
36	GLAND BOLT	A193 Gr. B8
40	KEY LOCK PLATE	STAINLESS STEEL
47	THRUST WASHER	25% CARBON FILLED PTFE (1)
48	SNAP RING	STAINLESS STEEL
49	STOPPER	STAINLESS STEEL
123	HANDLE BOLT	STAINLESS STEEL
124	SPRING & PIN	A313 & A276 TYPE 316
126	STOPPER PIN	STAINLESS STEEL

NOTE

(1) All valves have an anti-static thrust washer insuring positive conductivity between body and stem.

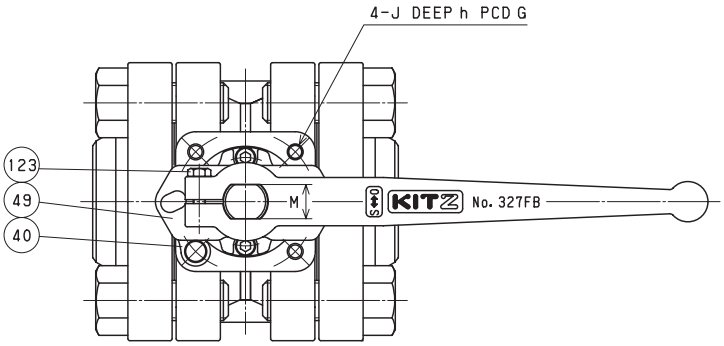

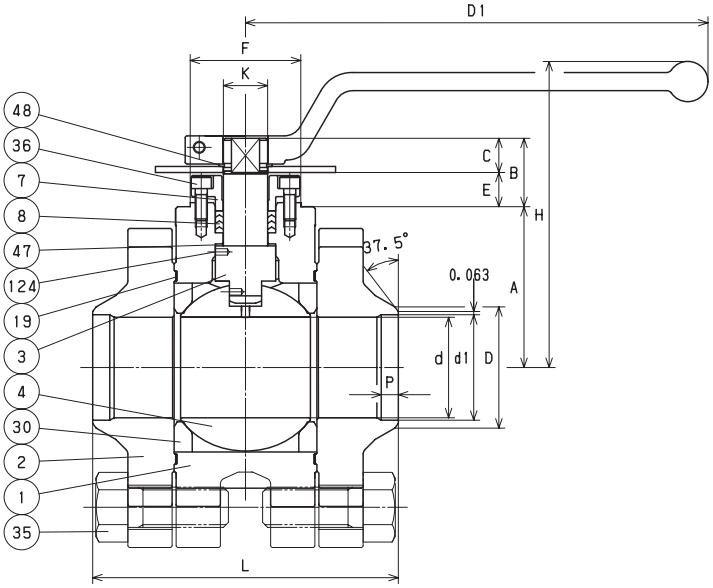

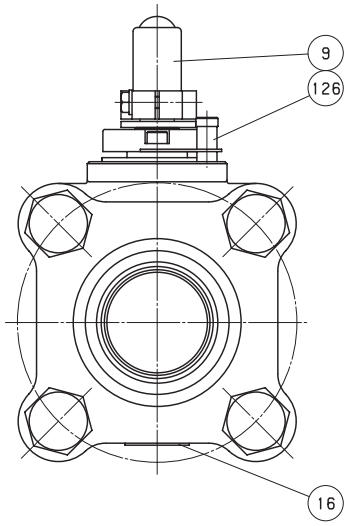

DIMENSIONS

Unit : inch

Nominal Size					Welding End			Mounting Dimensions for Actuator									
in.	d	H	D1	L	d1	D	P	A	B	C	E	F	K	G	J	h	M	ISO 5211 Flange Type
2	1.97	5.98	9.06	5.98	2.067	2.374	0.335	3.150	1.339	0.669	0.669	2.165	0.866	2.756	5/16-18UNC	0.591	0.669	F07

BWU3THZM
CODE NO. 327B-LOH

MATERIAL LIST

No.	Name of Parts	Materials
1	BODY	A351 Gr. CF8M
2	CAP	A351 Gr. CF8M
3	STEM	A276 TYPE 316
4	BALL	A276 TYPE 316 or A351 Gr. CF8M
7	GLAND	A276 TYPE 316
8	GLAND PACKING	PTFE
9	HANDLE	A276 TYPE 430 (1)
10	HANDLE NUT	A194 Gr. 8
16A	WASHER	STAINLESS STEEL
16B	NAME PLATE	STAINLESS STEEL
19	GASKET	PTFE
30	BALL SEAT	HYPATITE PTFE
34	GLAND NUT	A194 Gr. 8
35	CAP BOLT	A193 Gr. B8
40	LOCK PLATE	STAINLESS STEEL
43	CONED DISC SPRING	STAINLESS STEEL
47	THRUST WASHER	25% CARBON FILLED PTFE (2)
126	STOPPER PIN	A276 TYPE 304
A	LATCH LOCK	STAINLESS STEEL

NOTE

(1) Plastic covering.

(2) All valves have an anti-static thrust washer insuring positive conductivity between body and stem.

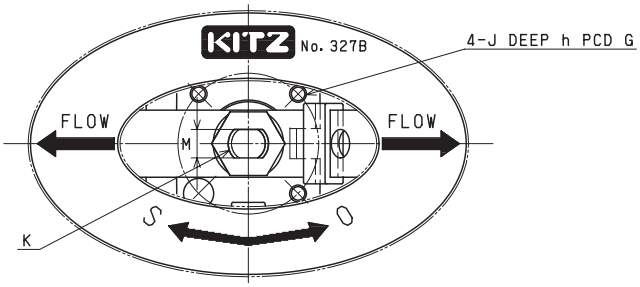

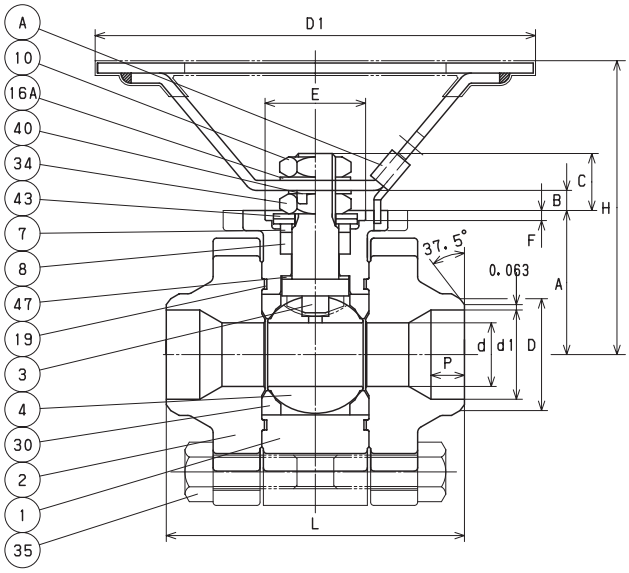

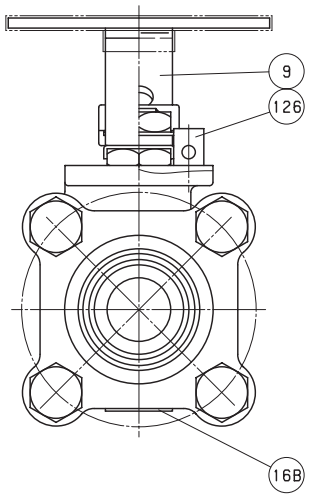

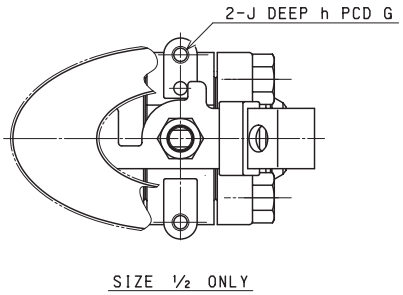

DIMENSIONS

Unit : inch

Nominal Size					Welding End			Mounting Dimensions for Actuator										
in.	d	H	D1	L	d1	D	P	A	B	C	E	F	G	J	h	K	M	ISO 5211 Flange Type
1/2	0.39	2.48	3.94	2.48	0.620	0.839	0.236	1.043	0.079	0.413	• •	• •	1.969	1/4-20UNC	0.275	M8	0.197	• •
3/4	0.55	3.07	5.12	2.76	0.825	1.051	0.276	1.378	0.169	0.559	0.984	0.118	1.417	1/4-20UNC	0.197	M10	0.236	F03
1	0.75	3.43	5.12	3.50	1.049	1.315	0.394	1.693	0.197	0.669	1.181	0.118	1.654	1/4-20UNC	0.315	M12	0.335	F04

BWU3THZM
CODE NO. 327B

MATERIAL LIST

No.	Name of Parts	Materials
1	BODY	A351 Gr. CF8M
2	CAP	A351 Gr. CF8M
3	STEM	A276 TYPE 316
4	BALL	A276 TYPE 316 or A351 Gr. CF8M
7	GLAND	A276 TYPE 316
8	GLAND PACKING	PTFE
9	HANDLE	A276 TYPE 430 (1)
10	HANDLE NUT	A194 Gr. 8
16 A	WASHER	STAINLESS STEEL
16 B	NAME PLATE	STAINLESS STEEL
19	GASKET	PTFE
30	BALL SEAT	HYPATITE PTFE
34	GLAND NUT	A194 Gr. 8
35	CAP BOLT	A193 Gr. B8
40	LOCK PLATE	STAINLESS STEEL
43	CONED DISC SPRING	STAINLESS STEEL
47	THRUST WASHER	25% CARBON FILLED PTFE (2)
126	STOPPER PIN	A276 TYPE 304
A	LATCH LOCK	STAINLESS STEEL

NOTE

(1) Plastic covering.

(2) All valves have an anti-static thrust washer insuring positive conductivity between body and stem.

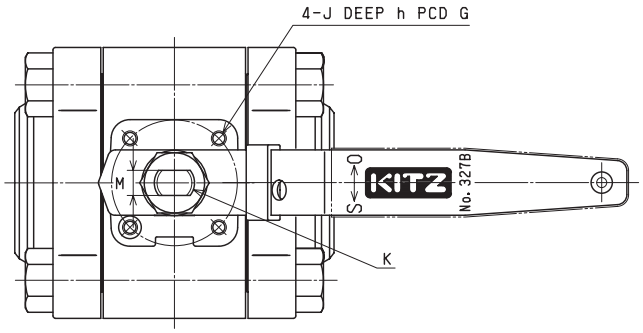

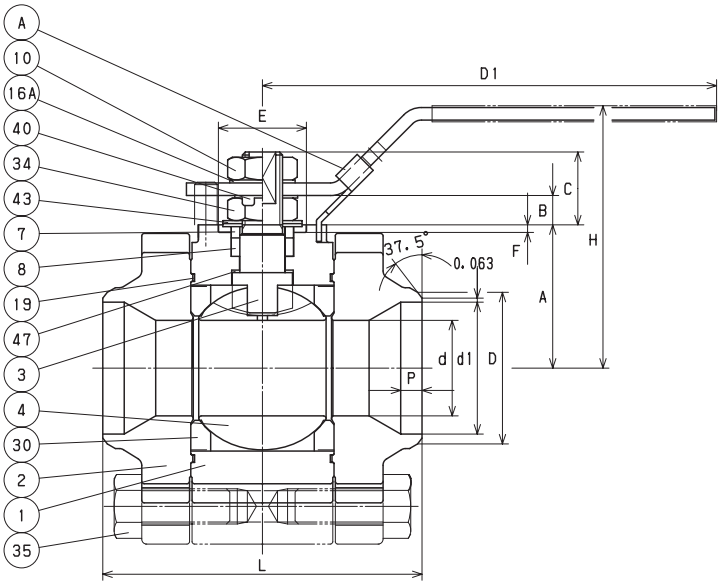

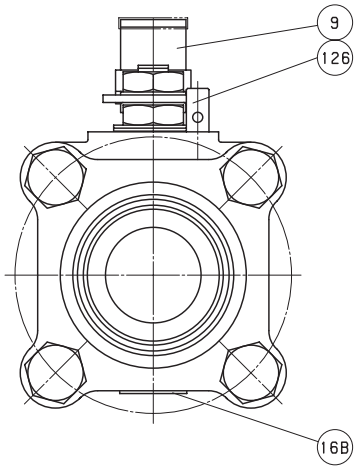

DIMENSIONS

Unit : inch

Nominal Size					Welding End			Mounting Dimensions for Actuator										
in.	d	H	D1	L	d1	D	P	A	B	C	E	F	G	J	h	K	M	ISO 5211 Flange Type
1 1/4	0.94	3.23	5.91	4.06	1.381	1.661	0.236	1.732	0.531	1.083	1.181	0.118	1.654	1/4-20UNC	0.315	M14	0.394	F04
1 1/2	1.18	3.46	5.91	4.33	1.616	1.902	0.315	1.949	0.531	1.071	1.181	0.118	1.654	1/4-20UNC	0.315	M14	0.394	F04
2	1.50	4.09	7.09	5.00	2.066	2.374	0.335	2.244	0.461	1.142	1.378	0.118	1.969	1/4-20UNC	0.394	M16	0.394	F05

BWU3THZM
CODE NO. 327B

MATERIAL LIST

No.	Name of Parts	Materials
1	BODY	A351 Gr. CF8M
2	CAP	A351 Gr. CF8M
3	STEM	A276 TYPE 316
4	BALL	A351 Gr. CF8M
7	GLAND	A351 Gr. CF8
8	GLAND PACKING	PTFE
9	HANDLE	DUCTILE IRON
16	NAME PLATE	STAINLESS STEEL
19	GASKET	PTFE
30	BALL SEAT	HYPATITE PTFE
35	CAP BOLT	A193 Gr. B8
36	GLAND BOLT	A193 Gr. B8
40	KEY LOCK PLATE	STAINLESS STEEL
47	THRUST WASHER	25% CARBON FILLED PTFE (1)
48	SNAP RING	STAINLESS STEEL
49	STOPPER	STAINLESS STEEL
123	HANDLE BOLT	STAINLESS STEEL
124	SPRING & PIN	A313 & A276 TYPE 316
126	STOPPER PIN	STAINLESS STEEL

NOTE

(1) All valves have an anti-static thrust washer insuring positive conductivity between body and stem.

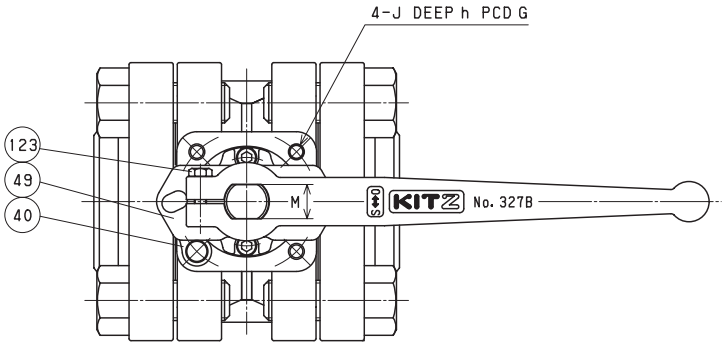

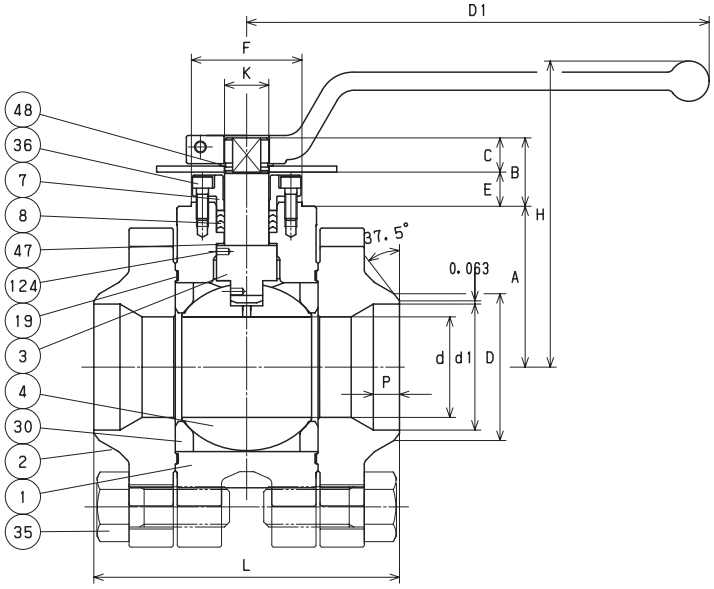

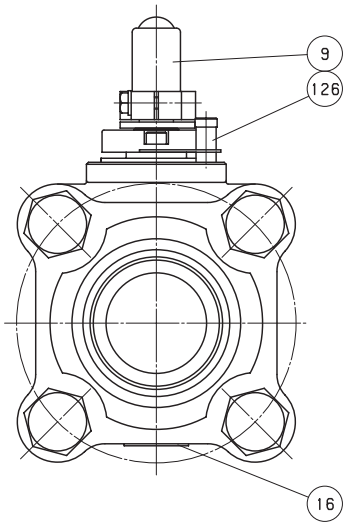

DIMENSIONS

Unit : inch

Nominal Size					Welding End			Mounting Dimensions for Actuator									
in.	d	H	D1	L	d1	D	P	A	B	C	E	F	K	G	J	h	M	ISO 5211 Flange Type
2 1/2	1.97	5.98	9.06	5.98	2.469	2.874	0.512	3.150	1.339	0.669	0.669	2.165	0.866	2.756	5/16-18UNC	0.591	0.669	F07

BWU3TFZM-FSO
CODE NO. 329FB-LOH

MATERIAL LIST

No.	Name of Parts	Materials
1	BODY	A351 Gr. CF8M
2	CAP	A351 Gr. CF8M
3	STEM	A276 TYPE 316
4	BALL	A276 TYPE 316 or A351 Gr. CF8M
7	GLAND	A276 TYPE 316
8A	GLAND PACKING	FLEXIBLE GRAPHITE
8B	SPACER PACKING	G/F PTFE
9	HANDLE	A276 TYPE 430 (1)
10	HANDLE NUT	A194 Gr.8
16A	WASHER	STAINLESS STEEL
16B	NAME PLATE	STAINLESS STEEL
19	GASKET	FLEXIBLE GRAPHITE
30	BALL SEAT	HYPATITE PTFE
34	GLAND NUT	A194 Gr. 8
35	CAP BOLT	A193 Gr. B8
40	LOCK PLATE	STAINLESS STEEL
43	CONED DISC SPRING	STAINLESS STEEL
47	THRUST WASHER	25% CARBON FILLED PTFE (2)
126	STOPPER PIN	A276 TYPE 304
A	LATCH LOCK	STAINLESS STEEL

NOTE

(1) Plastic covering.
(2) All valves have an anti-static thrust washer insuring positive conductivity between body and stem.

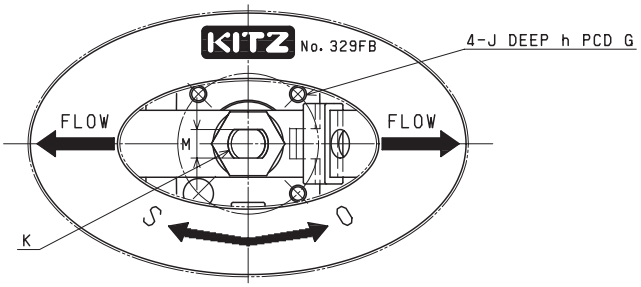

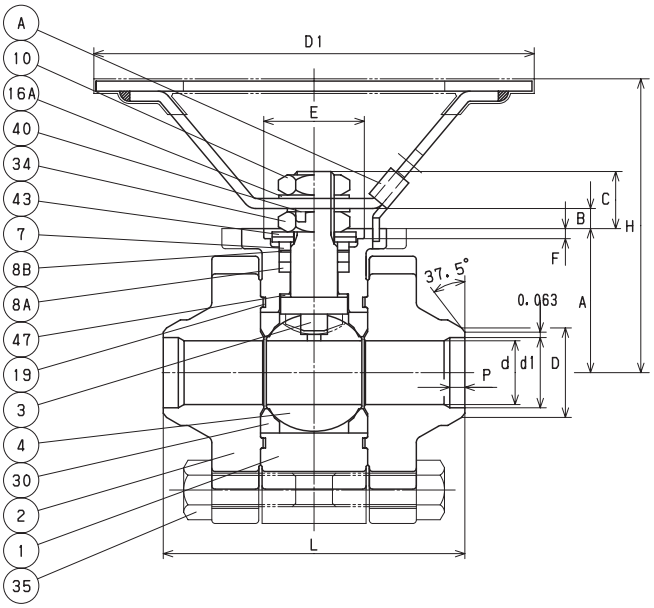

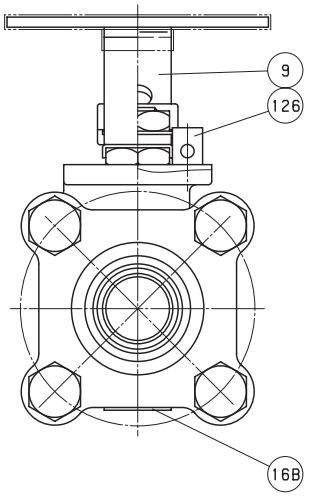

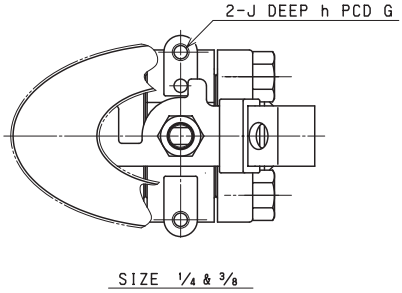

DIMENSIONS

Unit : inch

Nominal Size					Welding End			Mounting Dimensions for Actuator										
in.	d	H	D1	L	d1	D	P	A	B	C	E	F	G	J	h	K	M	ISO 5211 Flange Type
1/4	0.39	2.48	3.94	2.48	0.363	0.539	0.197	1.043	0.079	0.413	• •	• •	1.969	1/4-20UNC	0.275	M8	0.197	• •
3/8	0.39	2.48	3.94	2.48	0.491	0.673	0.197	1.043	0.079	0.413	• •	• •	1.969	1/4-20UNC	0.275	M8	0.197	• •
1/2	0.55	3.07	5.12	2.80	0.620	0.839	0.177	1.378	0.169	0.559	0.984	0.118	1.417	1/4-20UNC	0.197	M10	0.236	F03
3/4	0.75	3.43	5.12	3.54	0.825	1.051	0.177	1.693	0.197	0.669	1.181	0.118	1.654	1/4-20UNC	0.315	M12	0.335	F04

BWU3TFZM-FS
CODE NO. 329FB

MATERIAL LIST

No.	Name of Parts	Materials
1	BODY	A351 Gr. CF8M
2	CAP	A351 Gr. CF8M
3	STEM	A276 TYPE 316
4	BALL	A276 TYPE 316 or A351 Gr. CF8M
7	GLAND	A276 TYPE 316
8A	GLAND PACKING	FLEXIBLE GRAPHITE
8B	SPACER PACKING	G/F PTFE
9	HANDLE	A276 TYPE 430 (1)
10	HANDLE NUT	A194 Gr.8
16A	WASHER	STAINLESS STEEL
16B	NAME PLATE	STAINLESS STEEL
19	GASKET	FLEXIBLE GRAPHITE
30	BALL SEAT	HYPATITE PTFE
34	GLAND NUT	A194 Gr. 8
35	CAP BOLT	A193 Gr. B8
40	LOCK PLATE	STAINLESS STEEL
43	CONED DISC SPRING	STAINLESS STEEL
47	THRUST WASHER	25% CARBON FILLED PTFE (2)
126	STOPPER PIN	A276 TYPE 304
A	LATCH LOCK	STAINLESS STEEL

NOTE

(1) Plastic covering.
(2) All valves have an anti-static thrust washer insuring positive conductivity between body and stem.

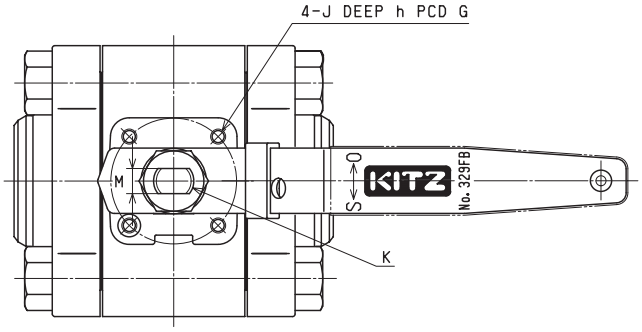

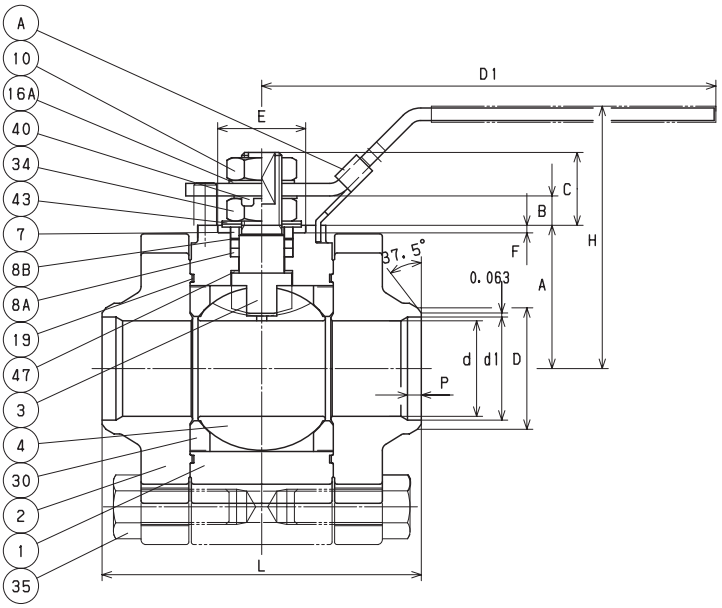

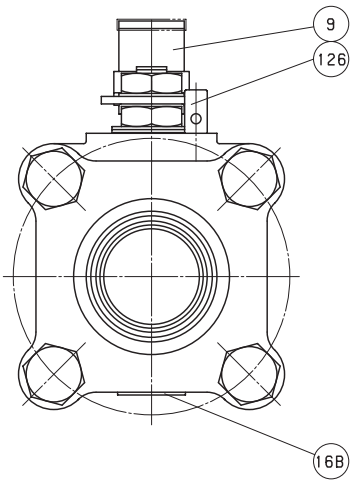

DIMENSIONS

Unit : inch

Nominal Size					Welding End			Mounting Dimensions for Actuator									
in.	d	H	D1	L	d1	D	P	A	B	C	E	F	G	J	h	K	M	ISO 5211 Flange Type
1	0.94	3.23	5.91	4.06	1.049	1.315	0.217	1.732	0.531	1.083	1.181	0.118	1.654	1/4-20UNC	0.315	M14	0.394	F04
1 1/4	1.18	3.46	5.91	4.33	1.381	1.661	0.315	1.949	0.531	1.071	1.181	0.118	1.654	1/4-20UNC	0.315	M14	0.394	F04
1 1/2	1.50	4.09	7.09	5.00	1.616	1.902	0.217	2.244	0.461	1.142	1.378	0.118	1.969	1/4-20UNC	0.394	M16	0.394	F05

BWU3TFZM-FS
CODE NO. 329FB

MATERIAL LIST

No.	Name of Parts	Materials
1	BODY	A351 Gr. CF8M
2	CAP	A351 Gr. CF8M
3	STEM	A276 TYPE 316
4	BALL	A351 Gr. CF8M
7	GLAND	A351 Gr. CF8
8A	GLAND PACKING	FLEXIBLE GRAPHITE
8B	SPACER PACKING	G/F PTFE
9	HANDLE	DUCTILE IRON
16	NAME PLATE	STAINLESS STEEL
19	GASKET	(2)
30	BALL SEAT	HYPATITE PTFE
35	CAP BOLT	A193 Gr. B8
36	GLAND BOLT	A193 Gr. B8
40	KEY LOCK PLATE	STAINLESS STEEL
47	THRUST WASHER	25% CARBON FILLED PTFE (1)
48	SNAP RING	STAINLESS STEEL
49	STOPPER	STAINLESS STEEL
123	HANDLE BOLT	STAINLESS STEEL
124	SPRING & PIN	A313 & A276 TYPE 316
126	STOPPER PIN	STAINLESS STEEL

NOTE

(1) All valves have an anti-static thrust washer insuring positive conductivity between body and stem.

(2) Flexible graphite with stainless foil insert.

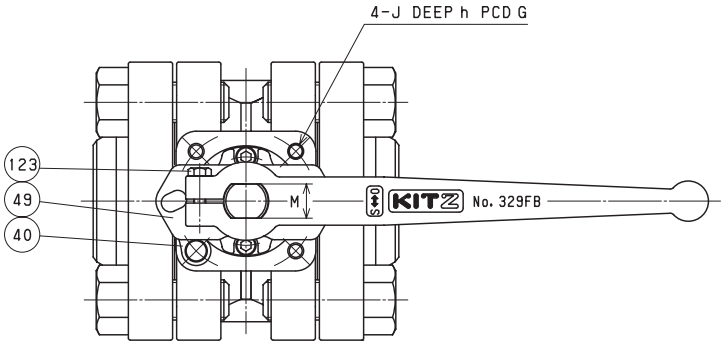

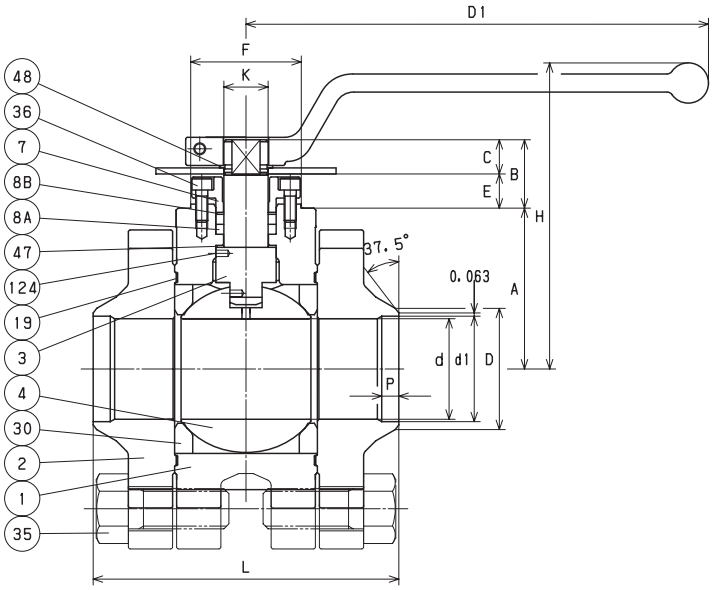

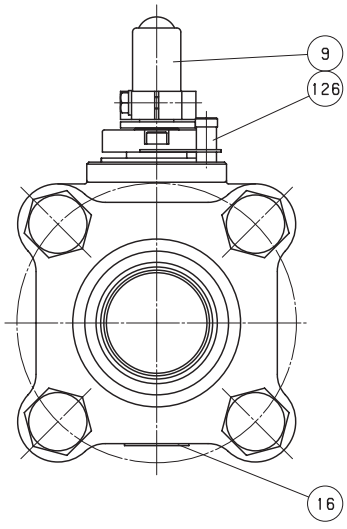

DIMENSIONS

Unit : inch

Nominal Size					Welding End			Mounting Dimensions for Actuator									
in.	d	H	D1	L	d1	D	P	A	B	C	E	F	K	G	J	h	M	ISO 5211 Flange Type
2	1.97	5.98	9.06	5.98	2.067	2.374	0.335	3.150	1.339	0.669	0.669	2.165	0.866	2.756	5/16-18UNC	0.591	0.669	F07

BWU3THZM-FSO
CODE NO. 329B-LOH

MATERIAL LIST

No.	Name of Parts	Materials
1	BODY	A351 Gr. CF8M
2	CAP	A351 Gr. CF8M
3	STEM	A276 TYPE 316
4	BALL	A276 TYPE 316 or A351 Gr. CF8M
7	GLAND	A276 TYPE 316
8A	GLAND PACKING	FLEXIBLE GRAPHITE
8B	SPACER PACKING	G/F PTFE
9	HANDLE	A276 TYPE 430 (1)
10	HANDLE NUT	A194 Gr. 8
16A	WASHER	STAINLESS STEEL
16B	NAME PLATE	STAINLESS STEEL
19	GASKET	FLEXIBLE GRAPHITE
30	BALL SEAT	HYPATITE PTFE
34	GLAND NUT	A194 Gr. 8
35	CAP BOLT	A193 Gr. B8
40	LOCK PLATE	STAINLESS STEEL
43	CONED DISC SPRING	STAINLESS STEEL
47	THRUST WASHER	25% CARBON FILLED PTFE (2)
126	STOPPER PIN	A276 TYPE 304
A	LATCH LOCK	STAINLESS STEEL

NOTE

(1) Plastic covering.
(2) All valves have an anti-static thrust washer insuring positive conductivity between body and stem.

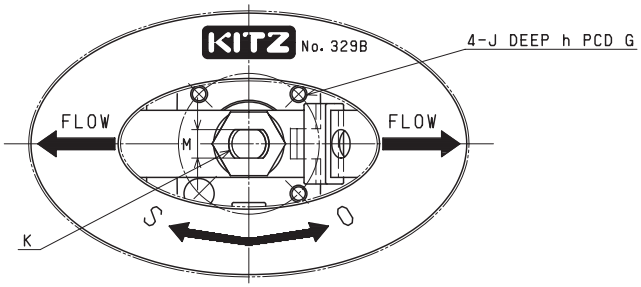

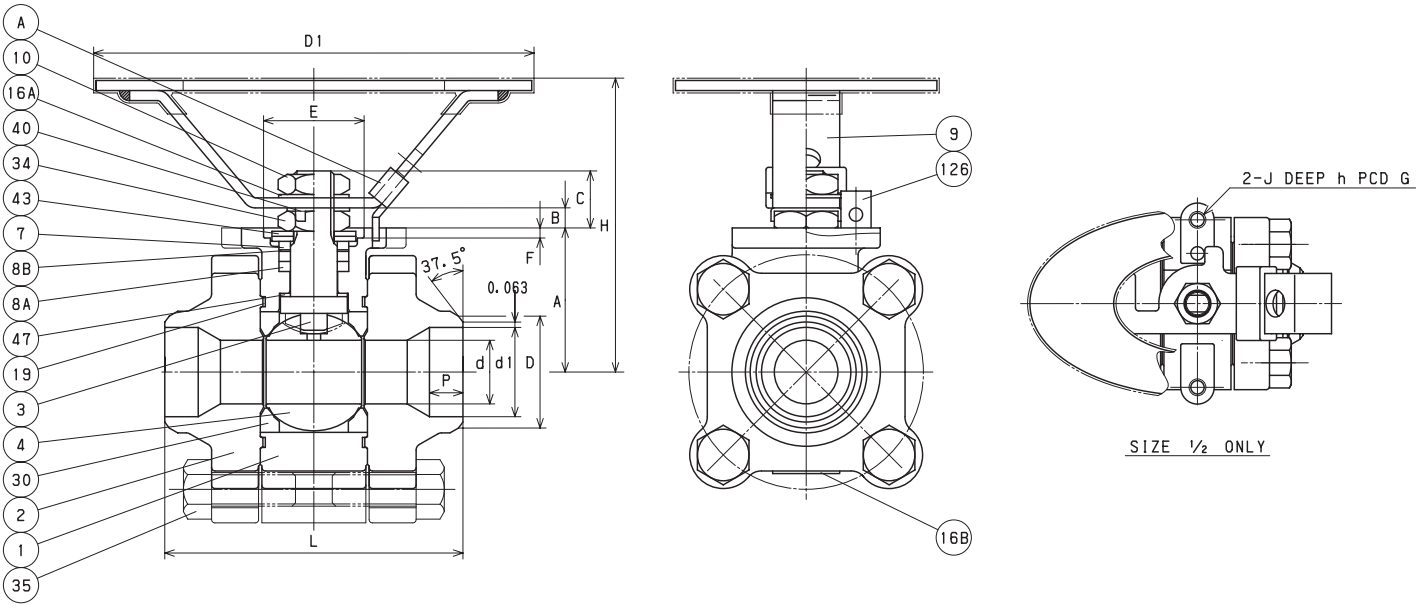

DIMENSIONS

Unit : inch

Nominal Size					Welding End			Mounting Dimensions for Actuator									
in.	d	H	D1	L	d1	D	P	A	B	C	E	F	G	J	h	K	M	ISO 5211 Flange Type
1/2	0.39	2.48	3.94	2.48	0.620	0.839	0.236	1.043	0.079	0.413	• •	• •	1.969	1/4-20UNC	0.275	M8	0.197	• •
3/4	0.55	3.07	5.12	2.76	0.825	1.051	0.276	1.378	0.169	0.559	0.984	0.118	1.417	1/4-20UNC	0.197	M10	0.236	F03
1	0.75	3.43	5.12	3.50	1.049	1.315	0.394	1.693	0.197	0.669	1.181	0.118	1.654	1/4-20UNC	0.315	M12	0.335	F04

BWU3THZM-FS
CODE NO. 329B

MATERIAL LIST

No.	Name of Parts	Materials
1	BODY	A351 Gr. CF8M
2	CAP	A351 Gr. CF8M
3	STEM	A276 TYPE 316
4	BALL	A276 TYPE 316 or A351 Gr. CF8M
7	GLAND	A276 TYPE 316
8 A	GLAND PACKING	FLEXIBLE GRAPHITE
8 B	SPACER PACKING	G/F PTFE
9	HANDLE	A276 TYPE 430 (1)
10	HANDLE NUT	A194 Gr. 8
16 A	WASHER	STAINLESS STEEL
16 B	NAME PLATE	STAINLESS STEEL
19	GASKET	FLEXIBLE GRAPHITE
30	BALL SEAT	HYPATITE PTFE
34	GLAND NUT	A194 Gr. 8
35	CAP BOLT	A193 Gr. B8
40	LOCK PLATE	STAINLESS STEEL
43	CONED DISC SPRING	STAINLESS STEEL
47	THRUST WASHER	25% CARBON FILLED PTFE (2)
126	STOPPER PIN	A276 TYPE 304
A	LATCH LOCK	STAINLESS STEEL

NOTE

(1) Plastic covering.
(2) All valves have an anti-static thrust washer insuring positive conductivity between body and stem.

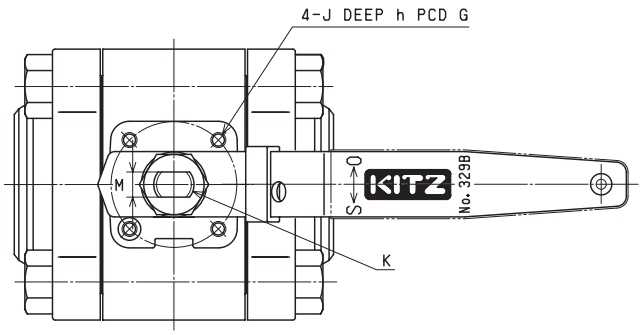

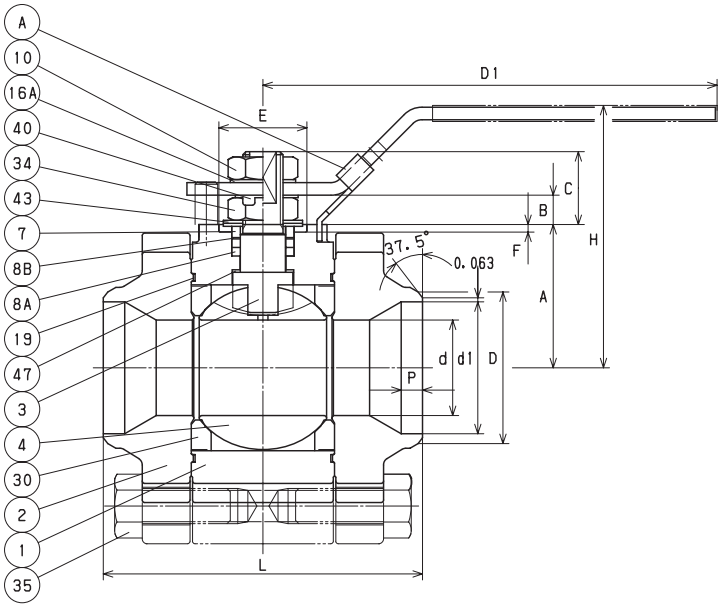

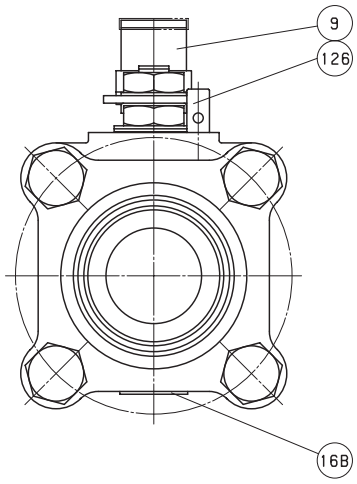

DIMENSIONS

Unit : inch

Nominal Size					Welding End			Mounting Dimensions for Actuator										
in.	d	H	D1	L	d1	D	P	A	B	C	E	F	G	J	h	K	M	ISO 5211 Flange Type
1 1/4	0.94	3.23	5.91	4.06	1.381	1.661	0.236	1.732	0.531	1.083	1.181	0.118	1.654	1/4-20UNC	0.315	M14	0.394	F04
1 1/2	1.18	3.46	5.91	4.33	1.616	1.902	0.315	1.949	0.531	1.071	1.181	0.118	1.654	1/4-20UNC	0.315	M14	0.394	F04
2	1.50	4.09	7.09	5.00	2.066	2.374	0.335	2.244	0.461	1.142	1.378	0.118	1.969	1/4-20UNC	0.394	M16	0.394	F05

BWU3THZM-FS
CODE NO. 329B

MATERIAL LIST

No.	Name of Parts	Materials
1	BODY	A351 Gr. CF8M
2	CAP	A351 Gr. CF8M
3	STEM	A276 TYPE 316
4	BALL	A351 Gr. CF8M
7	GLAND	A351 Gr. CF8
8A	GLAND PACKING	FLEXIBLE GRAPHITE
8B	SPACER PACKING	G/F PTFE
9	HANDLE	DUCTILE IRON
16	NAME PLATE	STAINLESS STEEL
19	GASKET	(2)
30	BALL SEAT	HYPATITE PTFE
35	CAP BOLT	A193 Gr. B8
36	GLAND BOLT	A193 Gr. B8
40	KEY LOCK PLATE	STAINLESS STEEL
47	THRUST WASHER	25% CARBON FILLED PTFE (1)
48	SNAP RING	STAINLESS STEEL
49	STOPPER	STAINLESS STEEL
123	HANDLE BOLT	STAINLESS STEEL
124	SPRING & PIN	A313 & A276 TYPE 316
126	STOPPER PIN	STAINLESS STEEL

NOTE

(1) All valves have an anti-static thrust washer insuring positive conductivity between body and stem.

(2) Flexible graphite with stainless foil insert.

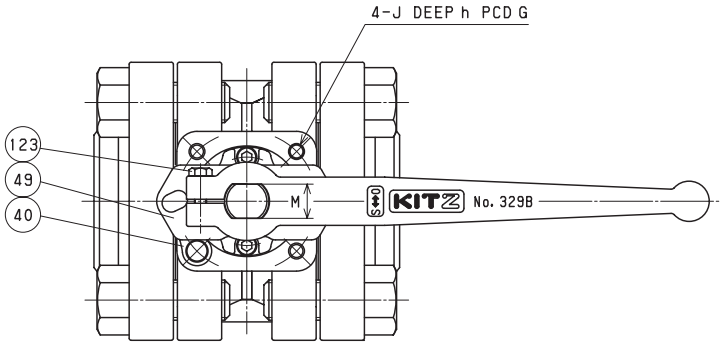

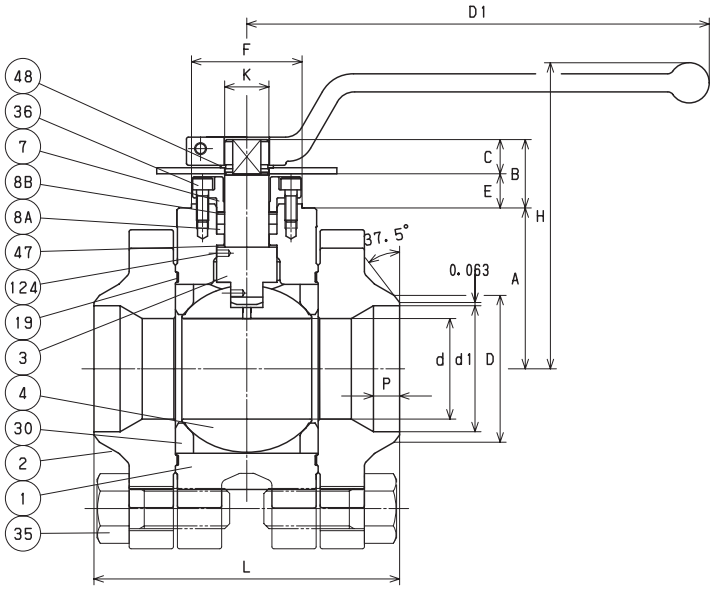

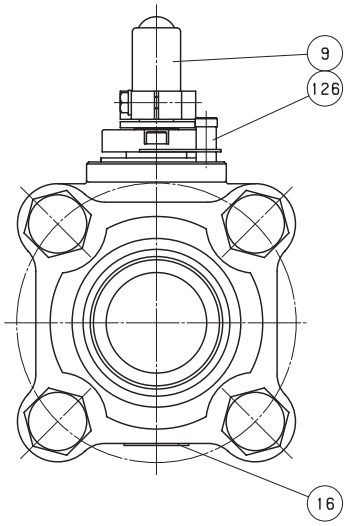

DIMENSIONS

Unit : inch

Nominal Size					Welding End			Mounting Dimensions for Actuator									
in.	d	H	D1	L	d1	D	P	A	B	C	E	F	K	G	J	h	M	ISO 5211 Flange Type
2 1/2	1.97	5.98	9.06	5.98	2.469	2.874	0.512	3.150	1.339	0.669	0.669	2.165	0.866	2.756	5/16-18UNC	0.591	0.669	F07

Construction and Materials

No.	Parts		Standard 150SCTBZM (C) 300SCTBZM (C)	Super-firesafe 150SCTBZM-FS (C) 300SCTBZM-FS (C)
1	BODY		A216 Gr. WCB*1	
2	BODY CAP		A216 Gr. WCB*1	
3	STEM		A276 TYPE 316*2	
4	BALL		A351 Gr.CF8M or A276 TYPE 316*2	
7	GLAND	1/2"~1"	A276 TYPE 316	
		1 1/2"& OVER	A351 Gr. CF8	
8	GLAND PACKING		PTFE	FLEXIBLE GRAPHITE
9	HANDLE*3	1/2"~1"	STAINLESS STEEL	
		1 1/2"~3"	DUCTILE IRON	
		4" & OVER	CARBON STEEL	
16	NAME PLATE		STAINLESS STEEL	
19	GASKET		PTFE	FLEXIBLE GRAPHITE
30	BALL SEAT		HYPATITE® PTFE	
33	CAP NUT		A194 Gr. 2HM	
34	GLAND NUT	1/2"~1"	STAINLESS STEEL	
35	CAP BOLT		A193 Gr. B7M	
36	GLAND BOLT		A193 Gr. B8M	
40 A	LOCK PLATE	1/2"~1"	STAINLESS STEEL	
40 B	KEY LOCK PLATE		STAINLESS STEEL	
43	CONED DISC SPRING	UP TO SIZE 1	STAINLESS STEEL	
48	SNAP RING	1 1/2" & OVER	CARBON STEEL	
49	STOPPER	1 1/2" & OVER	STAINLESS STEEL	
67	STEM BEARING	3" & OVER	G/F PTFE	
123	HANDLE BOLT	1 1/2" & OVER	STAINLESS STEEL	
124	SPRING & PIN		STAINLESS STEEL	
126	STOPPER PIN		STAINLESS STEEL	

- •Standard material configuration can be
- •applied to sour service.

*1. A352 low-temperature service materials are optionally available.
*2. CF8 or Type 304 is optionally available for balls & stems.
*3. Bar type handles are used for 6" Class 150 / 4" and 6" Class 300.
All part numbers are corresponding with those shown in valve assembly drawings.

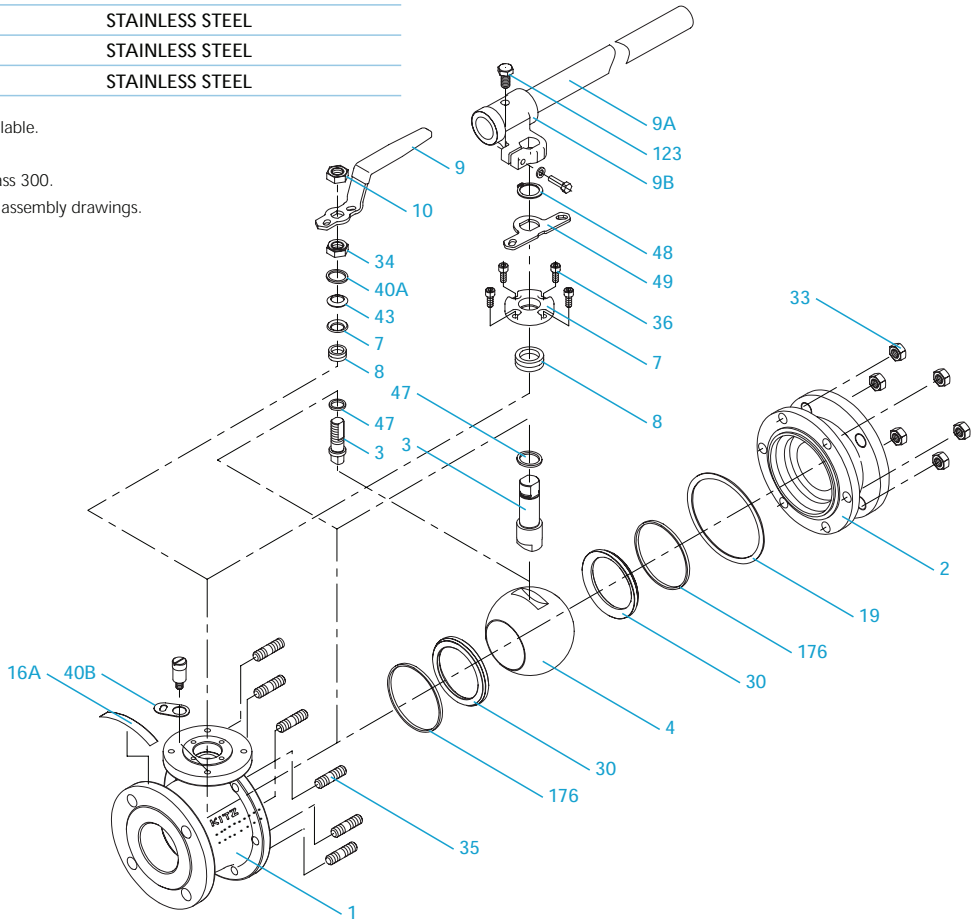

No.	Parts		Standard	Super-firesafe
			150SCTAM (C) 300SCTAM (C)	150SCTAM-FS (C) 300SCTAM-FS (C)
1	BODY		A216 Gr. WCB*1	
3	STEM	1/2"~1"	A276 TYPE 316*2	
		1 1/2"~10"	A276 TYPE 316 or A479 / A479M TYPE 316*2	
4	BALL	1/2"~1"	A276 TYPE 316	
		1 1/2"~10"	A276 TYPE 316 or A351 Gr. CF8M	
7	GLAND	1/2"~1"	A276 TYPE 316	
		1 1/2"	A276 TYPE 316 or A479 / A479M TYPE 304	
		2"~10"	A351 Gr. CF8	
8	GLAND PACKING		PTFE	FLEXIBLE GRAPHITE
9	HANDLE*3	1/2"~1"	STAINLESS STEEL	
		1 1/2"	DUCTILE IRON	
		2"~10"	CARBON STEEL	
10	HANDLE NUT	1/2"~1 1/2"	STAINLESS STEEL	
16	NAME PLATE		STAINLESS STEEL	
19 A	PRIMARY GASKET		PTFE	
19 B	SECONDARY GASKET*4		• •••	FLEXIBLE GRAPHITE
29	INSERT	1/2"~2"	A216 Gr. WCB	
		3"~6"	A105N	
		8"~10"	A216 Gr. WCB	
30	BALL SEAT		HYPATITE® PTFE	
34	GLAND NUT	1/2"~1 1/2"	STAINLESS STEEL	
36	GLAND BOLT	2" & OVER	A193 Gr. B8M	
40 A	LOCK PLATE	1/2"~1 1/2"	STAINLESS STEEL	
40 B	KEY LOCK PLATE		STAINLESS STEEL	
43	CORNED DISC SPRING	1/2"~1 1/2"	STAINLESS STEEL	
47	THRUST WASHER	1"	C/F PTFE	
		1/2"~2"	G/F PTFE	
48	SNAP RING	2" & OVER	CARBON STEEL	
49	STOPPER	2" & OVER	STAINLESS STEEL	
67	STEM BEARING	1/2"& 3/4"	C/F PTFE	
		3" & OVER	G/F PTFE	
123	HANDLE BOLT	2" & OVER	STAINLESS STEEL	
124	SPRING & PIN (RING SPRING)		STAINLESS STEEL	
126	STOPPER PIN		STAINLESS STEEL	
145	SPRING WASHER	2" & OVER	STAINLESS STEEL	

*1. A352 low-temperature service materials are optionally available.
*2. CF8 or Type 304 is optionally available for balls & stems.
*3. Bar type handles are used for 6" and larger.
*4. This part is used only for super-firesafe provision.
All part numbers are corresponding with those shown in valve assembly drawings.

- •Standard material configuration can be
- •applied to sour service.

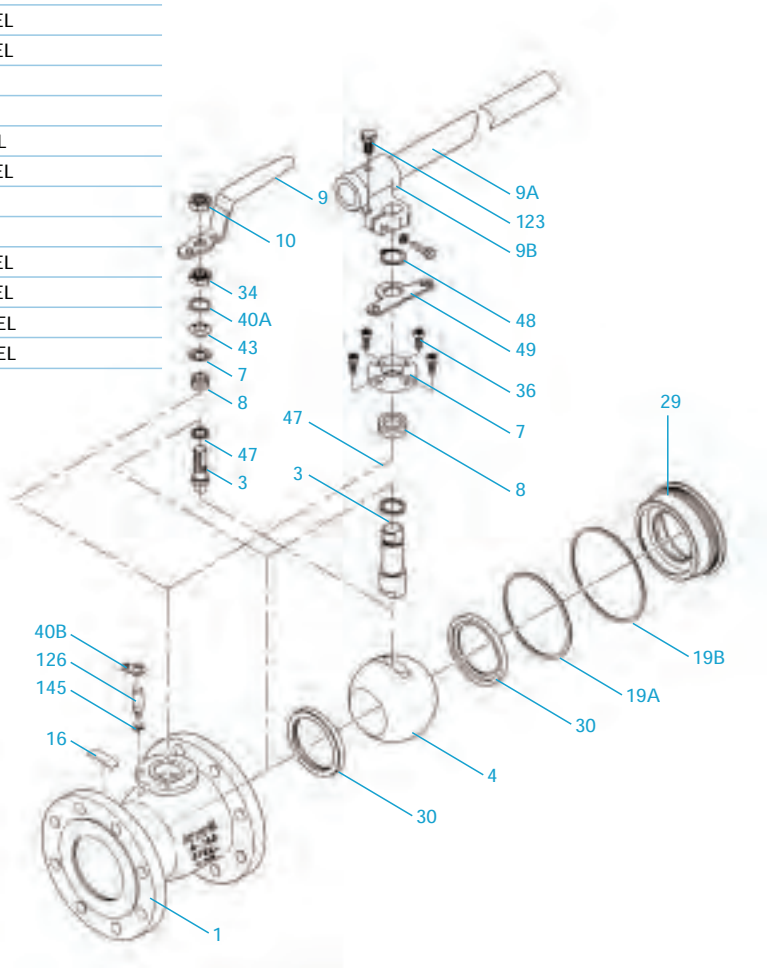

Construction and Materials

No.	Parts		Standard 150UTBZM (C) 300UTBZM (C)	Super-firesafe 150UTBZM-FS (C) 300UTBZM-FS (C)
1	BODY		A351 Gr. CF8M*1	
2	BODY CAP		A351 Gr. CF8M*1	
3	STEM		A276 TYPE 316*1	
4	BALL		A351 Gr.CF8M or A276 TYPE 316*1	
7	GLAND	1/2"~1"	A276 TYPE 316	
		1/2"& OVER	A351 Gr. CF8	
8	GLAND PACKING		PTFE	FLEXIBLE GRAPHITE
9	HANDLE*2	1/2"~1"	STAINLESS STEEL	
		1 1/2"~3"	DUCTILE IRON	
		4"& OVER	CARBON STEEL	
16	NAME PLATE		STAINLESS STEEL	
19	GASKET		PTFE	FLEXIBLE GRAPHITE
30	BALL SEAT		HYPATITE® PTFE	
33	CAP NUT		A194 Gr. 8M	
34	GLAND NUT	1/2"~1"	STAINLESS STEEL	
35	CAP BOLT		A193 Gr. B8M	
36	GLAND BOLT		A193 Gr. B8M	
40 A	LOCK PLATE	1/2"~1"	STAINLESS STEEL	
40 B	KEY LOCK PLATE		STAINLESS STEEL	
43	CONED DISC SPRING	1/2"~1"	STAINLESS STEEL	
48	SNAP RING	1 1/2"& OVER	STAINLESS STEEL	
49	STOPPER	1 1/2"& OVER	STAINLESS STEEL	
67	STEM BEARING	3"& OVER	G/F PTFE	
123	HANDLE BOLT	1 1/2"& OVER	STAINLESS STEEL	
124	SPRING & PIN		STAINLESS STEEL	
126	STOPPER PIN		STAINLESS STEEL	

- •Standard material configuration can be
- •applied to sour service.

*1. Other stainless steels are optionally available.

*2. Bar type handles are used for 6" Class 150 / 4" and 6" Class 300.

All part numbers are corresponding with those shown in valve assembly drawings.

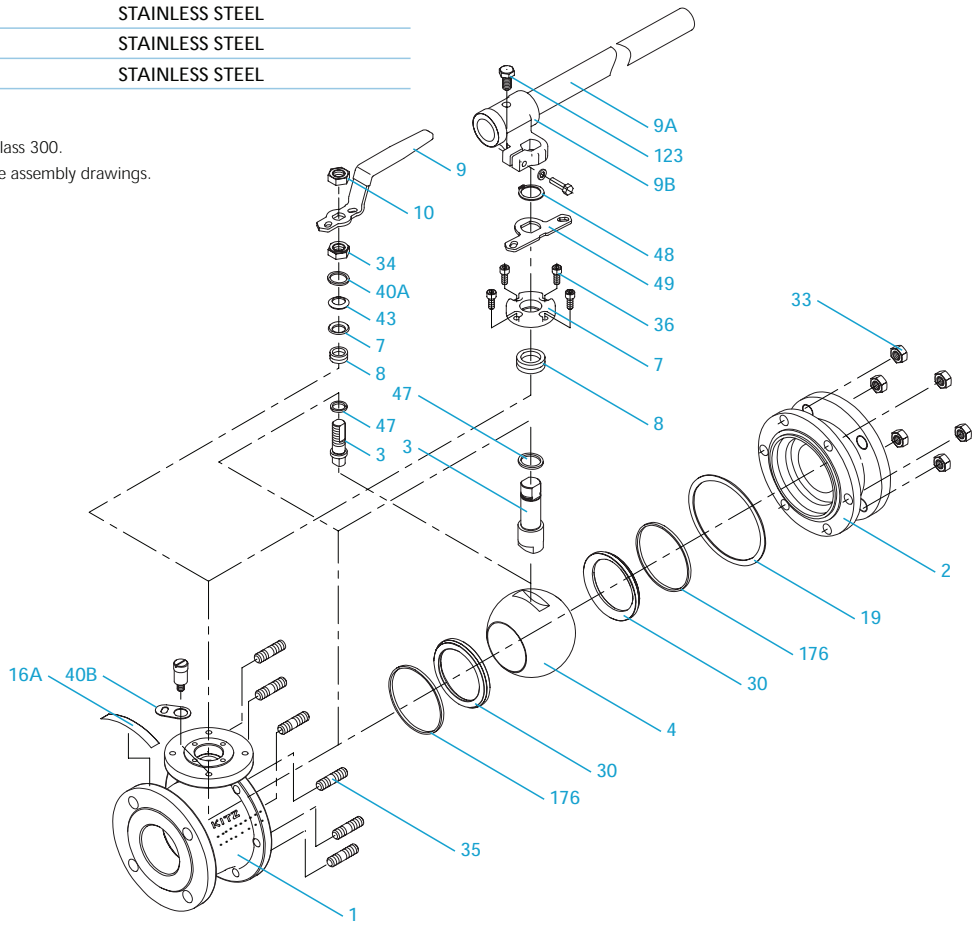

No.	Parts		Standard	Super-firesafe
			150UTAM (C) 300UTAM (C)	150UTAM-FS (C) 300UTAM-FS (C)
1	BODY		A351 Gr. CF8M	
3	STEM		A276 TYPE 316	
4	BALL		A276 TYPE 316	
7	GLAND	1/2"~1"	A276 TYPE 316	
7 A	GLAND	1 1/2"	A276 TYPE 316 or A479 / A479M TYPE 316	
7 B	GLAND	2"& OVER	A351 Gr. CF8	
8	GLAND PACKING		PTFE	FLEXIBLE GRAPHITE
9	HANDLE	1/2"~1 1/2"	STAINLESS STEEL	
		2"~4"	DUCTILE IRON	
		6"& OVER	CARBON STEEL	
10	HANDLE NUT	1/2"~1 1/2"	STAINLESS STEEL	
16	NAME PLATE		STAINLESS STEEL	
16 A	NAME PLATE		STAINLESS STEEL	
16 B	LEV PLATE		STAINLESS STEEL	
19	GASKET		PTFE	
29	INSERT	1/2"~2",8"~10"	A351 Gr. CF8M	
		3"~6"	A182 Gr. F316	
30	BALL SEAT		HYPATITE® PTFE	
34	GLAND NUT	1/2"~1 1/2"	STAINLESS STEEL	
36	GLAND BOLT	2"& OVER	A193 Gr. B8M	
40 A	LOCK PLATE	1/2"~1 1/2"	STAINLESS STEEL	
40 B	KEY LOCK PLATE		STAINLESS STEEL	
43	CONED DISC SPRING	1/2"~1 1/2"	STAINLESS STEEL	
47	THRUST WASHER	1"	C/F PTFE	
		1 1/2"& 2"	G/F PTFE	
48	SNAP RING	2"& OVER	STAINLESS STEEL	
49	STOPPER	2"& OVER	STAINLESS STEEL	
67	STEM BEARING	1/2"& 3/4"	C/F PTFE	
		3"& OVER	G/F PTFE	
123	HANDLE BOLT	2"& OVER	STAINLESS STEEL	
124	SPRING & PIN (RING SPRING)		STAINLESS STEEL	
126	STOPPER PIN		STAINLESS STEEL	
145	SPRING WASHER	1 1/2"& OVER	STAINLESS STEEL	

*1. Other stainless steels are optionally available.

*2. Bar type handles are used for 6" Class 150 / 4" and 6" Class 300.

All part numbers are corresponding with those shown in valve assembly drawings.

- •Standard material configuration can be
- •applied to sour service.

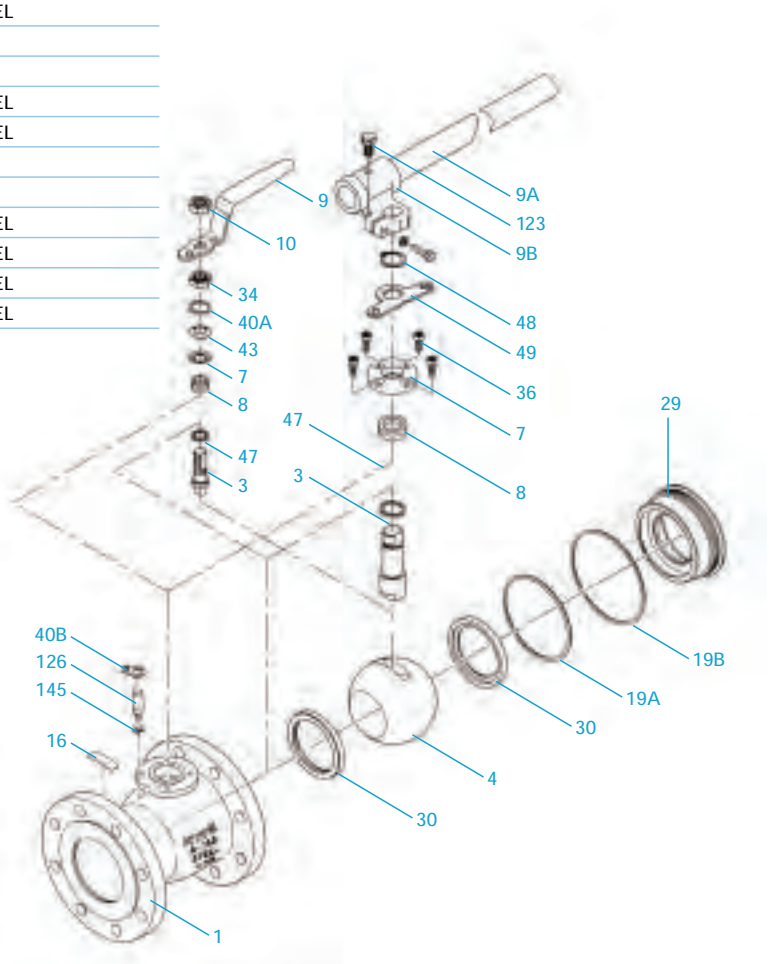

Construction and Materials

No.	Parts	Standard	Super-firesafe
		600SCTBM	600SCTBM-FS
1	BODY	A105*1	
2	BODY CAP	A105*1	
3	STEM	A276 TYPE 304*2	
4	BALL	A276 TYPE 304*2	
7	GLAND	A351 Gr. CF8	
8	GLAND PACKING	PTFE	FLEXIBLE GRAPHITE
9	HANDLE	DUCTILE IRON	
19	GASKET	GRAFOIL SPIRAL WOUND	
20	PACKING WASHER	A276 TYPE 316	
30	BALL SEAT	G/F MoS_2 PTFE	
33	CAP NUT	A194 Gr. 2H	
35	CAP BOLT	A193 Gr. B7	
36	GLAND BOLT	ALLOY STEEL	
45 A	O RING	NBR	
45 B	O RING	NBR	
47	THRUST WASHER	METAL BACKED PTFE	
48	SNAP RING	CARBON STEEL	
49	STOPPER	STAINLESS STEEL	
67	STEM BEARING	G/F PTFE	
124 A	SPRING & PIN	A313 & A276 TYPE 316	
124 B	RING SPRING	A276 TYPE 316	
143	SEAT SPRING	A167 TYPE 304	
150	SEAT RETAINER	A105 (Zn PLATING)	
155	SPACER	PTFE	
175	RETAINER GLAND	A105 (Zinc)	
176	RETAINER PACKING	FLEXIBLE GRAPHITE	

- Standard material configuration can be
- applied to sour service.

*1. A350 low-temperature service materials are optionally available.

*2. Type 304 is optionally available for balls and stems.

*3. These parts are used only for super-firesafe provision.

All part numbers are corresponding with those shown in valve assembly drawings.

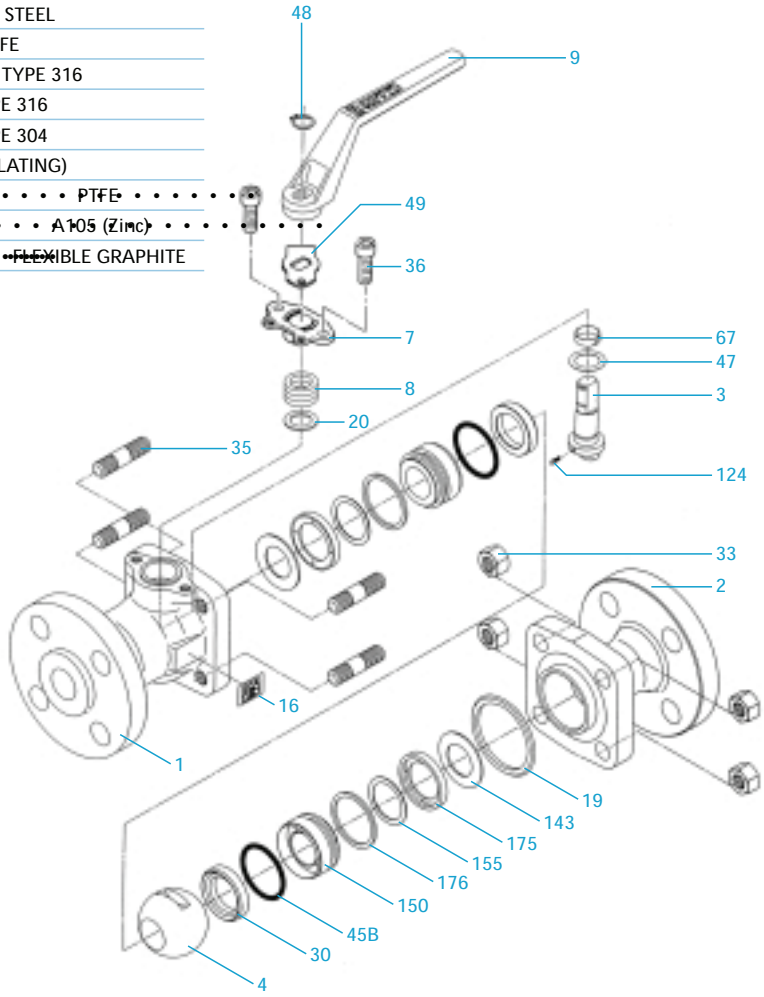

No.	Parts	Standard	Super-firesafe
		600UTBM	600UTBM-FS
1	BODY	A351 Gr. CF8M	
2	BODY CAP	A351 Gr. CF8M	
3	STEM	A276 TYPE 316	
4	BALL	A276 TYPE 316	
7	GLAND	A351 Gr. CF8	
8	GLAND PACKING	PTFE	FLEXIBLE GRAPHITE
9	HANDLE	DUCTILE IRON	
20	PACKING WASHER	A276 TYPE 316	
30	BALL SEAT	G/F MoS_2 PTFE	
33	CAP NUT	A194 Gr. 8M	
35	CAP BOLT	A193 Gr. B8M	
36	GLAND BOLT	A193 Gr. B8	
45 A	O RING	FKM	
45 B	O RING	FKM	
47	THRUST WASHER	METAL BACKED PTFE	
48	SNAP RING	A276 TYPE 304	
49	STOPPER	A276 TYPE 304	
67	STEM BEARING	G/F PTFE	
124 A	SPRING & PIN	A313 & A276 TYPE 316	
124 B	RING SPRING	A276 TYPE 316	
143	SEAT SPRING	INCONEL® X-750	
150	SEAT RETAINER	A276 TYPE 304	

*1. These parts are used only for super-firesafe provision.

*2. Other stainless steel are optionally available.

All part numbers are corresponding with those shown in valve assembly drawings.

- •Standard material configuration can be
- •applied to sour service.

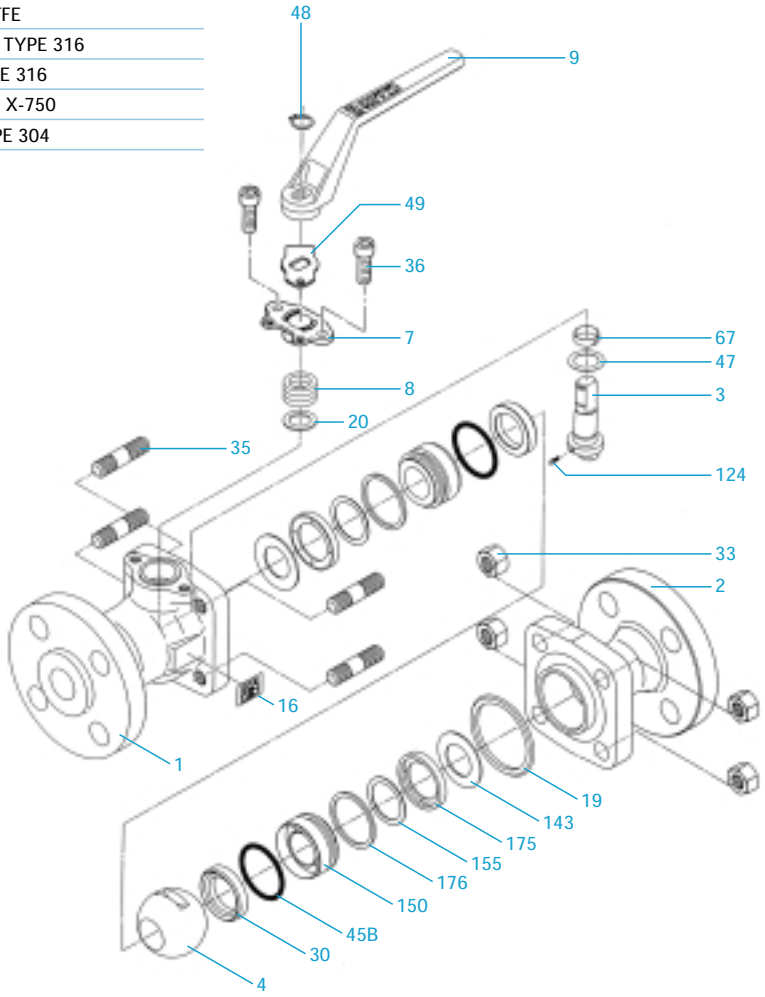

Construction and Materials

No.	Parts	Standard
		1500SCTBM
1	BODY	A216 Gr. WCB*1
2	BODY CAP	A216 Gr. WCB*1
3	STEM	A276 TYPE 304*2
4	BALL	A276 TYPE 304*2
7	GLAND	A351 Gr. CF8
8	GLAND PACKING	PTFE
9	HANDLE	DUCTILE IRON
30	BALL SEAT	MoS_2 NYLON
31	STEM WASHER	A276 TYPE 316
33	CAP NUT	A194 Gr. 2H
35	CAP BOLT	A193 Gr. B7
36	GLAND BOLT	ALLOY STEEL
45 A	O RING	NBR
45 B	O RING	NBR
47	THRUST WASHER	METAL BACKED PTFE
48	SNAP RING	CARBON STEEL
49	STOPPER	STAINLESS STEEL
67	STEM BEARING	G/F PTFE
85	PLUG	CARBON STEEL
124	SPRING & PIN	A313 & A276 TYPE 316
143	SEAT SPRING	A167 TYPE 304
146	BACK-UP RING	PTFE
150	SEAT RETAINER	A105 (Zinc)

*1. A352 low-temperature service materials are optionally available.
*2. Type 304 is optionally available for balls and stems.
*3. These parts are used only for super-firesafe provision.
All part numbers are corresponding with those shown in valve assembly drawings.

- •Standard material configuration can be
- •applied to sour service.

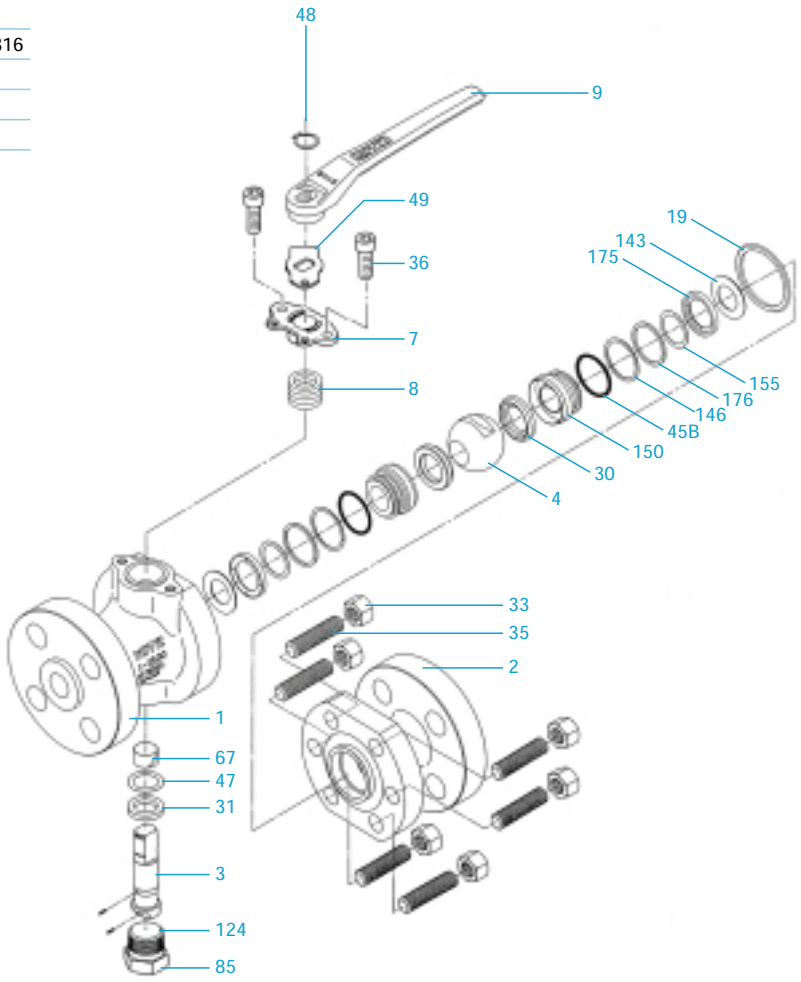

No.	Parts	Standard	Super-firesafe
		1500UTBM	1500UTBM-FS
1	BODY	A351 Gr. CF8M	
2	BODY CAP	A351 Gr. CF8M	
3	STEM	A276 TYPE 316	
4	BALL	A276 TYPE 316	
7	GLAND	A351 Gr. CF8	
8	GLAND PACKING	PTFE	FLEXIBLE GRAPHITE
9	HANDLE	DUCTILE IRON	
30	BALL SEAT	MoS_2 NYLON	
31	STEM WASHER	A276 TYPE 316	
33	CAP NUT	A194 Gr. 8	
35	CAP BOLT	A193 Gr. B8	
36	GLAND BOLT	A193 Gr. B8	
45 A	O RING	FKM	
45 B	O RING	FKM	
47	THRUST WASHER	METAL BACKED PTFE	
48	SNAP RING	A276 TYPE 304	
49	STOPPER	A276 TYPE 304	
67	STEM BEARING	G/F PTFE	
85	PLUG	A276 TYPE 316	
124	SPRING & PIN	A313 & A276 TYPE 316	
143	SEAT SPRING	INCONEL® X-750	
146	BACK-UP RING	PTFE	
150	SEAT RETAINER	A276 TYPE 316	

*1. These parts are used only for super-firesafe provision.

*2. Other stainless steel are optionally available.

All part numbers are corresponding with those shown in valve assembly drawings.

- •Standard material configuration can be
- •applied to sour service.

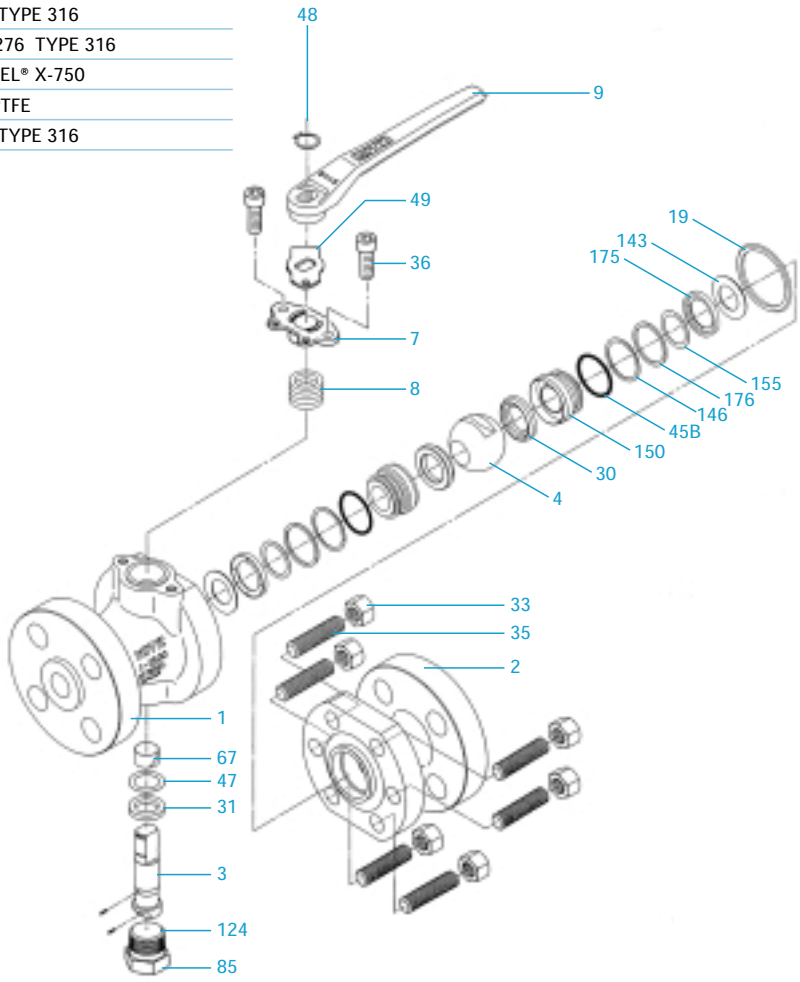

Technical Features of KITZ HYPATITE® and SWELLESS® Ball Seats

KITZ **HYPATITE®** ball seats are made of denatured PTFE, a molecularly reinforced PTFE / PFA copolymer, and specifically engineered for high sealing performance and prolonged service life of valves, in place of conventional glass-filled PTFE seats. The unique performance features are compared with those of conventional glass-filled or virgin PTFE ball seats below. With the introduction of **HYPATITE®** ball seats, glass-filled PTFE version is no longer available from KITZ Corporation, while carbon-filled or virgin PTFE seats remain available as options.

A newly developed option, KITZ **SWELLESS®** ball seats, principally made of PFA are recommended specifically for monomer service. This epoch-making new seat maximizes resistance to the permeation of monomer into its molecular structure (generally known as "swelling") which causes seat deformation and seriously affects shut-off of valves in styrene and butadiene monomer service.

Our **HYPATITE®** ball seats also out perform conventional PTFE seats with its monomer resistance feature. However, it has been verified both by laboratory and on-site tests that **SWELLESS®** seats perform much better than **HYPATITE®** seats, as they indeed deserve the name of **"SWELLESS"**, their registered trade name. Also, PFA resin, the principal material, assures the characteristic of fluorine resin such as execellent resistance characteristics to high or low temperatures, creep or compression, abrasion and general chemicals.

Table 1 and Figure 1, 2 and 3 here explain these technical features of **HYPATITE®** and **SWELLESS®** ball seats compared with conventional seat materials. For compared pressure-temperature ratings, refer to Page 9 and 10.

Table 1. Compared Technical Features of KITZ Ball Seats

Compared features	HYPATITE® or SWELLESS® seats	PTFE seats	Glass-filled PTFE seats
Heat resistance	Good		Good
Sealing performance	Good	Good	Good
Durability (Pitting-resistance)	Good		Fair
Creep and compression resistance	Good		Fair
Chemical resistance*	Good	Good	
Abrasion resistance	Good	Good	Good
Firesafe provision	Good	Good	
Throttling service	Fair	Fair	Fair
Product contamination	None	None	
Valve operating torque	Low	Low	Low

••Refer to the above body text for monomer service characteristics of SWELLESS® seats.

Fig. 1 KITZ Ball Valve Seats Compared Lab Test Results Against Gaseous Butadiene Monomer vs. Styrene Monomer

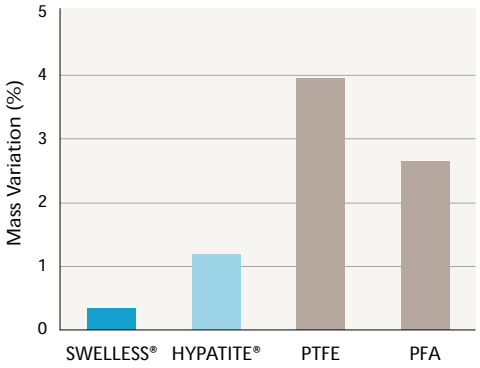

Test conditions:
Exposed to gaseous butadiene for 120 hours
119 to 122 psig
140•F to 176•F•

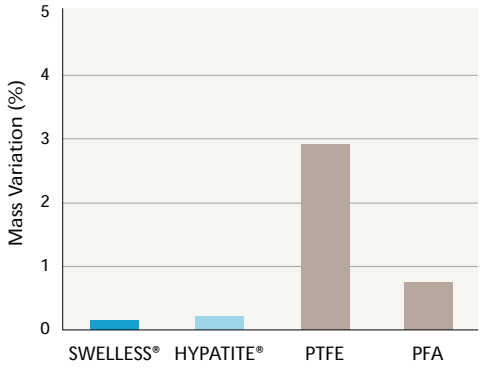

Test conditions:
Exposed to gaseous butadiene for 240 hours
2.9 to 5.8 psig
140•F to 176•F•

Fig. 2 KITZ Ball Valve Seats Compared Results of Mechanical Load Tests Ⅰ

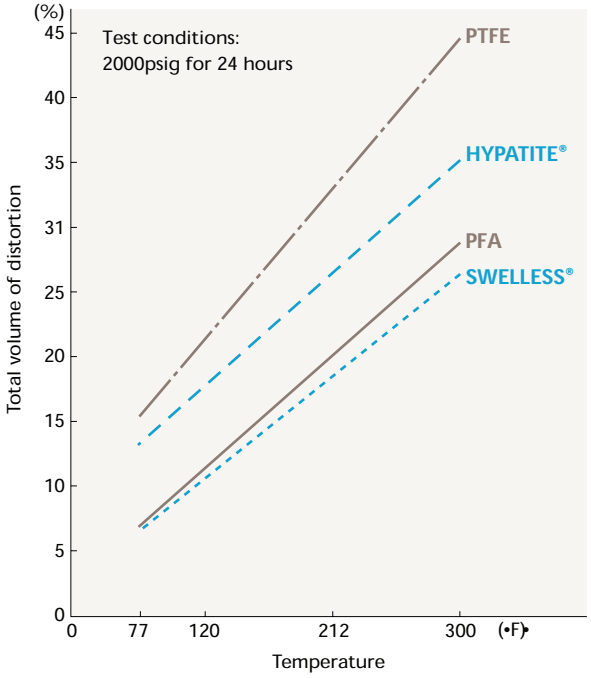

Fig. 3 KITZ Ball Valve Seats Compared Results of Mechanical Load Tests Ⅱ

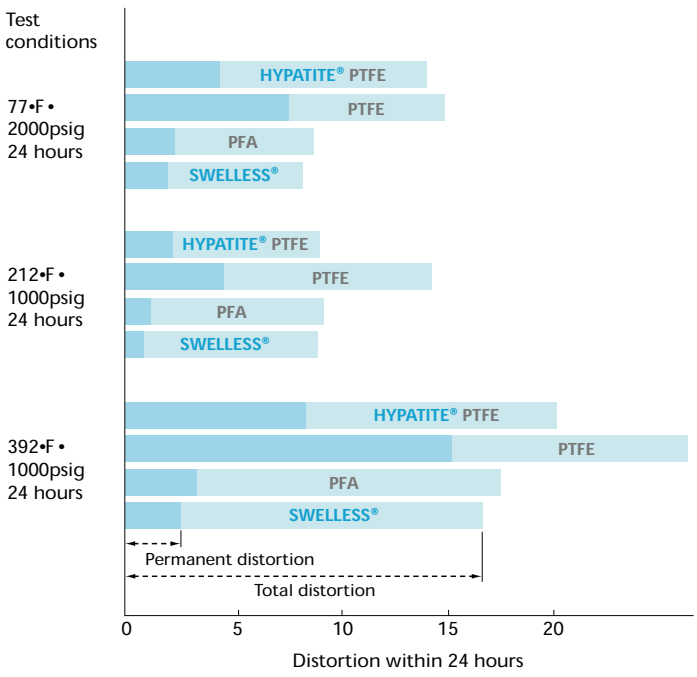

This data shows the results of some of the tests carried out at our laboratory under the specific test conditions introduced here. Variation in the type of test media, the phase of test media (gaseous or liquid), preparation of test specimen and test conditions such as pressure, temperature and duration, may cause the test results to be different from this data, but general monomer resistance levels of the seats introduced here are comparatively as exhibited in this test data.

Fire Test Standards

August 1, 2000

1. Introduction

Plant fires have become an increasingly serious concern due to the installation of a greater number of soft-seated ball and butterfly valves in place of conventional metal-seated gate and globe valves at many refineries and petrochemical plants. Extremely high temperatures usually result in decomposition or deterioration of resilient or non-metallic sealing components such as gland packing rings, O-rings and gaskets, causing leakage of line fluid which, in turn, increases the magnitude of plant fires.

To minimize the extent of damage in such a mishap, soft-seated valves are expected to have the provision for secondary metal-to-metal sealing functions to minimize external and internal (through-the-bore) leakages as well as the provision for undisturbed valve operation during or after the fire enabling emergency shut-off or release of line fluid.

Soft-seated valves may be manufactured to meet such critical fire safety requirements, if designed adequately, machined and assembled correctly, and equipped with proper sealing components.
Valves designed and manufactured in such a way may be called "firesafe valves". Manufacturers' claims of fire safety, however, remain subjective.

To verify the firesafe performance capability, the valve should be subjected to simulated plant fire conditions. API and BSI have developed technical specifications for such destructive tests, which are generally known as fire test standards. Fire tests are destructive and cost a lot to carry out due to high test expenses and bills for a third party's certification, let alone the cost of destroyed samples. Such high costs eventually prohibit repetition of fire tests. To minimize the frequency of fire tests, all existing fire test standards allow a certain range of sizes and pressure classes be qualified and certified without actual test being carried out, given that valves are designed the same and their non-metallic sealing materials are considered same as the actually tested valve.



2. History

BS 6755, Part 2, 1987 (*1) was issued to introduce, in a different form of presentation, the technical contents of **API 6FA,1985** (*2) and **API 607, 1985** (*3), with the intention of replacing the requirements of BS 5146, Part 1, 1974, Appendix A.1 (*4). Until this new British Standard was issued, technical differences between British Standard and API Standards resulted in high costs to valve manufacturers who desired to certify their products to these standard, and caused confusion amongst contractors and end-users in their evaluation of the products to be purchased.

Even within the United States, valve manufacturers, contractors and end-users used had similar difficulties because of different fire test requirements which existed between API Production Department (which is now responsible for API 6FA) and API Refining Department (which has been responsible for API 607).

Following the virtual unification of fire test requirements by API Production and Refining Departments in their latest 1985 issues, BSI finally launched a major program to adopt American standards as their own, which shall eventually help realize a globally unified fire test standard through ISO.

•1 "Testing of valves: Specification for fire type-testing requirements".
•2 "Specification for fire test for valves". (2nd edition was issued in 1994.)
•3 "Fire test for soft-seated quarter-turn valves". (4th edition issued in 1993 has nullified the qualification made according to this 3rd edition, as of May 1, 1996.)
•4 "Inspection and test of valves: Specification for steel valves for the petroleum, petrochemical and allied industries: Fire safe testing of soft seated ball valves".

3. Objective of Standardization

As high lighted by all of these standards, the fire test standard is prepared to establish test requirements which cover test procedures, performance requirements or evaluation criteria, product qualification and test certification, for the objective of technical evaluation of pressure containing capability of valves exposed to pre-determined, simulated fire conditions.

Here, the performance requirements are intended to establish limits of acceptability of valves regardless of size, nominal pressure or class rating. The burn period, or test duration, is decided on the basis that it represents the maximum time required to extinguish most plant fires. Fires of longer duration than specified in the standards shall be, therefore, considered to be of a major magnitude with consequences, or damage, greater than those anticipated in the fire tests.

For this reason, requirements for more or less stringent testing may be negotiated and established by the valve manufacturer and its customer to meet the customer's specific service applications. In fact, API 607 was subjected to a major revision in its 4th Edition issued in 1993 for more realistic test requirements.

4. Evaluation of Test Results

The maximum allowable leakage rates in these standards are determined for the defined test temperature, pressure and duration. Here it is noted that leakages under other test conditions may be substantially different. Fire test standards are prepared for just a prototype test of the valve with a size and class rating selected by the manufacturer under pre-determined test conditions assumably representing typical plant fire conditions. This can be translated to mean that test reports certified to any of these fire test standards do not necessarily verify satisfactory performance of the valves that users may purchase from the manufacturer at any given time. As already mentioned, fire test is a kind of destructive test (unlike the pressure test conducted for normal valve shipments), and no one would be willing to purchase such destructively tested valves in a commercial transaction.

It was specifically mentioned in BS 5146, 1974, Appendix A.1 that the "test is intended only as a prototype test and is intended to cover a range of sizes of valves having the same pressure rating, design details and material composition". A test report prepared by BSI for the fire test conducted on KITZ ball valves mentioned that the "report only relates to the actual ball valves which were tested and assessed. The results obtained therefore do not necessarily relate to samples from the production line and in no way imply the performance or quality of the continuing production."

The range of sizes and pressure classes to be automatically qualified by a proto type test of a valve of a certain size and rating is introduced here. Also it should be noted that potential leakage from pipe-to-valve end-connec-tion joint (either flanged, threaded or welded) cannot be evaluated by these standards, and not included in the allow-able external leakages specified. API Production Department issued a stan-dard API Bulletin 6F1 (*5), for perfor-mance evaluation of such valve end connections exposed to the fire.

*5 Bulletin on Performance of API and ASME End Connections in a Fire Test According to API Specification 6FA, 2nd Edition, Feb. 15, 1994.

Fire Test Valve Qualification (API 607-1993)

Size qualification		Pressure rating qualification	
Size of test valve (NPS)	Valve sizes qualified (NPS)	Rating of test valve (Class)	Valve ratings qualified (Class)
1/2	3/4 and smaller	150	150, 300
1	3/4, 1, 1 1/4, 1 1/2	300	300, 400, 600
2	1 1/2, 2, 2 1/2, 3	400	400, 600, 800
4	3, 4, 6	600	600, 800, 900
8	6 and larger	800	800, 900,1500
		1500	1500, 2500

General Precautions for Trouble-free Operation of Soft-seated Ball Valves

1. Excessive Cavity Pressure

Refer to Page 6. Very important

2. High-Temperature and High-Pressure Service

The pressure-temperature ratings published by manufacturers are usually considered an appropriate guide to the maximum temperature and pressure that such ball valves may withstand. KITZ recommends, however, reference to the valve distributor or manufacturer for an assurance of suitability when ball valves are to be subjected to the following conditions:

a: **Floating ball valves** are left closed for a long period of time under high temperature or high differential pressure.
b: **Floating ball valves** are operated frequently for long periods of time under high temperature or high differential pressure.
c: **Floating ball valves** are subjected to frequent change of the line pressure or service temperature.

3. Liquids with High Velocity

When ball valves must be operated frequently on liquids with very high velocity, a check should be made with the valve distributor or manufacturer for appropriate advice to minimize the possibility of seat deformation, especially when they are highly pressurized on high-temperature lines.

4. Valve Selection

Be sure to select a valve with design specifications that meet the pressure and temperature conditions required. Take special care to select the valve to be used for fluids containing abrasives, since the high molecular materials employed in the seats could suffer degradation.

5. Valve Installation

Before installing the valve, the pipe bore should be checked to confirm that no weld spatter, scale or rust particles remain inside. For mounting flanged valves, diagonally located flange bolts should be tightened evenly.

6. Degree of Valve Opeining

Soft seated ball valves should be considered as ON / OFF valves only and care should be taken to ensure that they are fully closed or open. Opening ball valves partially can result in seat erosion and cause seat leakage. Pipelines that require the use of ball valves for throttling service should be designed in consideration of the amount of the seat leakage which may occur in its fully closed position. Note that ball valves should be stored in a fully open position.

7. Valve Actuation

Two types of pneumatic valve actuator KITZ B-Series and FA-Series are available for our factory mounting. Also KITZ "KELMO" electric actuators are available. Electric actuators or pneumatic actuators of any other specified brand is also available for mounting.
If a user mounts its own actuators on KITZ ball valves, however, all users are recommended to contact KITZ or its authorized distributors for adequate technical advice, because any improper sizing of actuators may cause serious problems in the field. It must be noted that the actual value of the operating torque of any given valve may vary, depending on the service conditions listed below:

(1) Fluid
  a. Kind of fluid
  b. Line pressure
  c. Line temperature
  d. Fluid volume
(2) Ambient temperature
(3) Opening / closing degree
(4) Type of actuator
(5) Frequency and pattern of change of line pressure
(6) Frequency and pattern of change of line and ambient temperatures

8. Valve Disassembly

The line fluid should be completely removed from the internal of the valves before they are removed from the pipeline for maintenance.
Even after the line fluid has been discharged through the pipeline, some fluid is always trapped inside the body and body cavity (the room surrounded by the body, ball and two seats).
Be sure to completely discharge the pressure trapped in the body cavity, before valve disassembly.

Inspection and Warranty

Each KITZ ball valve is subjected to 100% in-house inspection designated by API 598 or BS 6755 Part 1. This includes hydrostatic shell tests and pneumatic low-pressure seat test. Manufacturer's material certificates and test reports are available upon request. Each KITZ ball valve is guaranteed for 12 months after placement in service, but not exceeding 18 months after shipment from KITZ factories.

Flow Characteristics

One of the best advantages of ball valves is that every flow per any given bore size is larger than other types of valves. Fluid is much less disturbed by eddy currents or pulsation. To obtain the figure of flow per valve opening, simply multiply the flow rate (%) given here by the corresponding value given in the table of Pressure Loss vs. Flow Rate.

Valve opening vs flow rate

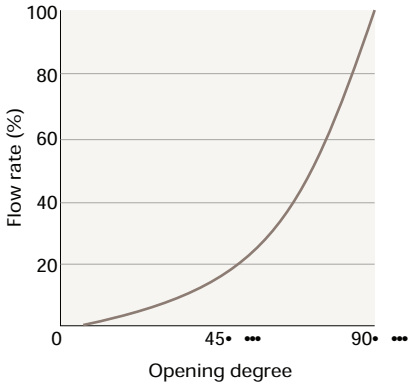

Pressure Loss vs. Flow Rate

Full port valves

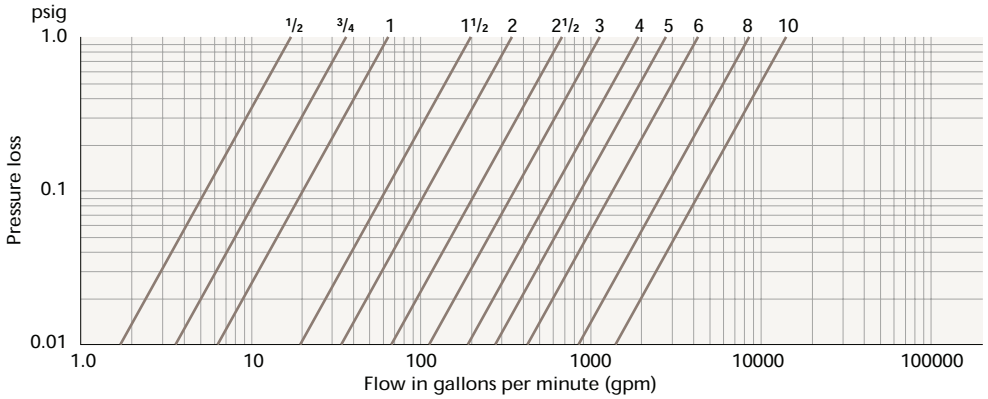

Reduced port valves

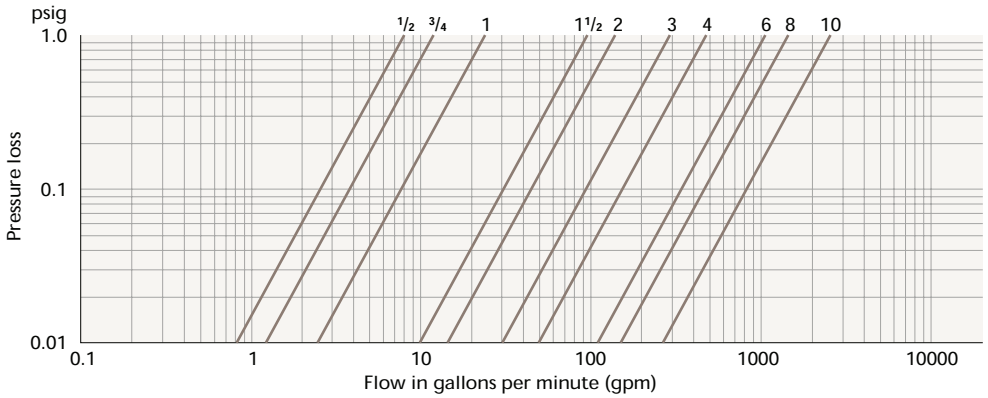

Schedule 40 steel pipe (10m)

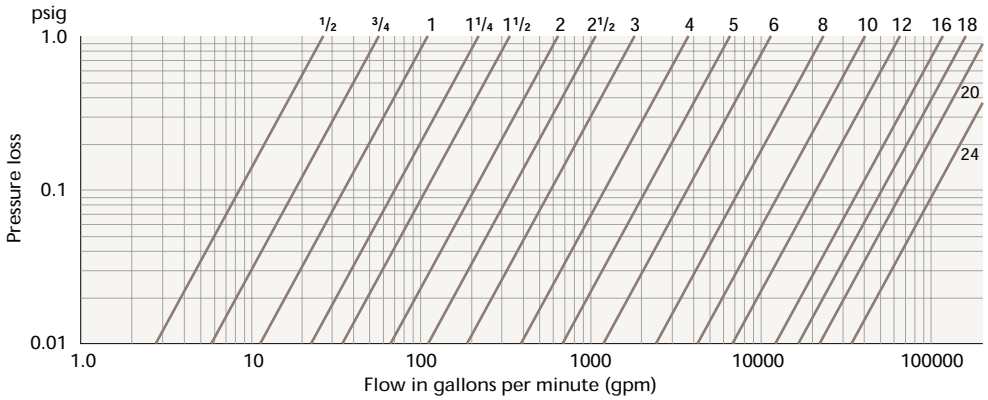

Steel Pipe Flanges

ASME B16.5-1996
Class 150 RF, Class 300 RF

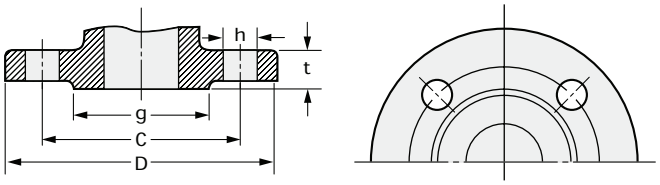

Class 150 steel pipe flange dimensions

Nominal Size inches	D	C	g	t	h (Bolt hole)	Bolt	
	in.	in.	in.	in.	in.	Number	Diam.
1/2	3.50	2.38	1.38	0.44	0.62	4	1/2
3/4	3.88	2.75	1.69	0.50 (0.44)	0.62	4	1/2
1	4.25	3.12	2.00	0.56 (0.44)	0.62	4	1/2
1 1/4	4.62	3.50	2.50	0.62 (0.50)	0.62	4	1/2
1 1/2	5.00	3.88	2.88	0.69 (0.56)	0.62	4	1/2
2	6.00	4.75	3.62	0.75 (0.62)	0.75	4	5/8
2 1/2	7.00	5.50	4.12	0.88 (0.69)	0.75	4	5/8
3	7.50	6.00	5.00	0.94 (0.75)	0.75	4	5/8
4	9.00	7.50	6.19	0.94	0.75	8	5/8
5	10.00	8.50	7.31	0.94	0.88	8	3/4
6	11.00	9.50	8.50	1.00	0.88	8	3/4
8	13.50	11.75	10.62	1.12	0.88	8	3/4
10	16.00	14.25	12.75	1.19	1.00	12	7/8
12	19.00	17.00	15.00	1.25	1.00	12	7/8
14	21.00	18.75	16.25	1.38	1.12	12	1
16	23.50	21.25	18.50	1.44	1.12	16	1
18	25.00	22.75	21.00	1.56	1.25	16	1 1/8
20	27.50	25.00	23.00	1.69	1.25	20	1 1/8
24	32.00	29.50	27.25	1.88	1.38	20	1 1/4

Height of raised face is 0.06 inch each. Dimensions in ( ) are for valve flanges.

Class 300 steel pipe flange dimensions

Nominal Size inches	D	C	g	t	h (Bolt hole)	Bolt	
	in.	in.	in.	in.	in.	Number	Diam.
1/2	3.75	2.62	1.38	0.56	0.62	4	1/2
3/4	4.62	3.25	1.69	0.62	0.75	4	5/8
1	4.88	3.50	2.00	0.69	0.75	4	5/8
1 1/4	5.25	3.88	2.50	0.75	0.75	4	5/8
1 1/2	6.12	4.50	2.88	0.81	0.88	4	3/4
2	6.50	5.00	3.62	0.88	0.75	8	5/8
2 1/2	7.50	5.88	4.12	1.00	0.88	8	3/4
3	8.25	6.62	5.00	1.12	0.88	8	3/4
4	10.00	7.88	6.19	1.25	0.88	8	3/4
5	11.00	9.25	7.31	1.38	0.88	8	3/4
6	12.50	10.62	8.50	1.44	0.88	12	3/4
8	15.00	13.00	10.62	1.62	1.00	12	7/8
10	17.50	15.25	12.75	1.88	1.12	16	1
12	20.50	17.75	15.00	2.00	1.25	16	1 1/8
14	23.00	20.25	16.25	2.12	1.25	20	1 1/8
16	25.50	22.50	18.50	2.25	1.38	20	1 1/4
18	28.00	24.75	21.00	2.38	1.38	24	1 1/4
20	30.50	27.00	23.00	2.50	1.38	24	1 1/4
24	36.00	32.00	27.25	2.75	1.62	24	1 1/2

Height of raised face is 0.06 inch each.

Class 600 RF

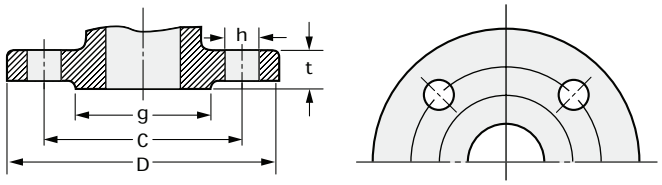

Class 600 steel pipe flange dimensions

Nominal Size inches	D	C	g	t	h (Bolt hole)	Bolt	
	in.	in.	in.	in.	in.	Number	Diam.
1/2	3.75	2.62	1.38	0.56	0.62	4	1/2
3/4	4.62	3.25	1.69	0.62	0.75	4	1/2
1	4.88	3.50	2.00	0.69	0.75	4	1/2
1 1/4	5.25	3.88	2.50	0.81	0.75	4	1/2
1 1/2	6.12	4.50	2.88	0.88	0.88	4	1/2
2	6.50	5.00	3.62	1.00	0.75	8	5/8
2 1/2	7.50	5.88	4.12	1.12	0.88	8	5/8
3	8.25	6.62	5.00	1.25	0.88	8	5/8
4	10.75	8.50	6.19	1.50	1.00	8	5/8
5	13.00	10.50	7.31	1.75	1.12	8	3/4
6	14.00	11.50	8.50	1.88	1.12	12	3/4
8	16.50	13.75	10.62	2.19	1.25	12	3/4
10	20.00	17.00	12.75	2.50	1.38	16	7/8
12	22.00	19.25	15.00	2.62	1.38	20	7/8
14	23.75	20.75	16.25	2.75	1.50	20	1
16	27.00	23.75	18.50	3.00	1.62	20	1
18	29.25	25.75	21.00	3.25	1.75	20	1 1/8
20	32.00	28.50	23.00	3.50	1.75	24	1 1/8
24	37.00	33.00	27.25	4.00	2.00	24	1 1/4

Height of raised face is 0.25 inch each.

Class 1500 RF

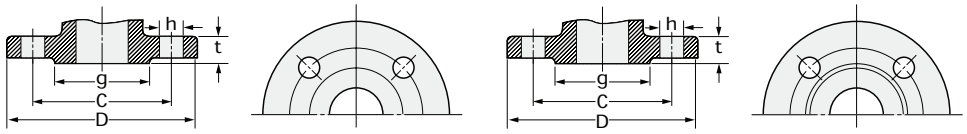

Class 600 to 1500 Class 150, 300

Class 1500 steel pipe flange dimensions

Nominal Size inches	D	C	g	t	h (Bolt hole)	Bolt	
	in.	in.	in.	in.	in.	Number	Diam.
1/2	4.75	3.25	1.38	0.88	0.88	4	3/4
3/4	5.12	3.50	1.69	1.00	0.88	4	3/4
1	5.88	4.00	2.00	1.12	1.00	4	7/8
1 1/4	6.25	4.38	2.50	1.12	1.00	4	7/8
1 1/2	7.00	4.88	2.88	1.25	1.12	4	1
2	8.50	6.50	3.62	1.50	1.00	8	7/8
2 1/2	9.62	7.50	4.12	1.62	1.12	8	1
3	10.50	8.00	5.00	1.88	1.25	8	1 1/8
4	12.25	9.50	6.19	2.12	1.38	8	1 1/4
5	14.75	11.50	7.31	2.88	1.62	8	1 1/2
6	15.50	12.50	8.50	3.25	1.50	12	1 3/8
8	19.00	15.50	10.62	3.62	1.75	12	1 5/8
10	23.00	19.00	12.75	4.25	2.00	12	1 7/8
12	26.50	22.50	15.00	4.88	2.12	16	2
14	29.50	25.00	16.25	5.25	2.38	16	2 1/4
16	32.50	27.75	18.50	5.75	2.62	16	2 1/2
18	36.00	30.50	21.00	6.38	2.88	16	2 3/4
20	38.75	32.75	23.00	7.00	3.12	16	3
24	46.00	39.00	27.25	8.00	3.62	16	3 1/2

Height of raised face is 0.25 inch each.

ASME 1316.47-1996 (Series A)

Class 150 steel pipe flange dimensions

Nominal Size inches	D	C	g	t	h (Bolt hole)	Bolt	
	in.	in.	in.	in.	in.	Number	Diam.
26	34.25	31.75	29.50	2.69	1.38	24	1 1/4
28	36.50	34.00	31.50	2.81	1.38	28	1 1/4
30	38.75	36.00	33.75	2.94	1.38	28	1 1/4
32	41.75	38.50	36.00	3.18	1.62	28	1 1/2
34	43.75	40.50	38.00	3.25	1.62	32	1 1/2
36	46.00	42.75	40.25	3.56	1.62	32	1 1/2

Height of raised face is 0.06 inch each.

Class 300 steel pipe flange dimensions

Nominal Size inches	D	C	g	t	h (Bolt hole)	Bolt	
	in.	in.	in.	in.	in.	Number	Diam.
26	38.25	34.50	29.50	3.12	1.75	28	1 5/8
28	40.75	37.00	31.50	3.38	1.75	28	1 5/8
30	43.00	39.25	33.75	3.62	1.88	28	1 3/4
32	45.25	41.50	36.00	3.88	2.00	28	1 7/8
34	47.50	43.50	38.00	4.00	2.00	28	1 7/8
36	50.00	46.00	40.25	4.12	2.12	32	2

Height of raised face is 0.06 inch each.

Class 600 steel pipe flange dimensions

Nominal Size inches	D	C	g	t	h (Bolt hole)	Bolt	
	in.	in.	in.	in.	in.	Number	Diam.
26	40.00	36.00	29.50	4.25	2.00	28	1 7/8
28	42.25	38.00	31.50	4.38	2.12	28	2
30	44.50	40.25	33.75	4.50	2.12	28	2

Height of raised face is 0.25 inch each.

CAUTION

Pressure-temperature ratings and other performance data published in this catalog have been developed from our design calculation, in-house testing, field reports provided by our customers and/or published official standards or specifications. They are good only to cover typical applications as a general guidance to users of KITZ products introduced in this catalog.

For any specific application, users are kindly requested to contact KITZ Corporation for technical advice, or to carry out their own study and evaluation for proving suitability of these products to such an application. Failure to follow this request could result in property damage and/or personal injury, for which we shall not be liable.

While this catalog has been compiled with the utmost care, we assume no responsibility for errors, impropriety or inadequacy. Any information provided in this catalog in subject to from-time-to-time change without notice for error rectification, product discontinuation, design modification, new product introduction or any other cause that KITZ Corporation considers necessary. This edition cancels all previous issues.

NOTICE

If any products designated as strategic material in the Foreign Exchange and Foreign Trade Law, Cabinet Order Concerning Control of Export Trade, Cabinet Order Concerning Control of Foreign Exchange and other related laws and ordinances ("Foreign Exchange Laws") are exported to any foreign country or countries, an export license issued by the Japanese Government will be required under the Foreign Exchange Laws.

Further, there may be cases where an export license issued by the government of the United States or other country will be required under the applicable export-related laws and ordinances in such relevant countries.

The contract shall become effective subject to that a relevant export license is obtained from the Japanese Government.

Memo

ISO 9001 certified since 1989

KITZ

KITZ CORPORATION OF AMERICA

Distributed by

Printed in japan

0602①PP

www.mastewart.com

M. A. Stewart & Sons Ltd.
VALVES AND FITTINGS

Head Office
12900–87th Avenue
Surrey, British Columbia
Canada V3W 3H9
mail to: P.O. 258, Surrey, BC, V3T 4W8
Phone: (604) 594-8431
Toll Free North America: 1-800-594-8431
Fax: (604) 594-4335

Ontario Branch
252 Hunt Street
Ajax, Ontario L1S 1P7
Phone: (905) 683-7303
Fax: (905) 683-9108

Alberta Branch
6125 - 56th Avenue
Edmonton, Alberta T6B 3E2
Phone: (780) 436-9051
Fax: (780) 435-0463
Toll Free in Alberta 1-800-232-7376

Quebec Branch
79H Brunswick Blvd.
Dollard-des-Ormeaux, Que. H9B 2J5
Phone: (514) 421-6311
Fax: (514) 421-6323

Sales Offices
Calgary, Alberta
Phone: (403) 252-7262
Fax: (403) 253-8455

Winnipeg , Manitoba
Phone: (204) 837-5604
Fax: (204) 896-1992

Dartmouth, Nova Scotia
Phone: (905) 683-7303
Fax: (905) 683-9108

B.K. THORPE COMPANY
A MEMBER OF THE M.A. STEWART GROUP

Long Beach Branch
1811 E. 28th Street
Signal Hill, CA 90755
Phone: (562) 595-1811
Toll Free: 1-888-337-7598
Fax: (562) 426-6016

Bakersfield Branch
5225 Gilmore Ave.
Bakersfield, CA 93308-6302
Phone: (661) 322-1935
Toll Free: 1-877-258-6166
Fax: (661) 322-6719

M. A. Stewart & Sons (USA) Ltd.
VALVES AND FITTINGS

Charlotte Branch
803 Pressley Road, Suite 107
Charlotte, North Carolina, 28217
Phone: (704) 527-0722
Toll Free: 1-866-582-5837
Fax: (704) 527-0791
Toll Free: 1-866-810-9287