PTFE Butterfly Valve



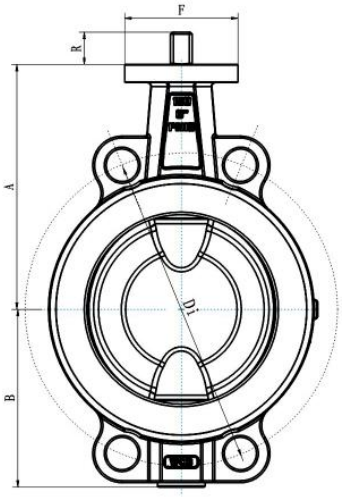

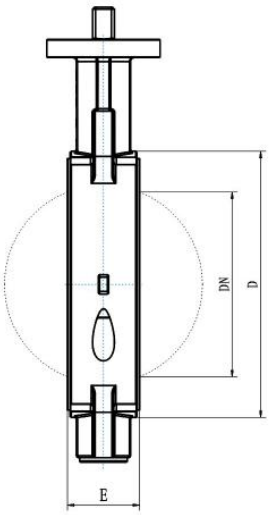



Wafer Type

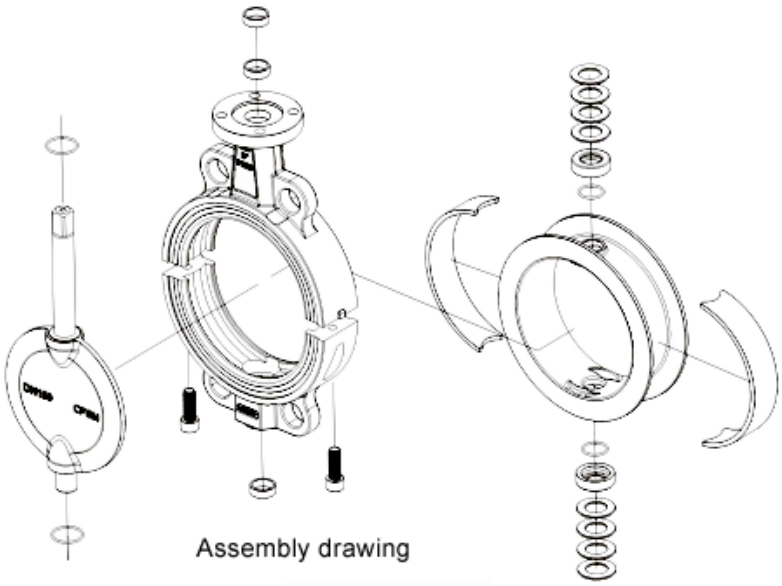

Assembly drawing

MATERIAL SPECIFICATION

Technical Specification	Part Name	Material
Design：DINPN10/16 ANSI150	Body	WCB/GGG40
Working Temperature：-40℃~180℃	Disc	PTFE/CF8
Top Flange：ISO5211	Seat	PTFE
Seat Test Pressure：1.1*PN	Stem	SS304/316
Shell Test Pressure：1.5*PN	O-Rings	PTFE/VMQ

PTFE Butterfly Valve

It can choose right one according the different conditions: manual operation，Worm Gear operation, Pneumatic operation , Electric operation

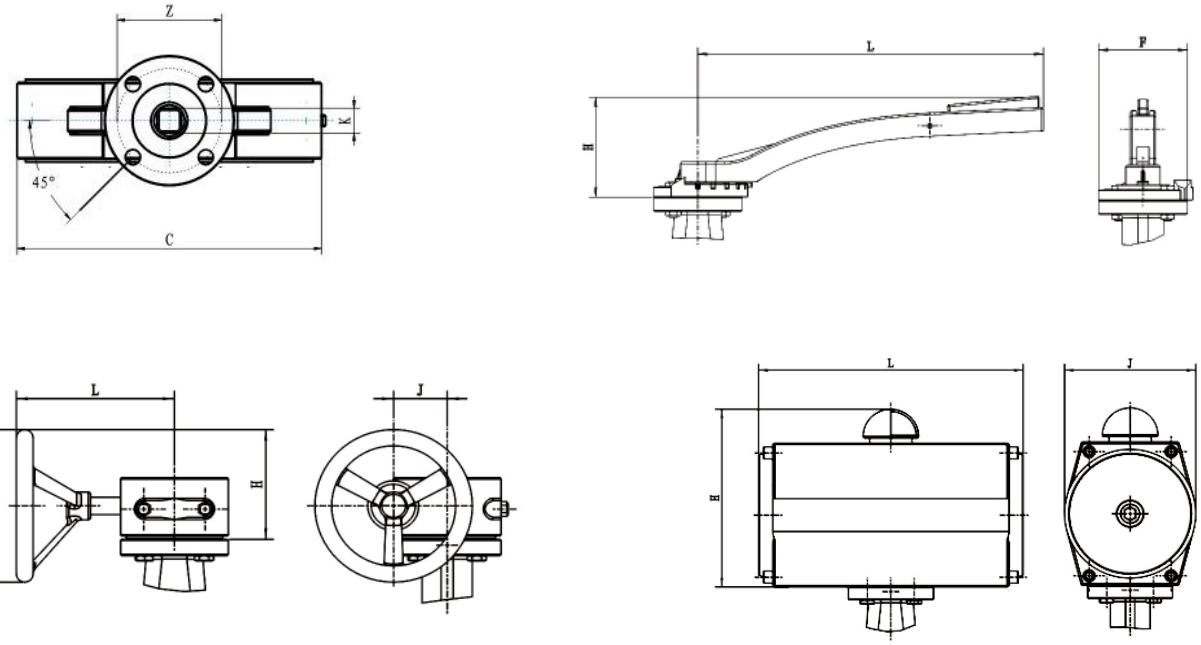

DIMENTIONS (mm)

DN	A	B	C	D	E	F	K	W.T（kg）
40	100	50	83	84	33	72	11	2.3
50	110	63	100	100	43	72	11	3.35
65	125	72	120	118	46	72	11	4.5
80	151	80	130	130	46	72	11	5.5
100	151	111	160	157	52	90	14	8
125	170	124	177	177	46	90	17	10.6
150	190	138	207	206	56	90	17	12.8
200	222	171	258	258	60	120	22	20
250	270	209	315	315	68	120	22	31.8
300	290	230	366	366	78	135	27	45
350	325	261	416	415	78	135	27	37.5
400	342	285	470	470	102	180	36	63.5