AD500

Automatic Door Operator
Instruction Manual

For easy to follow installation instructions, please visit link below for installation video or scan QR code on the right

http://www.gianni.com.tw/AutomaticDoorOperator_AD500.html

Table of Contents

1. General Safety Precautions ---------- 01

2. Declaration by Manufacturer ---------- 01

3. Product Features ---------- 02

4. Parts Identification ---------- 03

5. Specifications ----------04

6. Before Installation ---------- 07

7. Template Instructions ----------12

8. Installation Preparation by Frame Types ---------- 16

9. Base Plate & Reducer Installation ----------18

10. Push Arm Assembly Installation (For Outswing Doors) --------21

11. Sliding Arm Assembly Installation (For Inswing Doors) --------24

12. Learning Mode ----------26

13. Operation Controller ----------26

14. Optional Accessories ----------27

15. Trouble Shooting & Maintenance----------28

16. Notes for Engineers ----------29

17. Safety Instructions for Users ----------31

1. General Safety Precautions

- This instruction manual is intended solely for qualified professionals. All installations, electrical connections and adjustments must follow the installation instructions.
- Please read these instructions carefully and watch video instructions before installing this unit. Incorrect installation may result in severe personal injury and/or damage to property.
- Packaging materials (plastic and polystyrene, etc) should be discarded or recycled in accordance with waste disposal regulations and should be kept out of reach of children.
- Do not install this unit in any environment with potentials and risks of chemical explosions.
- Make sure the existing structure is up to standard. GEM is not responsible for any damage resulting from incorrect use of this unit.
- The safety devices (e.g. photocell and emergency stop) must follow the technical safety regulations and current safety standards, including the limit of forces and speeds.The safety devices must protect any areas where the risk exists of being crushed, cut or gragged, or where there are any other risks generated by the motorized door/gate. Apply hazard area notices required by applicable regulations.
- Each installation must clearly show the identification details of the motorized door/gate.
- Make sure the voltage specified is correct for the device.
- Allow at least 10 seconds of rest time between every new cycle to ensure adequate residual current will return to the power system.
- When necessary, connect the motorized door/gate to a reliable earth system with applicable safety regulations. Before carrying out installation, maintenance and repair, turn off the power supply before opening the lid to access the electrical parts. To handle electronic parts, wear earthed antistatic conductive gloves.

2. Declaration by Manufacturer

Gianni Industries, Inc.
Address: No. 13, Zhongxing Road, Tucheng District, New Taipei City 236, Taiwan (R.O.C.)
E-mail: inquiry1@gianni.com.tw
Website: www.gianni.com.tw
Herewith declares the following on AD500 Automatic Door Operator for swing doors:

- AD500 is one way direction only and used on single doors
- AD500 Automatic Door Operator cannot be installed with other mechanical devices (e.g. door closers) except electric door locks.
- UL listed and in conformity with other CE directives: Electromagnetic Compatibility Directive (EN61000) and Low Voltage Directive (EN 60950-1)
- Warranty: 3 years (Factory test: 1 million cycles)
- Product should be operated within the recommended door weight range. A reduction in performance is expected when operating outside of the recommended range.
- The performance of the door operator may be affected by different independent variables such as friction, preload (wind pressure), and other ambient factors. These factors may change the performance of the door operator and its working life and parts. Furthermore, the surroundings must be considered to ensure the operator’s durability and smooth operation.

Make sure to identify whether the door swing direction is inswing or outswing before installing the door operator. Use the push arm attachment for outswing doors and the sliding arm and track assembly for inswing doors.

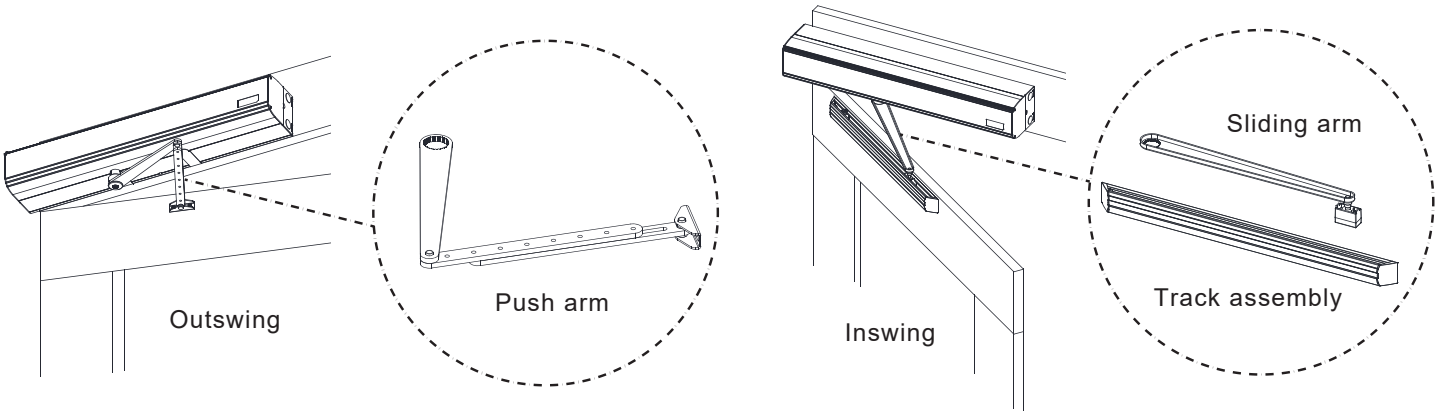

3. Product Features

- Operating voltage: 100~240 VAC
- Door weight range: 50~150 kg
- Four modes of operation: Auto Mode/ Hold Mode/ Manual Mode/ Push Mode
- Obstruction detection - If the door is obstructed during operation, the operator will stop the door and reverse movement
- Backup battery input for emergency power supply
- Operates with infrared safety sensors, wall push buttons, card readers, or radio frequency devices
- Adjustment of hold-up time, opening/closing speed, and opening angle
- Easy integration with electric locking devices and access control systems
- The AD500 automatic door operator uses a DC motor to open the door. It closes the door by motor and spring force.
- When an opening signal is received by the control unit, the door is opened at the operator-adjusted opening speed until it reaches the back check position, where it decelerates to a slower speed.

Opening Cycle

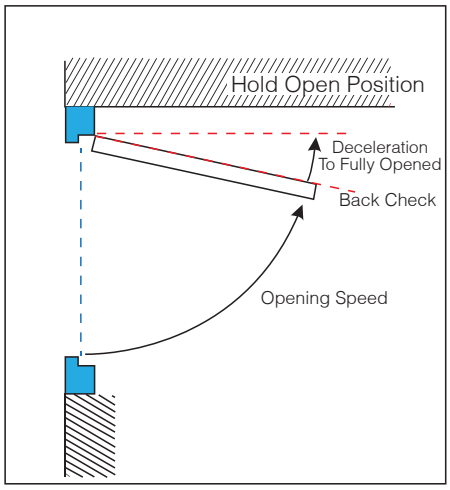

Closing Cycle

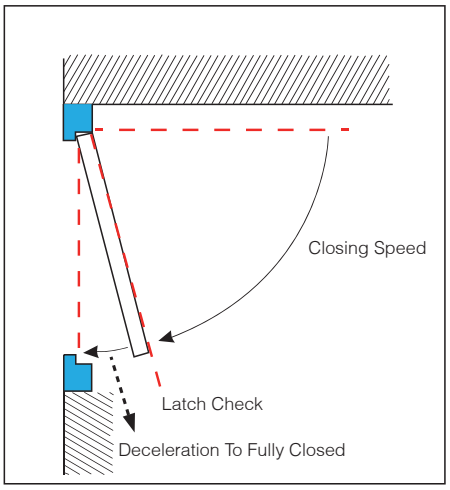

4. Parts Identification

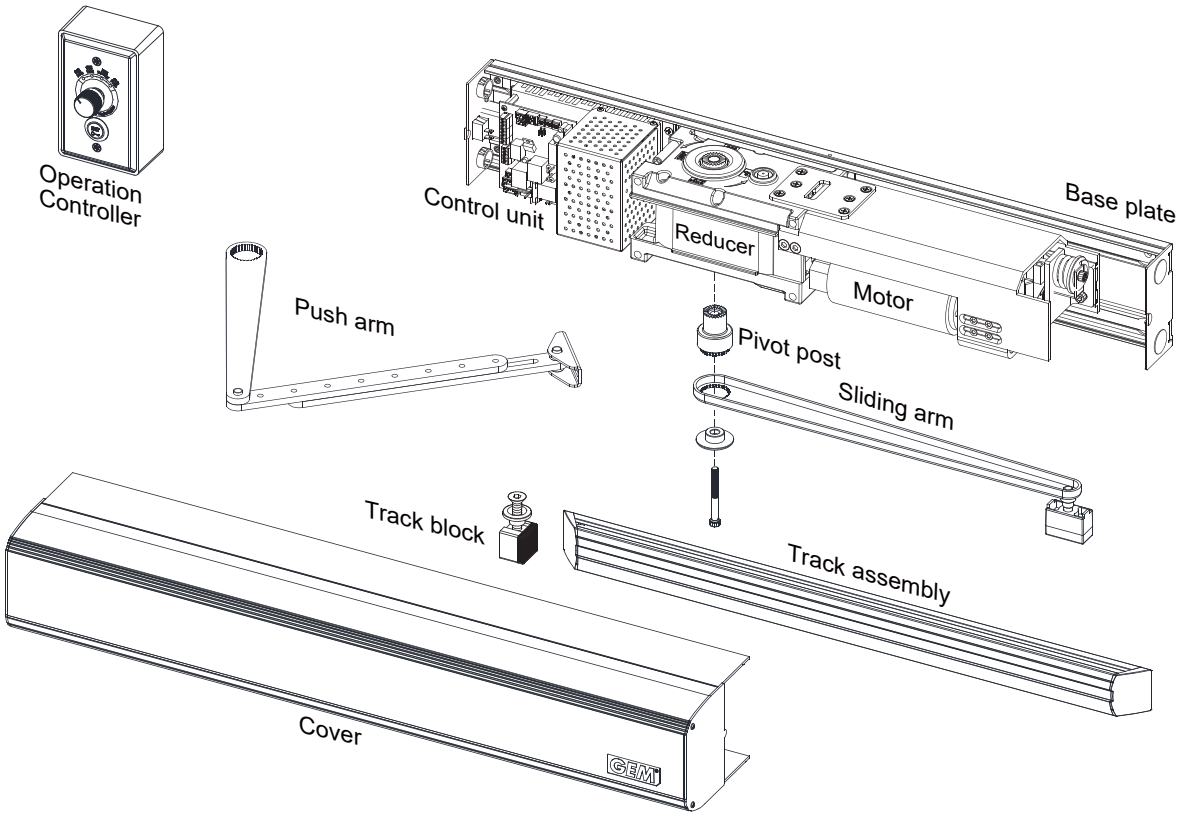

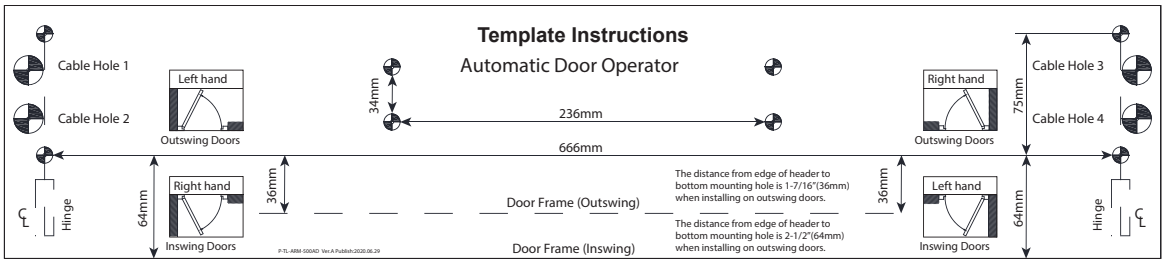

Template (Operator body)

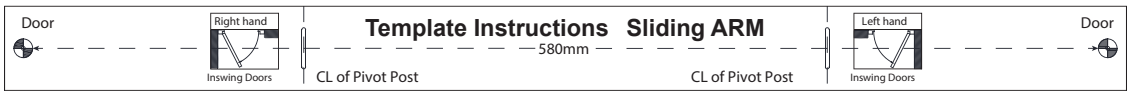

Template (Sliding arm)

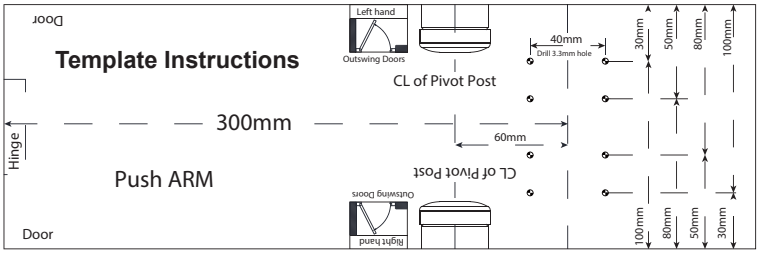

Template (Push arm)

5. Specifications

Operating Voltage	100-240 VAC +10/-15%, 50/60 Hz
Current Draw	3.2A max 77 W, 0.21 - 0.45 A average
Motor Specs	Voltage: 60 VDC Maximum current: 2 A Power consumption: 98 W Maximum rotation frequency: 2900 RPM
Maximum Torque Output	40 NM
Opening Time (0° - 90°)	Variable between 5 - 8 seconds
Closing Time (90° - 10°)	Variable between 12 - 25 seconds
Hold Open Time	Selectable 3, 10, 20, 30 seconds
Battery Requirement	24 VDC, 8A
Door Width	29 1/2”-47 1/4” (750-1200 mm)
Door Height	110 1/4” (2800 mm)
Door Weight	50 - 150 kg (110-331 lbs)
Electric Locks Power Input	24VDC, max. 250mA
Operating Temperature	-4 °F to +113 °F (-20 °C to +45 °C)
Relative Humidity (non-condensing)	Max 85%
Maximum Degree of Opening	80° - 120°
Net Weight	13.3 kg (30 lbs)
Operator Body Dimensions	28 3/16” (L) X 5 3/16” (W) X 4 5/16”(D) 716(L) X 131(W) X 110(D) mm
Sliding Arm Length	15 3/4” (400 mm)
Track Assembly Length	24 7/16” (620 mm)

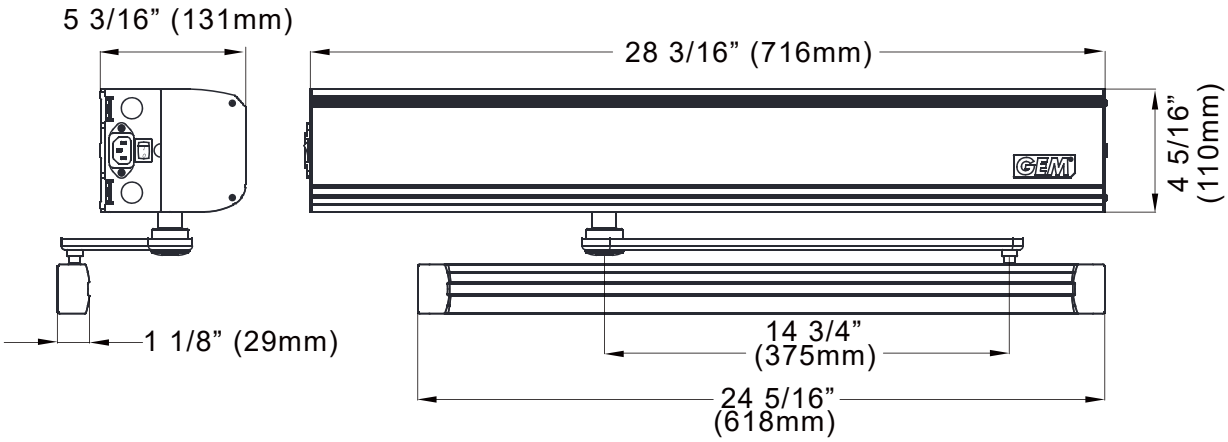

Control Unit

AD500-DB interlock module

Master door opens first and closes last. Slave door opens second and closes first.

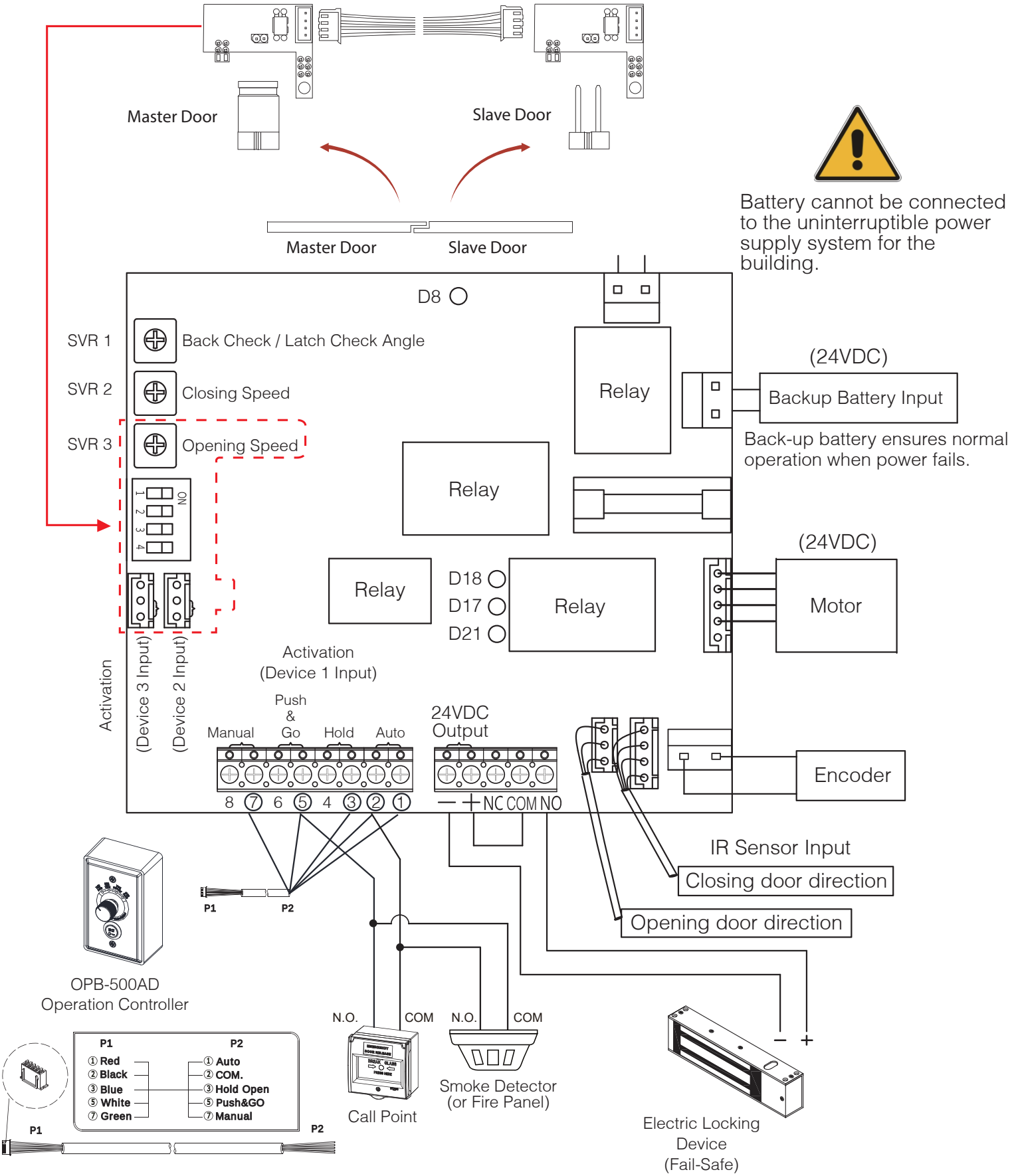

Make sure the voltage specified is correct for the device.

For safety, we recommend using a fail-safe electric lock in case of emergencies or power interruptions.

Functions on the Control Unit

Function	Description	Diagram
Activation Input 2	Operator is activated by Activation Device 2. (Use the included 2-pin red, or black wire harness)	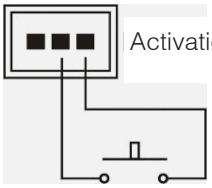
Activation Input 3	Operator is activated by Activation Device 3. (Use the included 2-pin red, or black wire harness)	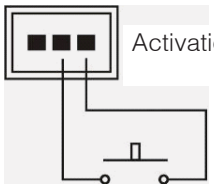
Infrared Sensor Input (Closing door direction)	Monitoring of IR impulse or detection (Use the included 4-pin, 3-wire red/white/black harness)	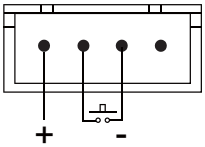
Infrared Sensor Input (Opening door direction)	Monitoring of IR impulse or detection (Use the included 3-pin, 3-wire red/white/black harness)	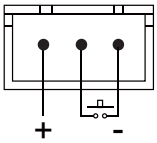
Adjusting hold open time		
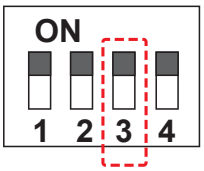	Position 3 ON Hold open for 3 seconds	
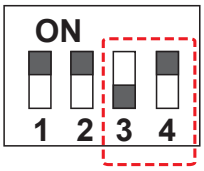	Position 3 OFF Position 4 ON Hold open for 10 seconds	
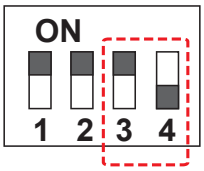	Position 3 ON Position 4 OFF Hold open for 20 seconds	
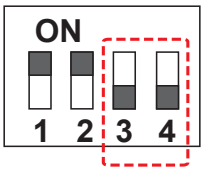	Position 3 OFF Position 4 OFF Hold open for 30 seconds	

LED Indicator

D8 (Green light): Power indicator

D17/18 (Red light): Door position indicator light. After supplying power, the red light turns on and then off, indicating door position detecting is completed to proceed the learning mode.

D21 (Yellow light): Lit when door is locked; off when door is unlocked.

6. Before Installation

- For security and vandalism prevention, always mount the operator access in the interior of a building whenever possible.
- This product is used only for single door applications. The AD500-DB automatic operator is used on double doors.
- Examine the indoor and outdoor wind pressure before installing the AD500. To assure the proper operation and the best performance, please make a regular check of your operator.
- Make sure that the door leaf is properly reinforced at the installation points.
- Consider all power wire entry locations and signaling wires before preparing for installation.
- Stand with your back against the hinges. If door opens at your left side, it is left-handed. If door opens at your right side, it is right-handed. Right Hand shown in the diagram.
- Make sure to identify the door swing direction, whether left hand or right hand, and inswing or outswing. The operator must be installed inside of the room.

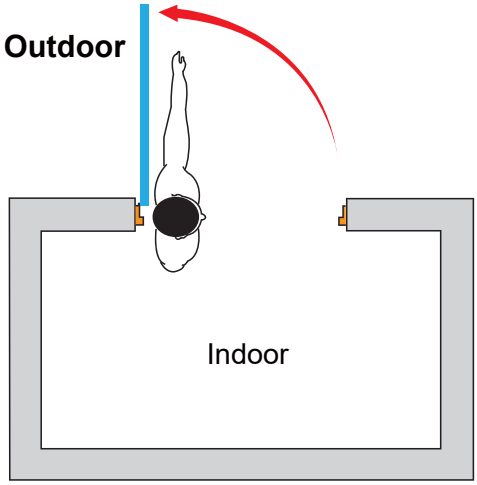

left hand outswing doors

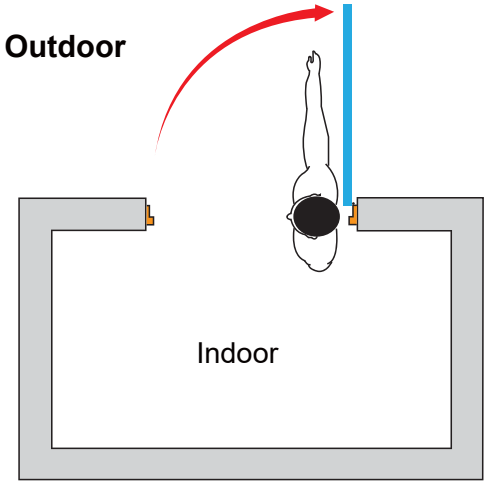

right hand outswing doors

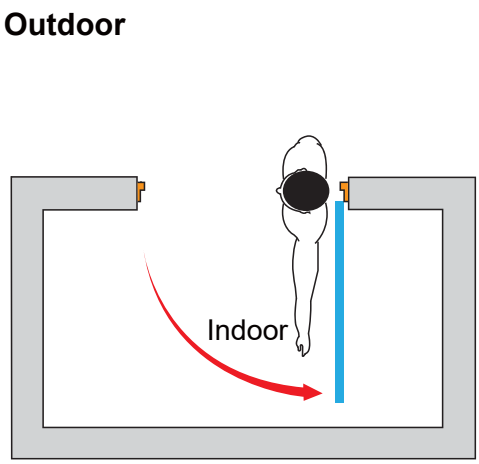

left hand inswing doors

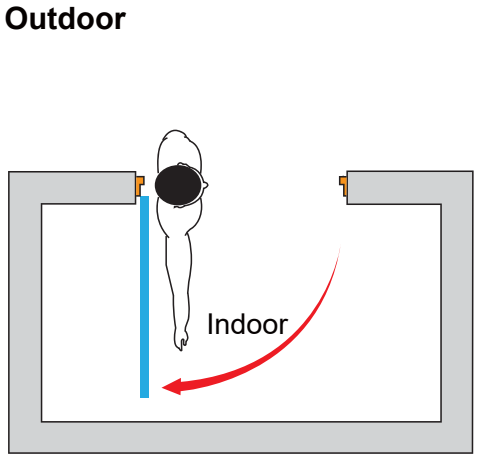

right hand inswing doors

Pre-Setup Evaluation

1.The AD500 is used for single door applications. For double door applications, use the AD500-DB (2 units of AD500 door operators including an interlock module) to program the master and slave door. The master door opens first and then closes last while the slave door opens second and closes first. The double operator cover needs to be ordered specially.

2.When installing on outswing doors, there must be space at least 13 cm above the door header. When installing on inswing doors, there must be space at least 16 cm above the door header.

3.The required door leaf width is at least 75 cm (minimum 80 cm wide door frame) at this time the electromagnetic lock can only be installed upright.

4.It is strongly recommended to install on concrete or brick walls. For wood plates or partition boards, add a piece of reinforced metal plate to hold the operator weight or prevent shaking when opening or closing the door.

5.Note that this product cannot be installed on frameless glass doors or walls, sliding doors, and gates.

6.Install shaft extensions (DT-20/50/70) if the frame stop exceeds standard length (see measurement A and C on page 10). If the frame stop exceeds 40 mm length to contact with pivot post, add spacers to compensate for gaps and no shaft extensions are required.

7.For outswing applications: if the door frame and leaf depth (X) exceed 150 mm (see the illustration on page 9), the lengthen arm must be used. The maximum depth (X) of the lengthen arm does not exceed 300 mm.

8.For inswing applications, the door leaf and frame depth do not exceed 70 mm (see the illustration on page 10).

9.Check if the door moves smoothly and the hinges can carry the door load. If the door hinges are warped, adjust the hinges first and then install the door operator.

10.The existing floor hinges or mechanical door closer needs to be removed.

11.The existing mechanical latch needs to be removed.

12.The existing door handle needs to be removed. (when using this product, it is strictly forbidden to push or pull the door)

13.It is not recommended to install on exterior doors or gates.

14.This product closes the door electrically. When closing the door, there will be a slight collision sound. Attach a door frame silencer if necessary.

15.It is suggested to install electromagnetic lock to prevent the door from being opened by force under wind load conditions or access control.

Push Arm

Use the push arm for outswing doors. Use the lengthen arm If the depth (“X”) exceeds 150 mm. For lengthen arm, the “X” maximum depth cannot exceed 300 mm.

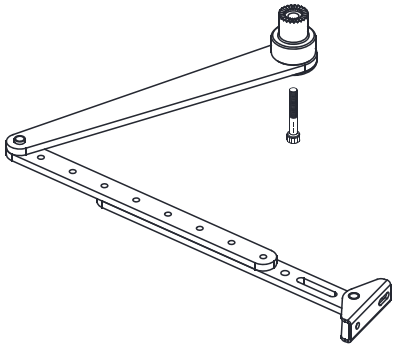

Push Arm Extensions

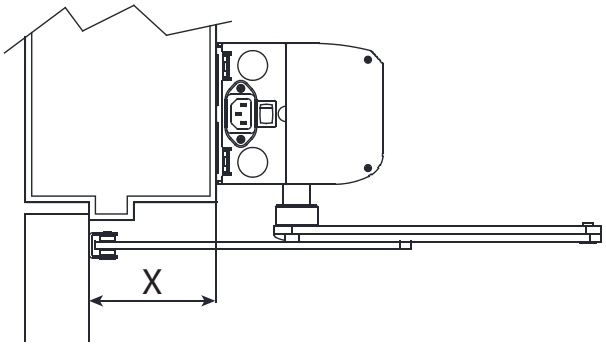

Reveal =X	Extension
Up to 5-15/16” (0-150mm)	Standard arm
5-15/16” to 11-13/16”(150-300mm)	Lengthen arm

Standard Arm Dimensions

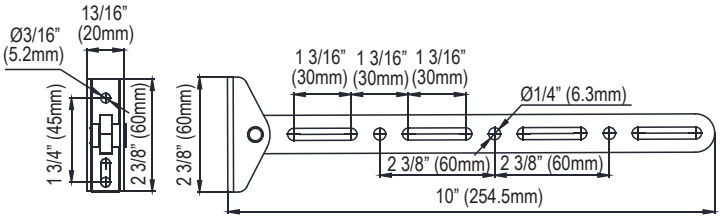

P/N : ARM-500AD-3

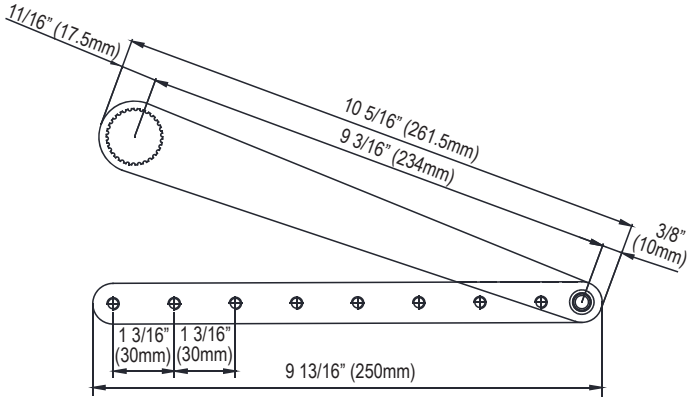

Lengthen Arm Dimensions

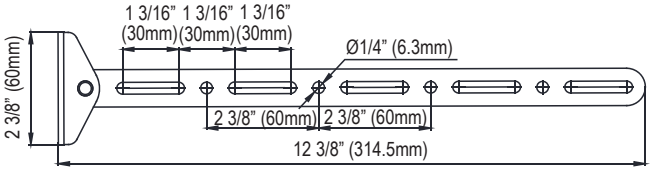

P/N : ARM-500AD-3L

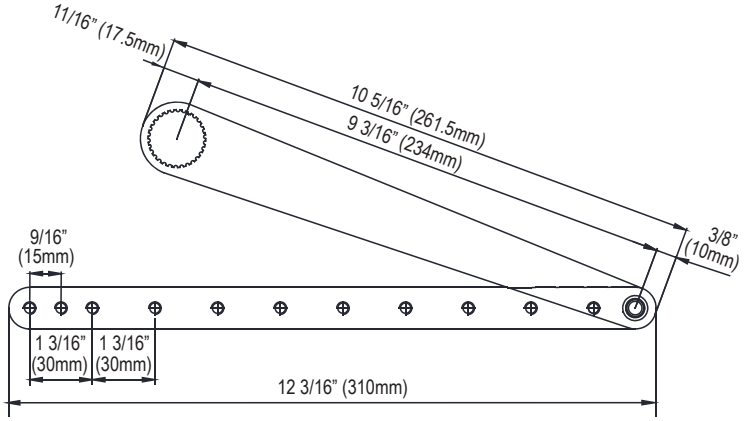

Drive Shaft Extension Kits

Shaft extensions are used for specific door frames.

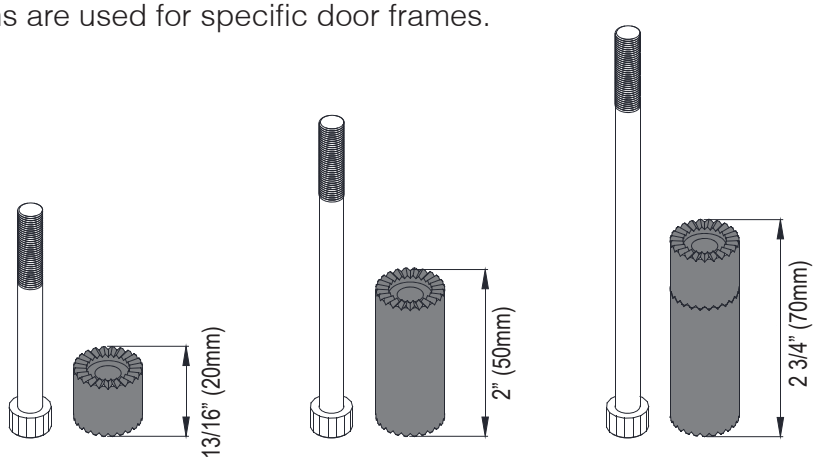

P/N : DT-20 P/N : DT-50 P/N : DT-70 (DT-20+DT-50)

Operator with Push Arm System

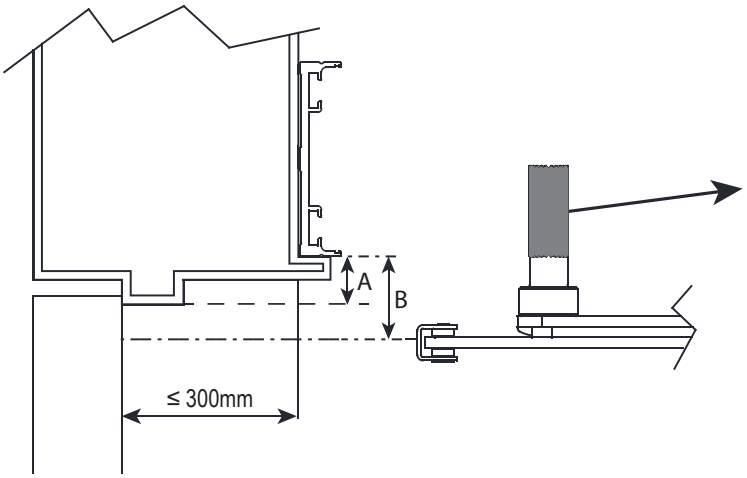

P/N		A	B
—		0 ~ 30mm	50mm
DT-20	20mm	30 ~50mm	70mm
DT-50	50mm	50 ~80mm	100mm
DT-70	70mm	80~ 100mm	120mm

Operator with Sliding Arm System

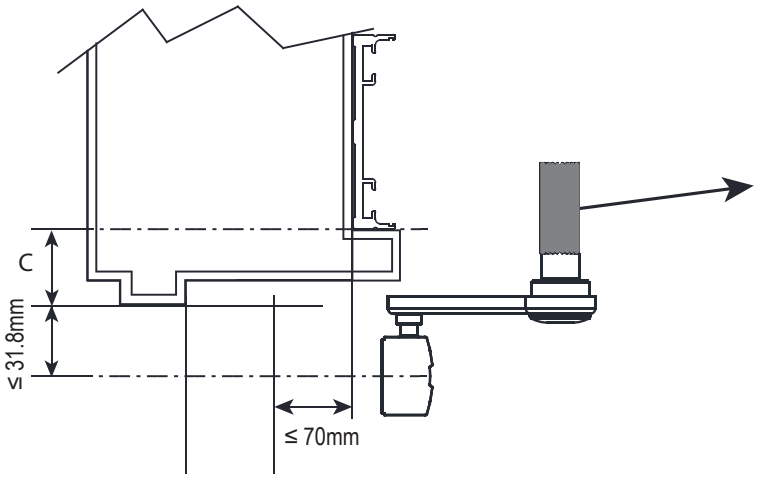

P/N		C
—		0 ~37mm
DT-20	20mm	37 ~57mm
DT-50	50mm	57 ~87mm
DT-70	70mm	87 ~107mm

Required Tools

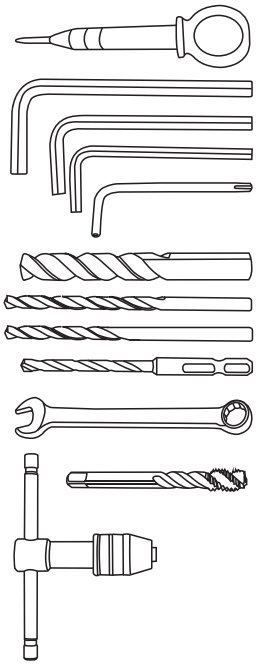

Center Punch

6mm Allen Wrench (included)
5mm Allen Wrench (included)
4mm Allen Wrench (included)
Torx Wrench (5mm)

Drill Bit -(9.5mm)
Drill Bit -(5.1mm)
Drill Bit -(4mm)
Masonry Drill Bit (5mm)

Spanner (12mm)

TAPS (6mm)

T-Handle Tap Wrench

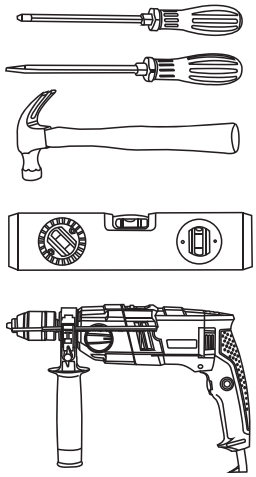

Phillips Screwdriver

Flathead Screwdriver

Hammer

Spirit Level

Electric Drill (Pro)

Removing the Cover & Reducer

Unplug the signaling wires and power wire for the motor.

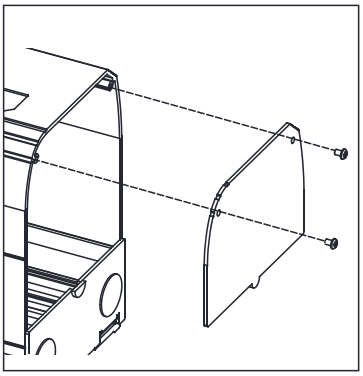

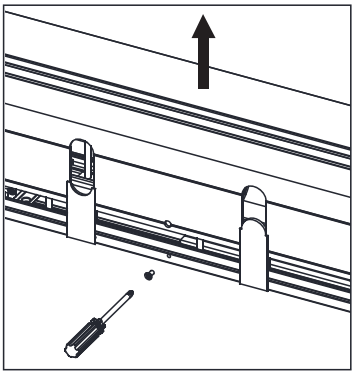

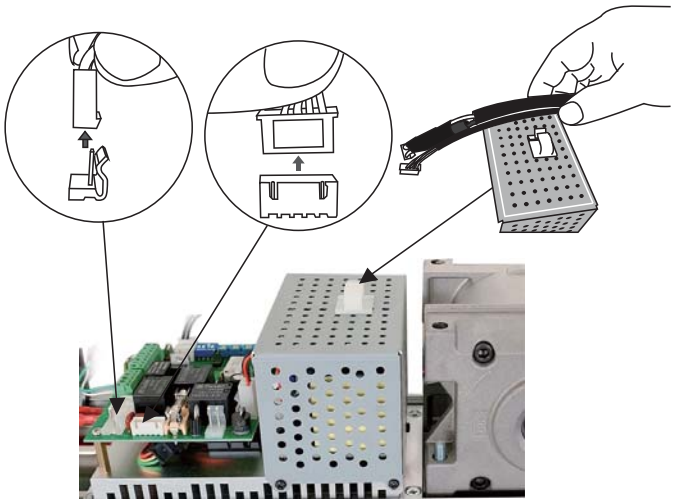

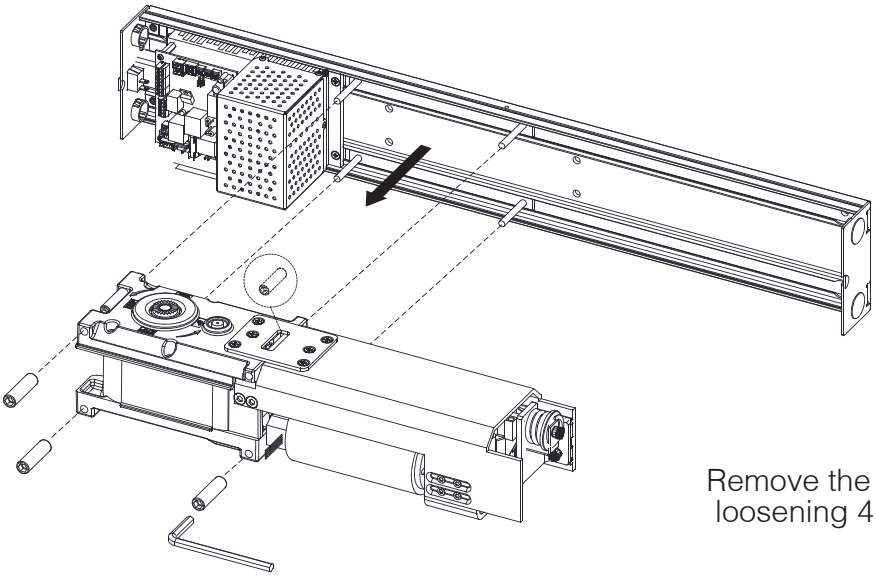

Remove the reducer by loosening 4 screws.

7. Template Instructions

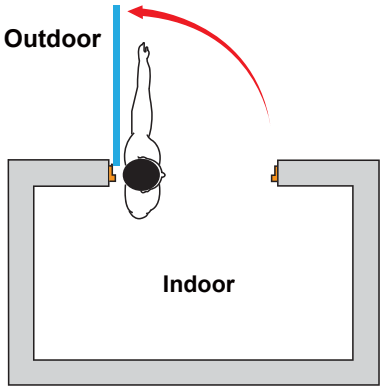

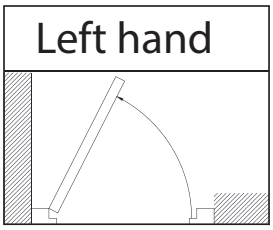

Outswing Doors

7-1

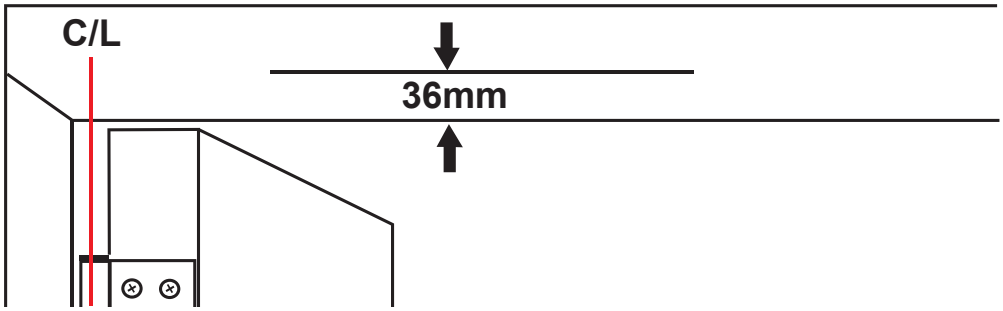

Directions: Check the door hinge centerline, and the two reference lines that are 36 mm away from the bottom line of the header frame.

Note the centerline of hinge on the template.

7-2

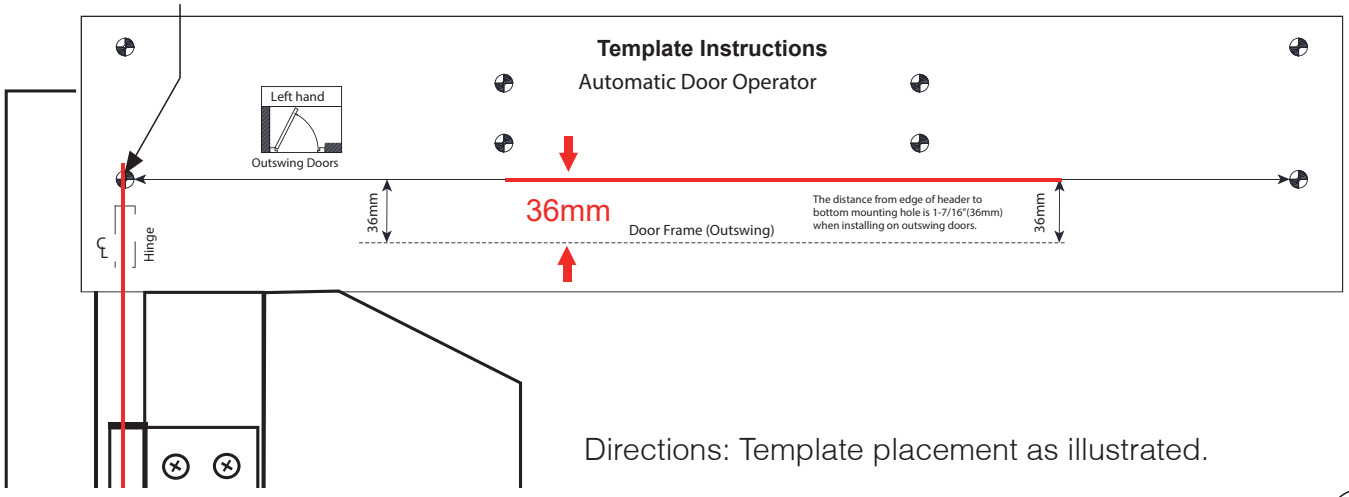

Directions: Template placement as illustrated.

7-3

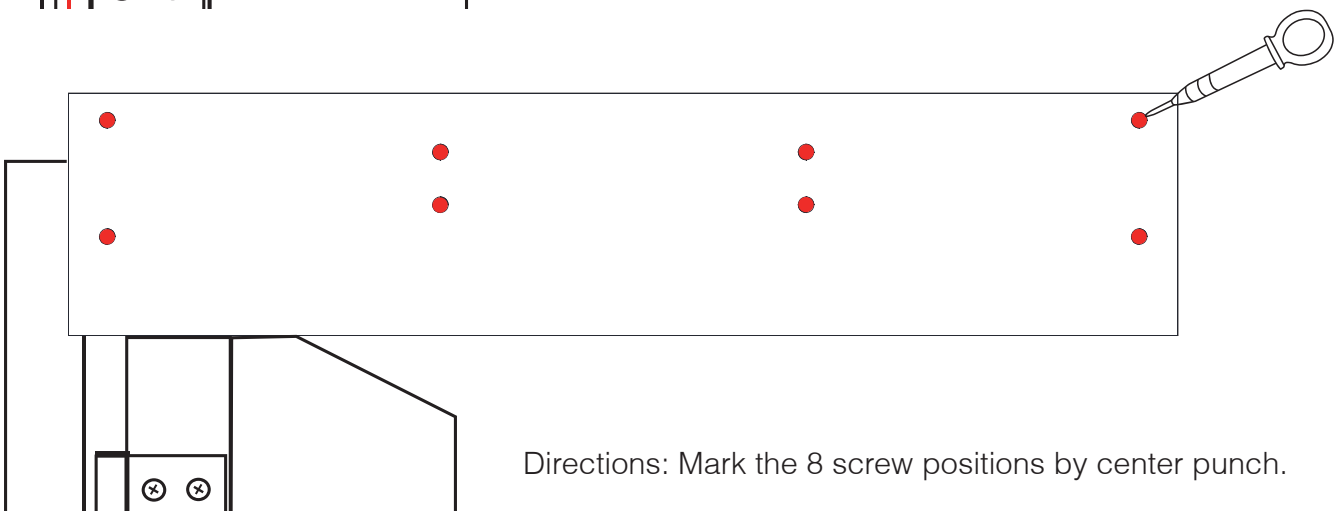

Directions: Mark the 8 screw positions by center punch.

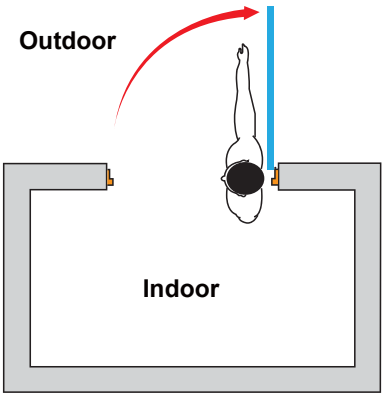

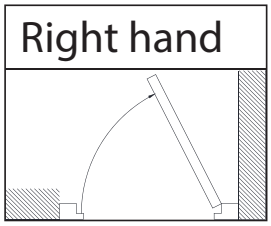

Outswing Doors

7-4

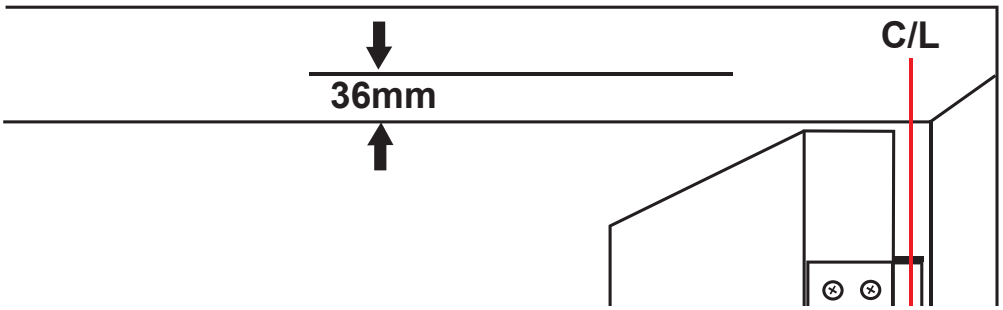

Directions: Check the door hinge centerline, and the two reference lines that are 36 mm away from the bottom line of the header frame.

Note the centerline of hinge on the template.

7-5

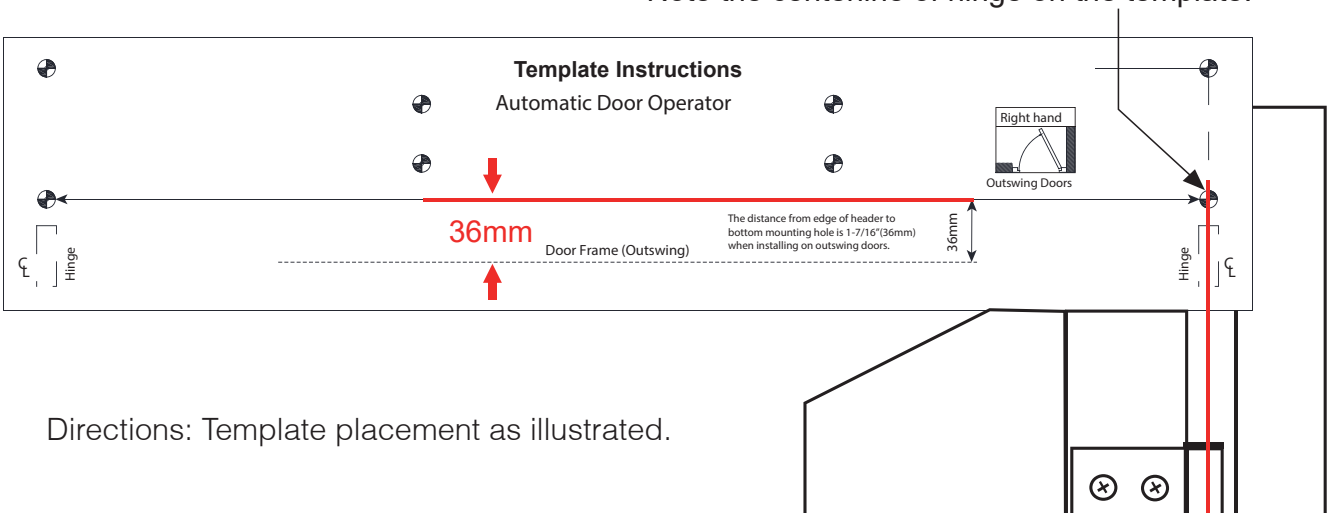

Directions: Template placement as illustrated.

7-6

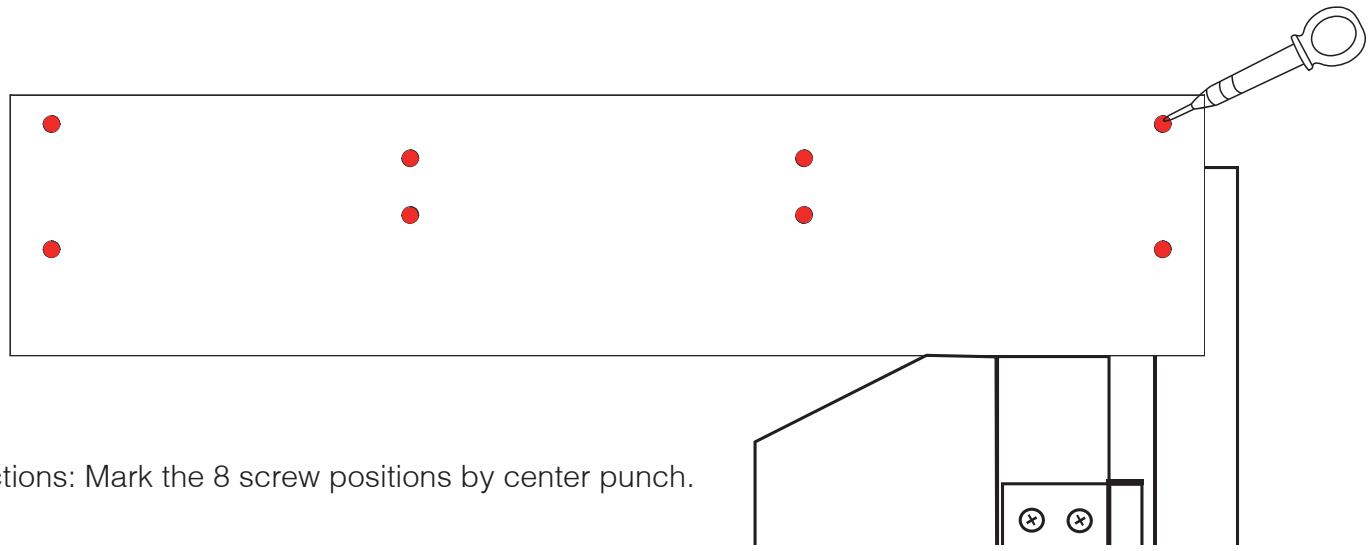

Directions: Mark the 8 screw positions by center punch.

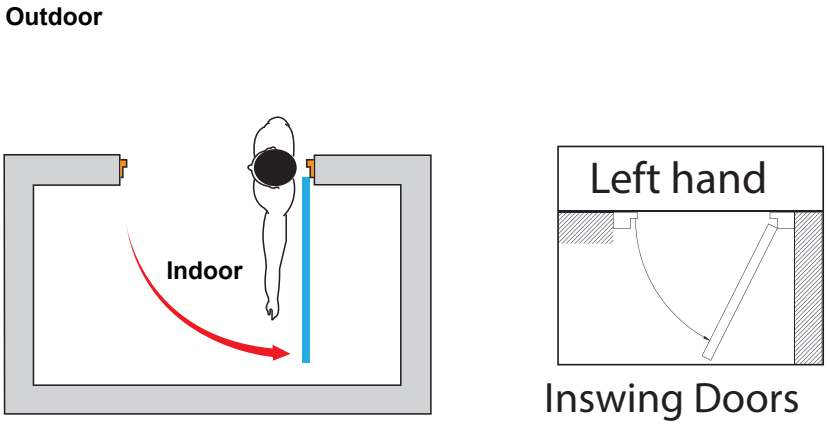

7-7

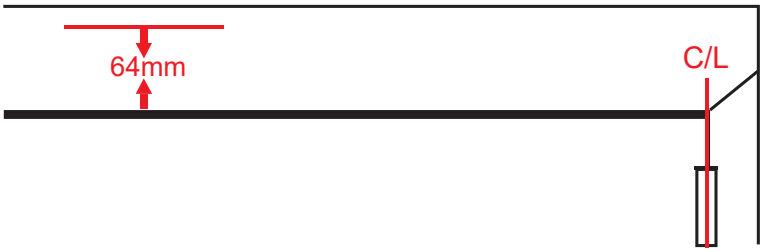

Directions: Check the door hinge centerline, and the two reference lines that are 64 mm away from the bottom line of the header frame.

Note the centerline of hinge on the template.

7-8

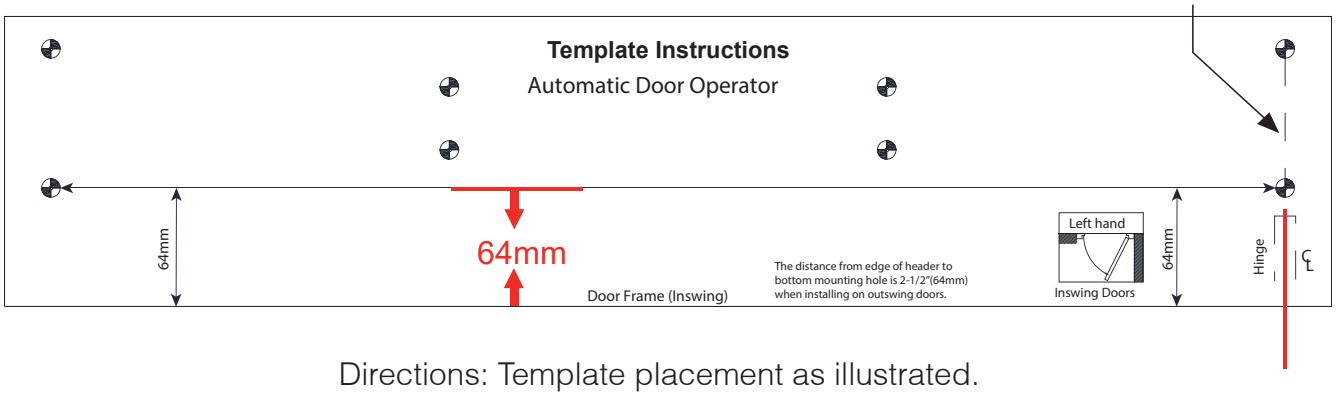

Directions: Template placement as illustrated.

7-9

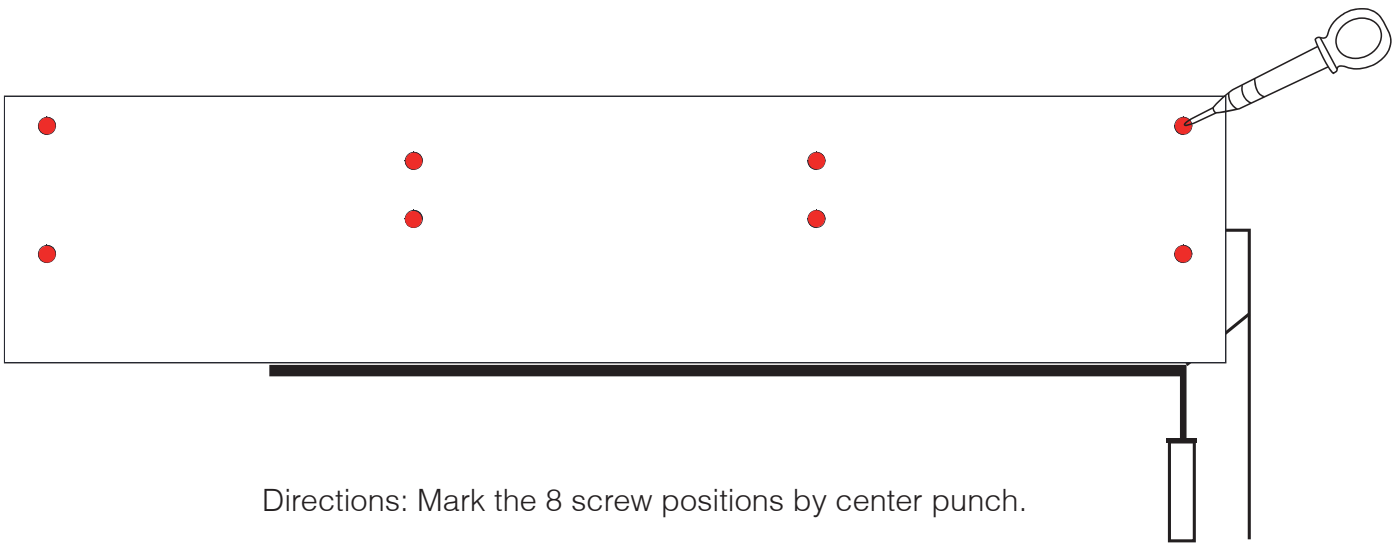

Directions: Mark the 8 screw positions by center punch.

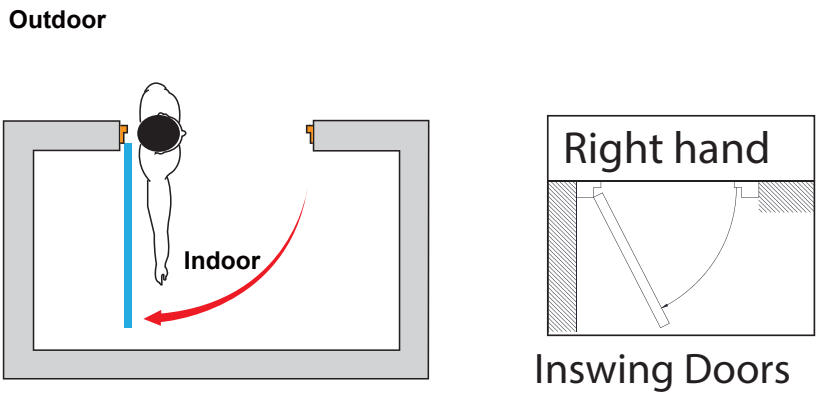

7-10

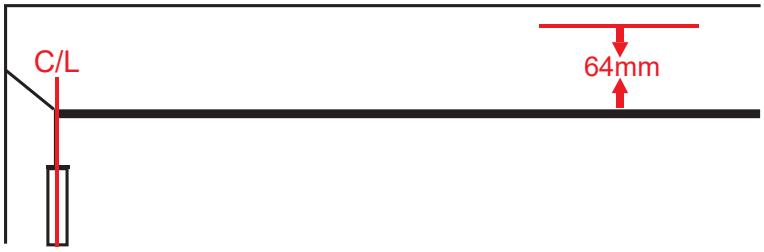

Directions: Check the door hinge centerline, and the two reference lines that are 64 mm away from the bottom line of the header frame.

Note the centerline of hinge on the template.

7-11

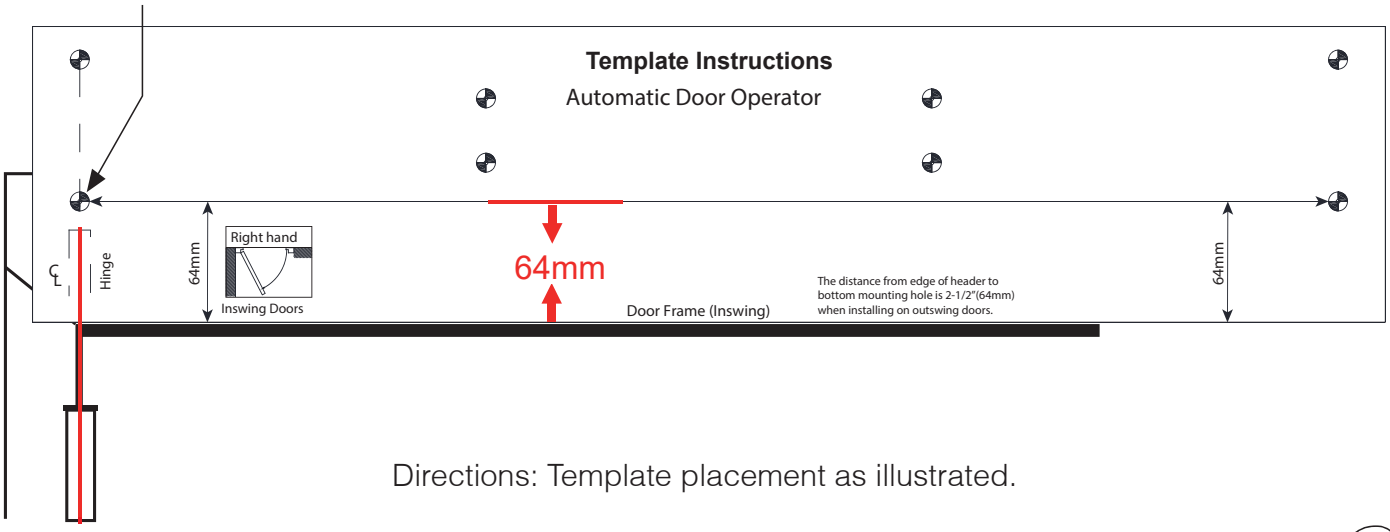

Directions: Template placement as illustrated.

7-12

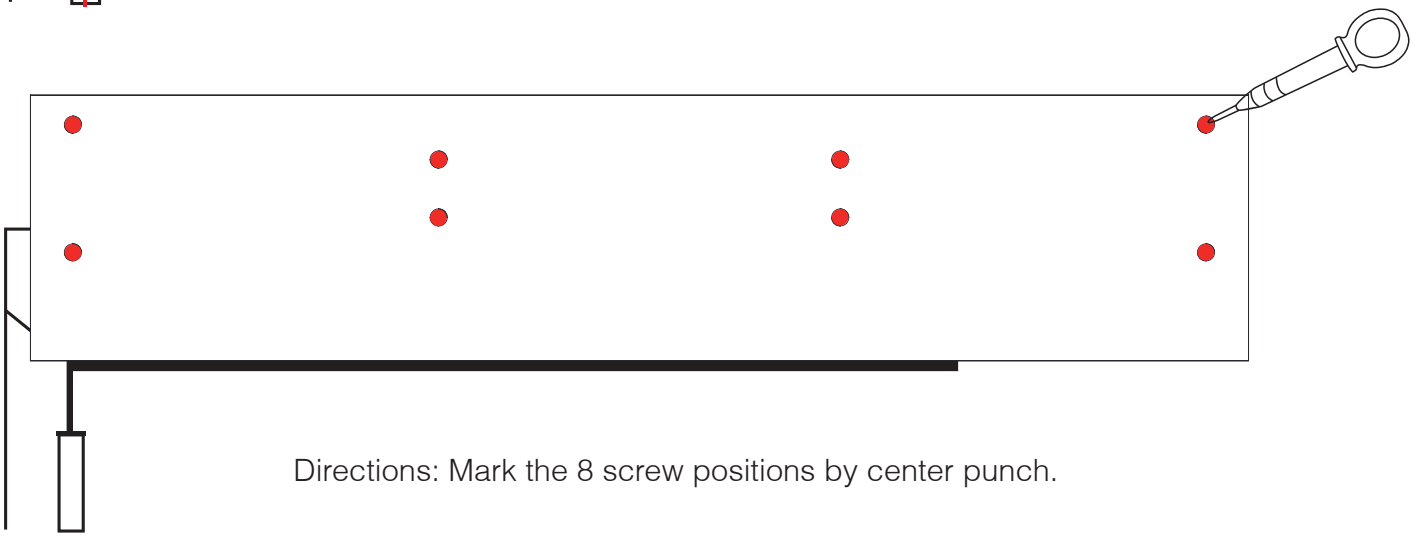

Directions: Mark the 8 screw positions by center punch.

8. Installation Preparation by Frame Types

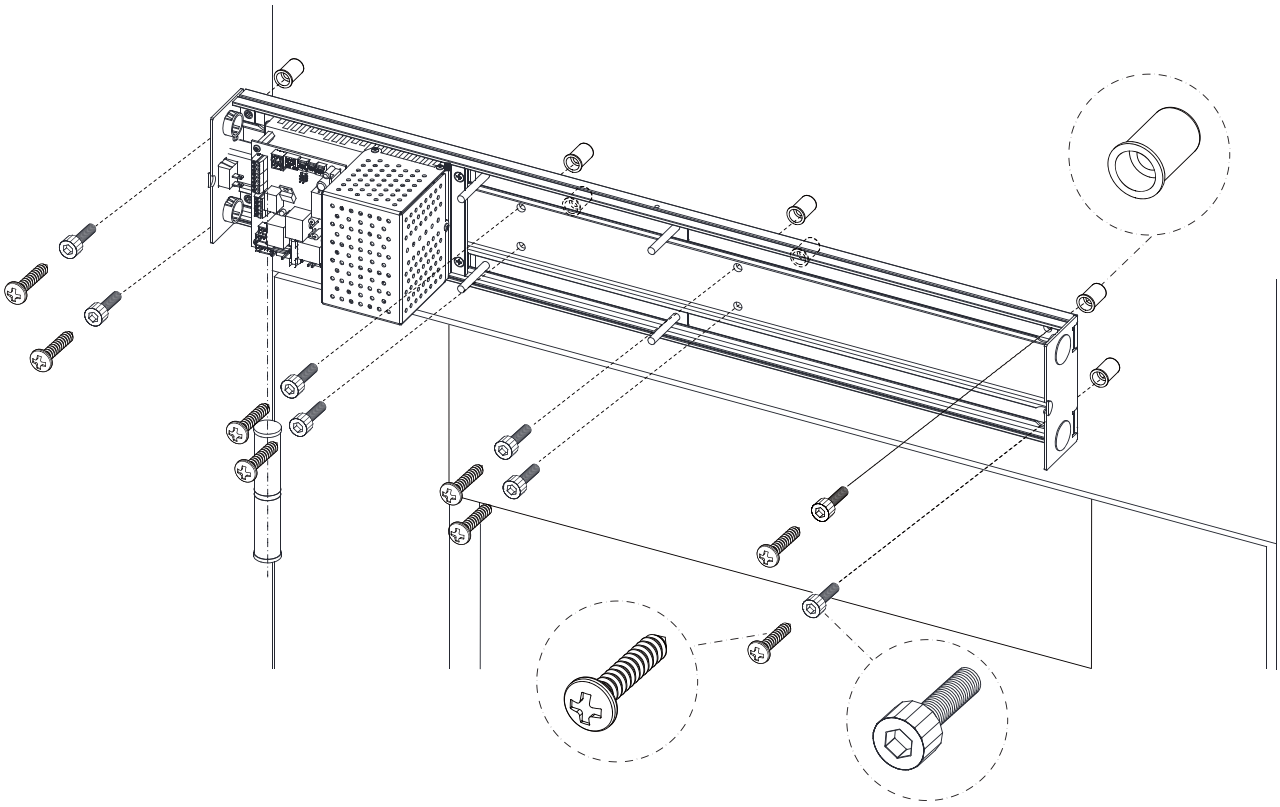

8-1 Hollow Metal Frames

Installing Blind Nuts

① Blind Nut Assembly

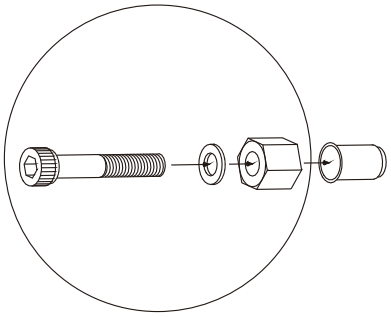

②

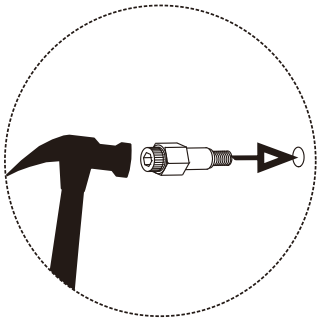

③

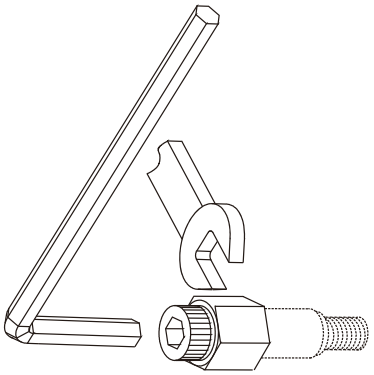

④

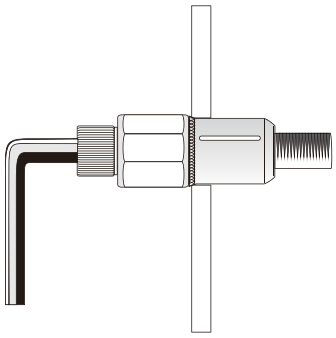

⑤

Use blind nuts for reinforcement. Drill 9.5mm holes. Hammer blind nut assembly. Tighten with a 12 mm C type wrench and a 5 mm Allen wrench. Remove the tools. The blind nut is countersunk into the metal plate. The operator base plate is secured to the frame.

8-2 Reinforced Metal Frames

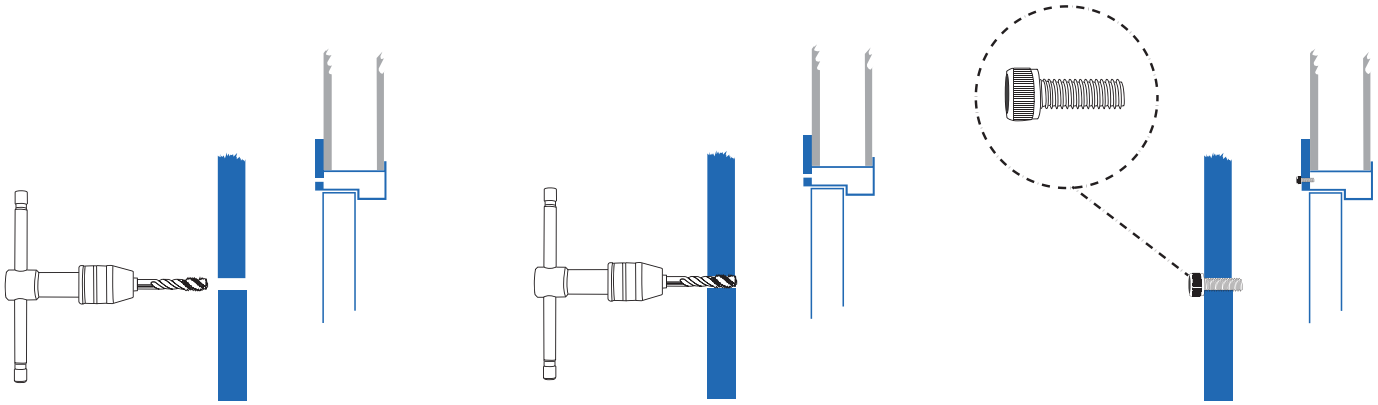

If installing on thin wood or partition boards, a thicker metal plate needs to be added to enhance the sturdiness of the installation site.
Drill 5.1 mm holes and tap with 6 mm drill bit. Secure the base plate to the frame.

8-3 Solid Wood Frames

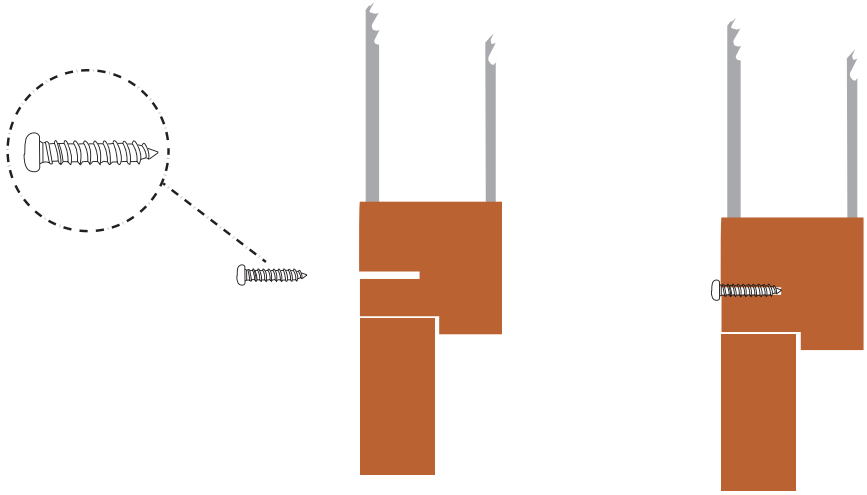

For solid wood frames. Drill 4 mm holes first. Fix Phillips screws.
Secure the base plate to the frame.

8-4 Concrete Walls

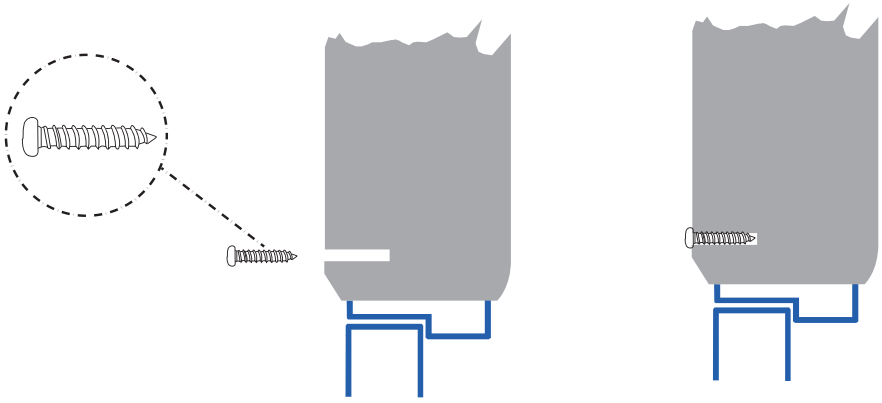

Drill with 5 mm masonry drill bit.
Fix Phillips screws. Secure the base plate to the frame.

9. Base Plate & Reducer Installation

Secure the base plate to the door frame. Reducer is secured to the base plate with 4 screws. Please see below instructions for each door swing direction. Reducer opening angle ranges from 0 to 90 degrees.

9-1 Left Hand Outswing Doors

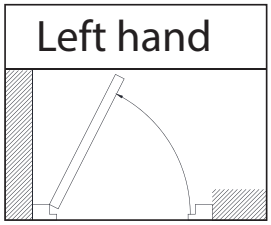

Outswing Doors

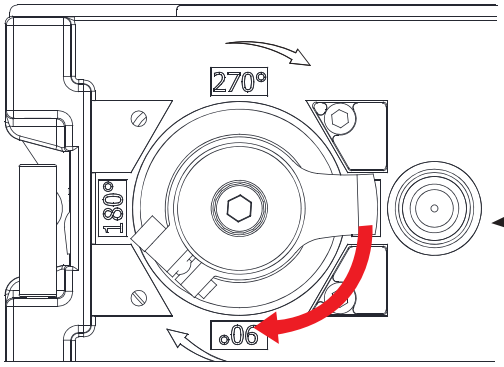

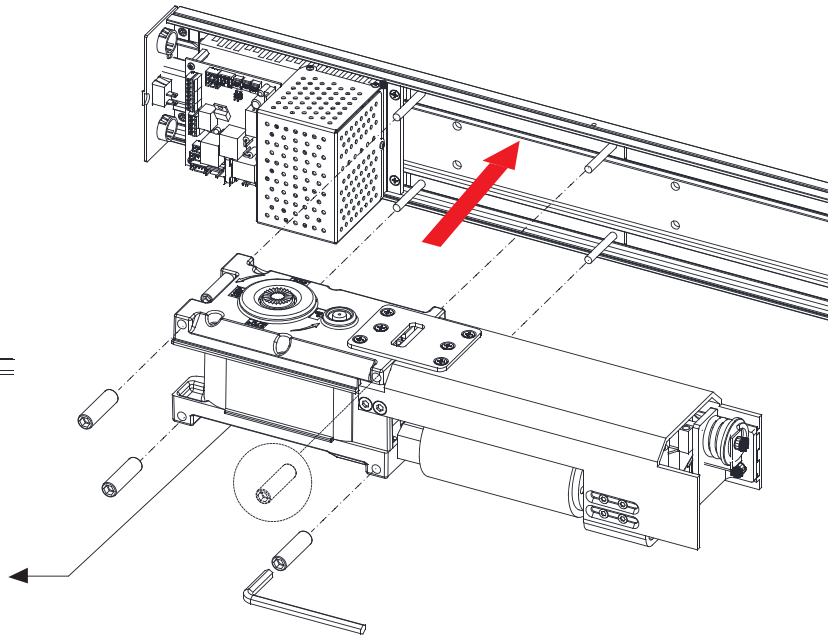

9-2 Right Hand Outswing Doors

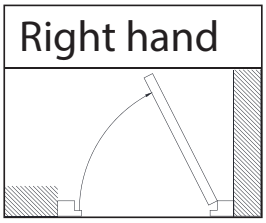

Outswing Doors

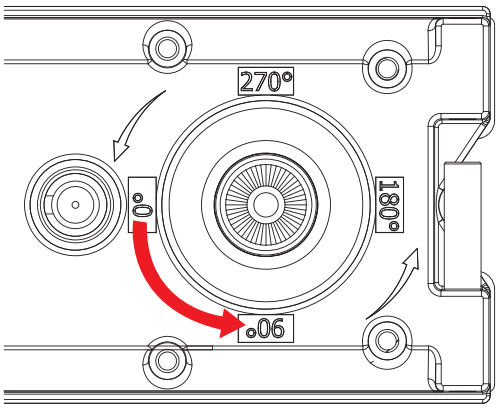

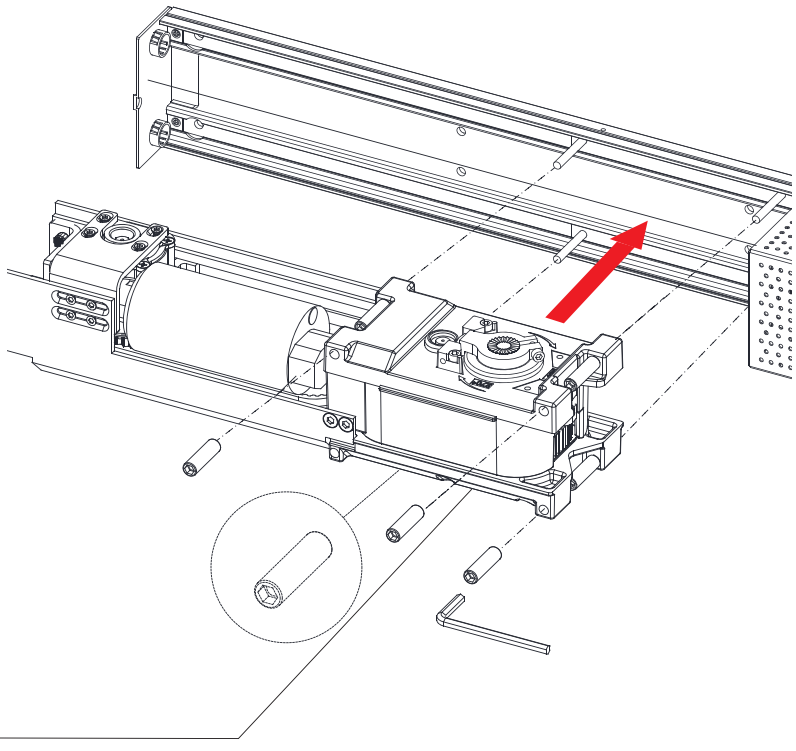

9-3 Left Hand Inswing Doors

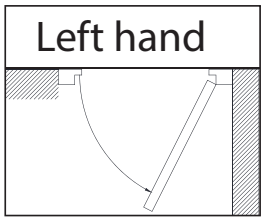

Inswing Doors

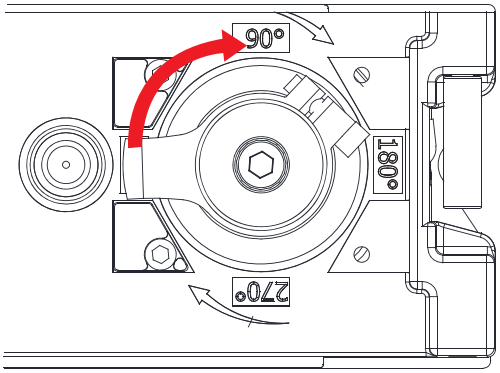

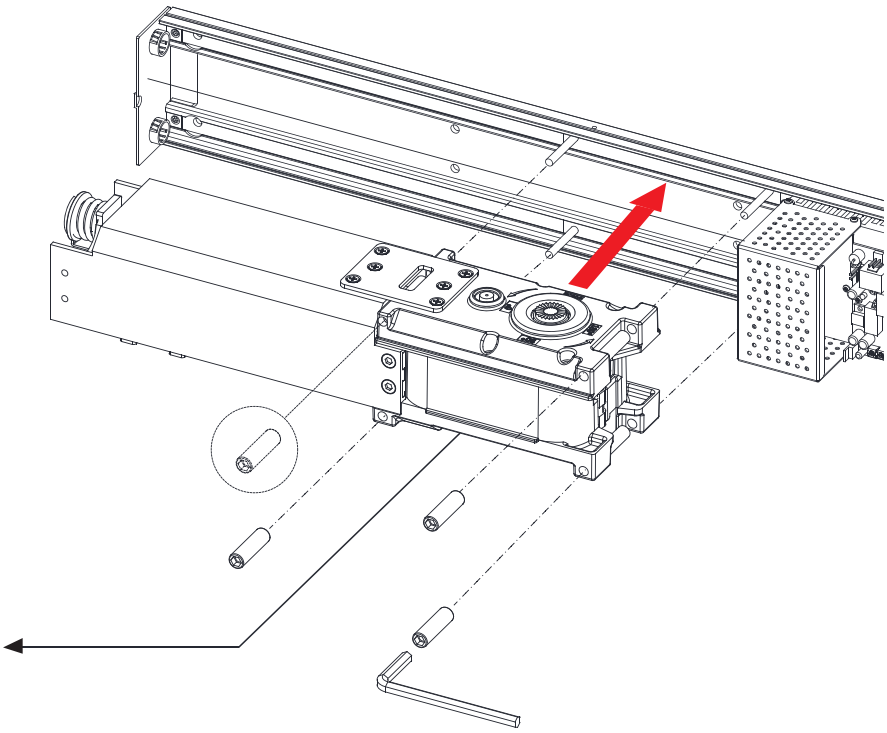

9-4 Right Hand Inswing Doors

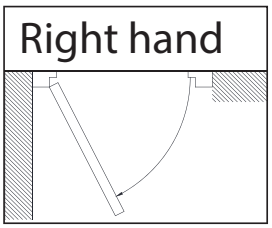

Inswing Doors

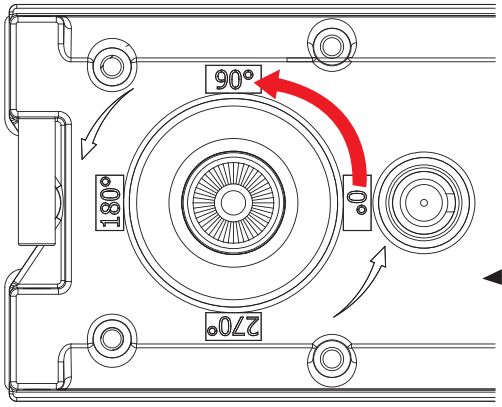

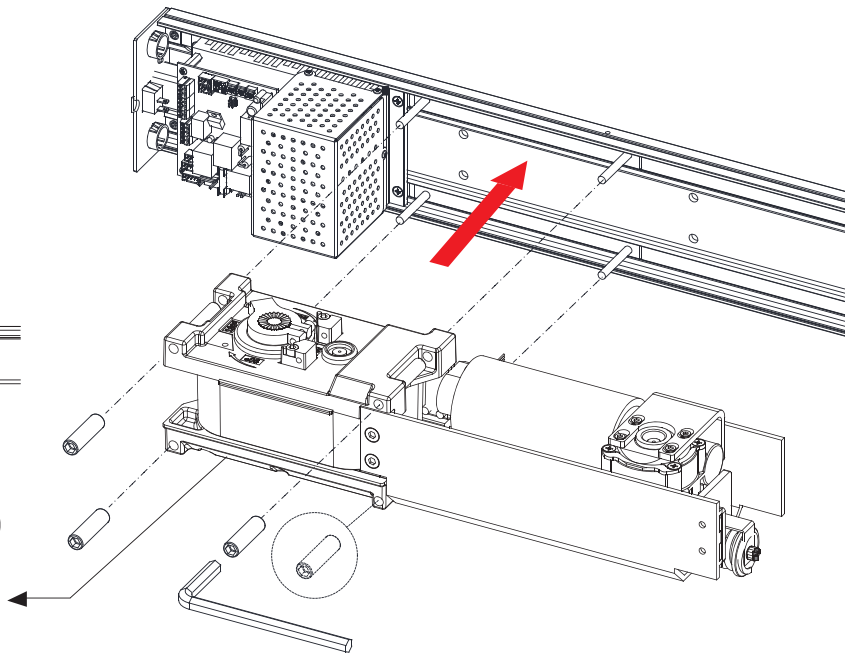

9-5 Leveling and Adjustments

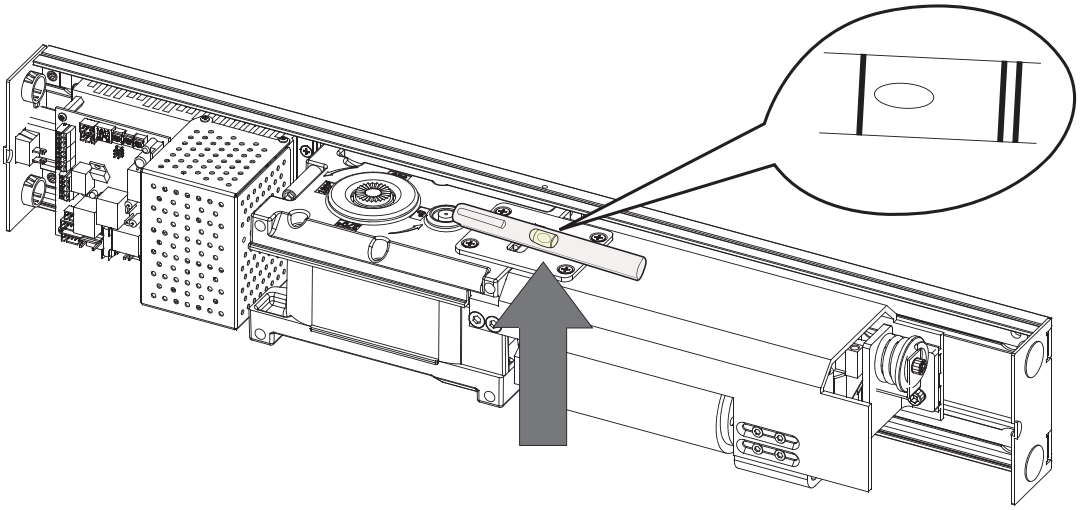

◆ Use a spirit level to check the leveling of the operator in the direction parallel to the wall per shown above and adjust accordingly.

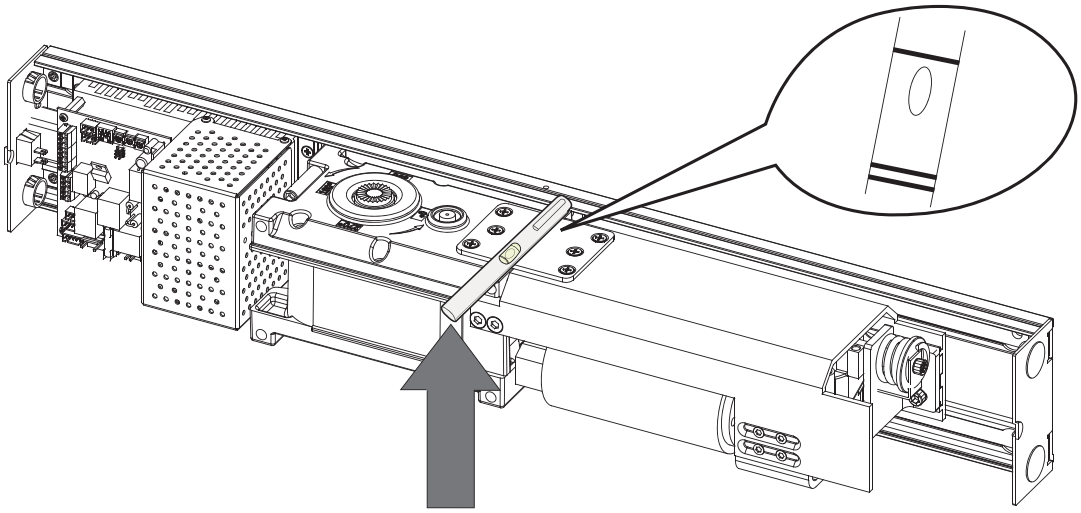

◆ Check the leveling in the direction perpendicular to the wall per shown above and adjust accordingly.

Above steps are important in making sure that the operator operates as intended.

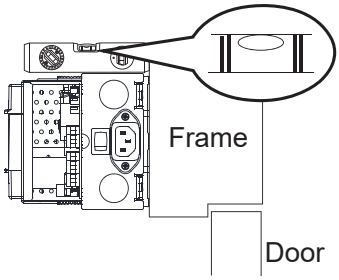

If the operator body obviously slants to the right. Loosen the reducer and adjust the levelness on the right side. In the same way. If the operator body obviously slants to the left. Loosen the reducer and adjust the levelness on the left side.

Tighten the screws firmly once leveling is complete.

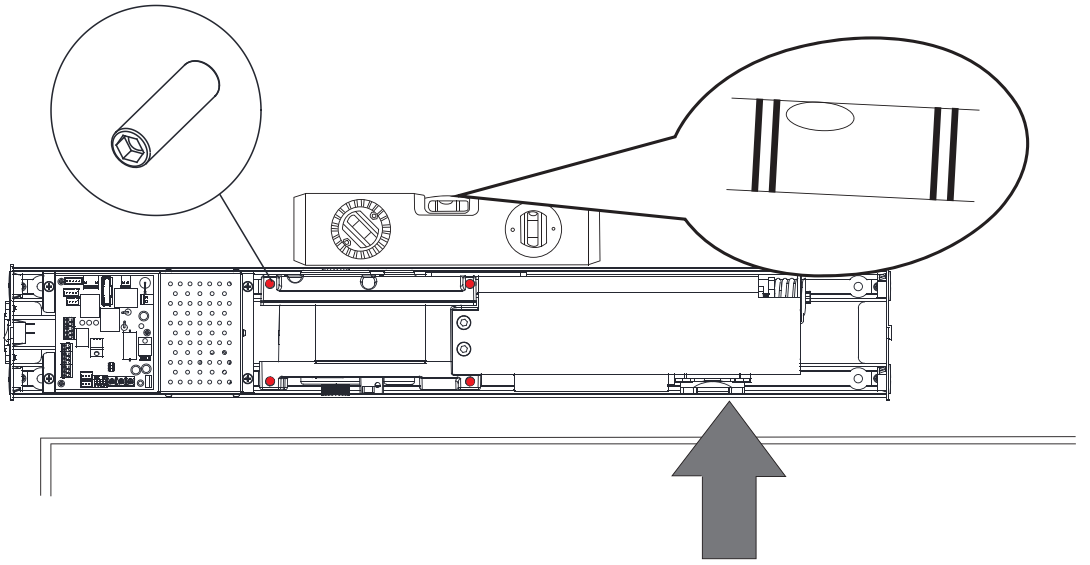

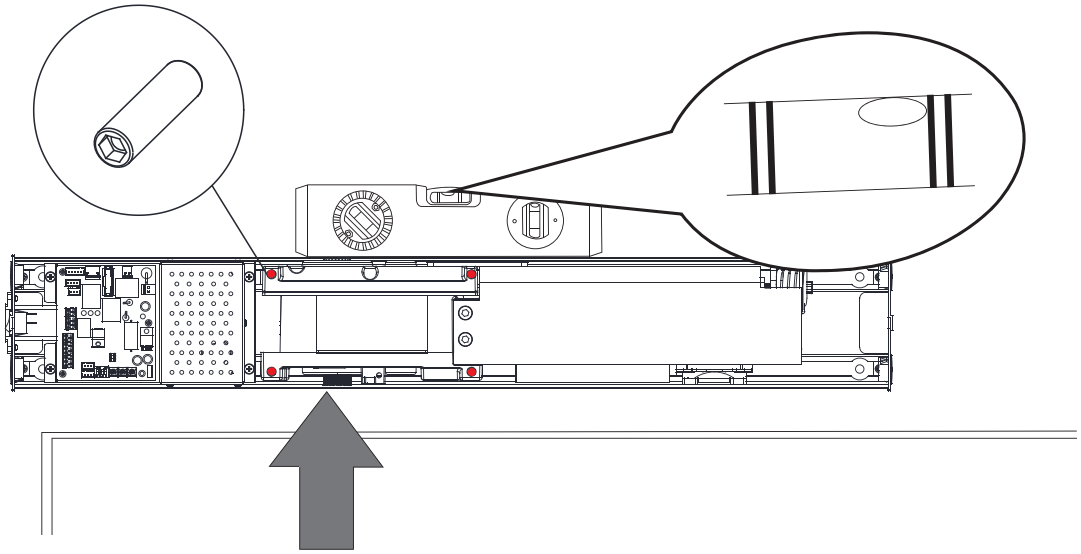

9-6 Connect Power and Operation Controller

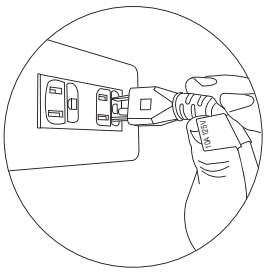

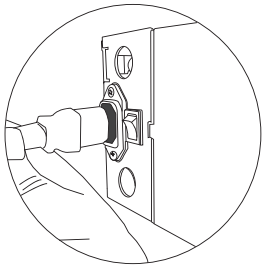

Connect 110 VAC or 220 VAC power.

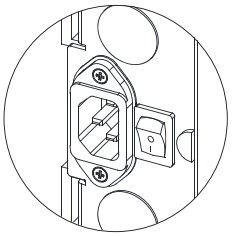

Turn on the power switch on operator. Press the exit button on the operation controller to test the motor operation.

10. Push Arm Assembly Installation (For Outswing Doors)

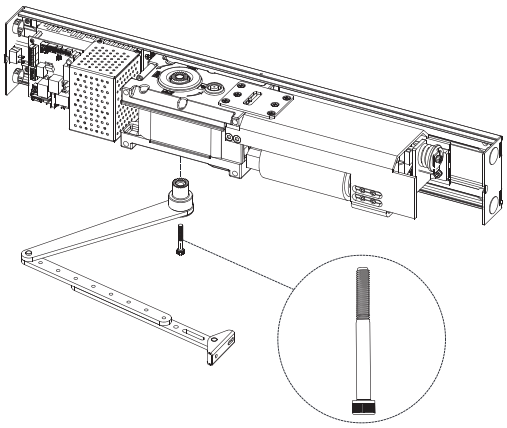

10-1 Turn off power before installing the arm assembly.

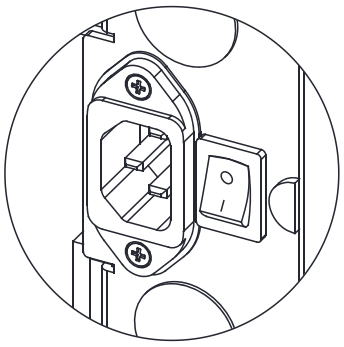

10-2 Gently install the first and second arm with pivot post onto the operator body.

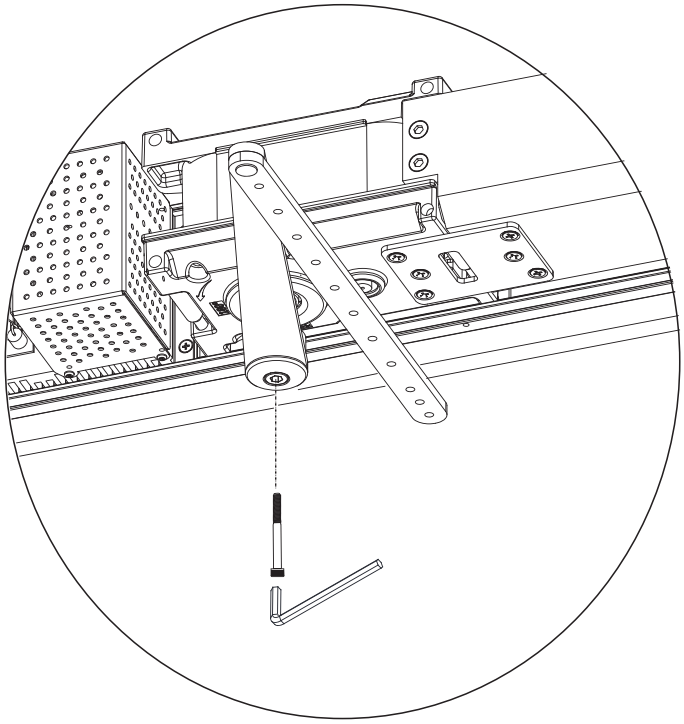

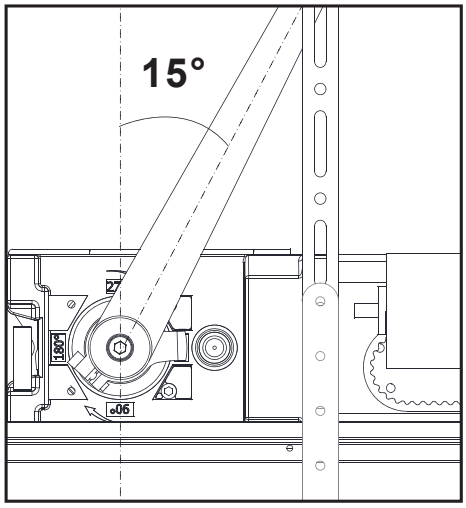

The first arm and pivot post should be kept at a 15 degrees angle (approximately) according to the illustrated door handing when installing the first arm to the operator body. Assemble the first, second and third arm.

Adjust the third arm and door leaf to approximately a 90-degree angle and then tighten all the screws.

10-3 Fasten the third arm to the door leaf per template. If adding the shaft extensions, note the position is different.

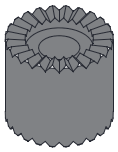

P/N : DT-20

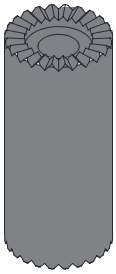

P/N : DT-50

P/N : DT-70
(DT-20+DT-50)

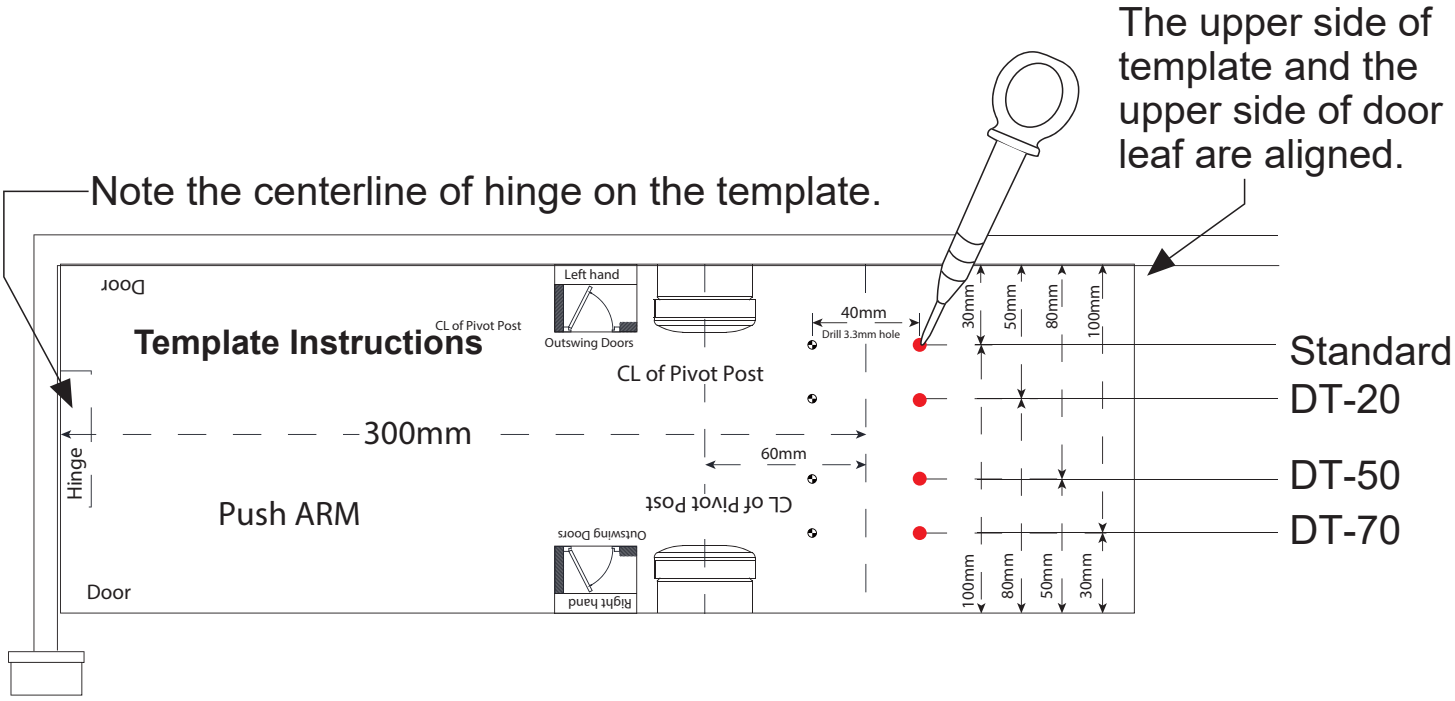

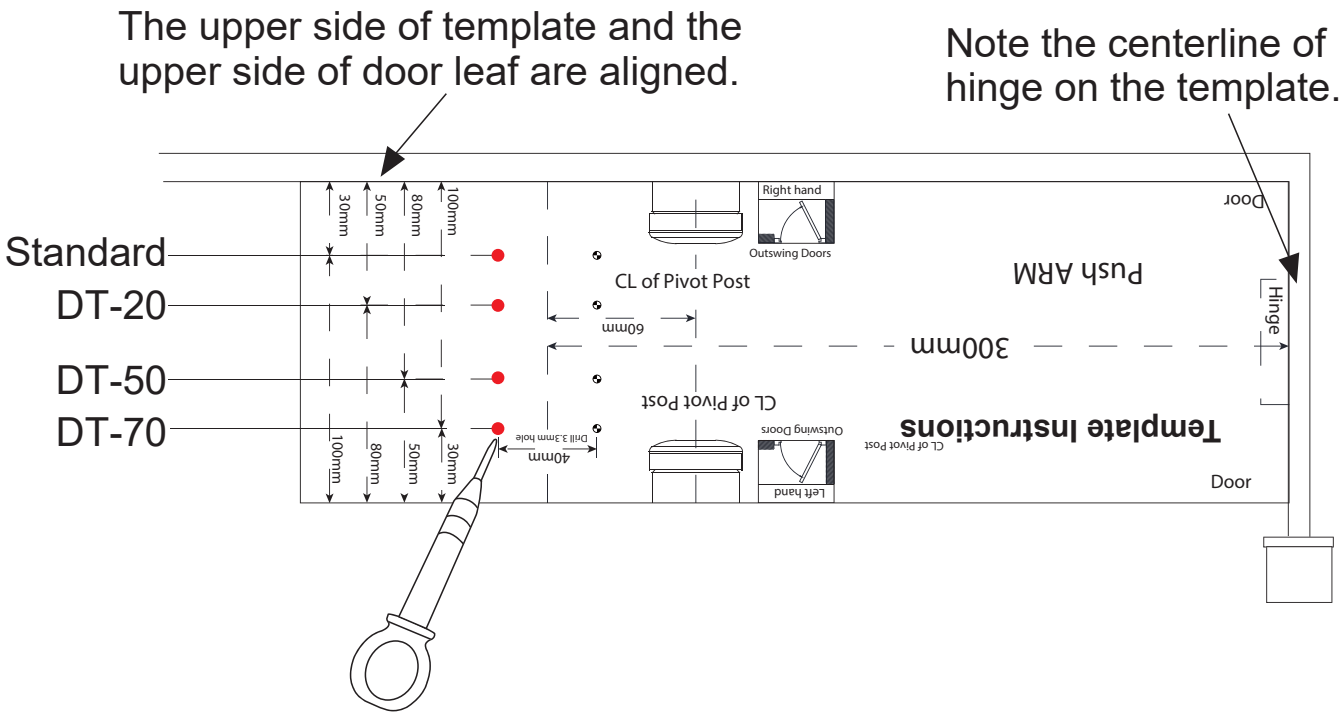

10-4 Secure the third arm to the door leaf, and assemble the first, second and third arm (screw gently). When assembling, make sure the door is tightly shut.

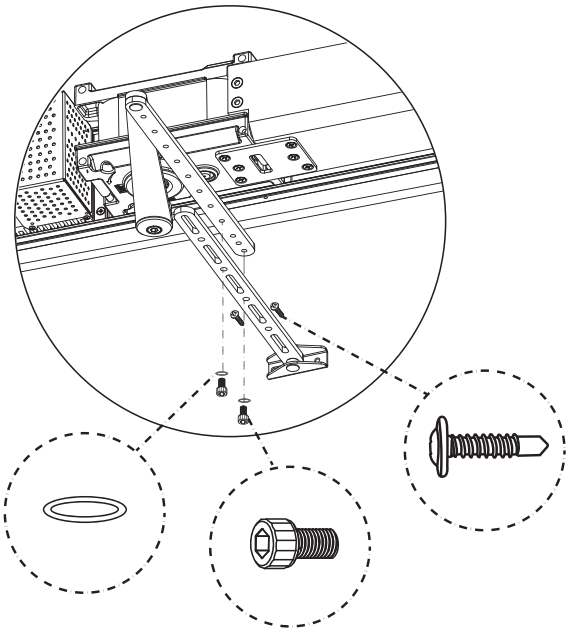

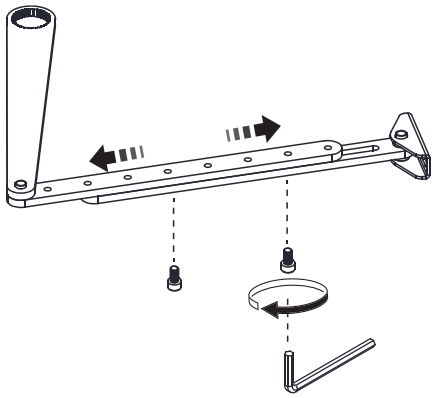

Note: adjust second and third arm according the door depth. Keep the third arm at right angle to the door leaf.

10-5 Open the door such that the arm is at 90 degrees and check the leveling per shown on the right using a spirit level and adjust leveling accordingly.

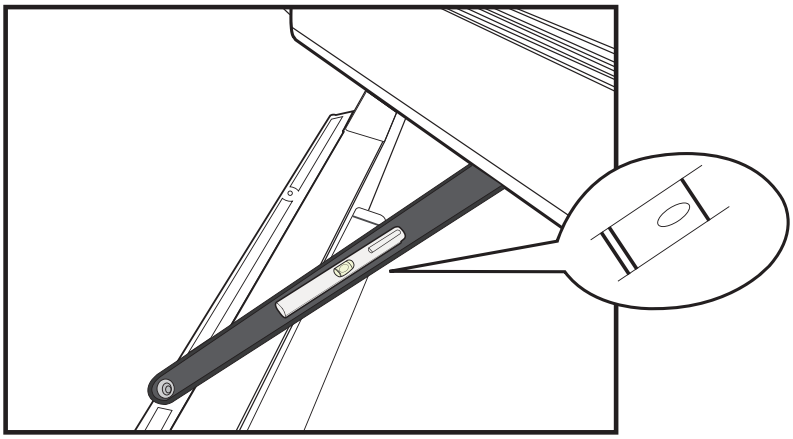

10-6 It is optimal that the third arm and the door leaf kept at approximately 90 degrees right angle.

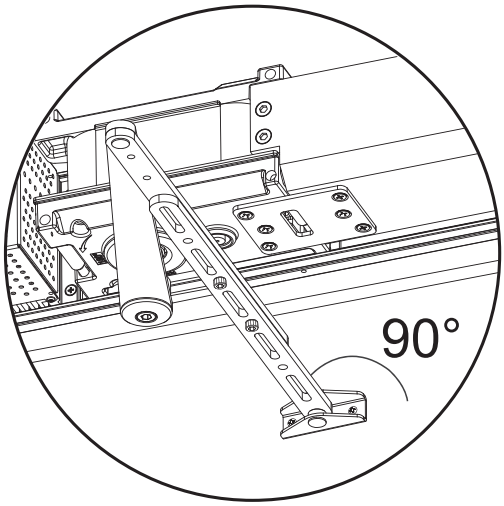

Tighten all screws after adjustment.

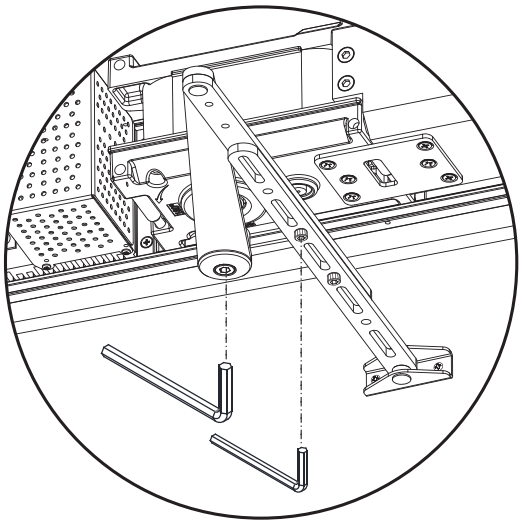

11. Sliding Arm Assembly Installation (For Inswing Doors)

11-1 Turn off power before installing the arm assembly.

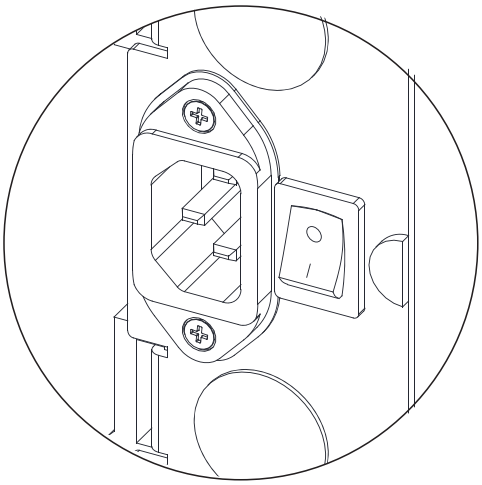

11-2 Align the centerline of pivot post. The upper edge of the template is aligned to the upper edge of door leaf. Note the centerline of pivot post on the template.

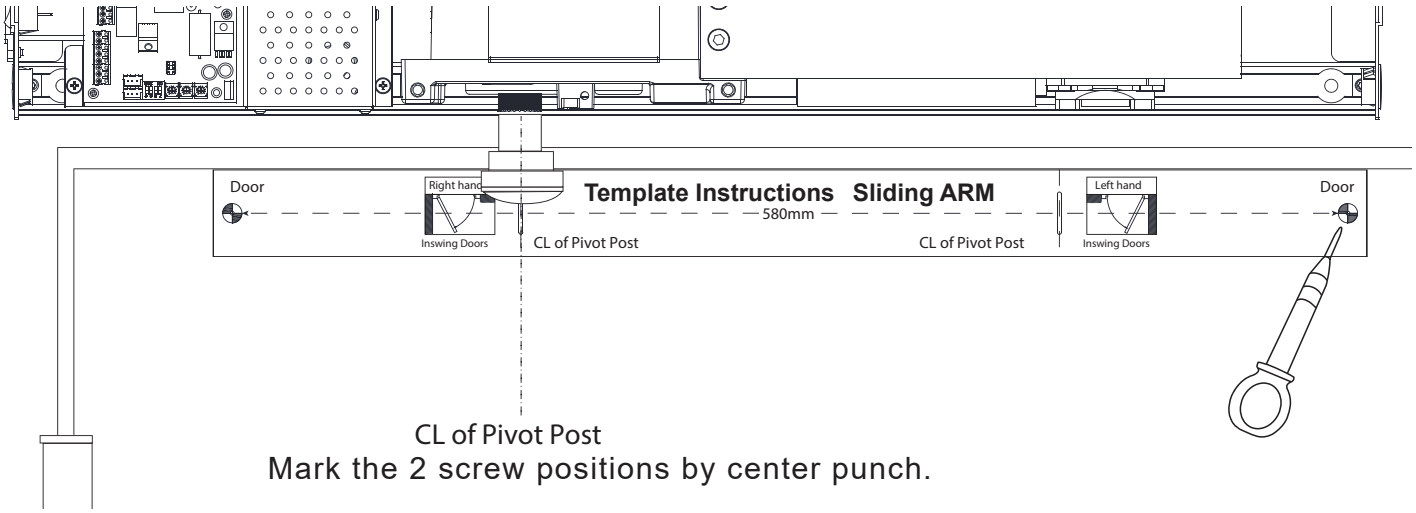

Mark the 2 screw positions by center punch.

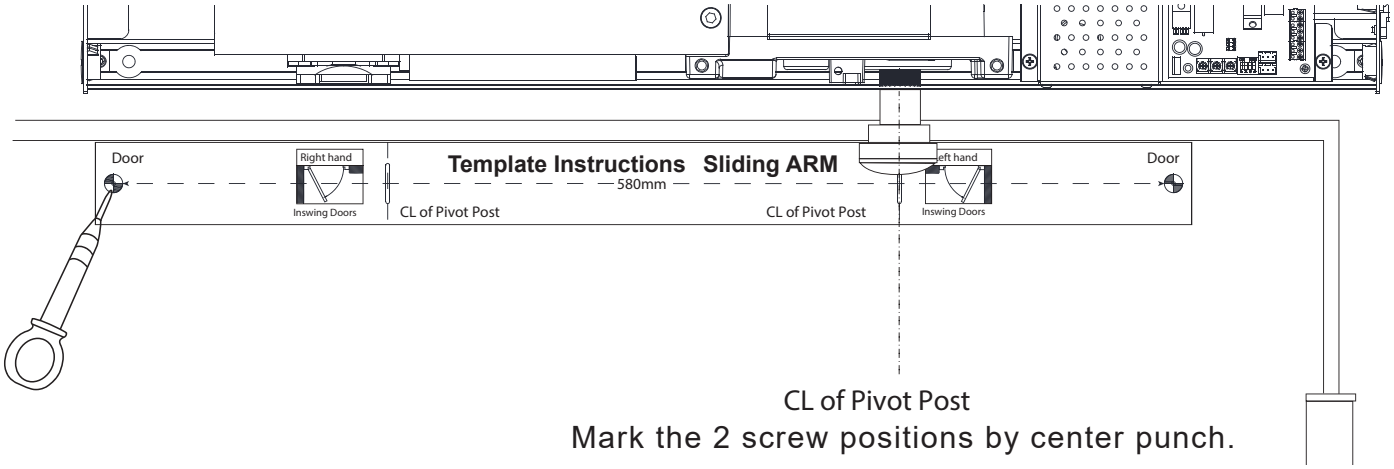

Mark the 2 screw positions by center punch.

11-3 Fasten the arm to the operator body using the pivot post.

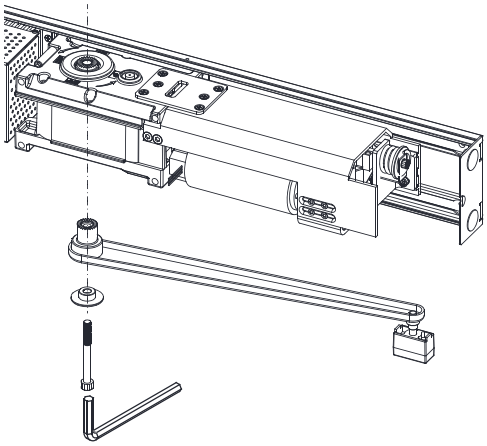

11-4 Open the door such that the arm is at 90 degrees and check the leveling per shown below and adjust leveling accordingly.

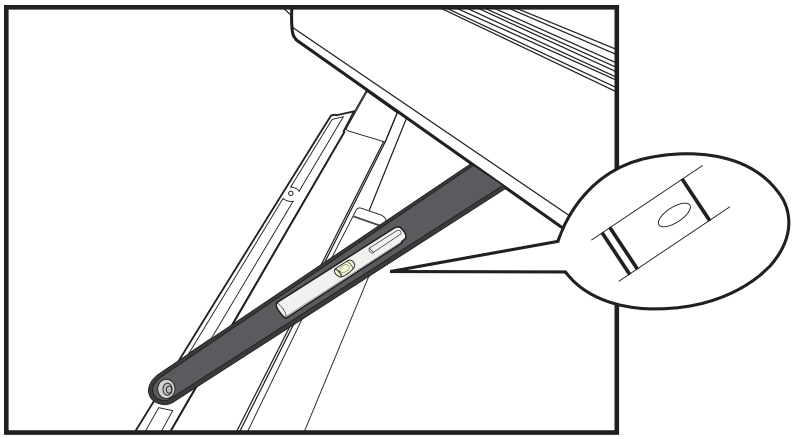

11-5 Assemble the track assembly and sliding arm.

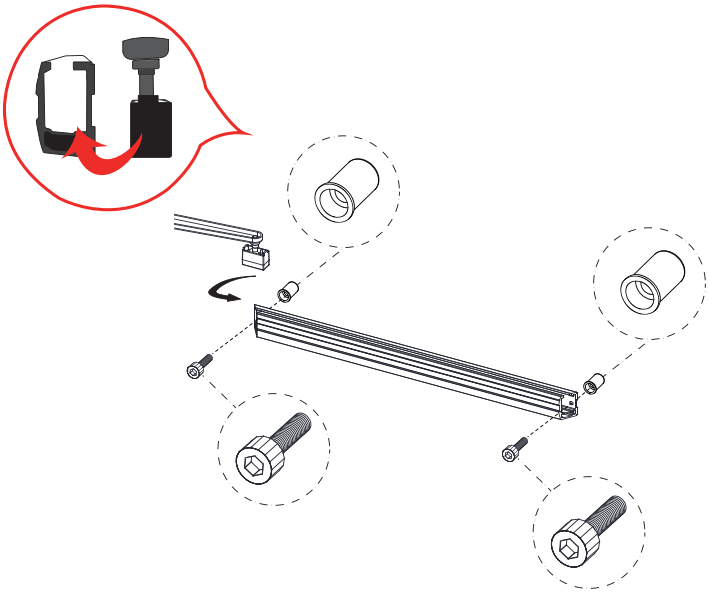

11-6 Put the track block into the track assembly. Place the block with the black rubber side facing the track assembly. The track block installation is up and down rever

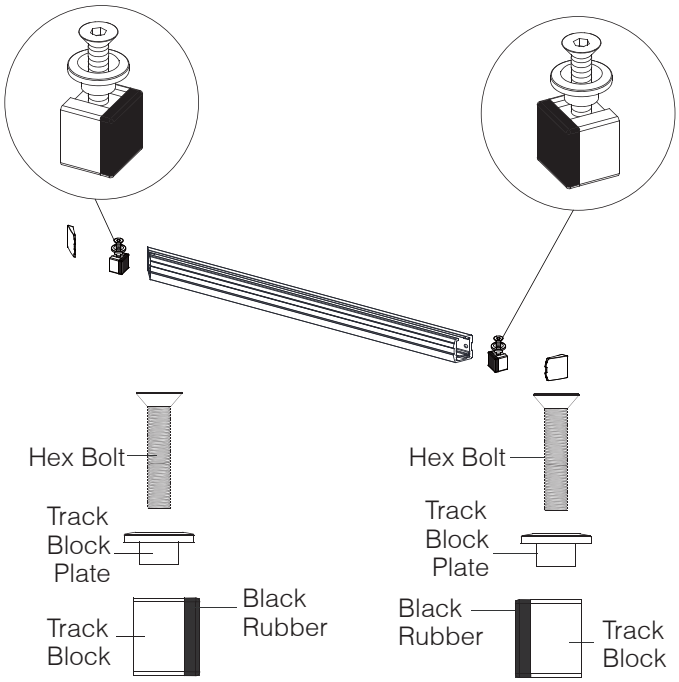

11-7 Use the track block to adjust the opening angle if necessary.

The track block is used for setting the maximum door opening angle.

If the opening angle is not wide enough, then loosen with an Allen key to adjust to the desired angle and restart "Learning Mode" again.

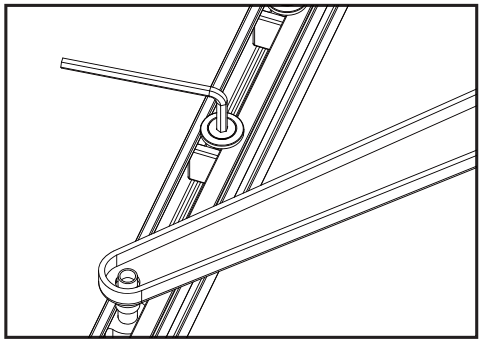

12. Learning Mode

1. After turning on power, D17/D18 LED on the board both light on and off indicating the motor is energized and proceeds to "Learning Mode".
2. Press the exit button on the operation controller, the Automatic Door Operator first activates and proceeds with the Learning Mode.
3. The Learning Mode establishes the regular operation procedure by learning the environmental factors such as door leaf weight or opening angle.
4. If obstruction occurs during the Learning Mode such as warped frames or misaligned doors, the motor force increases, allowing the door to move forward.
5. Depending on the door size or weight and wind pressure, adjust the SVR1 (back check angle), SVR2 (closing speed) and SVR3 (opening speed) to the optimal condition.
6. Adjust the hold-open time (3/10/20/30 seconds) by using DIP switch on the PC board.
7. Install the cover and pivot arm plug to complete installation.

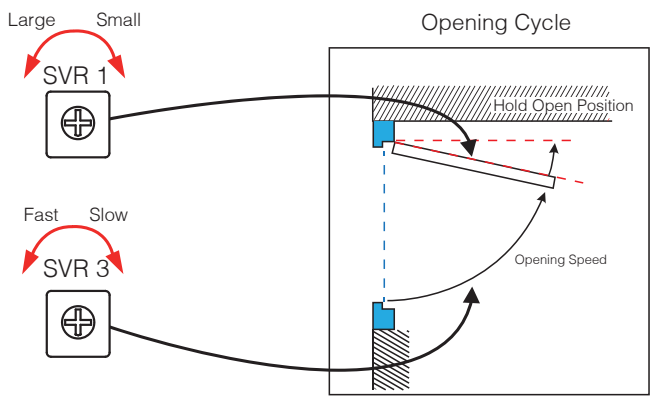

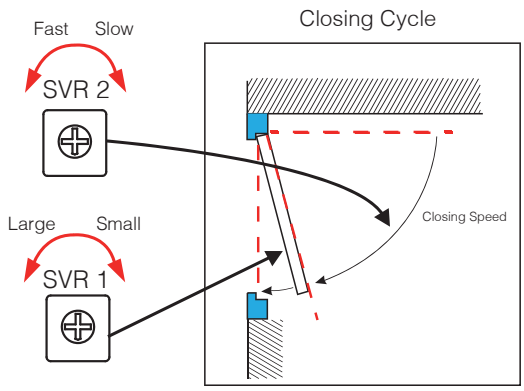

13. Operation Controller

Use with control box for ease of operation.

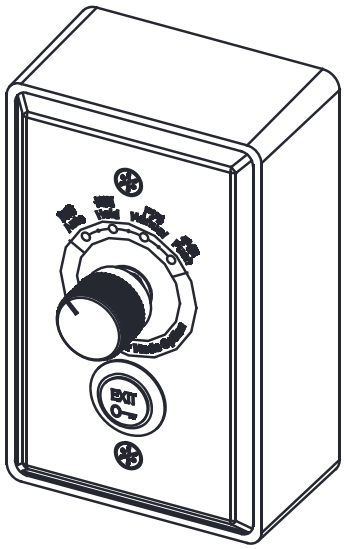

Auto Mode:
Press the exit button.
The Automatic Door Operator opens and closes automatically.

Hold Mode:
Press the exit button.
The Automatic Door Operator holds the door open.
For heavy traffic, the Automatic Door Operator changes to Auto operation allowing the door to close.

Manual Mode:
Power to the Automatic Door Operator is turned off.
The Automatic Door Operator is used as a manual door closer.

Push Mode:
Push the door slightly and then Automatic Door operator is in Auto Mode.
When in Push Mode, the electric lock remains unlocked.

14. Optional Accessories

The AD-500 works with a variety of optional accessories as suggested below. The relay output contacts (COM/NO) are connected to Device Activation 2 or 3 input terminal on the PC board . Use the included 2-pin red/black wire harness. Please refer to the wiring diagram on page 5 (Control unit).

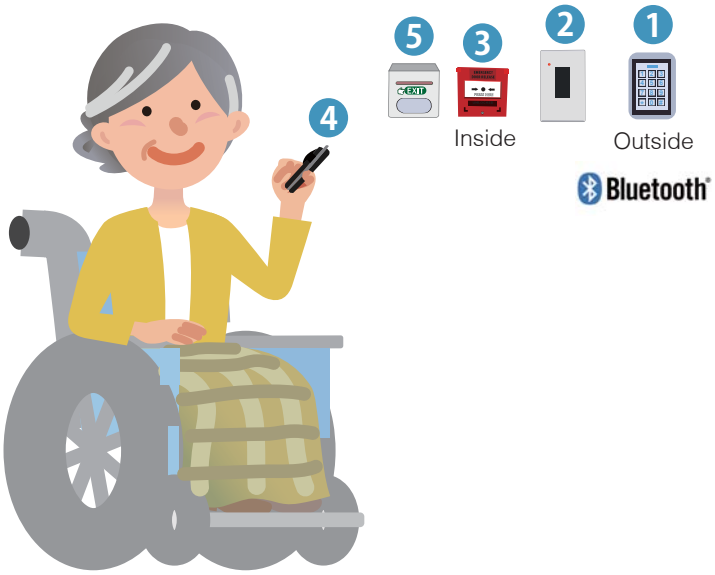

1 Bluetooth

Bluetooth Reader/Keypad

2

Wave Sense Infrared Exit Device

3

Call Point

4

Wireless Exit Device

5

BlueSwitch

6

Microwave Sensor Switch

7

Electromagnetic Lock

8

Infrared Safety Sensor

Visit www.gianni.tw
or contact us for more information.

15. Trouble Shooting & Maintenance

Problem		Possible Cause	Solution
The door opens and closes repeatedly.		Moving objects detected.	Check if the switch contacts of Activation Device 2 and 3 are working properly. Remove the moving object.
The door automatically stops before reaching the preset destination.		Data in the encoder is incorrect.	Contact your local distributor.
		The AD500 stops operating automatically if door opening is obstructed repeatedly for three times.	The AD500 returns to operation after 10 seconds.
		The AD500 stops operating automatically if door closing is obstructed repeatedly for three times.	Make sure that the door swings freely without any obstruction.
		Insufficient power output	Make sure that power input is working properly.
LED Not working	DC (D8)	Fuse burn out.	Replace fuse (250V, 5A).
		Wires loose.	Check the wiring.
		No power.	Check the power supply.
	Motor (D17/D18)	Relay damage.	Contact your local distributor to check the relay.
The power switch light doesn't turn on.		Wick damage.	Contact your local distributor to replace the wick.

Turn the power off. Please ensure all switches are "OFF"

- Clean and lubricate all moving components.
- Check that all screws are well tightened.
- Check all wiring is working normally.

Turn the power on. Please ensure all switches are "ON".

- Check the door stability and movement is steady, without friction from full open to full close position.
- Check the hinge condition.
- Check all controls are properly functioning.
- Normal Operation:

  In case of maintenance, malfunction or emergency, please ensure the power is "OFF" and the operator works manually. For safety reasons, we suggest installing this operator with a Fail-Safe electric lock.

16. Notes for Engineers (If Not Using Operation Controller)

If the operation controller is not in use, please refer to the following wiring instructions.

Functions on the Control Unit (see also page 5)

Function	Description	Diagram
Automatic Mode (Locked status)	Operator opens the door when receiving an activation signal and closes the door automatically. *Default setting: Automatic mode	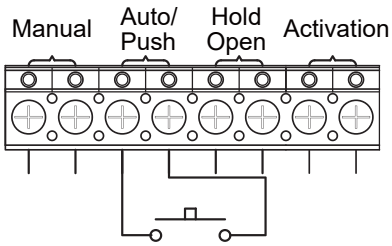
Push Mode (Unlocked status)	As door is pushed open slightly, the operator senses door movement and opens the door to the full-open position.	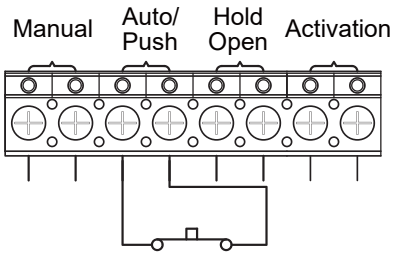
Manual Mode (ON status)	Door can be manually opened and then closed automatically.	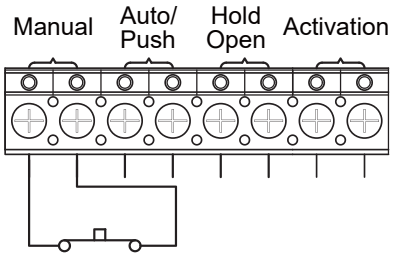
Manual Mode (OFF status)	Door is opened and closed manually	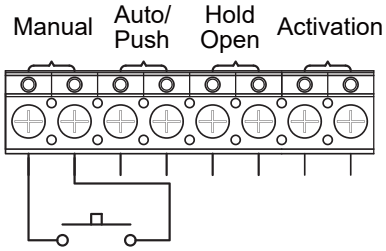
Hold Open (ON status)	Door can be held open after the operator opens the door to the full-open position.	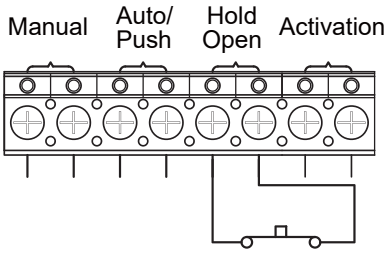
Hold Open (OFF status)	Door cannot be held open after the operator opens the door to the full-open position.	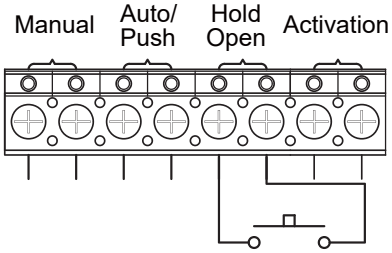

Functions on the Control Unit (see also page 5) (Continued)

Function	Description	Diagram
Activation Input 1 (ON status)	Operator is activated by Activation Device 1.	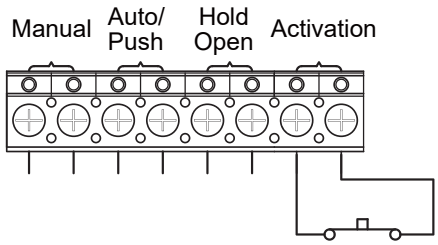
Activation Input 1 (OFF status)		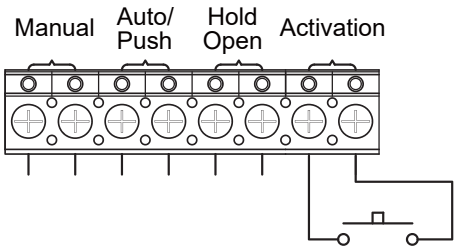

Functions on the Control Unit (DIP Switch Settings) (see also page 5)

In Automatic Mode, there is a 0.7 second delay in motor starting following the activation of push button and electric locking device.

ON/OFF Position	Instructions
Changing mode of operation	
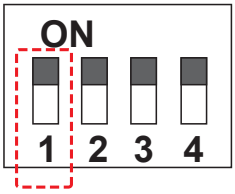	1 Automatic Mode Manual Mode
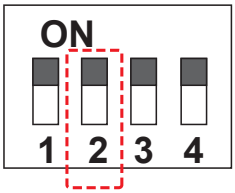	2 (Only applies if 1 is set to Automatic Mode) Push Mode Automatic Mode

Functions on the Control Unit (Potentiometer Settings) (see also page5)

Potentiometer Rotation	Instructions
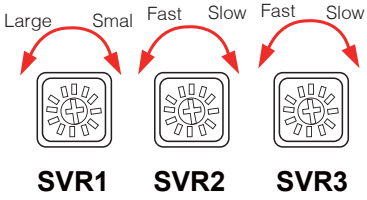	**SVR1** - Adjust the back check/ latch check angle. Turning clockwise decreases the backcheck/latchcheck angle. **SVR2** - Adjust the closing speed.Turning clockwise decreases the closing speed. **SVR3** - Adjust the opening speed. Turning clockwise decreases the opening speed.

17 Safety Instructions for Users

The following instructions are essential to users.
Read these instructions carefully as they contain important information about safety and maintenance.

- These instructions must be accessible to all potential users.
- The product must be used in visible places.
- GEM is not responsible for any damage caused by improper use of the unit.
- Do not use in conjunction with other door closers.
- Do not place any obstacles in the door path when operating.
- Do not allow children to play with the AD500. Keep remote control or any other control device out of reach of children to avoid accidents.
- Work on electrical equipment may only be performed by qualified electricians.
- Contact qualified professionals to make regular maintenance checks. All installation, maintenance and repair work must be documented and made available to users.

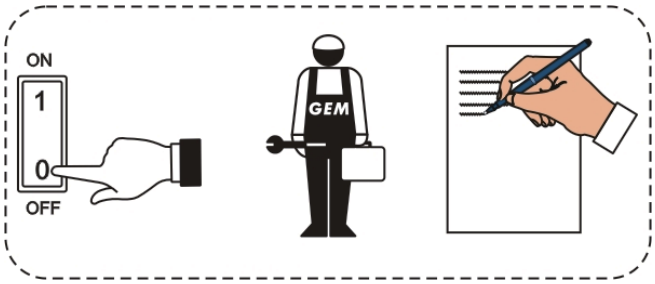

AD500

Automatic Door Operator
Instruction Manual

Copyright © All Rights Reserved.
P-MU-AD500 Published: 2022.09.28