# ECLYPSE APEX




ECLYPSE™

## Product Description

The ECLYPSE APEX is a powerful IoT Edge controller that offers enhanced performance and dedicated spaces to IoT and AI developers. It facilitates HVAC system maintenance, increases efficiency of equipment and optimizes energy consumption by leveraging the latest available technology on site.

## General Installation Requirements

For proper installation and subsequent operation of each controller, pay special attention to the following recommendations:

- ☐ Upon unpacking the product, inspect the contents of the carton for shipping damages. **Do not install damaged modules.**
- ☐ Avoid areas where corroding, deteriorating or explosive vapors, fumes or gases may be present.
- ☐ Ensure the mounting surface can support the controller, DIN rail, and any user-supplied enclosure.
- ☐ Allow for proper clearance around the controller's enclosure, wiring terminals, and HOA switches to provide easy access for hardware configuration and maintenance, and to ventilate heat generated by the controller.
- ☐ The controller's mounting orientation must be horizontal with the controller's back attached to a vertical wall surface. Orient the controller with the ventilation slots and power supply input terminal block connectors towards the top to permit proper heat dissipation. When installed in an enclosure, select one that provides sufficient surface area to dissipate the heat generated by the controller and by any other devices installed in the enclosure. A metal enclosure is preferred. If necessary, provide active cooling for the enclosure.
- ☐ The controller's Specsheet specifies the power consumption (amount of heat generated), the operating temperature range, and other environmental conditions the controller is designed to operate under.
- ☐ Ensure that all equipment is installed according to local, regional, and national regulations.
- ☐ If the controller is used and/or installed in a manner not specified by Distech Controls, the functionality and the protection provided by the controller may be impaired.
- ☐ SELV (Separated Extra Low Voltage) inputs/outputs must be connected to other SELV equipment inputs/outputs.
- ☐ It is recommended that the controller(s) be kept at room temperature for at least 24 hours before installation to allow any condensation that may have accumulated due to low temperature during shipping/storage to evaporate.
- ☐ Do not drop the controller or subject it to physical shock.



Any type of modification to any Distech Controls product will void the product's warranty.



Take reasonable precautions to prevent electrostatic discharges to the controller when installing, servicing or operating the controller. Discharge accumulated static electricity by touching one's hand to a well-grounded object before working with the controller.

DISTECH CONTROLS™

# Device Markings (Symbols)

Certain markings (symbols) can be found on the controller and are defined as follows:

| Symbol | Description |
|---|---|
| CE | CE marking: the device conforms to the requirements of applicable EC directives. |
| UKCA | UKCA marking: the device conforms to the requirements of applicable Great Britain regulations. |
|  | Double Insulation marking: These controllers are built using double insulation. |
|  | Products must be disposed of at the end of their useful life according to local regulations. |
|  | Read the Hardware Installation Guide for more information. |
|  | For indoor use only. |
| c UL us LISTED | UL marking: conforms to the requirements of the UL certification. |
| FC | FCC marking: This device complies with FCC rules part 15, subpart B, class B. |
|  | Warning Symbol: Significant information required. Refer to the Hardware Installation Guide. |
|  | HIGH VOLTAGE Symbol: Direct contact will cause electrical shock or burn. |
|  | Alternating Current |
|  | Direct Current |
| L | Line |
| N | Neutral |

# General Wiring Recommendations



Risk of Electric Shock: Turn off power before any kind of servicing to avoid electric shock. However, it is not necessary to remove power when hot-swapping SELV ECY IO module front assemblies (see Hot-swappable ECY IO Modules).

Mise En Garde: Risque de décharge électrique: Débrancher l'alimentation avant de réaliser tout raccordement électrique afin d'éviter tout risque de décharge électrique. Cependant, il n'est pas nécessaire de débrancher l'alimentation pour échanger les façades des modules ECY IO TBTS à chaud (voir Hot-swappable ECY IO Modules).

- ☐ All wiring must comply with electrical wiring diagrams as well as national and local electrical codes.
- ☐ To connect the wiring to a device, use the terminal connectors. Use a small flat screwdriver to tighten the terminal connector screws once the wires have been inserted (strip length: 0.25'' (6 mm), maximum tightening torque 0,4 Nm (3.45 in-lb)).
- ☐ Comply with all network and power supply guidelines outlined in the Network Guide.
- ☐ Always use unshielded cabling with a minimum Category 5e (CAT5e) cable for ethernet communications.
- ☐ Keep wiring separate according to their function and purpose to avoid any ambient noise transmission to other wires. Use strapping to keep these wires separated. For example, keep power, hazardous voltage, SELV, PELV, network, and input wiring separate from each other.
- ☐ APEX power wiring: When connecting one wire to a controller's terminal block clamping cage (pole), the wire must be between 18 and 14 gauge (0.82 and 2.1mm$^2$ cross-sectional area). When connecting two wires to a controller's terminal block clamping cage, both wires must be the same thickness, must be between 18 and 16 gauge (0.82 and 1.3mm$^2$ cross-sectional area), and must be the same type (solid or stranded). Twist the wires together and insert then into the controller's terminal block clamping cage. For any other wiring combination (mixed wire thickness, mixed solid and stranded conductors, more than three wires, wire thickness is out of range), twist the wires together and use a wire nut and a pig tail to connect to the controller's terminal block connector as show below.

- IO terminal wiring: When connecting one wire to a controller's terminal block clamping cage (pole), the wire must be between 22 and 16 gauge (0.33 and 1.3mm$^2$ cross-sectional area). When connecting two wires to a controller's terminal block clamping cage, both wires must be the same thickness, both wires must be between 22 and 18 gauge (0.33 and 0.82mm$^2$ cross-sectional area), and both wires must be the same type (solid or stranded). Twist the wires together and insert then into the controller's terminal block clamping cage. For any other wiring combination (mixed wire thickness, mixed solid and stranded conductors, more than three wires, wire thickness is out of range), twist the wires together and use a wire nut and a pig tail to connect to the controller's terminal block connector as show below.

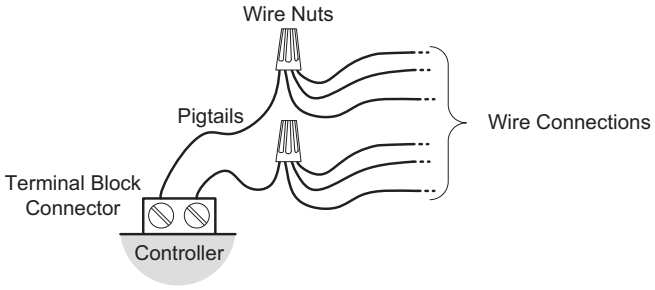


*Figure 1: Using a Wire Nut and Pigtail to Wire the Controller*

- Do not connect the universal inputs, analog/digital outputs or common terminals to earth or chassis ground (unless stated otherwise).
- Keep input and output wiring in conduits, trays or close to the building frame if possible.

# APEX Dimensions

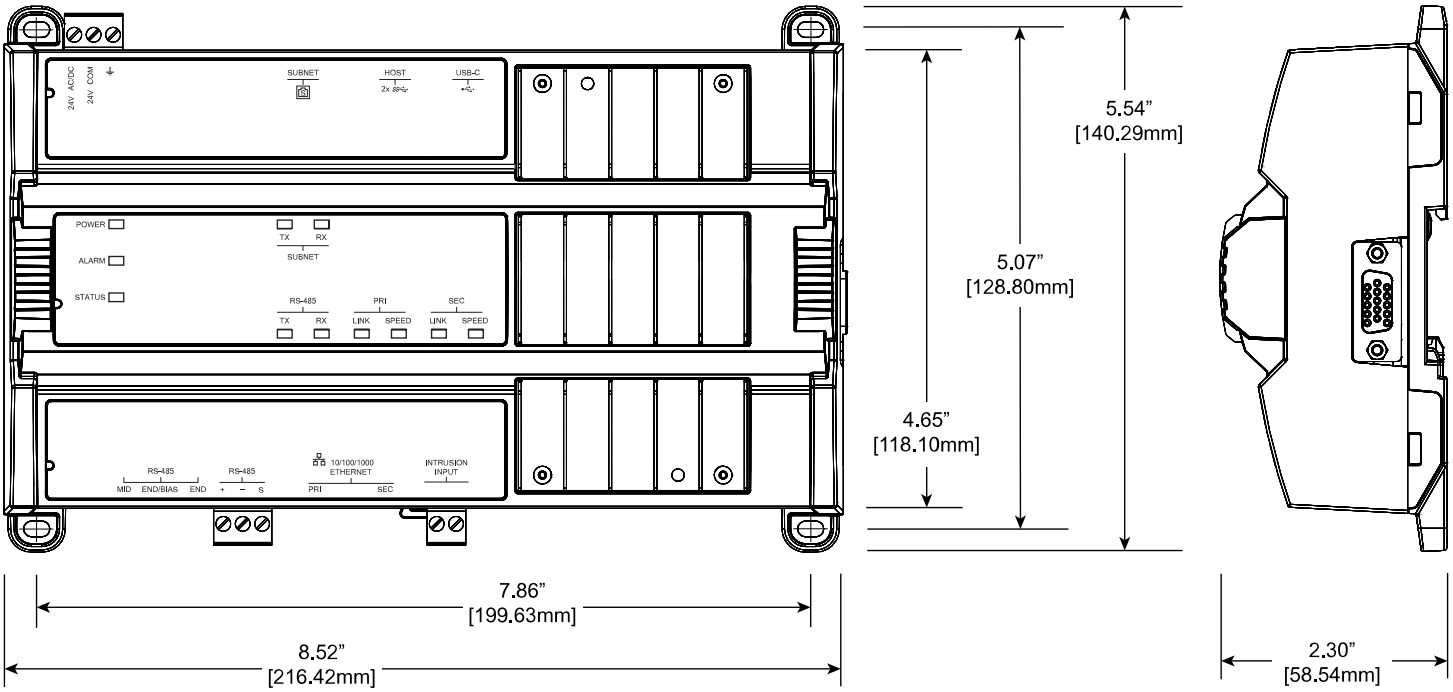


*Figure 2: ECLYPSE APEX dimensions*

# Power Supply Dimensions

The ECLYPSE APEX does not require an external power supply, however, the ECY-PS24 or ECY-PS100-240 module may be required if surpassing the limits of the APEX's integrated power supply. For recommendations according to specific applications, refer to the Product Selection Tool available in Builder: https://builder.distech-controls.com.

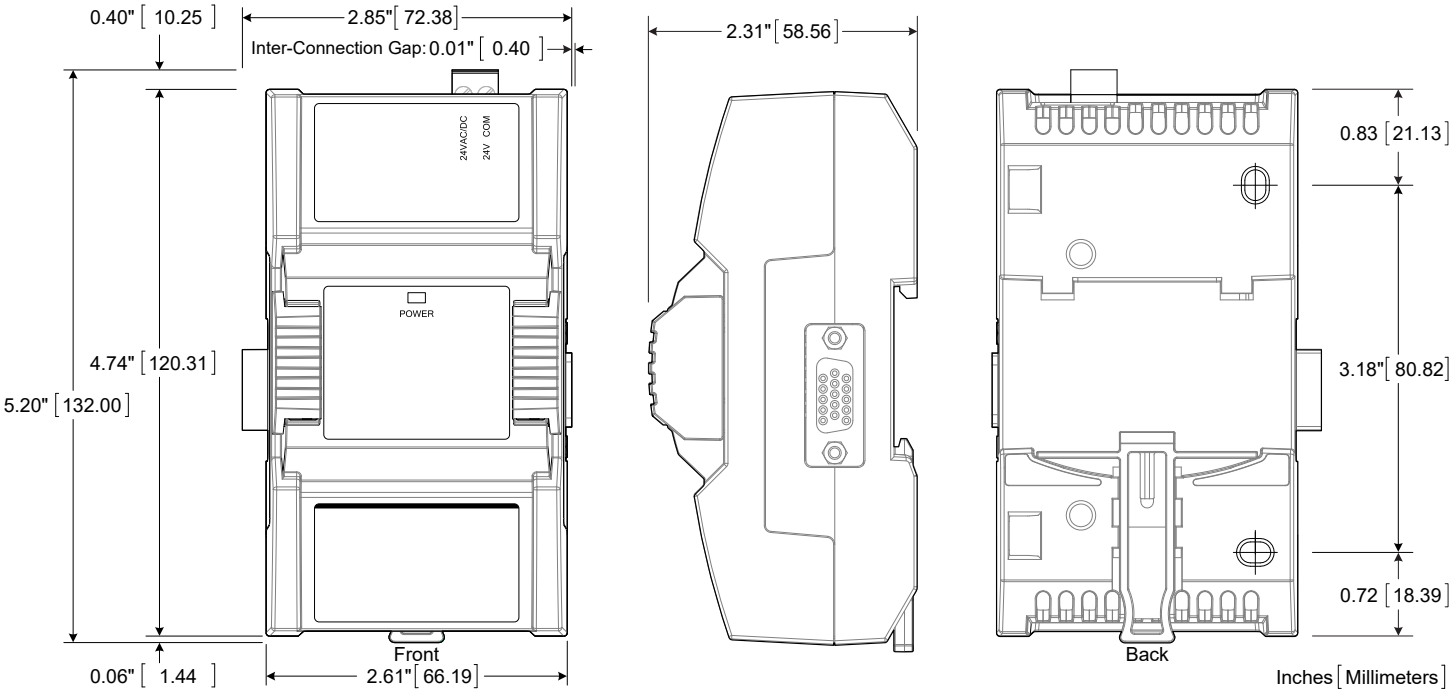


*Figure 3: ECY-PS24 - 24V Power Supply*

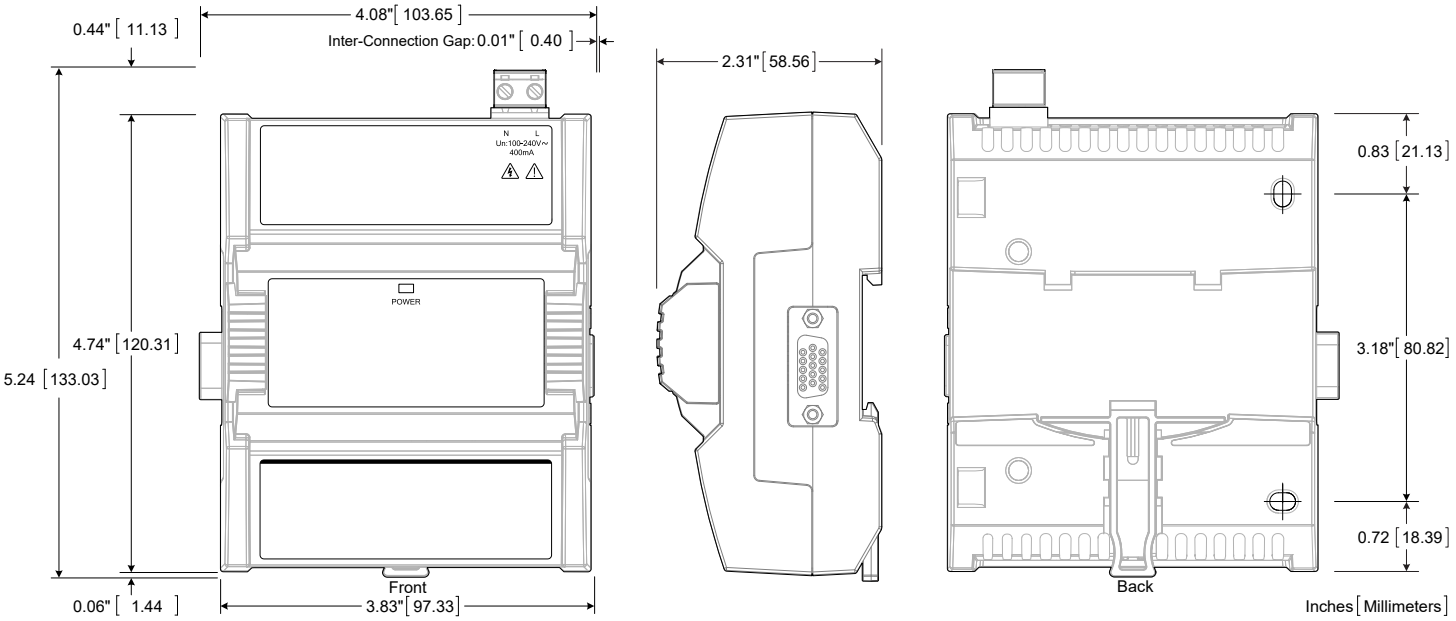


*Figure 4: ECY-PS100-240 - 100 to 240 VAC Power Supply*

# IO Module Enclosure Dimensions

The ECLYPSE APEX supports up to 20 IO Modules. Available IO modules come in the following dimensions.

| |
|---|
| **Narrow models:** ECY-8UI, ECY-16DI, ECY-6UO, ECY-6UO-HOA, ECY-4UI4UO, ECY-4UI4UO-HOA, ECY-8UI6UO, ECY-8UI6UO-HOA, ECY-8UI6DOT, and ECY-8UI6DOT-HOA |
| **Wide models**: ECY-8DOR and ECY-8DOR-HOA. |

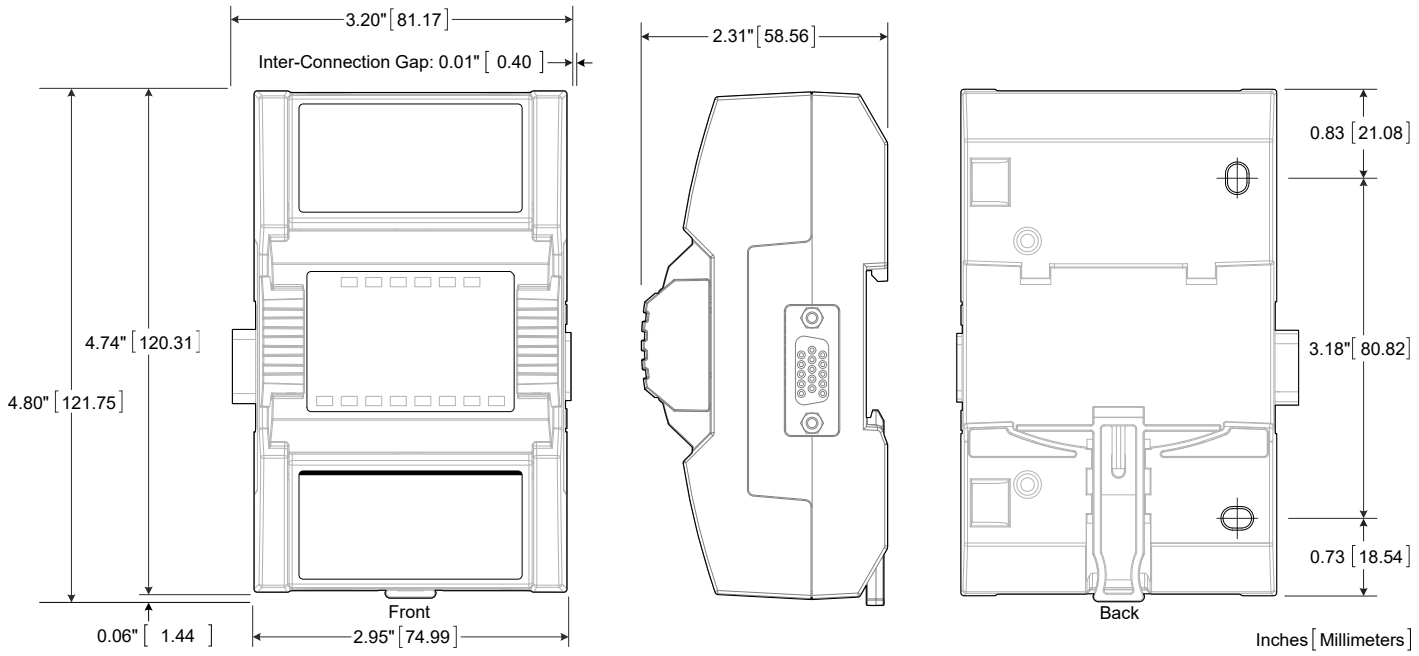


*Figure 5: IO Module: Narrow Width*

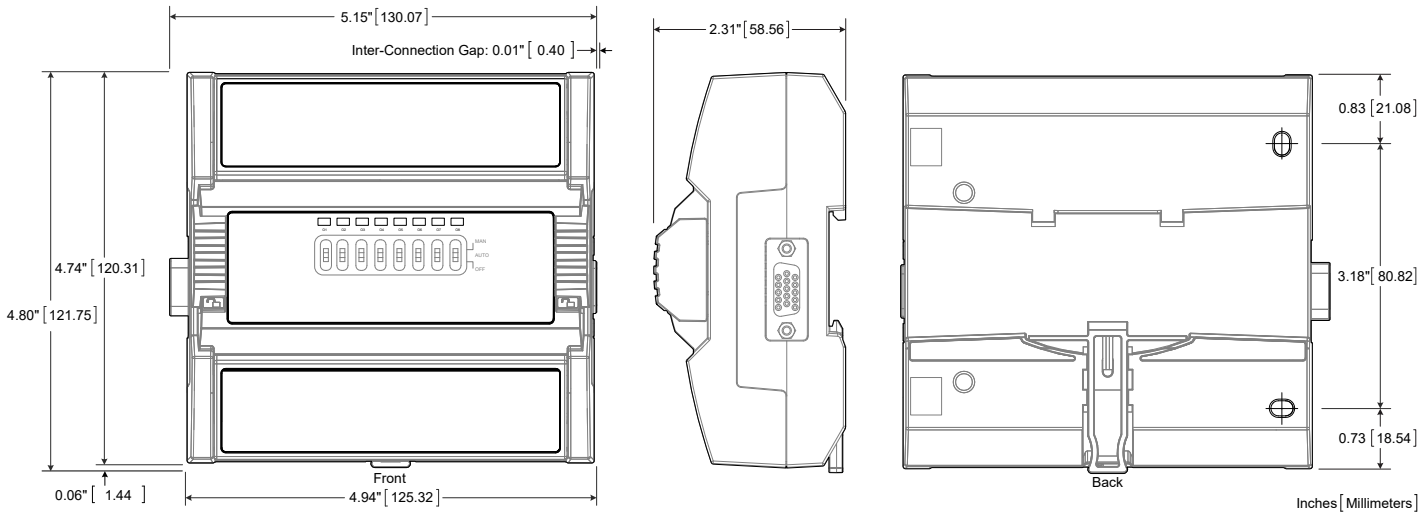


*Figure 6: IO Module: Wide Width*

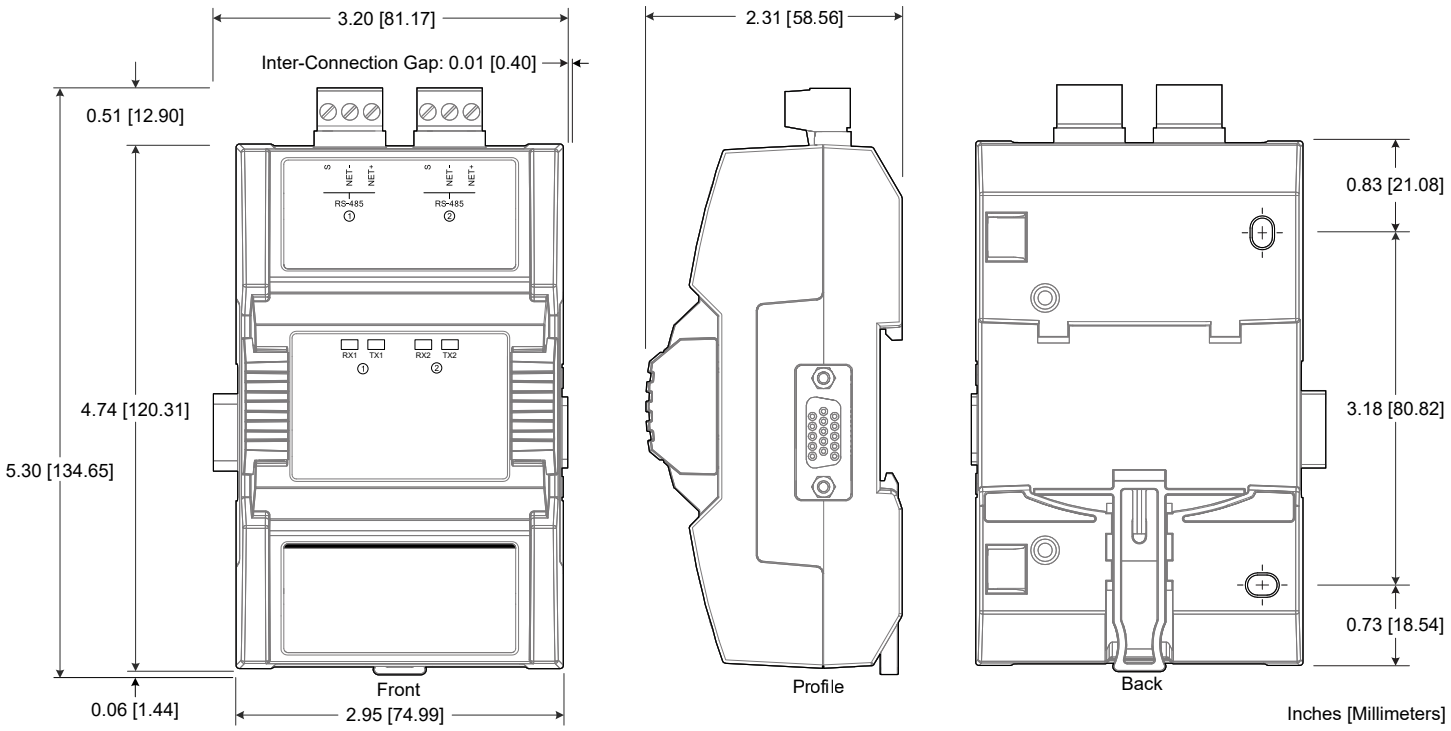


*Figure 7: RS-485 Communication Module*

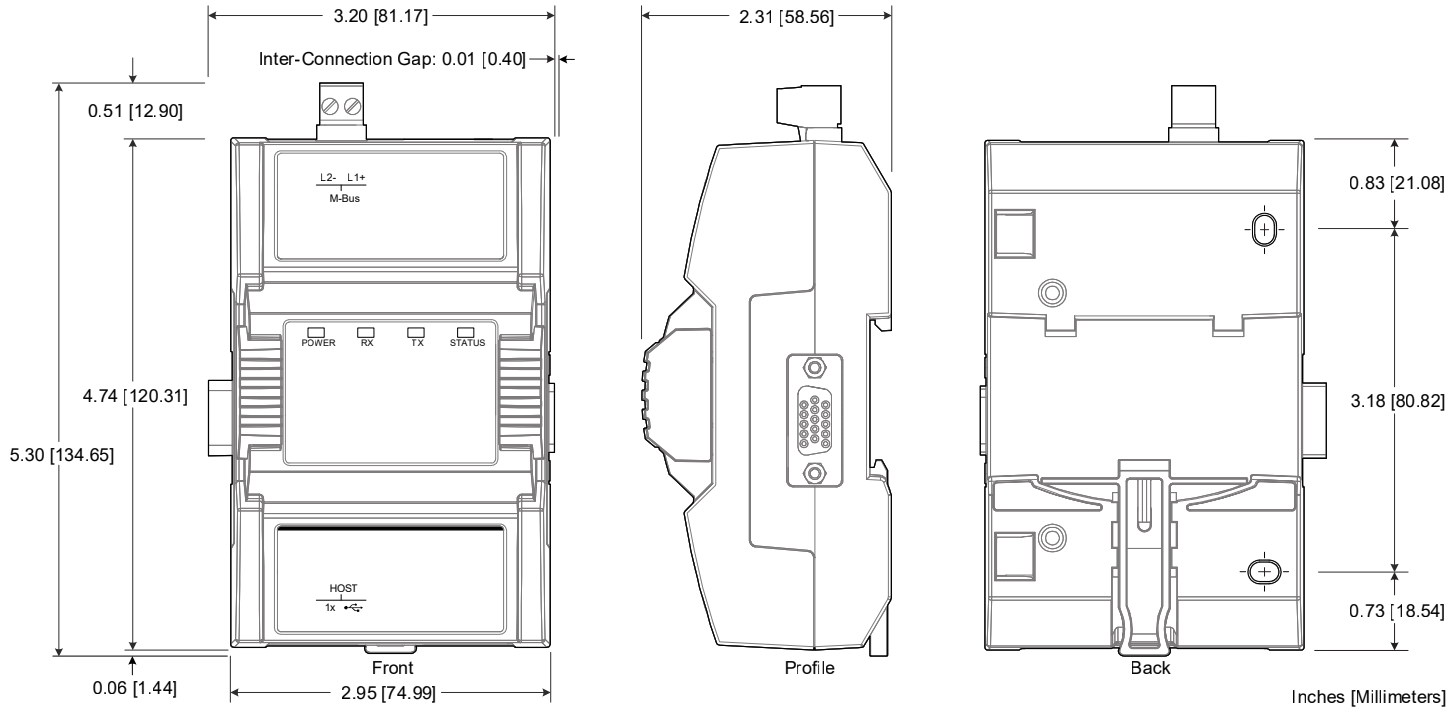


*Figure 8: ECY-MBUS Communication Module*

To determine the width of a specific assembly and assembly order, see the Product Selection Tool in Builder: https://builder.distech-controls.com.

# EOL, DIP Switch, and Jumper Identification and Configuration

## ECLYPSE APEX

The ECLYPSE APEX has an integrated end-of-line (EOL) switch and reset button located at the bottom of the controller as shown in the figure below.

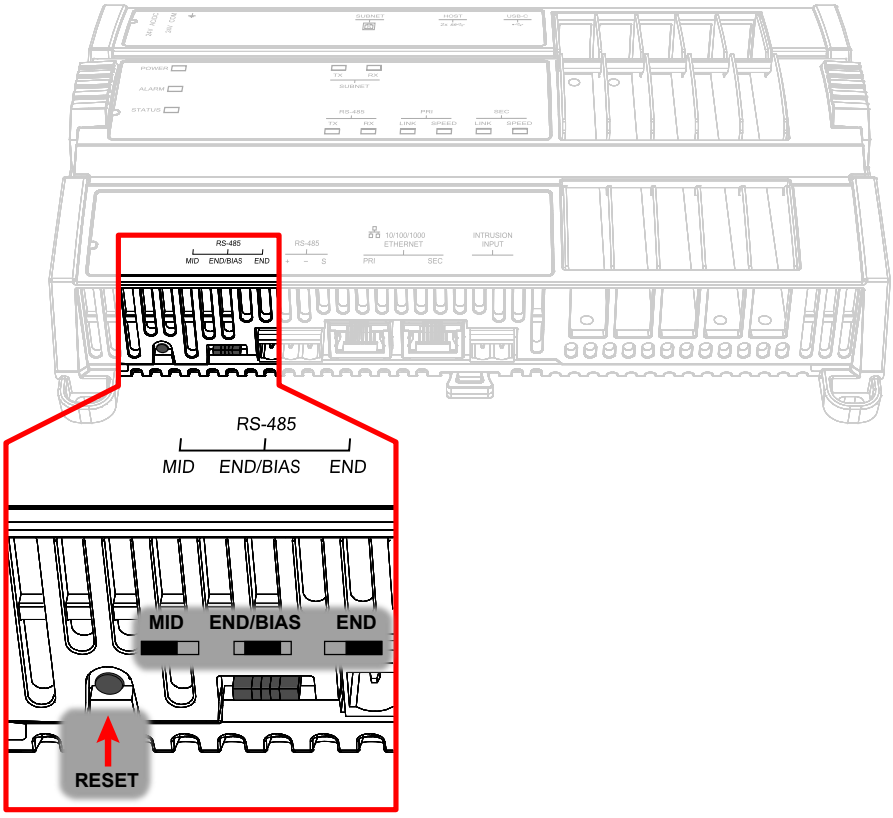


*Figure 9: APEX EOL switch and reset button locations*

## ECY-8UI, ECY-6UO, ECY-6UO-HOA, ECY-4UI4UO, ECY-4UI4UO-HOA, ECY-8UI6UO, ECY-8UI6UO-HOA, ECY-8UI6DOT, and ECY-8UI6DOT-HOA

These IO modules have the following onsite configurable DIP switches located inside the cover. Orient the circuit board as shown in the figure below.

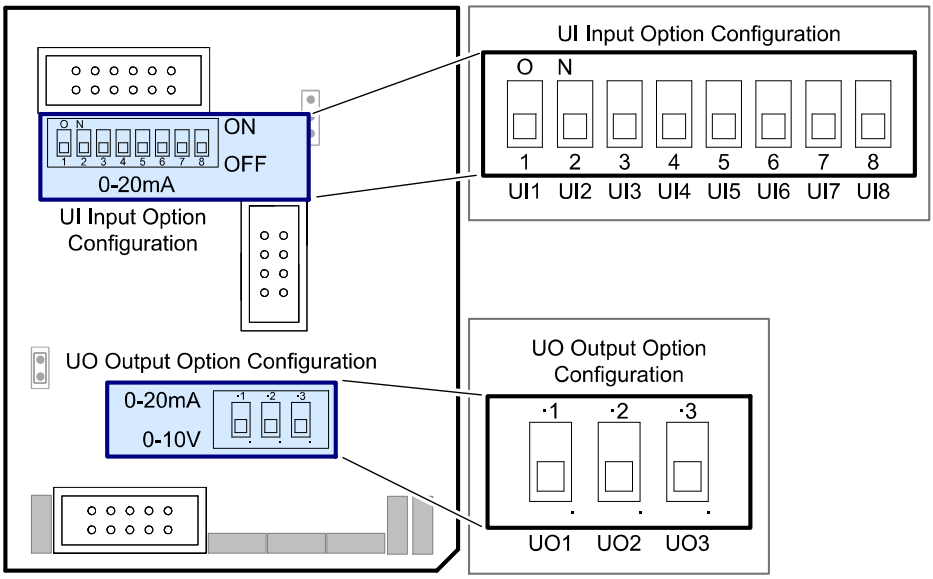


*Figure 10: IO Module DIP Switch Configuration Options*

| Applies to IO Module Models | DIP Switch Position | Input / Output Option Configuration Type | Available Signal Type Options |
|---|---|---|---|
| ECY-8UI, ECY-4UI4UO, ECY-4UI4UO-HOA, ECY-8UI6UO, ECY-8UI6UO-HOA, ECY-8UI6DOT, and ECY-8UI6DOT-HOA |  * | UI Input option configuration | Contact, Counter, 0 to 10VDC, 0 to 5VDC, Resistance, Thermistor |
| ECY-8UI, ECY-6UO, ECY-6UO-HOA, ECY-4UI4UO, ECY-4UI4UO-HOA, ECY-8UI6UO, ECY-8UI6UO-HOA, ECY-8UI6DOT, and ECY-8UI6DOT-HOA |  | UI Input option configuration | 0 to 20mA |
| ECY-6UO, ECY-6UO-HOA, ECY-4UI4UO, ECY-4UI4UO-HOA, ECY-8UI6UO, and ECY-8UI6UO-HOA |  * | UO Output option configuration (UO1, UO2, and UO3) | 0 or 12VDC, PWM, Floating, 0 to 10VDC |
| ECY-6UO, ECY-6UO-HOA, ECY-4UI4UO, ECY-4UI4UO-HOA, ECY-8UI6UO, and ECY-8UI6UO-HOA |  | UO Output option configuration (UO1, UO2, and UO3) | 0 to 20mA |

*Table 1:* IO Module DIP Switch Configuration Options

* Factory-default position

**IO Module Status LED**

The UI1 LED on IO Modules blinks while the module is booting up.

## ECY-RS485

The ECY-RS485 has the following onsite configurable DIP switches located inside on the base. Orient the circuit board as shown in the figure below.

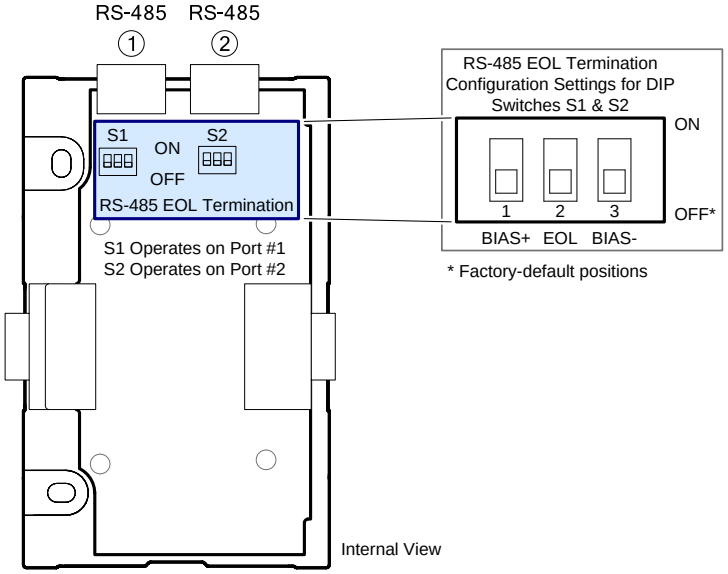


*Figure 11: ECY-RS485 DIP Switch Locations*

# Mounting Instructions

Each controller or module can be mounted on a DIN rail for fast installation and easier maintenance. Each controller or module also has four pre-molded mounting holes allowing the module to be mounted in a panel or on a wall.

Ensure that the mounting surface can support the controller, DIN rail, and any site-supplied enclosure.

The controller must be mounted in a horizontal position as indicated in this guide to ensure proper airflow and heat dissipation. Any other position may cause excess heat accumulation and may result in a damaged controller.

## Mounting Positions

The controller’s mounting orientation must be horizontal with controller’s back attached to a vertical wall surface.

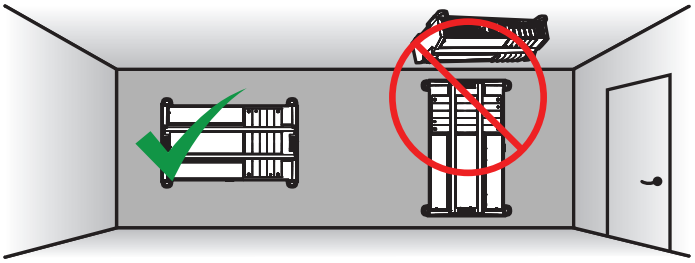

*Figure 12: Permitted Mounting Position*

## IO Module Assembly Order

IO Modules are connected in a left to right order, starting with the ECLYPSE APEX. When an ECY-RS485 is used, install it immediately to the right of the ECLYPSE APEX before any input/output module. This is followed by any mix of up to 20 input/output modules, including ECY Power Supplies as needed to power the input/output modules. To interconnect separate rows of module assemblies, an HD15 cable must be used. An ECY-PS power supply module must be added after each HD15 cable.

The controller's license may have separate limits that reduce the availability of certain options.

The HD15 cable is SELV rated and a safe separation distance must be maintained from any hazardous voltages in order to guarantee insulation between high and low-voltage wiring.

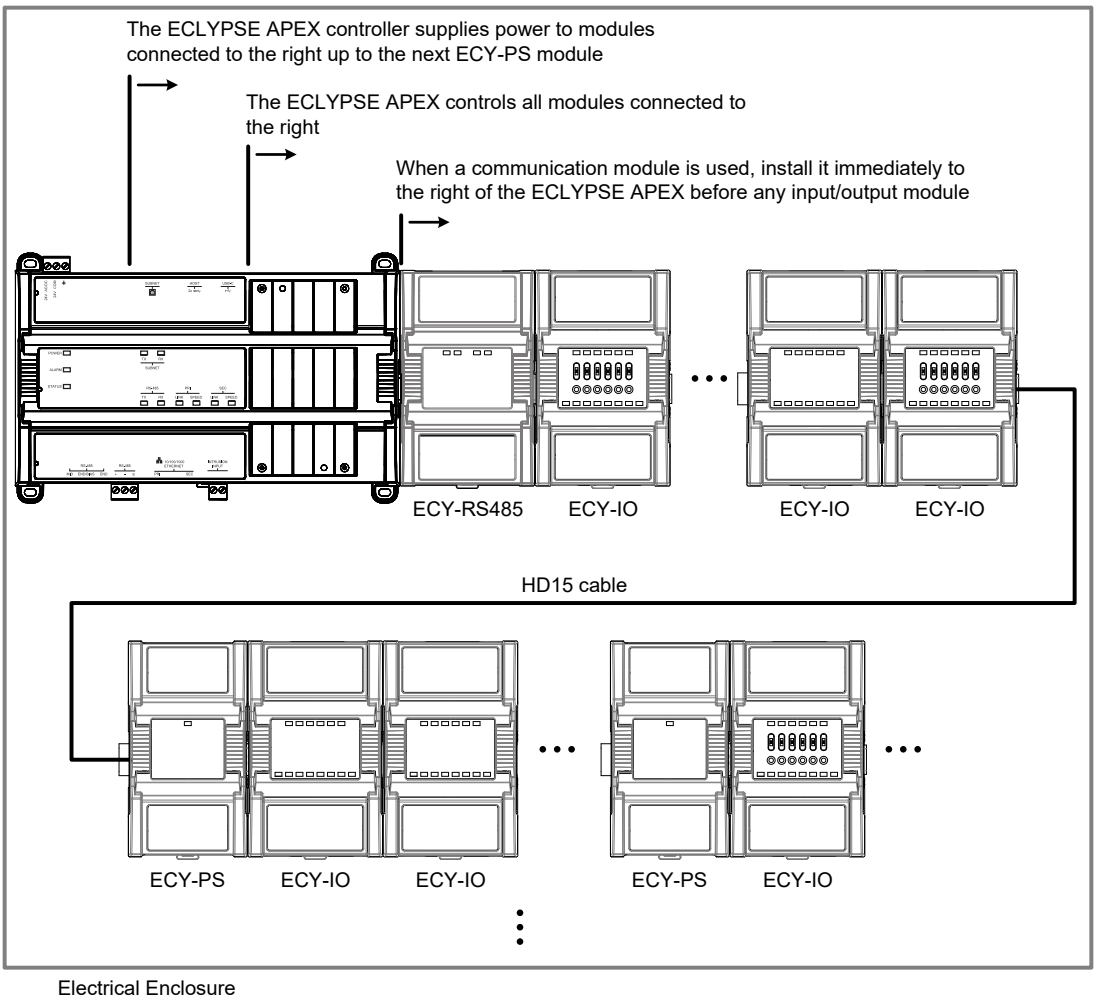


*Figure 13: Assembly Order*

## DIN Rail-Mounted Installation

1. Securely mount the DIN rail horizontally on the wall.
2. Clip the controller onto the DIN rail.

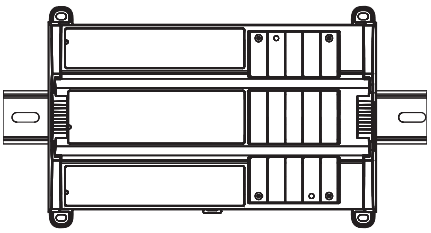

*Figure 14: DIN rail-mounted controller*

3. Slide the modules together so that the side connectors of each module are firmly mated with the adjoining module. Use DIN rail clips to keep the row of modules well secured together and to prevent the movement of any module along the DIN rail. Certain modules come with DIN rail clips in the box.
4. To detach the module from the DIN rail, separate the module from any other module located on either side. Use a flat screwdriver to pull down on the release clip located at the bottom center of the module and pull it off the DIN rail, bottom first.

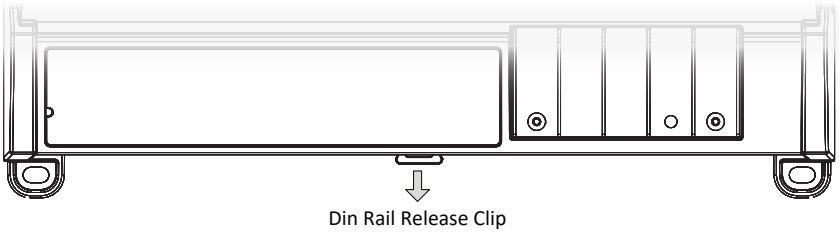


*Figure 15: Typical DIN Rail-Mounting Release Clip*

## Wall-Mounted Installation

Modules should be mounted on a wall one module at a time. The first module of the assembly to be mounted should be the ECLYPSE APEX controller. Once the APEX has been attached to the wall, connect the next module on the right so that the side connectors are firmly coupled and the modules are aligned straight. Now attach this module to the wall. Repeat until all modules are mounted in a row.

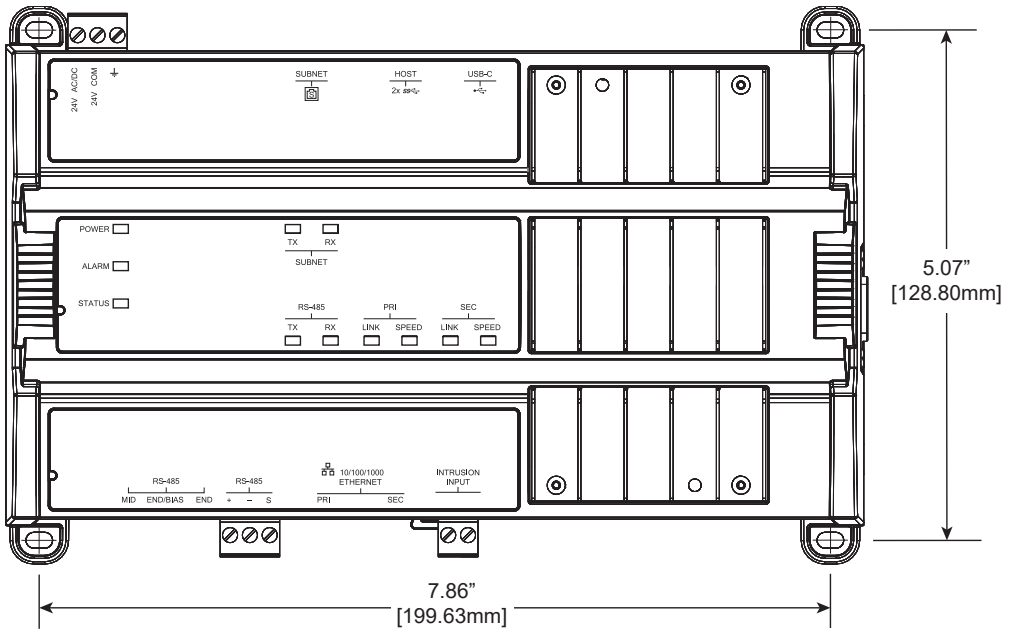


*Figure 16: Mounting Holes ECLYPSE APEX*

1. Use the mounting holes to mark the location of any holes that need to be drilled. Mount the module using a No. 8 slotted hex, size: 1/4" or equivalent mounting hardware appropriate to the wall material type.

2. Before mounting an IO module, separate the front assembly from the back plate of each module to be mounted: push the two latches up to unlock a module's front assembly as shown below.

   ⇨ **For non-ECY IO modules**: Separate the front and back base by gently pulling the front assembly off the back base, thereby separating the electrical connectors between the two halves.

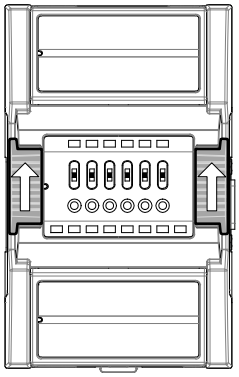

*Figure 17: Latches to Unlock a Module's Front Assembly (ECY HOA Module)*

   ⇨ **For ECY IO modules**: Separate the front and back base by opening and pulling the hinged gull-wing covers, thereby separating the electrical connectors between the two halves.

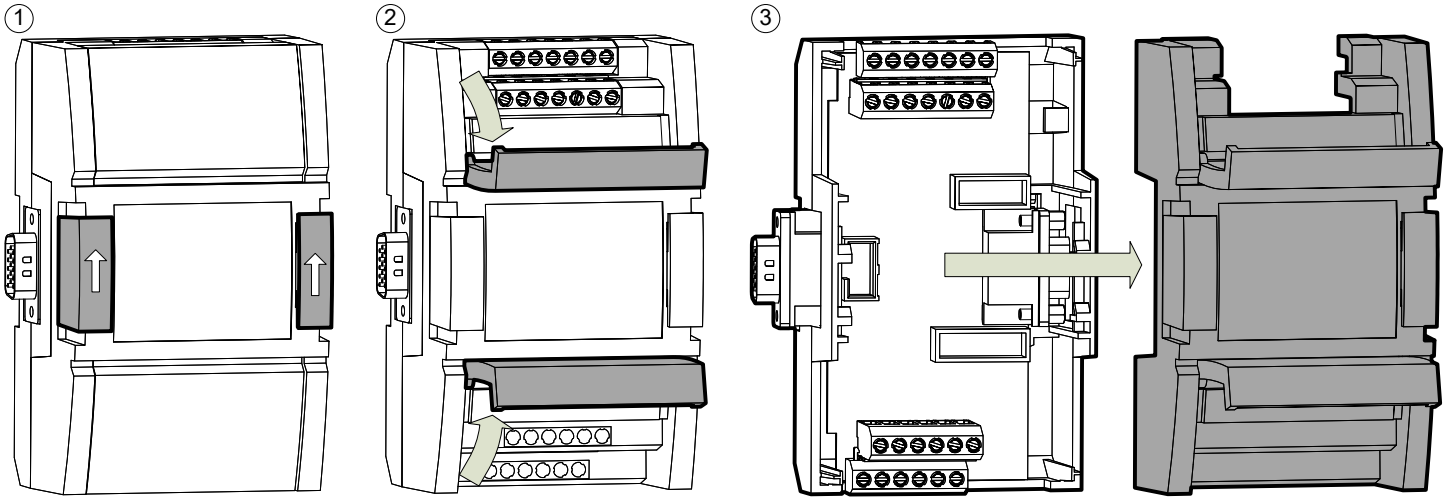


*Figure 18: ECY IO Modules have Gull-wing Front Assembly*

3. Once the front assembly has been removed, use the back-plate's mounting holes to mark the location of any holes that need to be drilled.

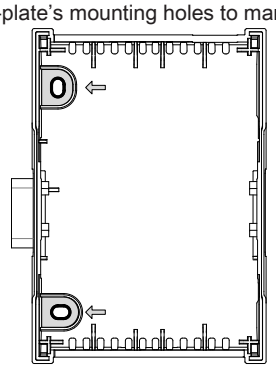

*Figure 19: Typical Mounting Holes*

4. Drill the holes and clean the surface.
5. Mount the module using a No. 8 slotted hex, size: 1/4" or equivalent mounting hardware appropriate to the wall material type.
6. To lock a module's front assembly in place, attach the front assembly to the module's back base by closing any gull-wing front assemblies (if applicable) and pushing the two latches down.

# Power Wiring with APEX

**Voltage**: 24VAC/DC; ± 15%, Class 2

For terminal block connector wiring best practices, see General Wiring Recommendations.

This is a Class 2 Product. Use a Class 2 transformer only (rated 100VA at 24VAC) for each power supply.

A separate transformer rated at 100 VA must be used for each ECLYPSE APEX power supply in order for it to operate correctly. Choose a transformer that can supply both the needs of the APEX power supply (75VA) and any other 24VAC loads such as connected sensors and actuators: add up the maximum power consumption of all 24VAC loads and multiply this sum by 1.3. If the resulting total (75VA plus 1.3 × 24VAC loads) is higher than 100VA, use multiple transformers.

There is a penalty if operating at low input voltage. If, for example, the controller is operating at 20.4VAC (24VAC -15%), the available power is 85VA. The user should keep 15VA of buffer to compensate for voltage variation. This leaves 10VA for other loads on the same transformer.

Use an external fuse on the 24VAC side (secondary side) of the transformer, as shown in the figure below, to protect all modules against power line spikes and mis-wiring.

Each APEX power supply can supply a maximum of 18.8W@18.8V to loads connected to the right of it, up to the next connected power supply, with current limit of 27.3W including the subnet. To calculate the number of Input/Output Extension Modules that can operate with each power supply, the number of power supplies required, and their location, see the Product Selection Tool available in Builder: https://builder.distech-controls.com. The total power consumption of all modules including external 18VDC loads (such as 0 to 20mA current loop inputs) must be 18W@18V or less.

Maintain consistent polarity when connecting controllers and devices to the transformer. One terminal on the secondary side of the transformer must be connected to the building's ground. Ensure that the 24V COM terminals of all power supplies are connected to the grounded transformer secondary connection.

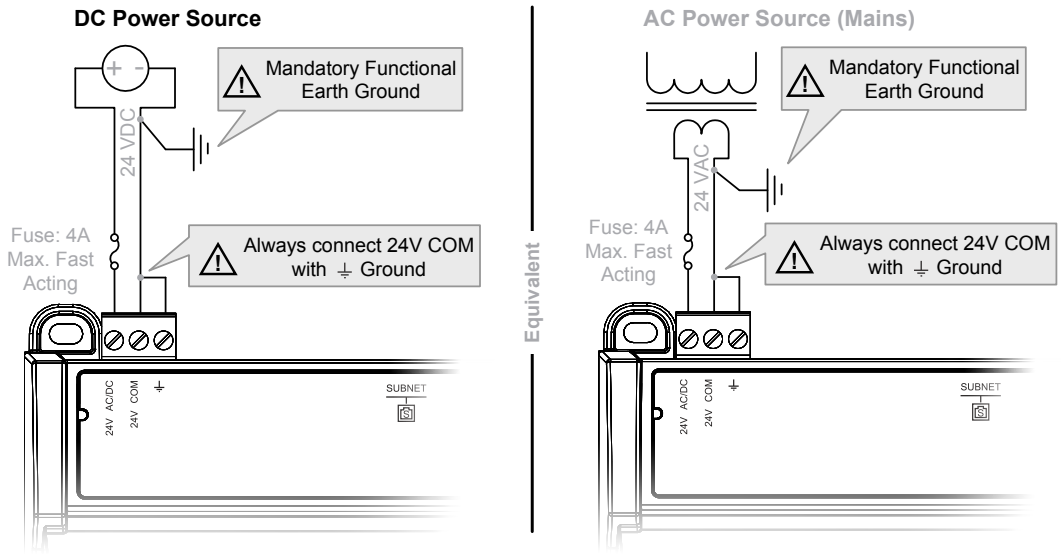


*Figure 20: APEX Power wiring 2-wire*

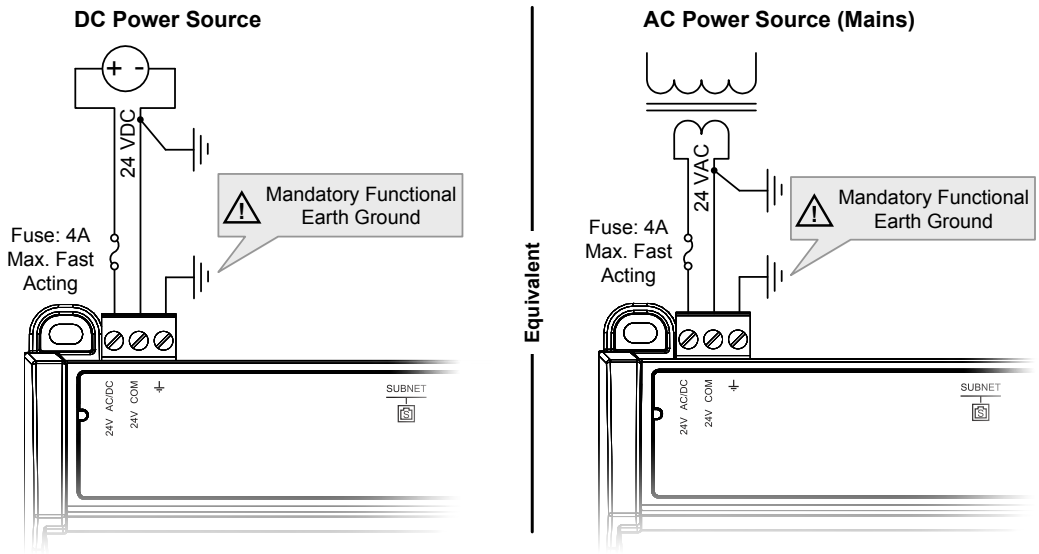


*Figure 21: APEX Power wiring 3-wire*

# Power Wiring with the ECY-PS24

**Voltage**: 24VAC/DC; ± 15%, Class 2

For terminal block connector wiring best practices, see General Wiring Recommendations.

This is a Class 2 Product. Use a Class 2 transformer only (rated between 60 and 100VA at 24VAC) for each ECY-PS24 power supply.

A separate transformer rated at 60 VA minimum must be used for each ECY-PS24 power supply for it to operate at full capacity. Choose a transformer that can supply both the needs of the ECY-PS24 power supply (60VA) and any other 24VAC loads such as connected sensors and actuators: add up the maximum power consumption of all 24VAC loads and multiply this sum by 1.3. If the resulting total (60VA plus 1.3 × 24VAC loads) is higher than 100VA, use multiple transformers.

Use an external fuse on the 24VAC side (secondary side) of the transformer, as shown in the figure below, to protect all modules against power line spikes and mis-wiring.

Each ECY-PS24 power supply can supply a maximum of 30W to loads connected to the right of it, up to the next connected power supply. To calculate the number of Input/Output Extension Modules that can operate with each power supply, the number of power supplies required, and their location, see the Product Selection Tool available in Builder: https://builder.distech-controls.com. The total power consumption of all modules including external 18VDC loads (such as 0 to 20mA current loop inputs) must be 30W or less.

Maintain consistent polarity when connecting controllers and devices to the transformer. One terminal on the secondary side of the transformer must be connected to the building's ground. Ensure that the 24V COM terminals of all power supplies are connected to the grounded transformer secondary connection.

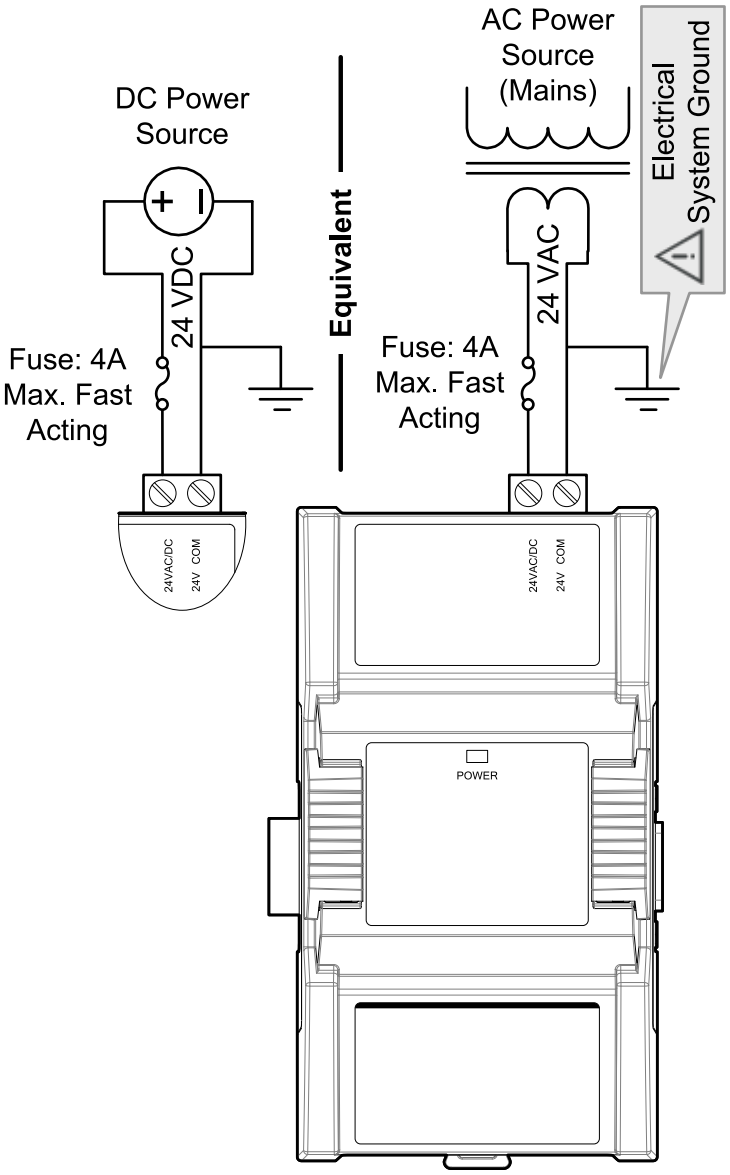


*Figure 22: ECY-PS24 Power wiring*

# Power Wiring with the ECY-PS100-240

| | |
|---|---|
| **Voltage** | 100-240 VAC; +10%/-15%; 50/60 Hz |
| | Overvoltage Category II - 2.5 kV |

For terminal block connector wiring best practices, see General Wiring Recommendations.

Always conform to the wiring regulations in effect in your jurisdiction.

Each ECY-PS100-240 power supply can supply a maximum of 40W to loads connected to the right of it, up to the next connected power supply. To calculate the number of Input/Output Extension Modules that can operate with each power supply, the number of power supplies required, and their location, see the Product Selection Tool available in Builder: https://builder.distech-controls.com. The total power consumption of all modules including external 18VDC loads (such as 0 to 20mA current loop inputs) must be 40W or less.

The ECY-PS100-240 power supply must be connected to the mains using the provided detachable connector.

The power wires must be between 18 AWG (1 mm²) and 16 AWG (1.5 mm²). Use wire with appropriate insulation for this application.

Operating, handling, or servicing this product must be performed by trained personnel only. Turn off power before any kind of servicing.

Risk of electric shock. Do not open. This product has no user-serviceable parts inside. When power has been disconnected, dangerous residual internal voltages may still be present. Return this unit to Distech Controls for maintenance or repair.

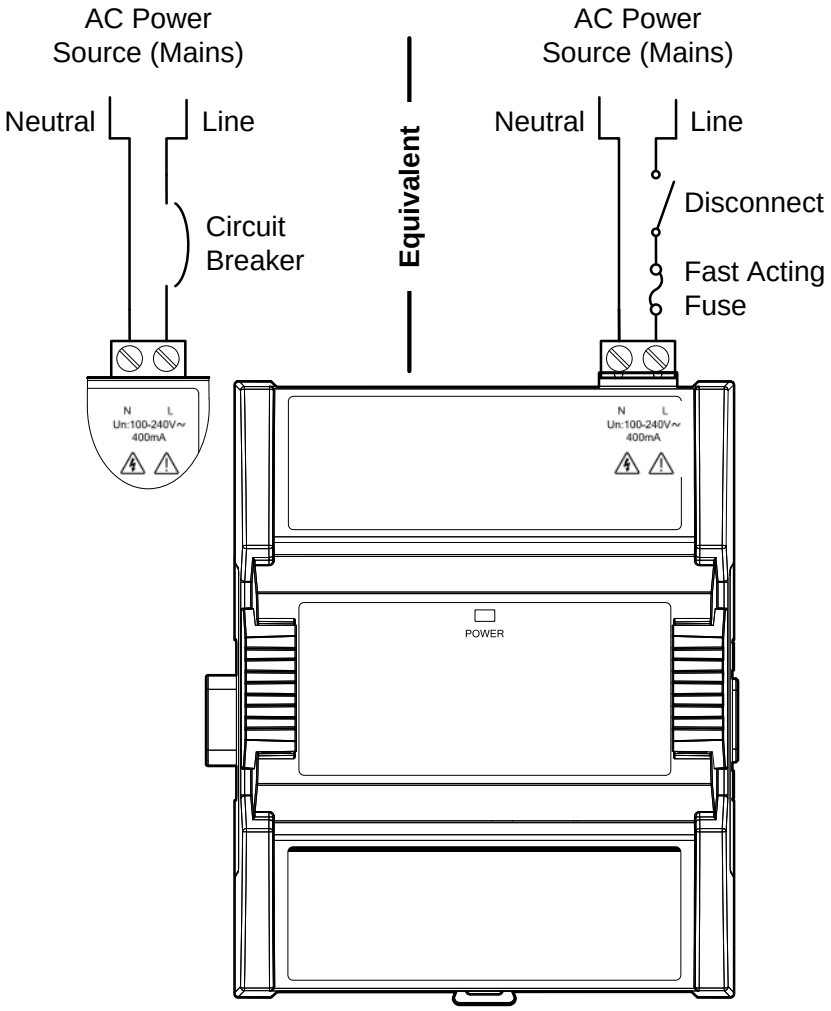


*Figure 23: ECY-PS100-240 Line-To-Neutral Power Wiring*

# Input and Output Overview

Each ECY IO module has a number of physical connections for inputs and/or outputs. These inputs and outputs are labelled on the ECY IO modules according to the tables below. Input and output options must be configured properly in EC-gfxProgram to ensure correct input readings and output values.

The controller's license may have separate limits that reduce the availability of certain options.

## ECY IO Modules

| | Inputs | | | | | | | | | | Outputs | | | | | | | | | | | |
|---|---|---|---|---|---|---|---|---|---|---|---|---|---|---|---|---|---|---|---|---|---|---|
| | | Digital | | | Analog | | | | | | | Digital | | | | | Analog | | | | | |
| | Quantity | Contact | Counter | 120Hz Pulse Counting | 0 to 10VDC | 0 to 5VDC | 0 to 20mA[1] | Resistance | Thermistor | 18VDC Power Supply | Quantity | 0-277VAC / 0-30 VDC Form-C, 10A | 24VAC Triac | 0 or 12VDC | PWM | Floating | 0 to 10VDC[2] | 0 to 20mA[2] | HOA | Narrow width | Wide width | DIP Switch to Configure I/Os |
| ECY-8UI | 8 | UIx | UIx | | UIx | UIx | UIx | UIx | UIx | ■ | | | | | | | | | | ■ | | |
| ECY-16DI | 16 | DIx | DIx | DIx | | | | | | | | | | | | | | | | ■ | | |
| ECY-6UO | | | | | | | | | | | 6 | | | UOx | UOx | UOx | UOx | UO1<br>UO2<br>UO3 | | ■ | | ■ |
| ECY-6UO-HOA | | | | | | | | | | | 6 | | | UOx | UOx | UOx | UOx | UO1<br>UO2<br>UO3 | ■ | ■ | | ■ |
| ECY-8DOR | | | | | | | | | | | 8 | DOx | | | | | | | | | ■ | |
| ECY-8DOR-HOA | | | | | | | | | | | 8 | DOx | | | | | | | ■ | | ■ | |
| ECY-4UI4UO | 4 | UIx | UIx | | UIx | UIx | UIx | UIx | UIx | ■ | 4 | | | UOx | UOx | UOx | UOx | UO1<br>UO2<br>UO3 | | ■ | | ■ |
| ECY-4UI4UO-HOA | 4 | UIx | UIx | | UIx | UIx | UIx | UIx | UIx | ■ | 4 | | | UOx | UOx | UOx | UOx | UO1<br>UO2<br>UO3 | ■ | ■ | | ■ |
| ECY-8UI6UO | 8 | UIx | UIx | | UIx | UIx | UIx | UIx | UIx | ■ | 6 | | | UOx | UOx | UOx | UOx | UO1<br>UO2<br>UO3 | | ■ | | ■ |
| ECY-8UI6UO-HOA | 8 | UIx | UIx | | UIx | UIx | UIx | UIx | UIx | ■ | 6 | | | UOx | UOx | UOx | UOx | UO1<br>UO2<br>UO3 | ■ | ■ | | ■ |
| ECY-8UI6DOT | 8 | UIx | UIx | | UIx | UIx | UIx | UIx | UIx | ■ | 6 | | ■ | | DOx | DOx | | | | ■ | | ■ |
| ECY-8UI6DOT-HOA | 8 | UIx | UIx | | UIx | UIx | UIx | UIx | UIx | ■ | 6 | | ■ | | DOx | DOx | | | ■ | ■ | | ■ |

1. An on-board 18VDC power supply can provide the necessary power for 20mA current loop sensor operation. The 0 to 20mA current loop input option is individually selected through an on-board DIP switch setting.
2. 0 to 10VDC is available on UO1 to UO6. 0 to 20 mA is available on UO1, UO2, and UO3; this option is individually selected through an on-board DIP switch setting.

# Input Wiring

Input options must be properly configured in EC-*gfx*Program to ensure correct input readings. The table below shows the ECY IO modules' input designation for each IO model. For terminal block connector wiring best practices, see General Wiring Recommendations [pg. 2]. Inputs can be connected as follows.

Before connecting a sensor to the controller, refer to the installation guide of the equipment manufacturer.

- ☐ For a wire length less than 99' (30m) long, either a shielded or unshielded 18AWG wire may be used.
- ☐ For a wire length from 99' (30m) up to 200' (61m), a shielded 18AWG wire must be used.
- ☐ The shield of the wire should be grounded on both ends (on the end of the controller and the peripheral), and the shield length should be kept as short as possible.

| Sensor Input Type | ECY IO modules' Input Designation | Input Connection Diagram |
|---|---|---|
| ☐ Dry Contact input.<br>☐ Pulsed input. | ☐ UIx<br>☐ DIx | 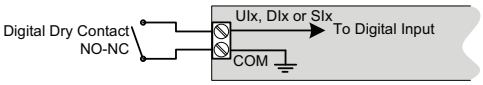 |
| ☐ Pulse input used with a 2-wire sensor powered by its own power source – this input supports a maximum input frequency of 1Hz (500ms minimum ON/OFF). Connect the pulse input according to the figure for a pulse meter that can pull-down a +5VDC supply with a 10KΩ pull-up resistor (Internal supply type). | ☐ UIx | 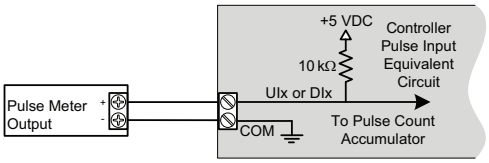 |
| ☐ Pulse input used with a 2-wire sensor powered by its own power source – this input supports a maximum input frequency of 120Hz (4.137ms minimum ON/OFF). Connect the pulse input according to the figure for a pulse meter that can pull-down a +5VDC supply with a 10KΩ pull-up resistor (Internal supply type). | ☐ DIx | |
| ☐ RTD input (for example, 1000Ω).<br>☐ Thermistor Input (for example, 10kΩ type II and III). | ☐ UIx | 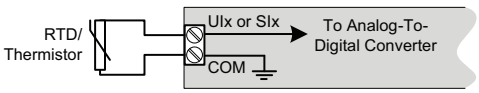 |
| ☐ Resistive input, maximum 350kΩ (for example, use with 10kΩ and 100kΩ potentiometers). | ☐ UIx | 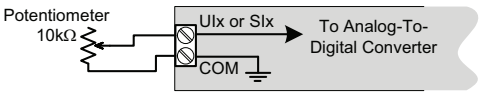 |
| ☐ 0 to 20mA input used with a 2-wire, 0 to 20mA sensor powered by the controller's internal 18VDC power supply.<br>☐ See DIP Switch and Jumper Identification and Configuration on page 5 for more information about how to set the DIP Switch. | ☐ UIx | 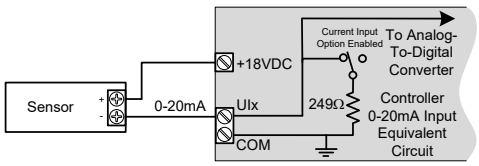 |
| ☐ 0 to 20mA input used with a 2-wire, 0 to 20mA sensor powered by an external 24 AC/DC power supply.<br>☐ See DIP Switch and Jumper Identification and Configuration on page 5 for more information about how to set the DIP Switch. | ☐ UIx | 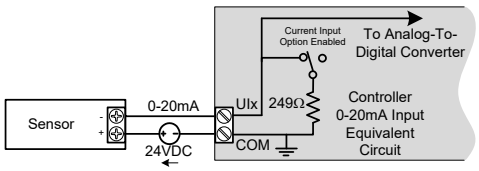 |
| ☐ 0 to 20mA input used with a 3-wire, 0 to 20mA sensor powered by an external 24 AC/DC power supply.<br>☐ See DIP Switch and Jumper Identification and Configuration on page 5 for more information about how to set the DIP Switch. | ☐ UIx | 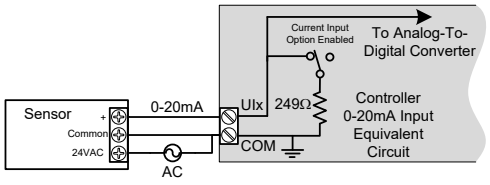 |
| ☐ 0 to 20mA input used with a sensor powered by its own power source.<br>☐ See DIP Switch and Jumper Identification and Configuration on page 5 for more information about how to set the DIP Switch. | ☐ UIx | 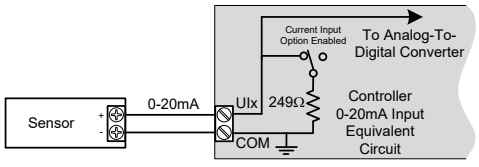 |

| Sensor Input Type | ECY IO modules' Input Designation | Input Connection Diagram |
|---|---|---|
| ☐ Voltage input used with a 3-wire 0 to 10VDC or 0 to 5VDC sensor powered by an external 24 AC/DC power supply. | ☐ UIx | 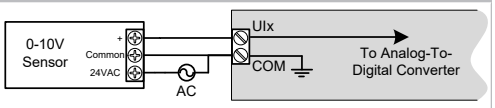 |
| ☐ Voltage input used with a 0 to 10VDC or 0 to 5VDC sensor powered by its own power source. | ☐ UIx | 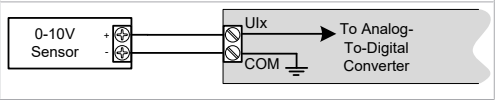 |

*Table 2:* ECY IO Module Input Wiring

# Output Wiring

Output options must be properly configured in EC-*gfx*Program to ensure correct output values. The table below shows the ECY IO modules' output designation for each IO model. For terminal block connector wiring best practices, see General Wiring Recommendations [pg. 2]. Outputs can be connected as follows.

Before connecting an output device (actuator, relay, etc.) to the controller, refer to the datasheet and installation guide of the equipment manufacturer.

- ☐ For a wire length less than 99' (30m) long, either a shielded or unshielded 18AWG wire may be used.
- ☐ For a wire length from 99' (30m) up to 200' (61m), a shielded 18AWG wire must be used.
- ☐ The shield of the wire should be grounded on both ends (on the end of the controller and the peripheral), and the shield length should be kept as short as possible.
- ☐ For relay outputs (DOx), select appropriately-sized wiring suitable to the current load.

| Control Output Type | ECY IO modules' Output Designation | Output Connection Diagram |
|---|---|---|
| ☐ Discrete 0 or 12VDC digital, Pulse, or PWM output controlling a 12VDC relay. Maximum 60 mA (minimum load resistance 200Ω). | ☐ UOx | 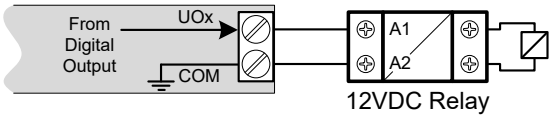 |
| ☐ 0 to 20mA current output – set the DIP switch to 0-20mA.<br>☐ See DIP Switch and Jumper Identification and Configuration on page 5 for more information about how to set the DIP Switch. | ☐ UOx | 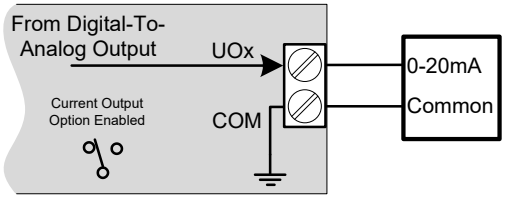 |
| ☐ 0 to 10VDC voltage output. | ☐ UOx | 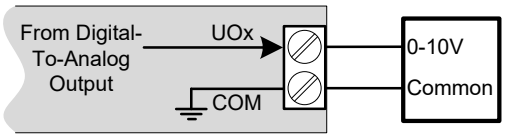 |
| ☐ 0 to 10VDC voltage output controlling an analog actuator that is powered by an external 24VAC power source. | ☐ UOx | 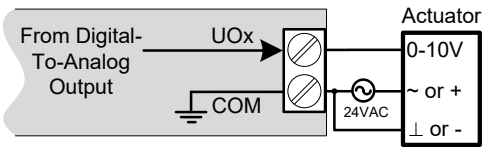 |
| ☐ 24VAC externally-powered triac output controlling a relay[1]. | ☐ DOx (DOT model) | 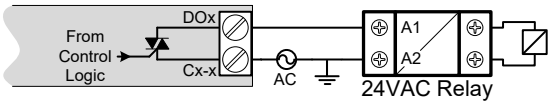 |
| ☐ 24VAC externally-powered triac output controlling a floating actuator[1]. | ☐ DOx (DOT model) | 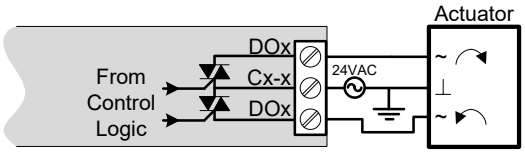 |

1. Maximum output current for all digital triac outputs is 0.5A continuous or 1A @ 15% duty cycle for a 10-minute period.

| Control Output Type | ECY IO modules' Output Designation | Output Connection Diagram |
|---|---|---|
| ☐ Line voltage powered form-C relay output, 0-277VAC / 0-30 VDC, 10A maximum. For example, 120/240VAC controlling a 3 phase motor contactor.<br>☐ The line voltage must to be protected by a 10A Circuit breaker to protect the relay contact output against short circuit/overload conditions.<br>☐ A single 10 amp circuit breaker can be used to protect two or more relay outputs if all connected loads are on the same phase and the total maximum current to all loads is less than 10A.<br><br>SELV circuit cannot be used on a relay output next to another relay output used with Hazardous voltages (120-240VAC for example).<br><br>A Line-to-Line power source can be used only if the maximum Line-to-Neutral Voltage is less than 120VAC. | ☐ DOx (DOR model) | 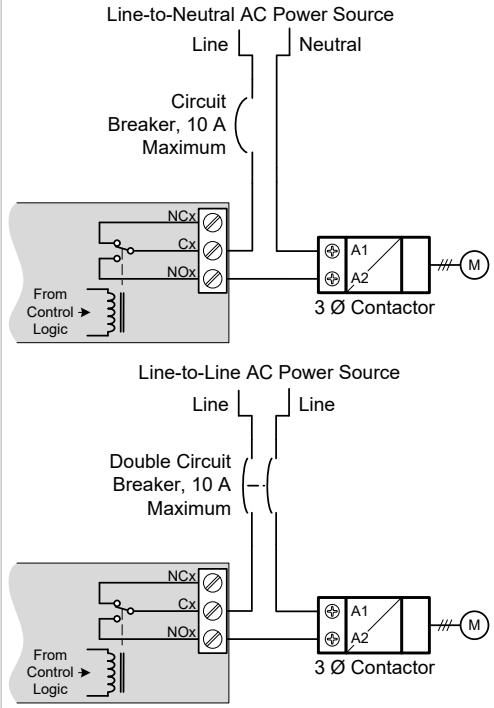 |

*Table 3:* ECY IO Module Output Wiring

# Communications Wiring

The ECLYPSE User Guide provides extensive information and requirements to implement a BACnet IP network. It contains information about network topology, wire length restrictions, cable type, device IP addressing, radio path planning (when the ECLYPSE Wi-Fi Adapter is connected to the controller), etc. It can be downloaded from our website. For optimal performance, use Distech Controls category 5e network cable or refer to the ECLYPSE User Guide for cable specifications.

Controllers are uniquely identified on the network by their MAC address. This identifier is printed on a label located on the side of the controller and on its shipping box. Get a printed copy of the building's floor plan. During controller installation, peel the MAC address stickers off of the shipping box and put it on the floor plan where the controller has been installed. This MAC address is used as part of the controller's factory-default Wi-Fi access point name and its network hostname.

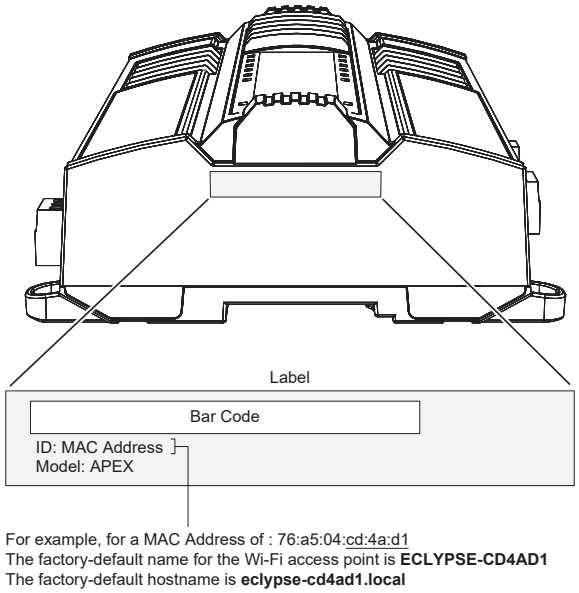


*Figure 24: Finding the Controller's MAC Address*

There are two methods to connect to the controller: wired (Ethernet connection) or wireless (when the ECLYPSE Wi-Fi Adapter is connected to the controller).

## Wired Connection

Network connections can be daisy-chained.

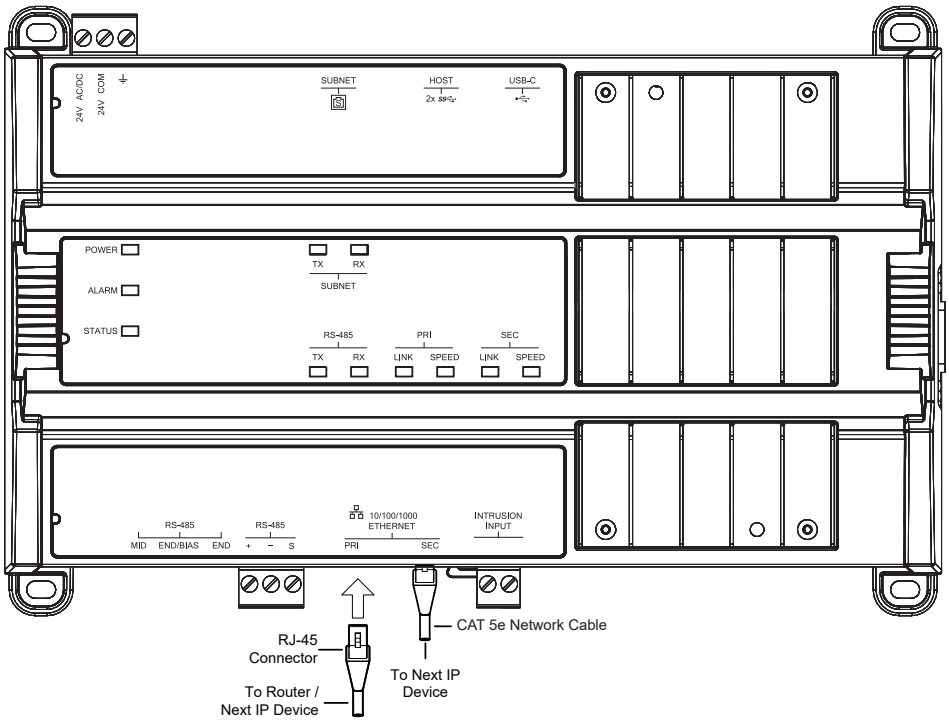


*Figure 25: Communications Wiring*

# Wireless Connection

Once the ECLYPSE Wi-Fi Adapter has been connected to the controller, a Wi-Fi hotspot becomes available that allows you to connect to the controller's configuration Web interface with your PC.

On your PC's wireless networks, look for an access point named **ECLYPSE-XXYYZZ** where **XXYYZZ** are the last 6 hexadecimal characters of the controller's MAC address (see above). The default password for the wireless network is: **eclypse1234**

# Configuring the Controller

Any of the following methods can be used to connect to the controller's interface in order to configure it:

- ☐ Using the Xpress*Network* Utility
- ☐ Using the controller's factory-default Hostname in the Web browser
- ☐ Using the controller's IP address in the Web browser

## Using the Xpress*Network* Utility

The Xpress*Network* Utility is a software application that runs on a PC that allows you to discover all ECY Series controllers connected to an IP network's subnetwork or Wi-Fi network and to perform a range of operations on many controllers at once: you can set each controller's Hostname and IP address, launch EC-*gfx*Program to program the controller, or you can access the controller's configuration Web interface. See the Xpress*Network* Utility User Guide for more information.

Xpress*Network* Companion mobile app can be installed on your smartphone and it works with the QR code marked on the controller's faceplate which encodes the controller's MAC address and host ID. By scanning the QR code, the app records this information to which you assign a hostname. Once the QR codes for all controllers have been read in, the app's information is transferred to the Xpress*Network* Utility where it is used to populate the relevant data fields. See the Xpress*Network* Utility User Guide for more information.



*Figure 26: Typical QR Code*

## Using the Controller's Factory-default Hostname in a Web Browser

Controllers have a factory-default hostname that you can use instead of an IP address to connect to it. The hostname can be used in a Web browser's address bar or in the EC-*gfx*Program's **Connect to** screen. When installing the latest version of EC-*gfx*Program and your PC does not have the Bonjour service installed, a link to install the Bonjour service is provided. The Bonjour service must be installed on your PC to allow your PC to discover controllers by their hostname.

If your PC is unable to resolve the controller's hostname, you must connect your PC to the controller through Ethernet or Wi-Fi so that your PC only sees the controller network. For example, in this case, your PC must be disconnected from all other networks such as a corporate network or the Internet. If necessary, temporarily disconnect your PC's network cable from its Ethernet port.

The controller's factory-default hostname is **eclypse-xxxxxx.local** where **xxxxxx** is the last 6 characters of the MAC address printed on a sticker located on the side of the controller. See above.

For example, the sticker on the side of a controller shows that its MAC address is 76:a5:04:cd:4a:d1. Connect to the controller's Web interface as follows:

1. Open your Web browser.
2. In the Web browser's address bar, type **https://eclypse-cd4ad1.local** and click go.
3. Login to the controller. Then set the controller's configuration parameters in the controller's configuration Web interface. See Connecting to the Controller's Configuration Web Interface.

## Using the Controller's IP Address in a Web Browser

Connect to a controller through its IP address as follows:

☐ For a Wi-Fi Network Connection:

1. Open your Web browser.
2. In the Web browser's address bar, type **https://192.168.0.1** (the controller's factory-default wireless hotspot IP address) and click go.
3. Login to the controller. Then set the controller's configuration parameters in the controller's configuration Web interface. See Connecting to the Controller's Configuration Web Interface.

☐ **For an Ethernet Network Connection**: You must know the controller's current IP address (from the DHCP server for example).

1. Open your Web browser.
2. In the Web browser's address bar, enter the controller's IP address and click go.
3. Login to the controller. Then set the controller's configuration parameters in the controller's configuration Web interface. See Connecting to the Controller's Configuration Web Interface.

## Connecting to the Controller's Configuration Web Interface

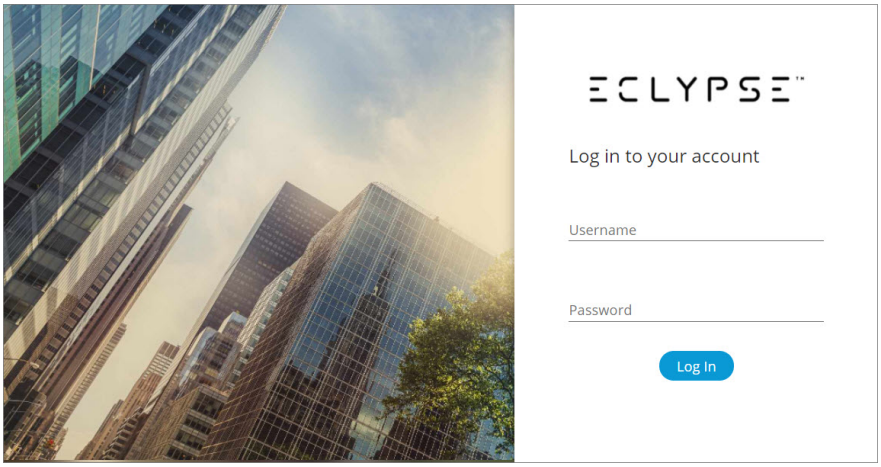


At the first connection to an ECLYPSE Controller you will be forced to change the password to a strong password for the admin account to protect access to the controller.

In Network Settings, configure the controller's network parameters so that they are compatible with your network. See the ECLYPSE User Guide for more information about network settings and how to secure the controller. It is important to create new user accounts with strong passwords to protect the controller from unauthorized access. Remove the factory default admin account as this is a commonly known security breech (only the password for this user account needs to be compromized).

# Subnet Wiring

Supported Allure Series communicating sensors are connected to the **SUBNET** port modular connector of the controller with a standard Category 5e Ethernet patch cable fitted with RJ-45 connectors.

The ECLYPSE User Guide provides extensive information and requirements for the connection of an Allure series communicating sensor. It contains information about network topology and length, cable type, setting the Subnet ID, etc. It can be downloaded from our website. See also the Hardware Installation Guide supplied with the Allure series communicating sensor.

# BACnet MS/TP Communications Wiring

BACnet MS/TP and Modbus RTU communications are made by connecting directly to separate RS-485 ports. The ECLYPSE APEX integrates up to three RS-485 ports when equipped with one ECY-RS485 extension module allowing the controller to support more than one trunk or communication protocol at a time.

The controller's license may have separate limits that reduce the availability of certain options.

The ECLYPSE User Guide provides extensive information and requirements to implement a BACnet MS/TP network. It contains information about network topology, network and sub network wire length restrictions, cable type, device addressing, etc. It can be downloaded from our website. For optimal performance, use Distech Controls 24 AWG (0.65 mm) stranded, twisted pair shielded cable or refer to the ECLYPSE User Guide for cable specification. The BACnet MS/TP communication wire is polarity sensitive and the only acceptable topology is to daisy-chain the cable from one controller to the next. The ECLYPSE User Guide can be downloaded from our website.

As shown in the figure below:

- ☐ The first and last daisy-chained BACnet MS/TP devices must have their EOL resistors enabled / installed. All other devices must have their EOL resistor disabled (default factory setting). See the figure below.
- ☐ The first and/or last daisy-chained BACnet MS/TP devices must have their BIAS enabled. All other devices must have their BIAS disabled (default factory setting). See the figure below. Note that the BIAS settings for BACnet MS/TP controllers that do not have a specific setting to enable / disable BIAS usually means that the BIAS is enabled when the EOL resistors are enabled.
- ☐ When the BACnet MS/TP data bus is connected to a following device, twist data bus shields together.
- ☐ Isolate all shields with electrical tape so there is no exposed metal that can touch ground or other conductors.
- ☐ The shield of the data bus must be connected to the electrical system ground at only one point – usually at one end of the bus as shown below.
- ☐ Connect no more than 50 devices to a BACnet MS/TP data bus.

Use any RS-485 port to connect to a trunk of BACnet MS/TP devices. RS-485 port terminal connectors are labeled such that **NET+** is the same as **+** and **NET-** is the same as **-**. This port must be configured in controller's Web interface prior to use.

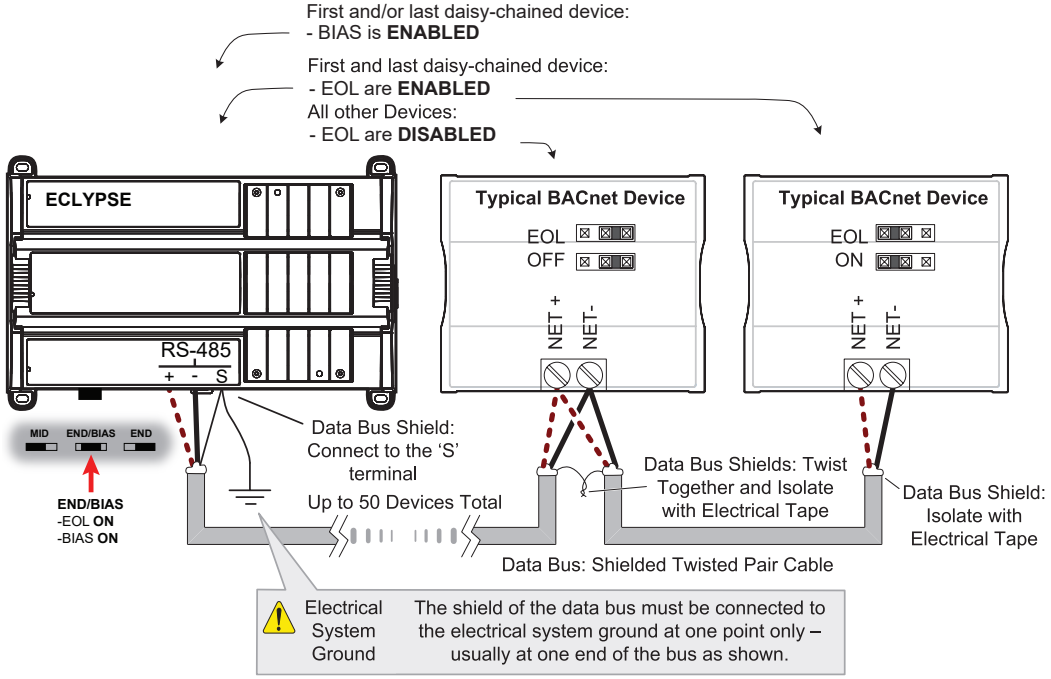


*Figure 27: BACnet MS/TP Communications Wiring*

When inserting multiple wires into a terminal-block connector, ensure to properly twist wires together prior to insertion.

# Modbus RTU Communications Wiring

BACnet MS/TP and Modbus RTU communications are made by connecting directly to separate RS-485 ports. The ECLYPSE APEX integrates up to three RS-485 ports when equipped with one ECY-RS485 extension module allowing the controller to support more than one trunk or communication protocol at a time.

Furthermore, Modbus TCP devices can be integrated by connecting them to the controller's IP network.

The ECLYPSE User Guide provides extensive information and requirements to implement a Modbus RTU network. It contains information about network topology, network and sub network wire length restrictions, cable type, device addressing, etc. It can be downloaded from our website. For optimal performance, use Distech Controls 24 AWG (0.65 mm) stranded, twisted pair shielded cable or refer to the ECLYPSE User Guide for cable specification. The Modbus RTU communication wire is polarity sensitive and the only acceptable topology is to daisy-chain the cable from one controller to the next. The ECLYPSE User Guide can be downloaded from our website.

As shown in the figure below:

- ☐ The first and last daisy-chained Modbus RTU devices must have their EOL resistors enabled / installed. All other devices must have their EOL resistor disabled (default factory setting).
- ☐ The first and/or last daisy-chained Modbus RTU device must have their BIAS enabled. All other devices must have their BIAS disabled (default factory setting). See the figure below. Note that the BIAS settings for Modbus RTU devices that do not have a specific setting to enable / disable BIAS usually means that the BIAS is enabled when the EOL resistors are enabled.
- ☐ When the Modbus RTU data bus is connected to a following device, twist data bus shields together.
- ☐ Isolate all shields with electrical tape so there is no exposed metal that can touch ground or other conductors.
- ☐ The shield of the data bus must be connected to the electrical system ground at only one point – usually at one end of the bus as shown below.
- ☐ Connect no more than 50 devices to a Modbus RTU data bus.

Use any RS-485 port to connect to a trunk of Modbus RTU devices. RS-485 port terminal connectors are labeled such that NET+ is the same as + and NET- is the same as -.

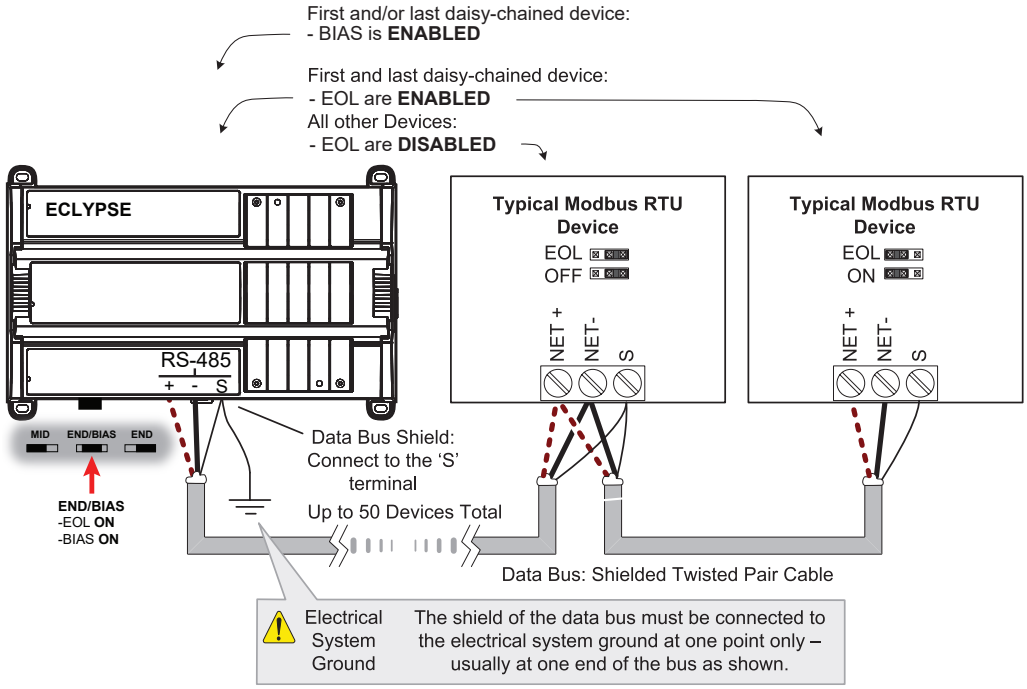


*Figure 28: Modbus RTU Communications Wiring*

If inserting multiple wires in the terminals, ensure to properly twist wires together prior to inserting them into the terminal connectors.

The RS-485 port must be configured in EC-*gfx*Program prior to use. Modbus devices are integrated into EC-*gfx*Program using the EC-*gfx*Program Modbus device block.

# Modbus TCP Communications Wiring

Connect Modbus TCP devices to the same IP subnet the controller is using. This connection can be made by connecting the Modbus TCP device to an Ethernet port on the ECLYPSE APEX with a Cat5e network cable for example (see Wired Connection). For more connection options, refer to the ECLYPSE User Guide.

The RS-485 port must be configured in EC-*gfx*Program prior to use. Modbus devices are integrated into EC-*gfx*Program using the EC-*gfx*Program Modbus device block.

# M-Bus Communications Wiring

M-Bus communications are made by connecting meters directly in an M-Bus port.

The ECLYPSE APEX integrates one M-Bus port when equipped with one ECY-MBUS extension module.

The M-Bus port must be configured in EC-*gfx*Program prior to use. M-Bus meters are integrated into EC-*gfx*Program using the M-Bus device block.

## Maximum M-Bus Device Wiring Length

The following information provides wiring limitations for M-Bus devices. The wiring length provided below was tested as a worst-case scenario with all meters being located at the end of the bus. If meters are more evenly spaced along the bus, then the maximum wiring length can possibly be increased.

Testing Conditions:

| | |
|---|---|
| Current per slave/meter | 1.5 mA |
| Max ΔV accepted on the bus | 2 V |
| Cable capacity | 110 nF/km |

ECY-MBUS extension module connected through the HD15 port:

| M-Bus Meters | AWG 15 | AWG 22 |
|---|---|---|
| | 300, 2400, 9600 Bps | 300, 2400, 9600 Bps |
| 10 | 5000 m (16404 ft) | 1200 m (3937 ft) |
| 20 | 2500 m (8282 ft) | 550 m (1804 ft) |
| 30 | 1500 m (4921 ft) | 350 m (1148 ft) |
| 40 | 1100 m (3608 ft) | 250 m (820 ft) |
| 50 | 850 m (2788 ft) | 200 m (656 ft) |
| 60 | 650 m (2132 ft) | 150 m (492 ft) |

*Table 4:* Maximum wiring lengths from the controller to the last M-Bus meter when the ECY-MBUS extension module is connected through the HD15 port

# Using the Reset Button

See the EOL, DIP Switch, and Jumper Identification and Configuration [pg. 7] for the location of the reset button. Depending on the amount of time the reset button is held down, different actions are taken by the controller. The **STATUS** LED will turn off after each time interval.

| Hold Reset For | To |
|---|---|
| 5 seconds | Restart / reboot the controller. |
| 10 seconds | Reset both Ethernet and Wi-Fi IP addresses back to factory default settings. |
| 20 seconds | Reset the controller to its factory default settings. User accounts (user names and passwords) will also be reset to the factory default settings and the controller license will be cleared.<br>If FIPS has been enabled on the controller, this will turn FIPS off. |



Always backup the controller's license through the controller's Web interface before you hold the controller's reset button for 20 seconds. Once the controller reboots, you will have to install the license through the controller's Web interface.

After you hold the controller's reset button for 20 seconds, the controller's HTTPS security certificates will be regenerated. If you use HTTPS to connect to the controller, you will no longer be able to connect to the controller from any PC that was used in the past to connect to the controller unless you delete the old HTTPS security certificate from these PCs.

# Maintenance



Turn off power before any kind of servicing. However, it is not necessary to remove power when hot-swapping ECY IO module front assemblies (see Hot-swappable ECY IO Modules).

## Regular Maintenance

Each controller requires minimal maintenance, but it is important to take note of the following:

- ☐ Clean the outside of the controller by polishing it with a soft dry cloth.
- ☐ Using a torque limited screw driver set to 0.4 Nm (3.54 in-lb), retighten terminal connector screws annually to ensure the wires remain securely attached.

## Hot-swappable ECY IO Modules

ECY IO module front assemblies are hot-swappable for easy maintenance (see Input and Output Overview). The front assembly of ECY IO modules separate from the base by pushing the two latches up to unlock a module's front assembly and then opening and pulling the hinged gull-wing covers (see Mounting Instructions). Avoid mismatching IO modules by matching the front assembly to the base assembly's model label sticker on the PCB. Install the new front assembly by raising the hinged gull-wing covers and seating the front assembly onto the base. Push down the hinged gull-wing covers and push the two latches down to lock the module's front assembly in place (see the figure below).

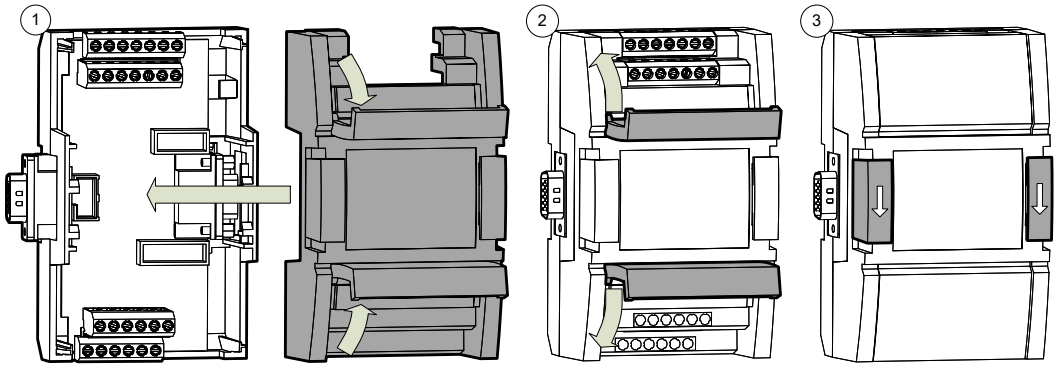


*Figure 29: Installing an ECY IO Module Front assembly*

Risk of Electric Shock: The ECY-8DOR series are hot-swappable when hazardous voltages are not present. Turn off power before any kind of servicing to avoid electric shock. This unit is to be serviced by trained personnel only.

# Disposal

The Waste Electrical and Electronic Equipment (WEEE) Directive sets out regulations for the recycling and disposal of products. The WEEE2002/96/EG Directive applies to standalone products, for example, products that can function entirely on their own and are not a part of another system or piece of equipment.

For this reason Distech Controls products are exempt from the WEEE Directive. Nevertheless, Distech Controls products are marked with the WEEE symbol, indicating devices are not to be thrown away in municipal waste.

Products must be disposed of at the end of their useful life according to local regulations and the WEEE Directive.

# North American Emissions Compliance

**United States**

Changes or modifications not expressly approved by Distech Controls could void the user's authority to operate the equipment.

This equipment has been tested and found to comply with the limits for a Class B digital device, pursuant to Part 15 of the FCC Rules. These limits are designed to provide reasonable protection against harmful interference in a residential and commercial installation. This equipment generates, uses and can radiate radio frequency energy and, if not installed and used in accordance with the instructions, may cause harmful interference to radio communications. However, there is no guarantee that interference will not occur in a particular installation. If this equipment does cause harmful interference to radio or television reception, which can be determined by turning the equipment off and on, the user is encouraged to try to correct the interference by one or more of the following measures:

Reorient or relocate the receiving antenna.

Increase the separation between the equipment and receiver.

Connect the equipment into an outlet on a circuit different from that to which the receiver is connected.

Consult the dealer or an experienced radio/TV technician for help.

**Canada**

This Class (B) digital apparatus meets all the requirements of the Canadian Interference-Causing Equipment Regulations.

Cet appareil numérique de la Classe (B) respecte toutes les exigences du Règlement sur le matériel brouilleur du Canada.

# Complementary Information

The ECY-8DOR, ECY-8DOR-HOA, and PS100-240 modules are designed for type 1 action and type 1.b action. The ECY-8DOR and ECY-8DOR-HOA presents an A class software. The EMC immunity test passed using 230 VAC and 0.5 A. The Ball pressure Test temperature was 167°F (75°C) for the Enclosure and 257°F (125°C) for the Connectors. The SELV must not exceed 42 VDC. The maximum accessible voltage is 19 VDC. All connecting cables must be permanently installed with X-type anchors. All cables must have insulation rated for 176°F (80°C) or higher. These products are classified as integrated electronic operation control devices. SELV is guaranteed by reinforced insulation.



For the PS100-240 module: Risk of electric shock. Do not open. This product has no user-serviceable parts inside. When power has been disconnected, dangerous residual internal voltages may still be present. Return this unit to Distech Controls for maintenance or repair.

Specifications subject to change without notice.
ECLYPSE, Distech Controls, the Distech Controls logo, EC-Net, Allure, and Allure UNITOUCH are trademarks of Distech Controls Inc. BACnet is a registered trademark of ASHRAE; BTL is a registered trademark of the BACnet Manufacturers Association. The Bluetooth® word mark and logos are registered trademarks owned by Bluetooth SIG, Inc. and any use of such marks is under license. All other trademarks are property of their respective owners.
©, Distech Controls Inc., 2021 - 2022 All rights reserved.
Global Head Office - 4205 place de Java, Brossard, QC, Canada, J4Y 0C4 - EU Head Office - ZAC de Sacuny, 558 avenue Marcel Mérieux, 69530 Brignais, France