

SARATOGA SP
SARATOGA II HP

MAINTENANCE MANUAL

PA-32R-301 SARATOGA SP
PA-32R-301 SARATOGA II HP
PA-32R-301T SARATOGA SP

Card 1 of 4

THIS HANDBOOK INCLUDES THE MAINTENANCE INFORMATION REQUIRED TO BE AVAILABLE BY FAR PART 23.

PART NUMBER 761 719

Published by
Technical Publications

Piper Aircraft Corporation
2926 Piper Drive
Vero Beach, Florida 32960
U.S.A.

Copyright 1993 Piper Aircraft Corporation

All rights reserved. No part of this publication may be reproduced, stored in a retrieval system, or transmitted, in any form or by any means, electronic, mechanical, photocopying, recording, or otherwise, without the prior written permission of the Piper Aircraft Corporation, except for the inclusion of brief quotations in a review.

LIST OF EFFECTIVE REVISIONS

Revisions to this Maintenance Manual 761 719 issued Scptembcr 7, 1979 are as follows:

Log of Revisions

Effectivity	Date	Aerofiche Card Effectivity
PR80014	January 14, 1980	1, 2 and 3
PR800820	August 20, 1980	1, 2 and 3
PR810220	February 20, 1981	1, 2 and 3
PR810923	Septembcr 23, 1981	1, 2 and 3
PR820913	Septembcr 13, 1982	1, 2 and 3
PR821230	December 30, 1982	1, 2 and 3
PR830715	July 15, 1983	1, 2 and 3
PR840810	August 10, 1984	1, 2 and 3
PR850815	August 15, 1985	3
IR860430	April 30, 1986 (Interim)	1
IR860730	July 30, 1986 (Interim)	1
IR860920	September 20, 1986 (Interim)*	1

Revisions to this Maintenance Manual 761 719, reissued July 1, 1993, are as follows:

LIST OF EFFECTIVE REVISIONS

Log of Revisions

Effectivity	Date	Aerofiche Card Effectivity

INTRODUCTION

TABLE OF CONTENTS/EFFECTIVITY

CHAPTER SECTION	SUBJECT	GRID NO.	EFFECTIVITY
	INTRODUCTION	1A6	July 1, 1993
	General	1A6	July 1, 1993
	Assignment of Subject Material	1A7	July 1, 1993
	Application	1A7	July 1, 1993
	Effectivity	1A7	July 1, 1993
	Aerofiche	1A8	July 1, 1993
	Identifying Revised Material	1A8	July 1, 1993
	Serial Number Explanation	1A8	July 1, 1993
	System/Chapter Index Guide	1A9	July 1, 1993
	Warnings, Cautions and Notes	1A14	July 1, 1993
	Supplementary Publications	1A14	July 1, 1993
	Vendor Publications	1A15	July 1, 1993
	Wire Codes	1A19	July 1, 1993

INTRODUCTION

A. General

The Piper PA-32R-301 / 301T Saratoga Maintenance Manual is prepared in accordance with the General Aviation Manufacturers Association (GAMA) Specification No. 2, with respect to the arrangement and content of the System/Chapters within the designated chapter-numbering system.

– NOTE –

Piper Aircraft Corporation expressly reserves the right to supersede, cancel and/or declare obsolete any part, part numbers, kits or publication that may be referenced in this manual without prior notice.

– WARNING –

USE ONLY GENUINE PIPER AIRCRAFT PARTS OR PIPER AIRCRAFT APPROVED PARTS OBTAINED FROM PIPER APPROVED SOURCES, IN CONNECTION WITH THE MAINTENANCE AND REPAIR OF PIPER AIRPLANES.

Genuine PIPER parts are produced and inspected under rigorous procedures to insure airworthiness and suitability for use in PIPER airplane applications. Parts purchased from sources other than PIPER, even though identical in appearance, may not have had the required tests and inspections performed, may be different in fabrication techniques and materials, and may be dangerous when installed in an airplane.

Reworked, salvaged or those parts obtained from non-PIPER approved sources, which the service history is unknown or cannot be authenticated, may have been subjected to unacceptable stresses or temperatures or have other hidden damage, not discernible through routine visual or usual nondestructive testing . This may render the part, component or structural assembly, even though originally manufactured by PIPER AIRCRAFT unsuitable and unsafe for airplane use.

PIPER AIRCRAFT expressly disclaims any responsibility for malfunctions, failures, damage or injury caused by use of non-PIPER approved parts.

Any question concerning the care of your airplane, be sure to include the airplane serial number in any correspondence.

INTRODUCTION (cont.)

B. Assignment of Subject Material
The content of this publication is organized at three levels. The three levels are:

1. System/Chapter - The various groups are broken down into major systems such as Environmental Systems, Electrical Power, Landing Gear, etc. The systems are arranged more or less alphabetically rather than by precedence or importance. They are assigned a number, which becomes the first element of the standardized numbering system. Thus, the element "28" of the number 28-40-01 refers to the chapter "Fuel". Everything concerning the fuel system will be covered in this chapter.
2. Sub-System/Section - The major systems/chapters of an airplane are broken down into subsystems. These sub-systems are identified by the second element of the standard numbering system. The element "40" of the number 28-40-01 concerns itself with the indicating section of the fuel system.
3. Unit/Subject - The individual units within a sub-system/section may be identified by the third element of the standard numbering system. The element "01" of the number 28-40-01 is a subject designator. This element is assigned at the option of the manufacturer and may or may not be used.

C. Application
Any publication conforming to the GAMA format will use the same basic numbering system. A person wishing information concerning the indication portion of the fuel system, would refer to the System/Chapter Tab 28-Fuel. The table of contents in the front of this chapter will provide a list of sub-systems covered in this chapter. For example, the fuel system chapter with a full index would contain:

28-00	General
28-10	Storage (Tanks, cells, necks, caps, etc.)
28-20	Distribution (Fuel lines, pumps, valves, controls, etc.)
28-30	Dump (If in-flight dumping system is installed)
28-40	Indicating (Quantity, temperature, pressure, etc.)

Refer to the table of contents for a complete breakdown and list of the System/Chapters. The material is arranged in ascending numerical sequence.

D. Effectivity
The Log of Revisions following the title page of the manual is a record of the revisions that have been issued for the manual.

INTRODUCTION (cont.)

E. Aerofiche

The General Aviation Manufacturers Association (GAMA) have developed specifications for microfiche reproduction of aircraft publications. The information compiled in this Aerofiche Maintenance Manual will be kept current by revisions distributed periodically. These revisions will supersede all previous revisions and will be complete Aerofiche card replacements and shall supersede Aerofiche cards of the same number in the set.

Conversion of Aerofiche alpha/numeric code numbers:
Example: 2J16 = Aerofiche card number two of a given set and grid location J16.

First number "2" is the Aerofiche card number.
Letter "J" is the horizontal line reference per card.
Second number "16" is the vertical line reference per card.

F. Identifying Revised Material
A revision to a page is defined as any change to the printed matter that existed previously. Revisions, additions and deletions shall be identified by a vertical black line along the left-hand margin of the page opposite only that portion of the printed matter that was changed.

A black line in the left-hand margin opposite the chapter/section/subject, page number and date, will indicate that the text was unchanged but the material was relocated to a different page.

G. Serial Number Explanation

PA-32R-301 Saratoga SP - 1980
Serial Numbers 32R-8013001 thru 32R-8013139
PA-32R-301 Saratoga SP - 1981
Serial Numbers 32R-8113001 thru 32R-8113123
PA-32R-301 Saratogo SP-1982
Serial Numbers 32R-8213001 thru 32R-8213060
PA-32R-301 Saratoga SP- 1993
Serial Numbers 32R-8313001 thru 32R-8313030
PA-32R-301 Saratoga SP-1984
Serial Numbers 32R-8413001 thru 32R-8413024
PA-32R-301 Saratoga SP-1985
Serial Numbers 32R-8513001 thru 32R-8513016
PA-32R-301 Saratoga SP-1986
Serial Numbers 32R-8613001 thru 32R-8613005 and 3213001 thru 3213002
PA-32R-301 Saratoga SP-1987
Serial Numbers 3213003 thru 3213008
PA-32R-301 Saratoga SP-1988
Serial Numbers 3213009 thru 3213019
PA-32R-301 Saratoga SP-1989
Serial Numbers 3213020 thru 3213033 and 3213035
PA-32R-301 Saratoga SP-1990
Serial Numbers 3213034, 3213036, and 3213037
PA-32R-301 Saratoga SP-1992
Serial Numbers 3213038, 3213041

INTRODUCTION (cont.)

G. Serial Number Explanation (cont.)

PA-32R-301 Saratoga II HP-1994
Serial Numbers 3213042 and up

PA-32R-301T Turbo Saratoga SP - 1980
Serial Numbers 32R-8029001 thru 32R-8029110 and 32R-8029121
PA-32R-301T Turbo Saratoga SP - 1981
Serial Numbers 32R-8129001 thru 32R-8129114
PA-32R-301T Turbo Saratoga SP - 1982
Serial Numbers 32R-8229001 to 32R-8229068
PA-32R-301T Turbo Saratoga SP - 1993
Serial Numbers 32R-8329001 TO 32R-8329040
PA-32R-301T Turbo Saratoga SP - 1984
Serial Numbers 32R-8429001 thru 32R-8429027
PA-32R-301T Turbo Saratoga SP - 1985
Serial Numbers 32R-8529001 thru 32R-8529020
PA-32R-301T Turbo Saratoga SP - 1986
Serial Numbers 32R-8629001 thru 32R-8629005 and 3229001 thru 3229002
PA-32R-301T Turbo Saratoga SP - 1987
Serial Numbers 32R-8629006 and 32290003

H. System/Chapter Index Guide

The following System/Chapter, Subsystem Section Index Guide is prepared in accordance with GAMA Specification No. 2 for use with Maintenance Manuals. The following chapters are not applicable to this Maintenance Manual: 31, 36, 38, 49, 53, 54, 60, 72, 75, and 83.

SYSTEM/ CHAPTER	SUB-SYSTEM/ SECTION – GRID NUMBER	TITLE
INTRODUCTION		
4	AIRWORTHINESS LIMITATIONS	
	00 – 1C3	General
5	TIME LIMITS/MAINTENANCE CHECKS	
	00 – 1C6	General
	10 – 1C7	Time Limits
	20 – 1C8	Scheduled Maintenance
	50 – 1D2	Unscheduled Maintenance Checks
6	DIMENSIONS AND AREAS	
	00 – 1D8	General
7	LIFTING AND SHORING	
	10 – 1D23	Jacking
8	LEVELING AND WEIGHING	
	10 – 1E3	Weighing and Balancing
	20 – 1E4	Leveling

INTRODUCTION (cont.)

H. System/Chapter Index Guide (cont.)

SYSTEM/ CHAPTER	SUB-SYSTEM/ SECTION – GRID NUMBER	TITLE
9	TOWING AND TAXIING	
	10 – 1E7	Towing
	20 – 1E8	Taxiing
10	PARKING AND MOORING	
	10 – 1E11	Parking
	20 – 1E12	Mooring
11	REQUIRED PLACARDS	
	20 – 1E15	Exterior Placards and Markings
	30 – 1E19	Interior Placards and Markings
12	SERVICING	
	00 – 1F4	General
	10 – 1F7	Replenishing
	20 – 1G1	Scheduled Servicing
20	STANDARD PRACTICES - AIRFRAME	
	00 – 1G19	General
21	ENVIRONMENTAL SYSTEMS	
	00 – 1H8	General
	40 – 1H10	Heating
	50 – 1H14	Cooling
22	AUTO FLIGHT	
	00 – 1J9	General
23	COMMUNICATIONS	
	00 – 1J14	General
	20 – 1J16	Emergency Locator Transmitter
24	ELECTRICAL POWER	
	00 – 1K1	General
	30 – 1K3	DC Generation
	40 – 1L19	External Power
	50 – 1L21	Electrical Load Distribution
25	EQUIPMENT/FURNISHINGS	
	10 – 2A15	Flight Compartment

INTRODUCTION (cont.)

H. System/Chapter Index Guide (cont.)

SYSTEM/ CHAPTER	SUB-SYSTEM/ SECTION – GRID NUMBER	TITLE
27	FLIGHT CONTROLS	
	00 – 2A23	General
	10 – 2B7	Aileron and Tab
	20 – 2B18	Rudder and Tab
	30 – 2C5	Elevator and Tab
	50 – 2C21	Flaps
28	FUEL	
	00 – 2D14	General
	10 – 2D20	Storage
	20 – 2E10	Distribution
	40 – 2E14	Indicating
29	HYDRAULIC POWER	
	00 – 2E21	General
	10 – 2F19	Main
30	ICE AND RAIN PROTECTION	
	00 – 2G19	General
	10 – 2H1	Airfoil
	30 – 2H17	Pitot and Static
	40 – 2H19	Windows, Windshields and Doors
	60 – 2H21	Propellers/Rotors
	80 – 2H23	Detection
32	LANDING GEAR	
	00 – 3A18	General
	10 – 3B4	Main Gear and Doors
	20 – 3B22	Nose Gear and Doors
	30 – 3C16	Extension and Retraction
	40 – 3C22	Wheels and Brakes
	60 – 3D18	Position and Warning

INTRODUCTION (cont.)

H. System/Chapter Index Guide (cont.)

SYSTEM/ CHAPTER	SUB-SYSTEM/ SECTION – GRID NUMBER	TITLE
33	LIGHTS	
	00 – 3E2	General Compartment
	10 – 3E6	Flight Compartment
	40 – 3E8	Exterior
34	NAVIGATION AND PITOT/STATIC	
	00 – 3E14	General
	10 – 3E18	Flight Instrtuments Pitot/Static
	20 – 3E22	Attitude & Direction
	40 – 3F2	Independent Position Determining
35	OXYGEN	
	00 – 3F10	General
	10 – 3F12	Crew – Passenger
37	VACUUM	
	00 – 3G8	General
	10 – 3G12	Distribution
	20 – 3G16	Indicating
39	ELECTRICAL / ELECTRONIC PANELS & MULTIPURPOSE PARTS	
	40 – 3G20	Multipurpose Electrical Parts
51	STRUCTURES	
	00 – 3G24	General
52	DOORS	
	00 – 3H16	General
	10 – 3H18	Passenger/Crew
	30 – 3I2	Cargo
55	STABILIZERS	
	10 – 3I6	Horizontal Stabilizers
	30 – 3I12	Vertical Stabilizer
	40 – 3I14	Rudder

INTRODUCTION (cont.)

H. System/Chapter Index Guide (cont.)

SYSTEM/ CHAPTER	SUB-SYSTEM/ SECTION – GRID NUMBER	TITLE
56	WINDOWS	
	10 – 3I18	Flight Compartment
	20 – 3I20	Cabin
57	WINGS	
	00 – 3J2	General
	20 – 3J4	Auxiliary Structure
	40 – 3J6	Attach Fittings
	50 – 3J12	Flight Surfaces
61	PROPELLERS	
	10 – 3J20	Propeller Assembly
	20 – 3K6	Controlling
70	STANDARD PRACTICES - ENGINE	
	00 – 3K12	General
71	POWER PLANT	
	00 – 3K16	General
	10 – 3L6	Cowling
73	ENGINE FUEL SYSTEMS	
	10 – 4A15	Distribution
	20 – 4A20	Controlling
74	IGNITION	
	00 – 4B3	General
	10 – 4B5	Electrical Power Supply
	20 – 4B22	Distribution
	30 – 4C7	Switching
77	ENGINE INDICATING	
	00 – 4C13	General
	10 – 4C13	Power
	20 – 4C16	Temperature
78	EXHAUST	
	00 – 4C23	General

INTRODUCTION (cont.)

H. System/Chapter Index Guide (cont.)

SYSTEM/ CHAPTER	SUB-SYSTEM/ SECTION – GRID NUMBER	TITLE
79	OIL	
	20 – 4D7	Distribution
	30 – 4D7	Indicating
80	STARTING	
	00 – 4D11	General
	10 – 4D15	Cranking
81	TURBINES	
	20 – 4E1	Turbo-Supercharger
91	CHARTS & WIRING DIAGRAMS	
	00 – 4E16	General
	10 – 4F19	Electrical Schematics
95	SPECIAL PURPOSE EQUIPMENT	
	00 – 4J8	Special Purpose Equipment

I. Warnings, Cautions and Notes

These adjuncts to the text shall be used to highlight or emphasize important points when necessary. Warnings call attention to use of materials, processes, methods, procedures or limits which must be followed precisely to avoid injury or death to persons. Cautions call attention to methods and procedures which must be followed to avoid damage to equipment. Notes call attention to methods which make the job easier. Warning and caution shall be located directly above and notes directly beneath the text and be in line with the paragraphs to which they apply.

J. Supplementary Publications

The following is a list of publications providing servicing, overhaul and parts information on various components on the PA-46-310P/350P airplane, which you may use to supplement the maintenance manual.

Piper Publications:

(1) Parts Catalog - P/N 761 782
(2) Progressive Inspection Manual (50 hour) - P/N 761 788
(3) Periodic Inspection Report Form - P/N 230 1085

INTRODUCTION (cont.)

K. Vendor Publications

The following is a list of the vendor publications, used in conjunction with the servicing, overhaul and parts information on various components.

– WARNING –

WHEN SERVICING OR INSPECTING VENDOR EQUIPMENT INSTALLED IN PIPER AIRCRAFT, IT IS THE USER'S RESPONSIBILITY TO REFER TO THE APPLICABLE VENDOR PUBLICATION.

1. AIR CONDITIONING COMPRESSOR:
   Vendor Address: York Industries
   1750 Toronita Street
   York, Pennsylvania 17402
   (717) 846-1988

2 ALTERNATOR
   Vendor Address: The Prestolite Co. / Division of Eltra Corp.
   P. O. Box 280, Mortaon and Backus Streets
   Bay City, Michigan 48706

3 ALTERNATOR
   Vendor Address: Ford Motor Company
   Ford Electrical and Electronics
   6 Parkland Blvd., Suite 450
   Dearborn, Michigan 48126
   (313) 322-4502

4 ALTERNATOR
   Vendor Address: Electro Systems
   Airport Complex
   P. O. Box 273
   Fort Deposit, Alabama 06032
   (205) 227-8306

5. AUTOFLIGHT:
   Vendor Address: Century Flight Systems
   P. O. Box 610
   Mineral Wells, Texas 76067

6. AUTOFLIGHT:
   Vendor Address: Bendix/King Radio Corporation
   400 N. Rogers Road
   Olathe, Kansas 66062
   (913) 782-0400

INTRODUCTION (cont.)

K. Vendor Publications (cont.)

7. BRAKES:
   Vendor Address: Parker Hannifin Corp.
   Aircraft Wheel and Brake Division
   1160 Center Road
   Avon, Ohio 44011
   (216) 871-6424

8. DEICER SYSTEMS:
   Vendor Address: B.F. Goodrich
   Transportation Products Division
   500 S. Main Street
   Akron, Ohio 44318
   (216) 374-2000

9. EMERGENCY LOCATOR TRANSMITTER:
   Vendor Address: Narco Avionics Division
   455 Pennsylvania Ave.
   Ft. Washington, Pennsylvania 19034
   (215) 641-5800

10. ENGINE:
   Maintenance Manual: TEXTRON LYCOMING
   Vendor Address: Textron Lycoming/ Subsidiary of Textron Inc.
   652 Oliver Street, Williamsport, Pennsylvania 17701

11. ELECTRIC FUEL PUMP,
   Vendor Address: Parker Hannifin Corp.
   Airborne Division
   P.O. Box 4032, 711 Taylor Street
   Elyria, Ohio 44036
   (216) 323-4676, 777-9500

12. ELECTRIC FUEL PUMP,
   Vendor Address: Weldon Pumps
   340 Golden Oak Parkway
   P. O. Box 46479
   Oakwood Village, Ohio 44146
   (216) 232-2282

13. FUEL CELLS
   Vender Address Engineered Fabrics Corporation
   669 Goodyear Street
   Rockmart, GA 30153
   (404) 684-7855

INTRODUCTION (cont.)

K. Vendor Publications (cont.)

14. GEAR LOCKING ACTUATORS, NOSE GEAR DOOR ACTUATOR, HYDRAULIC PUMP AND ALL HYDRAULIC COMPONENTS:

Vendor Address: Parker Hannifin Corp.
1160 Center Road
Avon, Ohio 44011
(216) 871-6424HI-LOK FASTENERS AND TOOLS:

Vendor Address: Hi-Shear Corporation
2600 Skypark Drive
Torrance, California 90509
(213) 326-8110

15. MAGNETOS:

Vendor Address: Teledyne Continetal Motors
Bendix Magneto Division
P. O. Box 90
Mobile, Alabama 36601
(205) 438-3411

16. MAGNETOS:

Vendor Address: Slick Electro Inc.
530 Blackhawk Park Ave.
Rockford, Illinois 61101
(815) 965-7704

17. NAVIGATION/STROBE LIGHTS STANDBY/MAP LIGHTS:

Vendor Address: Whelen Engineering Co. Inc.
Deep River, Conneticut
(203) 526-5308

18. OXYGEN SYSTEM:

Vendor Address: Scott Aviation
2225 Erie Street
Lancaster, New York 14086
(716) 683-5100

19. PROPELLER AND PROPELLER GOVERNOR:

Overhaul Instructions:
Vendor Address: Hartzell Propeller Inc.
350 Washington Ave.
Piqua, Ohio 45356
(523) 773-7413

INTRODUCTION (cont.)

K. Vendor Publications (cont.)

20. RADAR, WEATHERSCOUT:

Vendor Address: Sperry Flight Systems/ Avionics Division
8500 Balboa Blvd.
P.O. Box 9028
Van Nuys, California 91409
(213) 894-8111

21. TURBOCHARGER, SAFETY AND OUTFLOW VALVE, CONTROLLER VALVE:

Vendor Address: Garrett
AiResearch Industrial Division
3201 Lomita Blvd.
Torrance, California 90505

22. VACUUM PUMP, VACUUM REGULATORS DEICER PUMP:

Vendor Address: Parker Hannifin Corp.
1160 Center Road
Avon, Ohio 44011
(216) 871-6424

INTRODUCTION (cont.)

L. Wire Codes

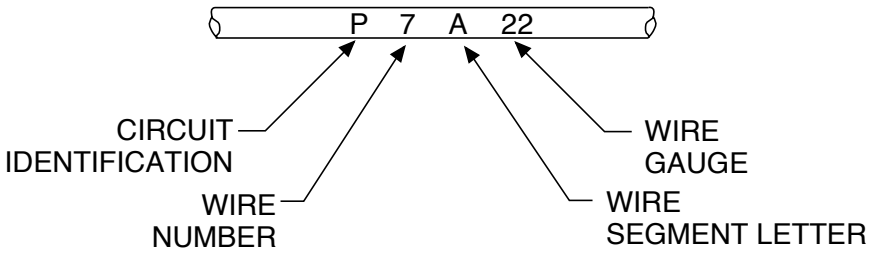

Schematic Wire Codes
Figure 1

CIRCUIT IDENTIFICATION	CIRCUIT
A	AutoPilot
AC	Vent / Air Conditioning
C	Control Surface
CL	Cigar Lighter
CP	Cabin Pressurization
D	Pitot, Stall Warning Heat and Propeller Heat
E	Engine Instrument
F	Flight Instrument
G	Landing Gear
GB	Vent / Defogger
J	Ignition
K	Starter
L	Lighting
M	Hourmeter
OX	Oxygen System
P	Power
Q	Fuel and Oil
RP	Radio Power
RC	Avionics Cooling
S	Stall Warning
W	Warning

HARNESS CONNECTOR NUMBERS AND LOCATION

E100 Series - Left Wing
E200 Series - Right Wing
E300 Series - Pressurized Fuselage
E400 Series - Engine and Baggage Compartment
E500 Series - Tail Cone

INTRODUCTION (cont.)

M. Wire Symbols

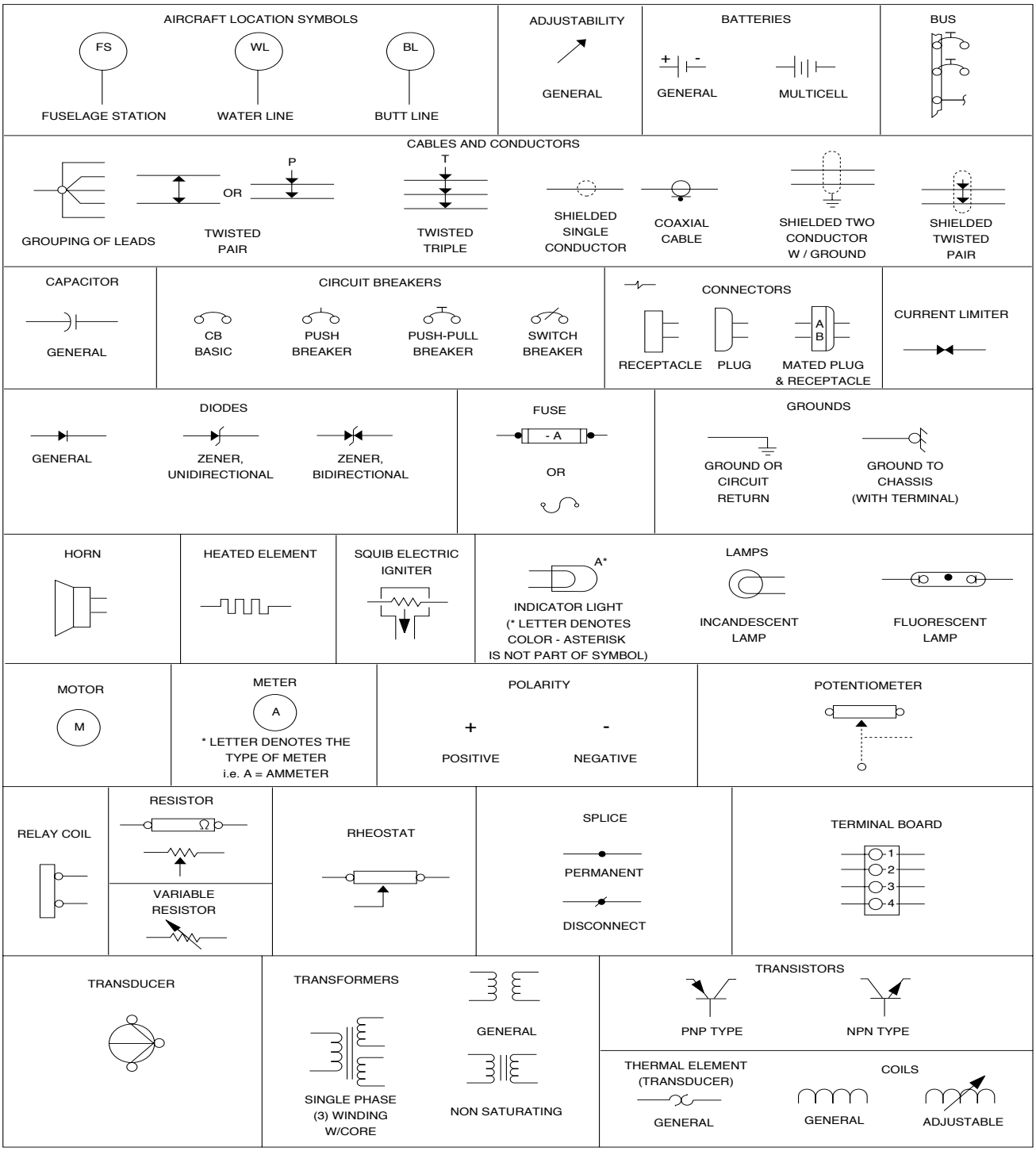

Schematic Wire Symbols
Figure 2 (Sheet 1 of 2)

INTRODUCTION (cont.)

M. Wire Symbols

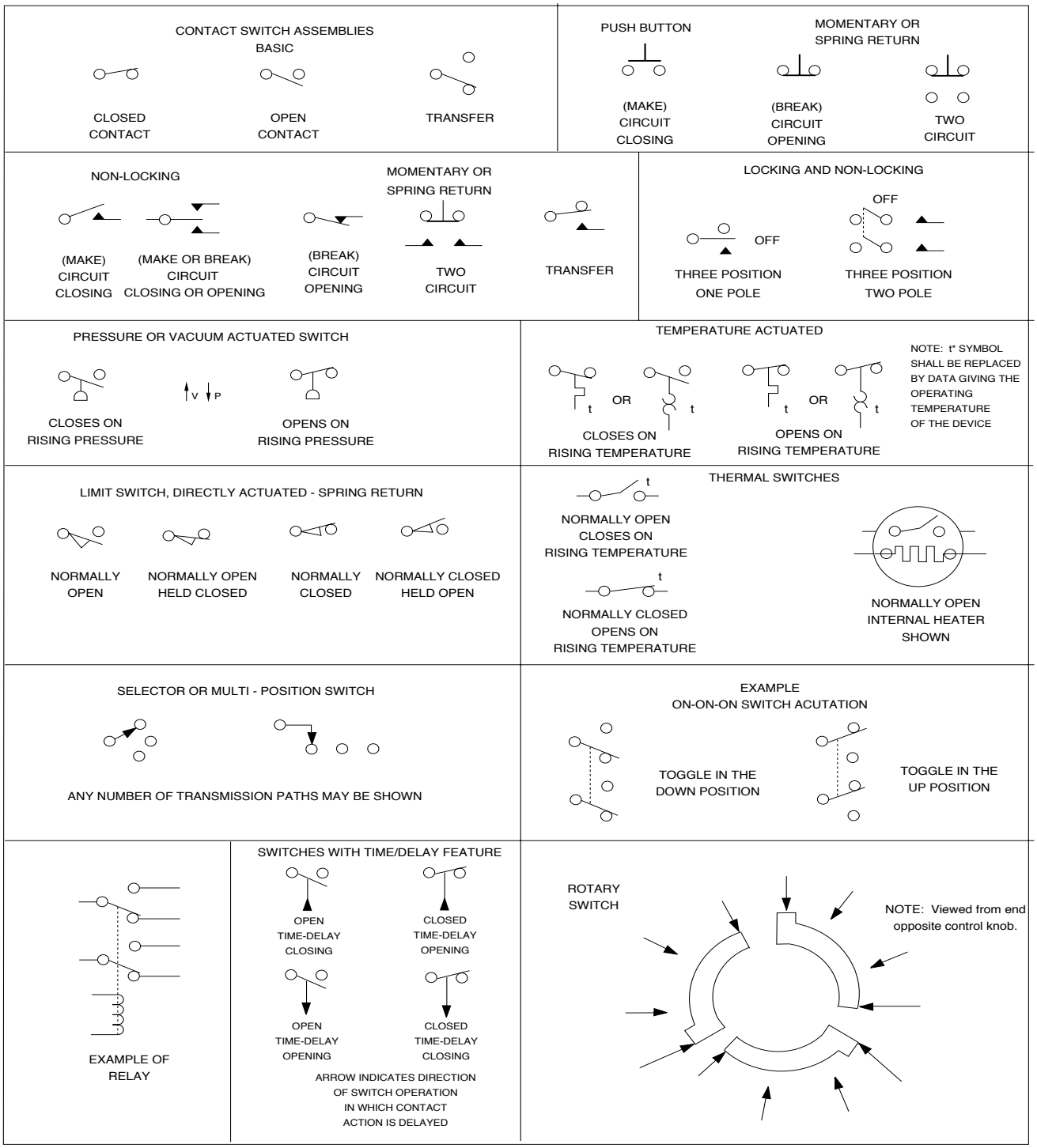

Schematic Wire Symbols
Figure 2 (Sheet 2 of 2)

INTENTIONALLY LEFT BLANK

GRIDS 1A23 THROUGH 1A24
INTENTIONALLY LEFT BLANK

ALPHA-NUMERIC INDEX (cont.)

SUBJECT	CHAPTER	PAGE	GRID NO.

INFORMATION PENDING

ALPHA-NUMERIC INDEX (cont.)

SUBJECT	CHAPTER	PAGE	GRID NO.

GRIDS 1B2 THROUGH 1B24
INTENTIONALLY LEFT BLANK

CHAPTER

4

AIRWORTHINESS LIMITATIONS

CHAPTER 4 - AIRWORTHINESS LIMITATIONS

TABLE OF CONTENTS/EFFECTIVITY

CHAPTER SECTION	SUBJECT	GRID NO.	EFFECTIVITY
4-00-00	AIRWORTHINESS LIMITATIONS	1C3	July 1, 1993
4-00-00	General	1C3	July 1, 1993

AIRWORHTINESS LIMITATIONS.

GENERAL.

The airworthiness limitations is FAA approved and specifies inspections and maintenance required under Part 91.163 of the Federal Aviation Regulatsions.

The following limitations related to fatigue life of the airplane and its components have been established-with respect to the PA-32R-301/301T airplane:

1. The safe life of the airframe structure will be released when the information becomes available.
2. The safe limit of the propeller blades is unlimited.

— NOTE —

Refer to the LIMITATIONS in the Pilot's Operating Handbook and FAA Approved Airplane Flight Manual for a detailed delineation of the flight limitations of the airplane. The mandatory replacement time and or inspection intervals of life limited parts are contained in Chapter 5 of this manual.

— END —

CHAPTER

5

TIME LIMITS / MAINTENANCE CHECKS

CHAPTER 5 - TIME LIMITS/MAINTENANCE CHECKS

TABLE OF CONTENTS/EFFECTIVITY

CHAPTER SECTION	SUBJECT	GRID NO.	EFFECTIVITY
5-00-00	GENERAL	1C6	July 1, 1993
5-10-00	TIME LIMITS	1C7	July 1, 1993
5-10-00	Inspection Requirements	1C7	July 1, 1993
5-10-00	Preflight Checks	1C7	July 1, 1993
5-10-00	Overlimits Inspection	1C7	July 1, 1993
5-20-00	SCHEDULED MAINTENANCE	1C8	July 1, 1993
5-20-00	General Purpse Description	1C8	July 1, 1993
5-20-00	Definitions	1C8	July 1, 1993
	Inspection Requirements	1C11	July 1, 1993
5-20-00	Periodic Inspection	1C12	July 1, 1993
5-20-00	Notes	1C24	July 1, 1993
5-50-00	UNSCHEDULED MAINTENANCE CHECKS	1D5	July 1, 1993
5-50-00	General	1D5	July 1, 1993
5-50-00	Special Inspections as Required, Upon Condition	1D5	July 1, 1993

GENERAL.

This chapter provides instructions for conducting inspections. Repair or replacement instructions for those components found on the unserviceable at inspection may be found in the chapters covering the applicable aircraft system. When working on engines, ground the magneto primary circuit before performing any operation.

TIME LIMITS.

INSPECTION REQUIREMENTS

The required inspection procedures are listed in Periodic Inspections. The inspection procedure is broken down into major groups which include Propeller, Engine, Turbocharger, Cabin, Fuselage and Empennage,Wing, Landing Gear, Operational Inspection and General. The first column in each group lists in the inspection or procedure to be performed. The second column is divided into four columns indicating the required inspection intervals of 50 hours, 100 hours, 500 hours, and 100 hours. Each inspection or operation is required at each of the inspection intervals as indicated by a circle (O). If an item is not entirely accessible or must be removed, refer to the applicable chapter of this manual for instructions on how to gain access to remove the item. When performing inspection forms furnished by the Piper Factory Service Department, available through Piper Dealers or Distributors.

— NOTE —

In addition to inspection intervals required in Periodic Inspections, preflight inspections must be performed.

PREFLIGHT CHECKS.

This check is for the pilot and/or mechanic and should become part of the airplane operational routine and/or preflight check before each flight. Refer to Section IV of the Pilot's Operating Manual for a listing of items that must be checked.

OVERLIMITS INSPECTION.

If the airplane has been operated so that any of its components have exceeded their maximum operational limits, check with the appropriate manufacturer.
1A22

A. Scheduled Maintenance

1. General Purpose Description

Piper Inspection programs comply with the F.A.A. Federal Aviation Regulations Parts 43, 91 and 135. The owner/operator is primarily responsible for maintaining the airplane in an airworthy condition, including compliance with all applicable Airworthiness Directives and conformity with the requirements in FAR 91.169, 91.171 and 91.172.

The inspection programs are set up in manual form and are available from the Piper Service Centers under Part Numbers 230 1045 (Periodic Inspection) and 761 737 (Progressive 50 Hour Inspection).

Facts you should know:

Service Bulletins, Service Letters, and Instructions are sent to the registered owner of the affected aircraft.

The registered owners name and address used on the Aircraft Registration Certificate is the name and address that Piper Aircraft uses to mail Service Bulletins, Service Letters, and P.O.H. Revisions.

If the aircraft is based and/or operated at a different location and/or by persons other than those recorded on the aircraft registration, then it is the responsibility of the bonafide owner(s) to forward the above Bulletins and Letters to those locations or persons.

Changes in aircraft registration may take a substantial amount of time to be recorded by the Federal Aviation Administration and received by Piper Aircraft to change the mailing address. Owners and operators should make arrangements to keep abreast of service releases during this interim period through their Piper Service Center.

The Federal Aviation Administration (FAA) publishes Airworthiness Directives (AD's) that apply to specific aircraft. They are mandatory changes and are to be complied within a time limit set by the FAA. When an AD is issued, it is sent to the latest registered owner of the affected aircraft and also to subscribers of the service. The owner should periodically check with his Piper Service Center or A & P mechanic to see whether he has the latest issued AD against his airplane. The owner is solely responsible for being aware of and complying with airworthiness directives.

Piper Service Bulletins are of special importance and Piper Considers Compliance mandatory. These are sent to the latest registered owners and Piper Service Centers.

Service Letters deal with product improvements and service hints pertaining to the aircraft. They are sent to the Piper Service Center and directly to the owners so they can properly service the aircraft and keep it up to date with the latest changes. Owners should give careful attention to the Service Letter information

A. Scheduled Maintenance (continued)

1. General Purpose Description (continued)

Facts you should know: (continued)

Service Spare Letters which are usually sent to Piper Service Centers, offer improved parts kits and optional equipment which were not available originally and which may be of interest to the owner.

An owner should periodically check with a Piper Service Center to find out the latest information to keep his aircraft up to date.

Piper Aircraft Corporation has a subscription service for the Service Bulletins, Service Letters, and Service Spares Letters. This service is offered to interested persons such as owners, pilots, and mechanics at a nominal fee and may be obtained through Piper Service Centers. Owners residing outside of the United States are urged to subscribe to this service since Piper cannot obtain the addresses of foreign owners. Service Product Support Manuals and revisions are available through Piper Service Centers.

WARNING: WHEN SERVICING OR INSPECTING VENDOR EQUIPMENT INSTALLED IN PIPER AIRCRAFT, IT IS THE USERS RESPONSIBILITY TO REFER TO THE APPLICABLE VENDOR PUBLICATIONS.

2. Definitions:

(a) Inspections - Must be performed only by Certified Mechanics who are qualified on this aircraft, utilizing acceptable methods, techniques and practices to determine physical condition and detect defects.

(b) Checks - Can be performed by pilots and/or mechanics who are qualified on this aircraft and consists of examinations in the form of comparisons with stated standards for the purpose of verifying condition, accuracy and tolerances.

(c) Detailed Inspections - Consists of a thorough examination of the appliances, the aircraft and the components and systems with such disassembly as is necessary to determine condition.

(d) Approved Inspection - Means a continuing airworthiness inspection of an airplane and its various component and systems at scheduled interval in accordance with procedures approved by the Administrator of the Federal Aviation Administration.

(e) Inspection Time Limitations - Late compliance with the inspection interval of 100 hour may be extended by not more than ten (10) hours while enroute and for changing an inspection interval because of service experience. The time used to reach the next inspection facility must be deducted from the next inspection time.

(f) Tests - Operation of aircraft components, appliances or systems to evaluate functional performance.

A. Scheduled Maintenance (continued)

2. Definitions (continued):

(g) Operation Test - This test is used to ascertain that a system component is in operable condition and can be performed with the equipment installed in the aircraft. In addition, each operational test must be performed by an FAA Certified Repair Station appropriately rated or by a Certified Mechanic who is qualified on this aircraft. The recording of the above function must be made in the permanent aircraft records by the authorized individual performing the test.

(h) Functional Test - This test is used to ascertain that system or component is functioning properly and is in conformance with minimum acceptable design specifications. This test may require the use of supplemental bench test equipment. In addition, each functional test must be performed by an FAA Certified repair Station with appropriate ratings or by a Certified Mechanic who is qualified on this aircraft. The recording of the above function must be made in the permanent aircraft records by the authorized individual performing the test.

(i) Bench Check - Means removal of component from the aircraft to inspect for cleanliness, impending failure, need for lubrication, repair or replacement of parts and calibration to at least the manufacturers specifications using the manufacturers recommended test equipment or standards or the equivalent.
Each bench test will be performed by a Piper Service Center, FAA Certified Repair Station with appropriate rating or by a certified mechanic. This test will be performed at the scheduled interval regardless of any bench test performed on a particular component while being repaired/overhauled before scheduled interval bench test. After the component is installed into the aircraft, an operational test of the component and its related system should be performed to ensure proper function. Serviceable parts that were issued to the component will be filed in the aircraft permanent records. The person performing the check must make appropriate entries in the aircraft's permanent maintenance record.

(j) Maintenance - The word maintenance as defined by FAR Part 1, means "inspection, overhaul, repair, preservation and the replacement of parts, but excludes preventive maintenance."

(k) Routine Inspections - Consists of a visual examination or check of the aircraft and its components and systems without disassembly.

(l) Special Inspections - Involve those components, systems or structure which by their application or intended use require an inspection peculiar to, more extensive in scope or at a time period other than that which is normally accomplished during the event inspection.

(m) Time in Service - As used in this procedure is the time from the moment the aircraft leaves the ground until it touches the ground at the next point of landing.

(n) On Condition - Maintenance concept whereby some components of the engine remain in service as long as they appear airworthy at each inspection. The replace-on-condition concept is as opposed to replace after a "life-limited" time interval.the authorized individual performing the test.

A. Scheduled Maintenance (continued)

3. Inspection Requirements

The inspection procedures are broken down into major groups which include Propeller, Engine, Turbocharger, Cabin and Cockpit, Landing Gear, Fuselage and Empennage, Wing, Operational, Special, General, and Notes.

(a) Periodic Inspection

The first column in each group lists the inspection or procedure to be performed. The second column is divided into four additional columns indicating the required inspection intervals of 50 hours, 100 hours, 500 hours, and 1000 hours. Inspections must be accomplished by persons authorized by the F.A.A. Each inspection or operation is required at each of the inspection intervals as indicated by a circle (O). If an item is not entirely accessible or must be removed, refer to the applicable chapter of this manual for instructions on how to gain access to remove the item. When performing the inspections, use form (P/N 230 1085) available through Piper Service Centers. In addition to inspection intervals required in Periodic Inspections, preflight inspection must also be performed.

References to maintenance manual applicable areas are per the “chapter - system/sub-system” assignment of subject material numbering system.

(b) Progressive Inspection

The Progressive Inspection was designed to permit the best utilization of the aircraft by scheduling inspections through the use of a planned inspection schedule. This schedule is prepared in a manual form, which is available from Piper Service Sales under P/N 761 788. Refer to Piper Parts Price List Aerofiche for revision checklist to ensure obtaining latest issue.

(c) Overlimits Inspections

If the airplane has been operated so that any of its components have exceeded their maximum operational limits, special inspections may be required by Piper and/or the component manufacturer.

A. Scheduled Maintenance (continued)

4. Periodic Inspection

— NOTE —

Refer to Notes 1, 2, 3, and 4 before performing inspections.

NATURE OF INSPECTION	Inspection time (hrs)			
	50	100	500	1000
A. PROPELLER GROUP				
1. Inspect spinner and back plate for cracks, dents, missing screws, and security	O	O	O	O
2. Inspect blades for nicks and cracks	O	O	O	O
3. Check for grease and oil leaks	O	O	O	O
4. Lubricate propeller per Lubrication Chart in maintenance manual	O	O	O	O
5. Inspect spinner mounting brackets for cracks and security		O	O	O
6. Inspect propeller mounting bolts for security and safety. Recheck torque values if safety is broken.		O	O	O
7. Inspect hub parts for cracks and corrosion (PA-32R-301/-301T SP) (See note 30)	O	O	O	O
Inspect hub parts for cracks and corrosion (PA-32R-301 II HP only)		O	O	O
— WARNING — ***Use extreme caution when rotating propeller by hand; propeller may kick back. Prior to rotating propeller ensure both magneto switch(s) are off (grounded). If magneto(s) are not grounded, turning propeller may start engine.***				
8. Rotate blades and check for tightness in hub pilot tube		O	O	O
9. Remove propeller; remove sludge from propeller and crankshaft			O	O
10. Inspect complete propeller and spinner assembly for security, chafing, cracks, deterioration, wear, and correct installation		O	O	O
11. Overhaul propeller per latest revision Hartzell Service Letter No. 61.				
B. ENGINE GROUP				
—WARNING — ***Use extreme caution when rotating propeller by hand; propeller may kick back. Prior to rotating propeller ensure both magneto switch(s) are off (grounded). If magneto(s) are not grounded, turning propeller may start engine.***				

A. Scheduled Maintenance (continued)

4. Periodic Inspection (continued)

— NOTE —

Refer to Notes 1, 2, 3, and 4 before performing inspections.

NATURE OF INSPECTION	Inspection time (hrs)			
	50	100	500	1000
B. ENGINE GROUP (cont)				
— NOTE — ***Read Notes 5, 21, and 22 prior to completing the following items.***				
1. Remove engine cowl and inspect for internal and external damage	O	O	O	O
2. Clean and inspect cowling for cracks, distortion, and loose or missing fasteners		O	O	O
3. Drain oil sump	O	O	O	O
4. Clean suction oil strainer at oil change; inspect strainer for foreign particles	O	O	O	O
5. Change full flow, cartridge type, oil filter element; inspect element for foreign particles (see to Note 6)	O	O	O	O
6. Inspect oil temperature sender unit for leaks and security		O	O	O
7. Inspect oil lines and fitting for leaks, security, chafing, dents, and cracks (see note 8	O	O	O	O
8. Clean and inspect oil radiator cooling fins		O	O	O
9. Remove and flush oil radiator (see Note 16)			O	O
— CAUTION — ***DO NOT USE MULTIGRADE OIL until Hartzell Service Bulletin 142B has been complied with.***				
10. Fill engine with oil per information on cowl or lubrication chart in maintenance manual	O	O	O	O
11. Clean engine with approved solvents		O	O	O
—CAUTION — ***Use caution not to contaminate vacuum pump with cleaning fluid. (Refer to latest revision Lycoming Service Instruction No. 1221.)***				
12. Inspect condition of spark plugs; (clean and adjust gap as required; adjust per latest revision Lycoming Service Instruction No. 1042)		O	O	O
— NOTE — ***If fouling of spark plugs is apparent, rotate bottom plugs to upper plugs.***				

A. Scheduled Maintenance (continued)

4. Periodic Inspection (continued)

— NOTE —

Refer to Notes 1, 2, 3, and 4 before performing inspections.

NATURE OF INSPECTION	Inspection time (hrs)			
	50	100	500	1000
B. ENGINE GROUP (cont)				
13. Inspect spark plug cable leads and ceramics for corrosion and deposits	O	O	O	O
14. Check cylinder compression (Ref: AC 43.13-1A)		O	O	O
15. Inspect cylinders for cracked or broken fins (see note 12)		O	O	O
16. Inspect rocker box covers for evidence of oil leaks. If found, replace gasket; torque cover screws 50 inch-pounds (see to note 11)	O	O	O	O
— NOTE — ***Lycoming requires a Valve Inspection be made after every 400 hours of operation. (See to note 11.)***				
17. Inspect ignition harness and insulators for high tension leakage and continuity		O	O	O
18. Check magneto points for proper clearance. Maintain clearance of 0.016.		O	O	O
19. Inspect magneto for oil seal leakage		O	O	O
20. Inspect breaker felts for proper lubrication		O	O	O
21. Inspect distributor block for cracks, burned areas or corrosion, and height of contact springs			O	O
22. Inspect magnetos to engine timing		O	O	O
23. Overhaul or replace magnetos (see note 7).	?	?	?	?
24. Remove air filter and clean per chapter 12. Replace as required.	O	O	O	O
25. Clean fuel injector inlet line screen	O	O	O	O
26. Inspect condition of alternate air valve and housing	O	O	O	O
27. Inspect intake seals for leaks and clamps for tightness. (Torque clamps 40-50 in.-lbs.)	O	O	O	O
28. Inspect all air inlet duct hoses. Replace as required.	O	O	O	O
29. Inspect condition of flexible fuel lines (see note 14)		O	O	O
30. Replace flexible fuel lines interconnect hose couplings. (Refer to note 14 for additional instructions.)				

A. Scheduled Maintenance (continued)

4. Periodic Inspection (continued)

— NOTE —

Refer to Notes 1, 2, 3, and 4 before performing inspections.

NATURE OF INSPECTION	Inspection time (hrs)			
	50	100	500	1000
B. ENGINE GROUP (cont)				
31. Inspect fuel system for leaks		O	O	O
32. Inspect fuel pumps for operation (engine-driven and electric)		O	O	O
33. Overhaul or replace fuel pumps (engine-driven and electric) (see note 7)	?	?	?	?
34. Inspect vacuum system pumps and lines. (Refer to note 23 for additional instructions.)	?	?	?	?
35. Overhaul or replace vacuum pump(s). (Refer to notes 24 and 25 for additional instructions.)			O	O
36. Inspect throttle, alternate air, mixture, and propeller governor controls for security, travel, and operation condition		O	O	O
37. Inspect exhaust stacks, connections and gaskets. (Refer to chapter 78.) (Replace gaskets as required.)		O	O	O
38. Inspect muffler, heat exchange, and baffles. (Refer to chapter 78.)		O	O	O
39. Inspect breather tube for obstructions and security		O	O	O
40. Inspect crankcase for cracks, leaks, and security of seam bolts		O	O	O
41. Inspect engine mounts for cracks and loose mounting		O	O	O
42. Inspect all engine baffles (also check engine baffle seals on PA-32R-301T)				
43. Inspect rubber engine mount bushings for deterioration. (Replace as required.)		O	O	O
44. Inspect firewall seals		O	O	O
45. Inspect condition and tension of alternator drive belt. (Refer to chapters 21 and 24 if air conditioning is installed.)		O	O	O
46. Lubricate alternator idler pulley (if installed); remove front grease seal and add grease. (Refer to lubrication chart, chapter 12.)		O	O	O
47. Inspect condition of alternator and starter		O	O	O
48. Inspect security of alternator or mounting		O	O	O
49. Check air conditioning compressor oil level. (Refer to note 9 for additional instructions.)		O	O	O
50. Inspect condition of compressor belt and tension. (Refer to chapter 21 for additional instructions.)		O	O	O
51. Inspect compressor clutch security and wiring. (Refer to note 10 for additional instructions.)		O	O	O
52. Inspect compressor mounting for cracks, corrosion, and security		O	O	O

A. Scheduled Maintenance (continued)

4. Periodic Inspection (continued)

— NOTE —

Refer to Notes 1, 2, 3, and 4 before performing inspections.

NATURE OF INSPECTION	Inspection time (hrs)			
	50	100	500	1000
B. ENGINE GROUP (cont)				
53. Check fluid in brake reservoir. Fill as required.	O	O	O	O
54. Inspect and lubricate all controls. (Refer to chapter 12 for additional instructions.)		O	O	O
55. Overhaul or replace propeller governor (refer to latest revision of Hartzell Service Letter No. 61.)				
56. Complete overhaul of engine or replace with factory rebuilt. (Refer to note 7 for additional instructions.)				
57. Install engine cowl	O	O	O	O
C. TURBOCHARGER GROUP (PA-32R-301T)				
1. Visually inspect system for oil leaks, exhaust system leaks, and general condition	O	O	O	O
2. Inspect the compressor wheel for nicks, cracks, or broken blades		O	O	O
3. Inspect for excess bearing drag or wheel rubbing against housing		O	O	O
4. Inspect turbine wheel for broken blades or signs of chafing		O	O	O
5. Inspect all V-band couplings for security and integrity of T-bolts and lock wire. (Refer to latest revision Piper Service Bulletin No. 884)		O	O	O
6. Inspect operation of alternate air control		O	O	O
7. Inspect oil inlet and outlet ports in center housing to include the inlet check valve for leaks		O	O	O
		O	O	O
8. Inspect turbine heat blanket for condition and security		O	O	O
9. Inspect interconnect linkage between wastegate valve and throttle. (Refer to latest revision of Piper S/B 675)		O	O	O
10. Inspect induction and exhaust components for worn or damaged areas, loose clamps, cracks and leaks		O	O	O
11 Inspect crossover exhaust flange for cracks and proper alignment (See Textron Lycoming Service Bulletin No. 484)		O	O	O
11. Inspect fuel injection nozzle reference manifold for deteriorated hose, loose connections, leaks, or obstructions		O	O	O
12. Inspect operation of compressor bypass door		O	O	O
13. Install engine cowl	O	O	O	O
D. CABIN GROUP				
1. Inspect cabin entrance, doors, and windows for damage, operation, and security		O	O	O
2. Inspect upholstery for tears		O	O	O

A. Scheduled Maintenance (continued)

4. Periodic Inspection (continued)

— NOTE —

Refer to Notes 1, 2, 3, and 4 before performing inspections.

NATURE OF INSPECTION	Inspection time (hrs)			
	50	100	500	1000
D. CABIN GROUP (cont)				
3. Inspect seats, seat belts, shoulder harnesses, security brackets, and bolts		O	O	O
4. Inspect trim operation		O	O	O
5. Inspect rudder pedals		O	O	O
6. Inspect parking brake valve and brake handle for operation and cylinder leaks		O	O	O
7. Inspect control wheels, column, pulleys, and cables. (Refer to notes 19 and 25 for additional inspection information.)		O	O	O
8. Inspect flap control cable attachment bolt. (Manually Operated Flaps only.)			O	O
9. On aircraft S/N 32-8524001 and up, inspect electric flap selector handle cable attachment for any signs of cable fraying. (See note 25.)			O	O
10. On aircraft S/N 32-8524001 and up, inspect the electric flap screw jack and attachments for condition and lubrication.			O	O
11. Check landing, navigation, strobe, cabin, and instrument lights	O	O	O	O
12. Inspect instruments, lines, and attachments		O	O	O
13. Inspect gyro operated instruments and electric turn and bank (Overhaul or replace as required.)		O	O	O
14. Replace central air filter		O	O	O
15. Clean or replace vacuum regulator filter		O	O	O
16. Inspect altimeter. (Calibrate altimeter system in accordance with FAR 91.170, if appropriate.)		O	O	O
17. Inspect operation of fuel selector valve. (Refer to note 20 for additional information.)		O	O	O
18. Inspect fuel valve drain lever cover for security. Check that door opens and closes freely and prevents operation of lever when closed (PA-32R-301/-301T SP only)	O	O	O	O
19. Inspect condition of heater controls and ducts		O	O	O
20. Inspect condition and operation of air vents		O	O	O
21. Inspect condition of air conditioning ducts		O	O	O
22. Remove and clean air conditioning evaporator filter		O	O	O
E. FUSELAGE AND EMPENNAGE GROUP				
1. Remove inspection plates and panels		O	O	O
2. Inspect baggage doors, latches, and hinges for operation and security		O	O	O

A. Scheduled Maintenance (continued)

4. Periodic Inspection (continued)

— NOTE —

Refer to Notes 1, 2, 3, and 4 before performing inspections.

NATURE OF INSPECTION	Inspection time (hrs)			
	50	100	500	1000
E. FUSELAGE AND EMPENNAGE GROUP (cont)				
3. Inspect battery, box, and cables. Inspect at least every 30 days. Flush box as required and fill battery per instructions on box.	O	O	O	O
4. Inspect electronic installations		O	O	O
5. Inspect bulkheads and stringers for damage		O	O	O
6. Inspect antenna mounts and electric wiring		O	O	O
7. Inspect hydraulic pump motor brushes (see note 18)		O	O	O
8. Check hydraulic pump fluid level. Fill as required.	O	O	O	O
9. Inspect hydraulic pump lines for damage and leaks. (Refer to latest revision of Piper Service Bulletin No. 616.)		O	O	O
10. Inspect for obstructions and contamination in inlet of backup landing gear extender actuator inlet head	O	O	O	O
11. Inspect air conditioning system for freon leaks		O	O	O
12. Inspect freon level in sight gauge of receiver-dehydrator (see chapter 21)	O	O	O	O
13. Inspect air conditioner condenser air scoop rigging	O	O	O	O
14. Inspect fuel lines, valves, and gauges for damage and operation		O	O	O
15. Remove, drain, and clean fuel strainer bowl and screen located in bottom of selector valve. Drain and clean at least every 90 days	O	O	O	O
16. Inspect security of all lines		O	O	O
17. Inspect vertical fin and rudder surfaces for damage		O	O	O
18. Inspect rudder hinges, sector and attachments for damage, security, and operation		O	O	O
19. Inspect vertical fin attachments for security		O	O	O
20. Inspect rudder control stops to ensure stops have not loosened and locknuts are tight		O	O	O
21. Inspect rudder hinge bolts for excess wear. Replace as required.		O	O	O
22. Inspect stabilator surfaces for damage		O	O	O
23. Inspect stabilator tab hinges, horn, and attachments for damage, security, and operation		O	O	O
24. Inspect stabilator attachments for corrosion, rust, and security.(See note 26.)		O	O	O
25. Inspect stabilator and tab hinge bolts and bearings for excess wear. Replace as required. (See note 26.)		O	O	O

A. Scheduled Maintenance (continued)

4. Periodic Inspection (continued)

— NOTE —

Refer to Notes 1, 2, 3, and 4 before performing inspections.

NATURE OF INSPECTION	Inspection time (hrs)			
	50	100	500	1000
E. FUSELAGE AND EMPENNAGE GROUP (cont)				
26. Inspect stabilator control stops to ensure stops are not loose. Ensure bolts and locknuts are tight		O	O	O
27. Inspect stabilator trim mechanism		O	O	O
28. Check all cable tensions using a tensiometer (see note 17)		O	O	O
29. Inspect aileron, rudder, stabilator, stabilator trim cables, turnbuckles, guides, and pulleys for safety, damage, and operation (see note 25)		O	O	O
30. Clean and lubricate stabilator trim drum screw			O	O
31. Clean and lubricate all exterior needle bearings				O
32. Lubricate per lubrication chart (refer to chapter 12)	O	O	O	O
33. Inspect anti-collision light for security and operation		O	O	O
34. Inspect security of Autopilot bridle cable clamps (see note 25)		O	O	O
35. Inspect all control cables, air ducts, electrical leads, lines, radio antenna leads, and attaching parts for security, routing, chafing, deterioration, wear, and correct installation (see note 25)		O	O	O
36. Inspect emergency locator transmitter battery for replacement date or time (see latest revision of Piper S/L No. 820)		O	O	O
37. Inspect E.L.T external whip antenna for damage. Replace if antenna has sharp bends or kinks		O	O	O
38. Reinstall inspection plates and panels		O	O	O
F. WING GROUP				
1. Remove inspection plates and fairings		O	O	O
2. Inspect surfaces and tips for damage, loose rivets, and conditions of walkway		O	O	O
3. Inspect aileron hinges and attachments		O	O	O
4. Inspect aileron control stops to ensure stops have not loosened and locknuts are tight		O	O	O
5. Inspect aileron cables, pulleys, and bellcranks for damage and operation (see note 26)		O	O	O
6. Inspect flaps and attachments for damage and operation		O	O	O
7. Inspect condition of bolts used with hinges. Replace as required				O
8. Lubricate per lubrication chart in maintenance manual	O	O	O	O
9. Inspect wing attachment bolts and brackets (see note 29)		O	O	O
10. Inspect fuel tanks and lines for leaks and water (see note 28)		O	O	O

A. Scheduled Maintenance (continued)

4. Periodic Inspection (continued)

— NOTE —

Refer to Notes 1, 2, 3, and 4 before performing inspections.

NATURE OF INSPECTION	Inspection time (hrs)			
	50	100	500	1000
F. WING GROUP (cont)				
11. Inspect fuel tanks for capacity and minimum octane markings		O	O	O
12. Inspect fuel cell vents (see note 15)		O	O	O
13. Inspect all control cables, air ducts, electrical leads, lines, and attaching parts for security, routing, chafing, deterioration, wear, and correct installation (see note 25)		O	O	O
14. Install inspection plates and fairings		O	O	O
G. LANDING GEAR GROUP				
1. Check oleo struts for proper extension; check for proper fluid level as required.	O	O	O	O
2. Inspect nose gear steering control and level		O	O	O
3. Inspect wheel alignment		O	O	O
4. Put airplane on jacks		O	O	O
5. Inspect tires for cuts, uneven or excessive wear, and slippage		O	O	O
6. Remove wheels, clean, inspect, and repack bearings		O	O	O
7. Inspect wheels for cracks, corrosion, and broken bolts		O	O	O
8. Check tire pressure	O	O	O	O
9. Inspect brake lining and disc for wear		O	O	O
10. Inspect brake backing plates for cracks		O	O	O
11. Inspect condition of brake and hydraulic lines		O	O	O
12. Inspect shimmy dampener operation		O	O	O
13. Inspect gear forks for damage		O	O	O
14. Inspect oleo struts for fluid leaks and scoring		O	O	O
15. Inspect gear struts, attachments, torque links, retraction links, and bolts for condition and security		O	O	O
16. Inspect downlock for operation and adjustment		O	O	O
17. Inspect torque link bolts and bushings. Rebush as required.			O	O
18. Inspect drag and side brace link bolts. Replace as required.				O
19. Inspect gear doors and attachments		O	O	O
20. Inspect warning horn and light for operation		O	O	O
21. Check normal-emergency gear retraction operation		O	O	O
22. Retract gear-inspect doors for clearance and operation		O	O	O
23. Inspect anti-retraction system		O	O	O

A. Scheduled Maintenance (continued)

4. Periodic Inspection (continued)

— NOTE —

Refer to Notes 1, 2, 3, and 4 before performing inspections.

NATURE OF INSPECTION	Inspection time (hrs)			
	50	100	500	1000
G. LANDING GEAR GROUP (cont)				
24. Inspect actuating cylinders for leaks and security		O	O	O
25. Inspect all hydraulic lines, electrical leads, and attaching parts for security, routing, chafing, deterioration, wear, and correct installation		O	O	O
26. Inspect position indicator switch and electrical leads for security		O	O	O
27. Lubricate per lubrication chart. (see chapter 12)	O	O	O	O
28. Ensure that landing gear is down and locked; remove airplane from jacks		O	O	O
H. OPERATIONAL INSPECTION				
– NOTE – ***Refer to note 27 prior to starting engine or taxiing airplane***				
1. Check fuel pump and fuel tank selector	O	O	O	O
2. Check fuel quantity, pressure, and flow readings	O	O	O	O
3. Check oil pressure and temperature	O	O	O	O
4. Check alternator output	O	O	O	O
5. Check manifold pressure	O	O	O	O
6. Check alternate air	O	O	O	O
7. Check parking brake	O	O	O	O
8. Check vacuum gauge	O	O	O	O
9. Check gyros for noise and roughness	O	O	O	O
10. Check cabin heater operation	O	O	O	O
11. Check magneto switch operation	O	O	O	O
12. Check magneto rpm variation	O	O	O	O
13. Check throttle and mixture operation	O	O	O	O
14. Check propeller smoothness	O	O	O	O
15. Check propeller governor action	O	O	O	O
16. Check engine idle	O	O	O	O
17. Check annunciator light panel	O	O	O	O
18. Check electronic equipment operation	O	O	O	O
19. Check operation of autopilot, including automatic pitch trim, and manual electric trim (see note 26)	O	O	O	O
20. Check air conditioner compressor clutch operation	O	O	O	O
21. Check air conditioner condenser scoop operation	O	O	O	O
22. Check (fly aircraft) Landing Gear System (see note 13)	O	O	O	O

A. Scheduled Maintenance (continued)

4. Periodic Inspection (continued)

— NOTE —

Refer to Notes 1, 2, 3, and 4 before performing inspections.

NATURE OF INSPECTION	Inspection time (hrs)			
	50	100	500	1000
I. GENERAL				
1. Aircraft conforms to FAA Specification	O	O	O	O
2. All latest revision of Airworthiness Directives complied with	O	O	O	O
3. All latest revision of Manufacturers' Service Bulletins and Letters complied with	O	O	O	O
4. Check for proper Pilot's Operating Handbook	O	O	O	O
5. Aircraft papers in proper order	O	O	O	O

A. Scheduled Maintenance (continued)

4. Periodic Inspection (continued)

— NOTE —

Refer to Notes 1, 2, 3, and 4 before performing inspections.

NATURE OF INSPECTION	Inspection time (hrs)			
	50	100	500	1000
PAGE INTENTIONALLY LEFT BLANK				

A. Scheduled Maintenance (continued)

4. Periodic Inspection (continued)

J NOTES

1. Refer to the last card of the Piper Parts Price List - Aerofiche for a checklist of current revision dates to Piper inspection reports and manuals.
2. All inspections or operations are required at each of the inspection intervals as indicated by a (O). Both the annual and 100 hour inspections are complete inspections of the airplane, identical in scope, while the 500 and 1000 hour inspections are extensions of the annual or 100 hour inspection, which require a detailed examination of the airplane, and overhaul or replacement of some major components. Inspections must be accomplished by persons authorized by the FAA.
3. Piper service bulletins are of special importance and Piper considers compliance mandatory.
4. Piper service letters are product improvements and service hints pertaining to servicing the airplane and should be given careful attention.
5. Inspections given for the power plant are based on the engine manufacturer's operator's manual (Lycoming Part No. 60297-10) for this airplane. Any changes issued to the engine manufacturer's operator's manual shall supersede or supplement the inspections outlined in this report.
6. Intervals between oil changes can be increased as much as 100% on engines equipped with full flow cartridge type, oil filters provided the element is replaced each 50 hours of operation. Refer to latest revision of Textron Lycoming Service Bulletin No. 480.
7. Replace at engine overhaul or 5 years, whichever comes first. (For engine overhaul, refer to latest revision of Lycoming Service Letter L201 and Lycoming Service Instruction 1009.)
8. Replace flexible oil lines at engine TBO per latest revision Lycoming Service Bulletin 240 and latest revision of Lycoming Service Letter L201B.
9. The compressor oil level should not be checked unless a freon leak has occurred, requiring an addition of freon to the system. ***CAUTION: Environmental regulations may require special equipment and procedures be utilized when charging air conditioning system with freon.***
10. Clean any traces of oil from the clutch surface.
11. At every 400 hours of engine operation, remove the rocker box covers and check for freedom of valve rockers when valves are closed. Look for evidence of abnormal wear or broken parts in the area of the valve tips, valve keepers, springs, and spring seats. If any indications are found, the cylinder and all of its components must be removed (including the piston and connecting rod assembly) and inspected for further damage. Replace any parts that do not conform with limits shown in the latest revision for Lycoming Service Table of Limits SSP1776.
12. Check cylinders for evidence of excessive heat indicated by burned paint on the cylinders. This condition is indicative of internal damage to the cylinder and, if found, its cause must be determined and corrected before the airplane is returned to service. Heavy discoloration and appearance of seepage at the cylinder head and barrel attachment area is usually due to emission of thread lubricant used during assembly of the barrel at the factory, or by slight gas leakage which stops after the cylinder has been in service for a while. This condition is neither harmful nor detrimental to engine performance and operation. If it can be proven that leakage exceeds these conditions, the cylinder must be replaced.

A. Scheduled Maintenance (continued)

4. Periodic Inspections

J NOTES (continued)

13. Fly airplane to check landing gear system in accordance with instructions given in chapter 29, Operational Check of Retractable Landing Gear System.
14. Replace flexible fuel supply hose and interconnect hose coupling at time of engine overhaul, or every five years, whichever comes first.
15. Replace fuel tank vent line flexible connections as required, but no later than 1000 hours of service.
16. Refer to latest revision Piper Service Bulletin 586, Inspection and Replacement of Engine Oil Coolers.
17. Maintain cable tensions specified in chapter 27.
18. Inspect brushes every 100 hours on airplanes used for training or every 500 hours on airplanes used for normal service.
19. Refer to latest revision Piper Service Bulletin 619.
20. Refer and comply with latest Piper Service Bulletin 772.
21. Refer to Lycoming Service Bulletin 469.
22. Refer to VSP 69.
23. Complete vacuum system inspection of aircraft that incorporates the Auxiliary Vacuum Pump/ Motor Assembly (4A3-1), requires gaining access to under the floorboard of the right side of the forward baggage compartment, where this assembly is located.
24. The Airborne Auxiliary Vacuum Pump/Motor Assembly (4A3-1) must be removed from service and replaced at 500 hours of operating time as indicated on the elapsed time indicator, or 10 years of installed time in aircraft, whichever comes first.
25. Examine cables for broken strands by wiping them with a cloth for their entire length. Visually inspect the cable thoroughly for damage not detected by the cloth. Replace any damaged or frayed cables. Refer to the latest edition of FAA Advisory Circular 43.13-1, Paragraph 198.
26. See latest revision of Piper Service Bulletin No. 856.
27. Refer to Flight Manual Supplement for preflight and flight check, for intended function in all models.
28. Sloshing of fuel tanks not approved. If tanks have been sloshed previously, refer to Chapter 28 for inspection procedure.
29. Check torque at forward and aft spar attach per Chapter 57, Figure 1.
30. Refer to latest revision of Hartzell Service Bulletins No's. 164 and 165.

GRIDS 1D2 TGHROUGH 1D4
PAGES 5-21 THROUGH 5-23
INTENTIONALLY LEFT BLANK

A. Unscheduled Maintenance Checks

1. General

The special inspections given, supplement the scheduled inspections as outlined in Periodic Inspections to include inspections which are required at intervals not compatible with airframe operating time or inspection intervals.

2. Special Inspections As Required, Upon Condition

a. Inspections required due to special conditions or incidents that arise requiring an immediate inspection to ensure further safe flight.

b. Hard or Overweight Landing. This inspection should be performed after a known rough landing is made or when a landing is made while the aircraft is known to exceed the design landing weight. Check the following areas and items:

☐ Wings - for wrinkled skins, loose or missing rivets.

☐ Fuel leaks around the fuel tanks.

☐ Wing spar webs, bulkheads, wing and fuselage stringers and skins for any signs of overstress or damage.

☐ A possible alignment check to clarify any doubt of damage.

c. Severe Turbulence Inspection. The same items and locations should be checked as stated for Hard or Overweight Landings along with the following:

☐ Top and bottom fuselage skins for loose or missing rivets and wrinkled skins.

☐ Empennage skins and attachments.

d. Engine over speed, sudden stoppage, loss of oil, over temperature and lightning strike.

☐ Refer to Engine Manufacturer for necessary corrective action.

CHAPTER

6

DIMENSIONS AND AREAS

CHAPTER 6 - DIMENSIONS AND AREAS

TABLE OF CONTENTS/EFFECTIVITYCHAPTER

CHAPTER SECTION	SUBJECT	GRID NO.	EFFECTIVITY
6-00-00	DIMENSIONS	1D8	July 1, 1993
6-00-00	General	1D8	July 1, 1993
6-00-00	Leading Particulars and Principal Dimensions	1D11	July 1, 1993
6-00-00	Station Reference Lines	1D14	July 1, 1993
6-00-00	Access and Inspection Provisions	1D15	July 1, 1993

DIMENSIONS AND AREAS

A. General

The principal airplane dimensions ar shown in Figure 1 (Sheet 1of 3 through sheet 3 of 3) and the leading particulars /principal dimensions are listed in chart 1 (Sheet 1of 3 through sheet 3 of 3). The airplane serial number is located on the Manufacturers aircraft Association (MAA) plate located on the left side of the fuselage at approximately F.A. 278.6. The engine serial number plate is located on the left side of the engine oil sump just below cylinder number 5.

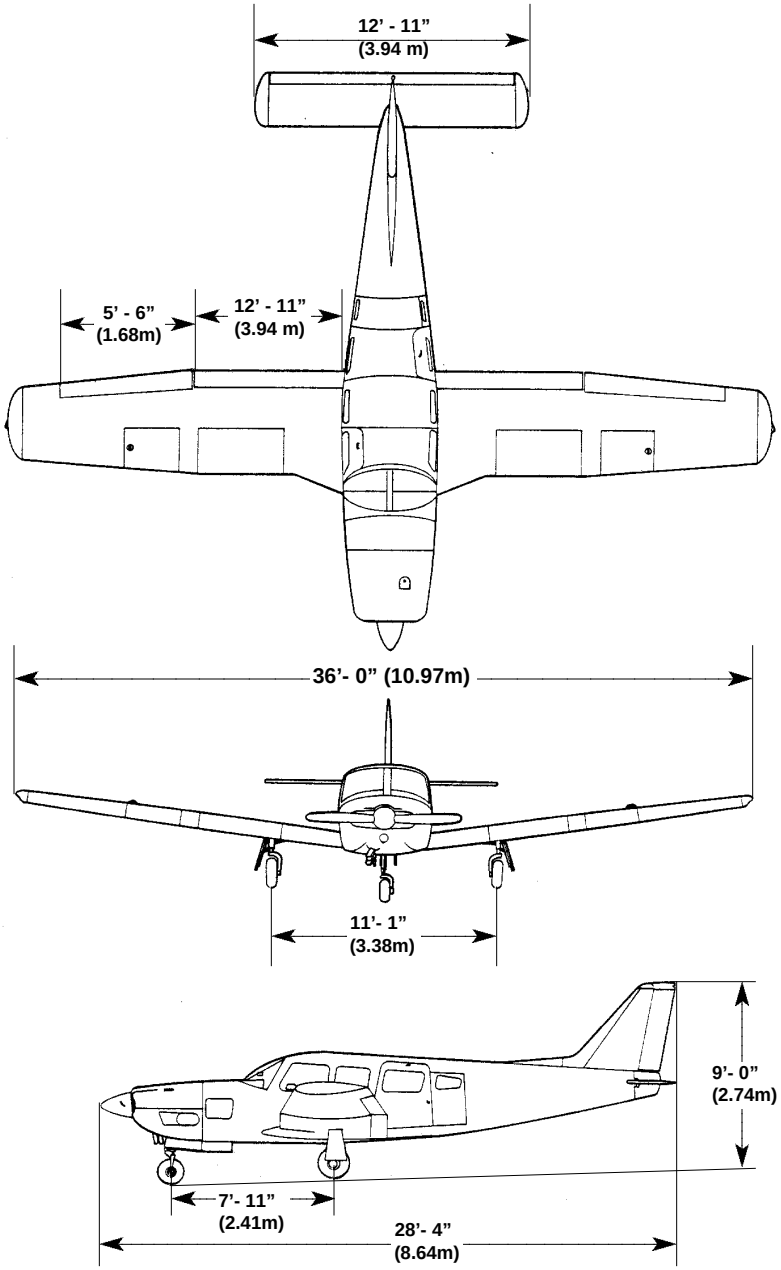

Figure 1. Three View of PA-32R-301 (Sheet 1 of 3)
Saratoga SP

DIMENSIONS AND AREAS (cont)

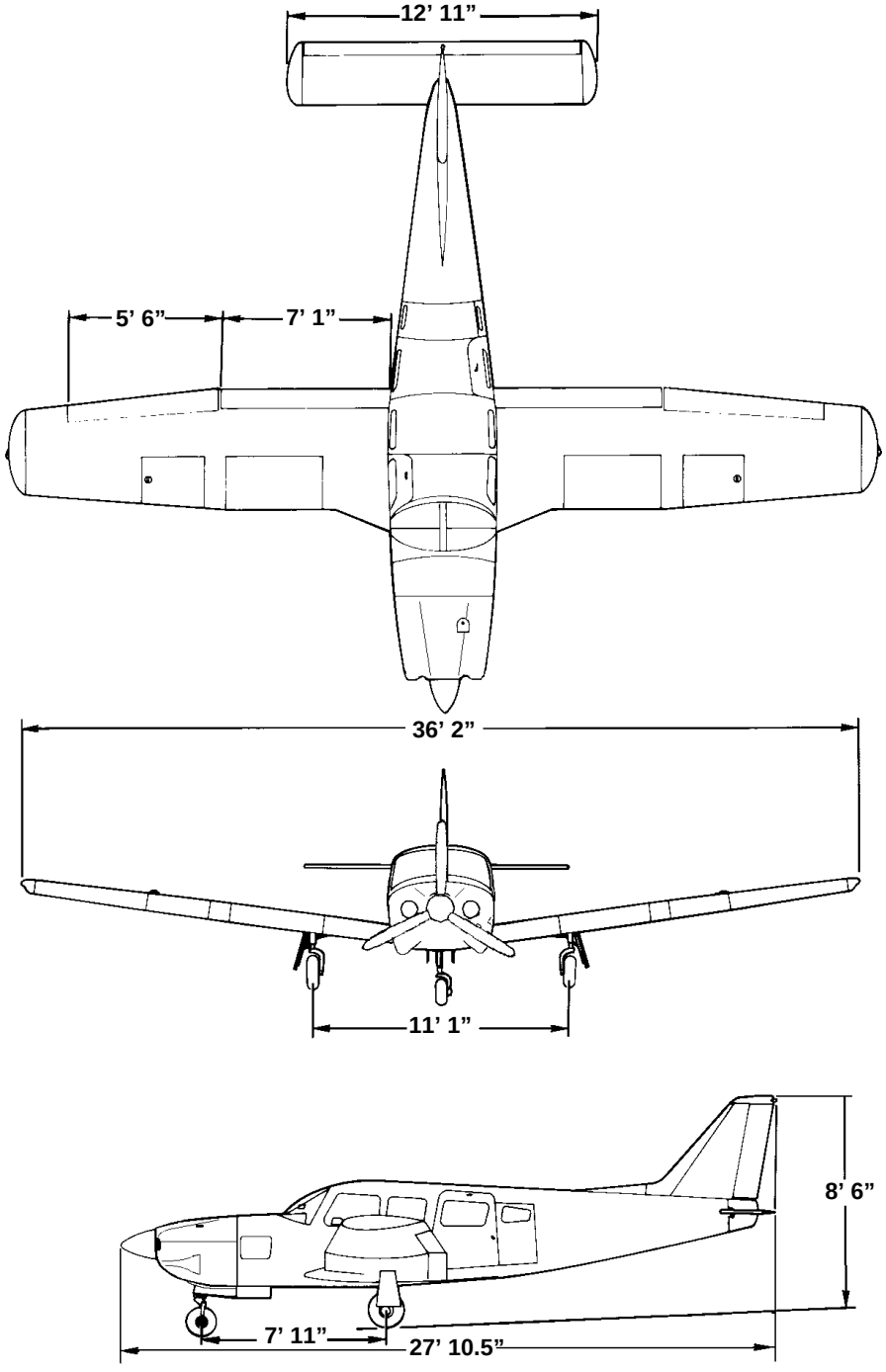

Figure 1. Three View of PA-32R-301 (Sheet 2 of 3)
Saratoga II HP

DIMENSIONS AND AREAS (cont)

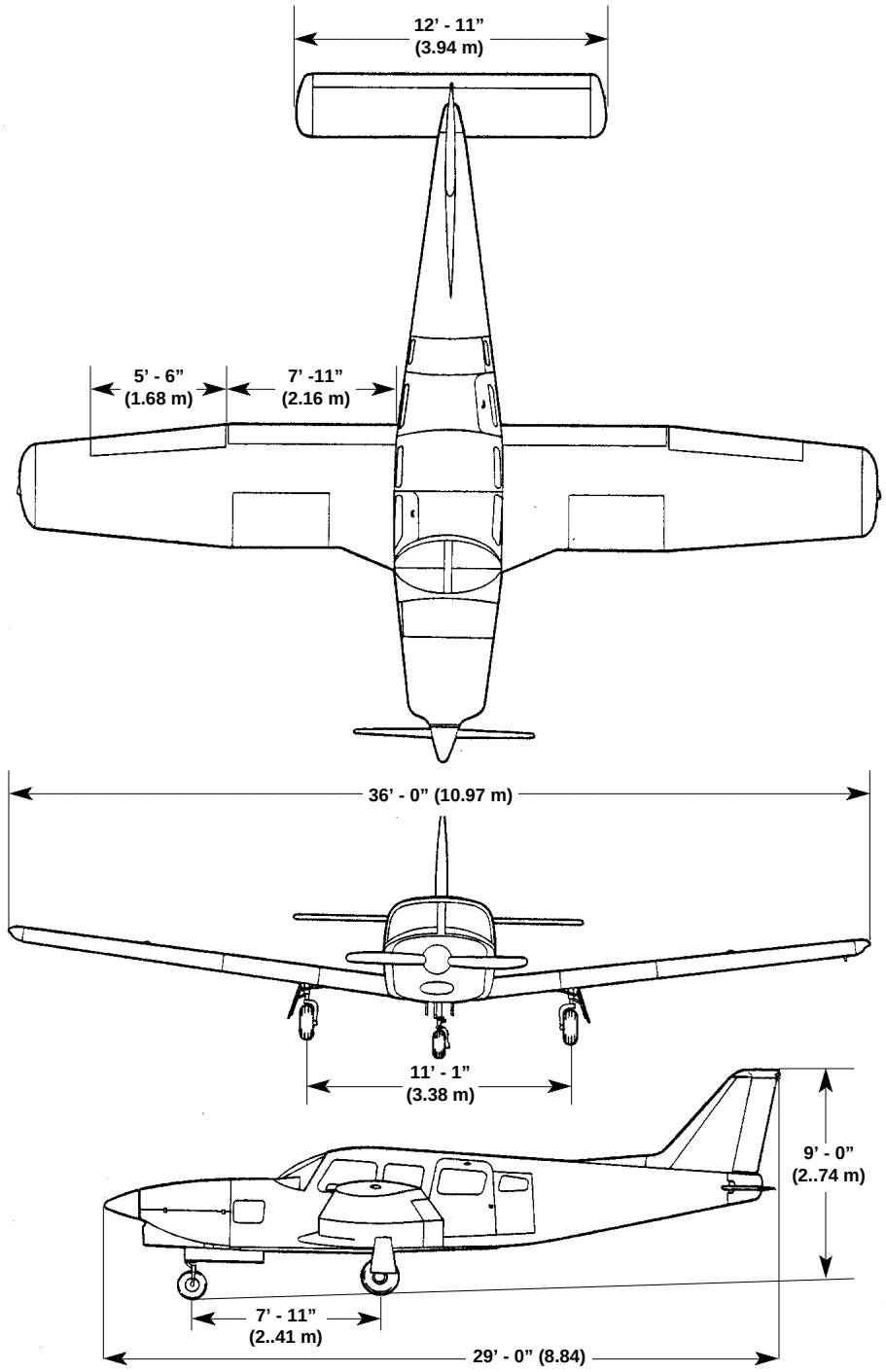

Figure 1. Three View of PA-32R-301 (Sheet 3 of 3)
Turbocharged Saratoga

B. Leading Particulars and Principal Dimensions

CHART 1 (Sheet 1 of 3)
LEADING PARTICULARS AND PRINCIPAL DIMENSIONS

MODEL	PA-32R-301	PA32R-301 II HP	PA-32R-301T
ENGINE			
Manufacturer	Avco-Lycoming	Avco-Lycoming	Avco-Lycoming
Model	IO-540-K1G5D	IO-540-K1G5	TIO-540-S1AD
Rated Horsepower and Speed	300 hp 2700 rpm	300 hp 2700 rpm	Take-off power (5 minutes max.) 300 hpat 2700 rpm at 36 in. hg. max. Continuous power 270 hp at 2575 rpm at 33 in. hg.
Oil Sump Capacity	12 U.S. quarts	12. U.S. quarts	12. U.S. quarts
Fuel, Aviation Grade (Minimum and Specified Octane)	100/130	100/130	100/130
Fuel Injector, Bendix	RSA-10ED1 or RSA-10ED2		RSA-10ED1 or RSA-10ED2
Magnetos, Bendix	D6LN-2031, 3031 (Dual Mag with impulse coupling)	Unison 6350, 6351 (Dual Mag with impulse coupling	D6LN-2031, 3000 (Dual Mag with impulse coupling
Magneto timing	20 degrees BTC	20 degrees BTC	20 degrees BTC
Magneto Point Clearance	0.016 in.	0.016 in.	0.016 in.
Spark Plugs	Refer to latest revision of Lycoming Service Instruction No. 1042.	Refer to latest revision of Lycoming Service Instruction No. 1042.	Refer to latest revision of Lycoming Service Instruction Instruction No. 1042.
Spark Plug Gap Setting	Refer to latest revision of Lycoming Service Instruction No. 1042.	Refer to latest revision of Lycoming Service Instruction No. 1042.	Refer to latest revision of Lycoming Service Instruction Instruction No. 1042.
Firing Order	1-4-5-2-3-6	1-4-5-2-3-6	1-4-5-2-3-6
StarterPrestolite 12 volt	MX4206	MX4206	MX4206

B. Leading Particulars and Principal Dimensions

CHART 1 (Sheet 2 0f 3)
LEADING PARTICULARS AND PRINCIPAL DIMENSIONS

MODEL	PA-32R-301	PA32R-301 II HP	PA-32R-301T
ENGINE (cont)			
Alternator, Standard: Prestolite	ALY-6421	Piper p/n 87415-3	ALY-6421
With Air Conditioning: Prestolite	ALY-6422	ES4003 (Electro Systems, Inc)	ALY-6422
With Prop. Deice System: Ford, 90 Amp			EOFF-10300-AA
Voltage Regulator, Lamar	B00331-2	Piper P/N 557 337	B-00331-2
Overvoltage Relay, Prestolite	FOC 4002B	FOC 4002B	FOC 4002B
PROPELLER			
Manufacturer	Hartzell	Hartzell	Hartzell
Hub Model	See Chapter 61, Chart 1	See Chapter 61, Chart 2	See Chapter 61, Chart 3
Blade Model	See Chapter 61, Chart 1	See Chapter 61, Chart 2	See Chapter 61, Chart 3
Governor Control	Hartzell	Hartzell	Hartzell
Governor Model	F-4-11BZ	V-5-4	F-4-11BZ
FUEL SYSTEM			
Fuel Tanks:	4 (2 interconnected each wing)	4 (2 interconnected each wing)	4 (2 interconnected each wing)
Capacity	53.5 U.S. gallons (each set)	53.5 U.S. gallons (each set)	53.5 U.S. gallons (each set)
Unusable Fuel	2.5 U.S. gallons (each set)	2.5 U.S. gallons (each set)	2.5 U.S. gallons (each set)
Total Capacity	107 U.S. gallons	107 U.S. gallons	107 U.S. gallons
Total Unusable Fuel	5 U.S. gallons	5 U.S. gallons	5 U.S. gallons
Electric Fuel Pump	Airborne 1B5-6	Airborne 1B5-6	Weldon (10080-B)

B. Leading Particulars and Principal Dimensions

CHART 1 (Sheet 3 0f 3)
LEADING PARTICULARS AND PRINCIPAL DIMENSIONS

MODEL	PA-32R-301	PA32R-301 II HP	PA-32R-301T
LANDING GEAR			
Type	Hydraulically Retractable	Hydraulically Retractable	Hydraulically Retractable
Shock Strut Type	Combination Air and Oil	Combination Air and Oil	Combination Air and Oil
Fluid Required (Struts and Brakes)	MIL-H-5606	MIL-H-5606	MIL-H-5606
Strut Extension (exposure under static load)			
Nose	2.75 in. ± .25 in.	2.75 in. ± .25 in.	2.75 in. ± .25 in.
Main	4.50 in. ± .50 in.	4.50 in. ± .50 in.	4.50 in. ± .50 in.
Main (Heavy Duty Wheel, Brake)	3.60 in. ± 25 in.	3.60 in. ± 25 in.	3.60 in. ± 25 in.
Wheel Base	7 ft., 11 in.	7 ft., 11 in.	7 ft., 11 in.
Nose Wheel Travel	22.5˚ ± 2˚ Left and Right	22.5˚ ± 2˚ Left and Right	22.5˚ ± 2˚ Left and Right
Turning Distance (Min.)	75 ft., 6 in.	75 ft., 6 in.	75 ft., 6 in.
Wheel, Nose, McCauley D-30500	Cleveland 40-77B or McCauley D-30500	Cleveland 40-77B or McCauley D-30500	Cleveland 40-77B or
Wheel, Main,			
Standard	Cleveland 40-90C	Cleveland 40-90C	Cleveland 40-90C
Heavy Duty	Cleveland 40-120	Cleveland 40-120	Cleveland 40-120
Brake Type,			
Standard	Cleveland 30-65	Cleveland 30-65	Cleveland 30-65
Heavy Duty	Cleveland 30-83	Cleveland 30-83	Cleveland 30-83
Tire, Nose Type III	5:00 x 5, 6 ply, Type III	5:00 x 5, 6 ply, Type III	5:00 x 5, 6 ply,
Tire, Main,			
Standard 8 ply	McCreary 6:00 x 6, 8 ply	McCreary 6:00 x 6, 8 ply	McCreary 6:00 x 6,
Heavy Duty) 6:00 x 6, 8 ply	B.F. Goodrich 6:00 x 6, 8 ply	B.F. Goodrich 6:00 x 6, 8 ply	B.F. Goodrich
Tire Pressure,			
Nose 35 psi	35 psi	35 psi	
Tire Pressure, Main			
Standard	38 psi	38 psi	38 psi
Heavy Duty	50 psi	50 psi	50 psi

C. Station Reference Lines

To locate various airplane components that require maintenance and servicing, a method utilizing fuselage station, wing station, buttock line and waterline designations is frequently employed in this manual . Fuselage stations (F.S.), wing station, (W.S.) buttock lines (B.L.), and water lines (W.L.) are reference points measured by inches in the vertical or horizontal direction from a given reference line which indicates station locations of structural members of the airplane. F.S. 0 is 78.4 inches ahead of the wing leading edge; B.L. 0 is the centerline of the airplane; and W.L. 0 is 20.5 inches below the cabin floor as measured at the rear wing spar with the airplane level. The reference datum line is located 78.4 inches ahead of the wing leading edge at the intersection of the straight and tapered section.

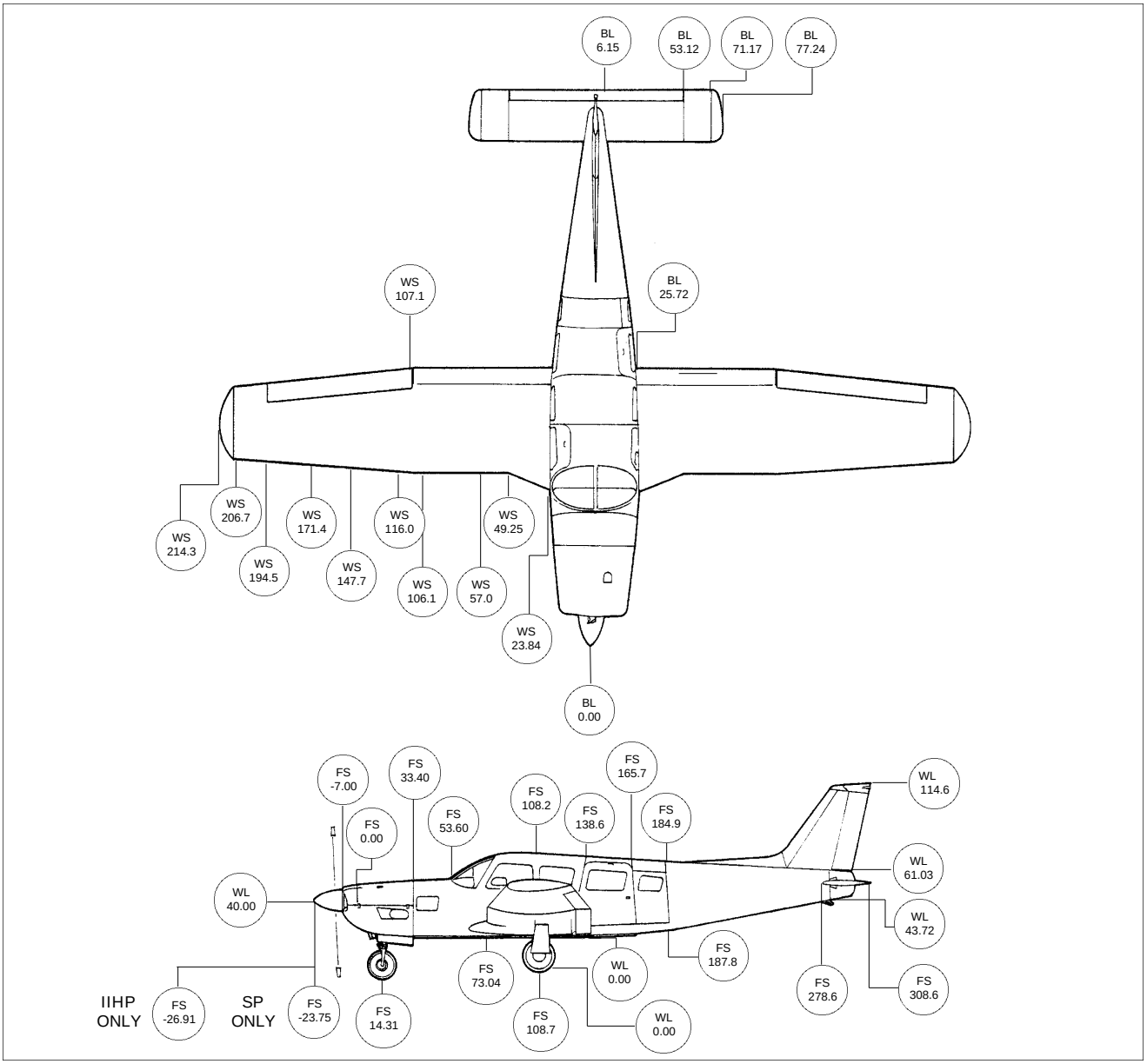

Station Reference
Figure 2

D. Access And Inspection Provisions

The access and inspection provisions for the airplane are shown in Figure 3. The component to be serviced or inspected through each opening is identified in the illustration. All access plates and panels are secured by either metal fasteners or screws. To enter the aft section of the fuselage, remove the rear trim panel.

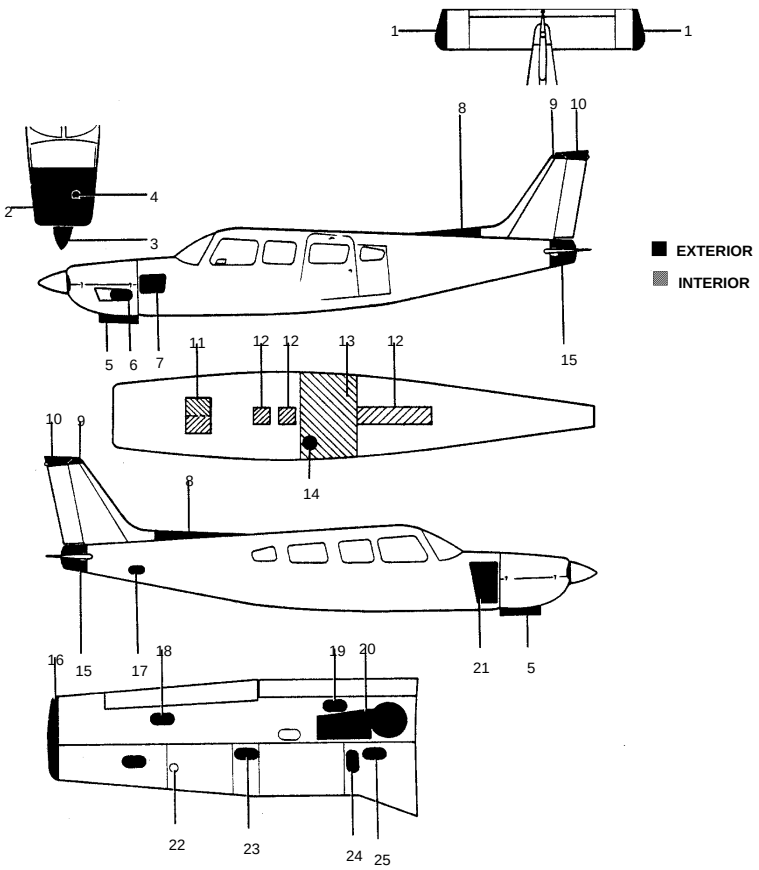

1. TIP, STABILATOR
2. COWL, ENGINE ACCESS
3- SPINNER, PROPELLER
4. DOOR, OIL FILLER
5. DOOR,NOSE GEAR
6. COVER, AIR FILTER
7. COVER, HYDRAULIC RESERVOIR & BATTERY SERVICE
8. FAIRING, ACCESS
9. TIP, VERTICAL STABILIZER
10. TIP, RUDDER
11. PANEL, BATTERY & HYDRAULIC
12. PLATES, TUNNEL ACCESS
13. PANEL, FLOOR
14. COVER, FUEL SELECTOR FILTER
15. TAIL CONE, CONTROL CABLES & TRIM SCREW
16. WING TIP
17. COVER, E.L.T. ACCESS
18. COVER, AILERON BELLCRANK ACCESS
19. COVER, GEAR ATTACHMENT FITTING
20. DOOR, MAIN GEAR
21. DOOR, BAGGAGE
22. CAP FUEL FITTING
23. COVER, FUEL FITTING
24. COVER, FUEL AND BRAKE FITTINGS
25. COVER, FUEL FITTINGS

Figure 3
Access Plates and Panels

GRIDS 1D16 THROUGH 1D20
INTENTIONALLY LEFT BLANK

CHAPTER

7

LIFTING AND SHORING

CHAPTER 7 - LIFTING AND SHORING

TABLE OF CONTENTS/EFFECTIVITY

CHAPTER SECTION	SUBJECT	GRID NO.	EFFECTIVITY
7-10-00	JACKING	1D23	July 1, 1993

LIFTING AND SHORING

A. General

Jacking the airplane is necessary to service the landing gear and other operations. The jacking operation can be performed by using tripod jacks; in other situations (emergency, post-accident lifting), slings ar airbags should be used.

If wing or fuselage shoring is required, make sure the support is contoured to conform with the surface it is supporting.

B. Jacking

1. Align jacks under the wing respective pads on the wing front spar.

— CAUTION —

Be sure to apply sufficient support ballast. Otherwise, the airplane will slip forward and fall on the fuselage nose section.

2. Attach a tail stand with approximately 300 pounds ballast to tail skid.

— CAUTION —

If the purpose for placing the airplane on jacks is to service the hydraulic system, the free-fall valve knob should be pulled full out from the instrument panel.

3. Carefully raise jacks until all three wheels are clear of the surface.

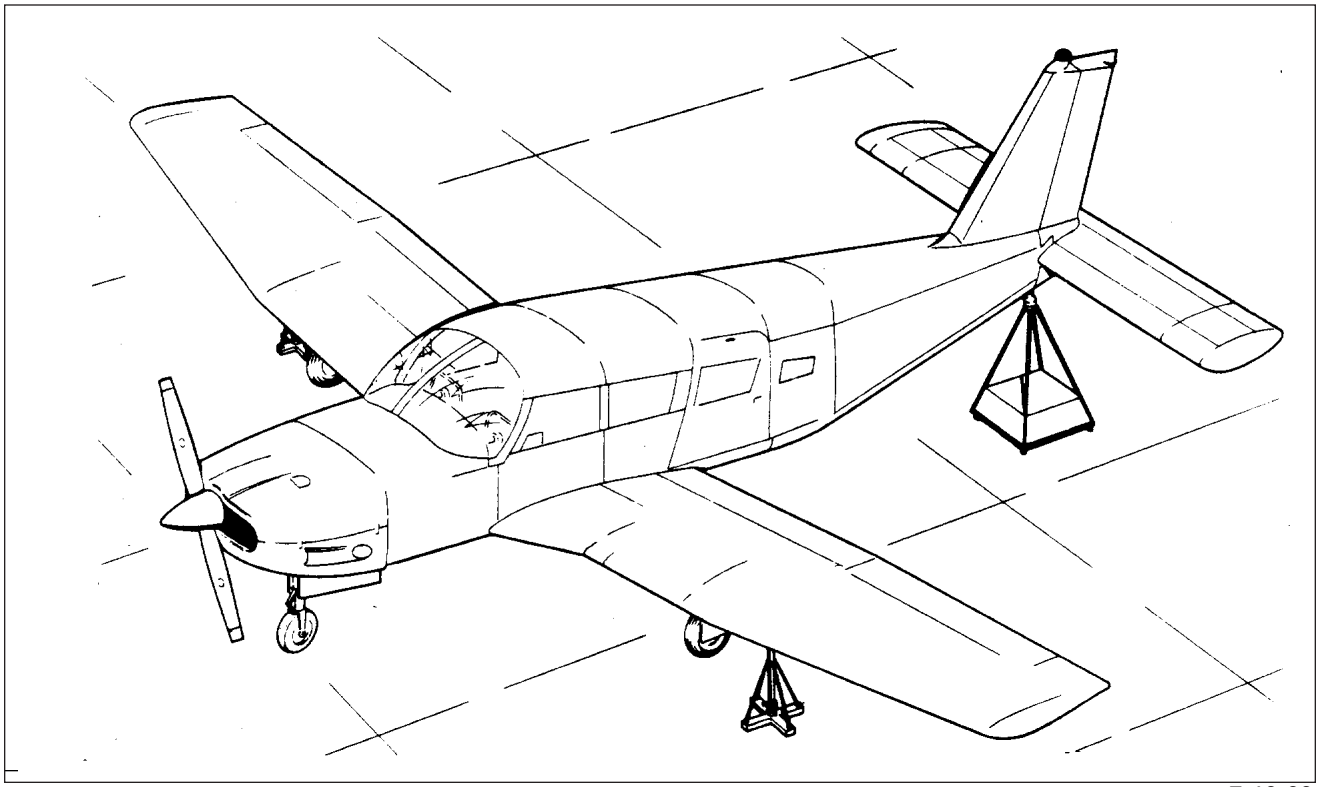

INTENTIONALLY LEFT BLANK

CHAPTER

8

LEVELING AND WEIGHING

CHAPTER 8 - LEVELING AND WEIGHING

TABLE OF CONTENTS/EFFECTIVITY

CHAPTER SECTION	SUBJECT	GRID NO.	EFFECTIVITY
8-10-00	LEVELING	1E3	July 1, 1993
8-20-00	WEIGHING	1E4	July 1, 1993

A. LEVELING

All configurations of the airplane are provided with a means for longitudinal and lateral leveling. The airplane may be leveled while on jacks, during the weighing procedure while the wheels are on scales, or while the wheels are on the ground. To level the airplane for purposes of weighing or rigging, the following procedures may be used:

(1) To longitudinally level the airplane, partially withdraw the two leveling screws located immediately below the left front side window. (Refer to Figure 1.) Place a spirit level on these screw heads and deflate the nose wheel tire or adjust the jacks until the bubble of the level is centered.

(2) To laterally level the airplane, place a spirit level across the baggage compartment floor along the rear bulkhead (refer to Figure 1) and deflate the tire on the high side of the airplane or adjust either jack until the bubble of the level is centered.

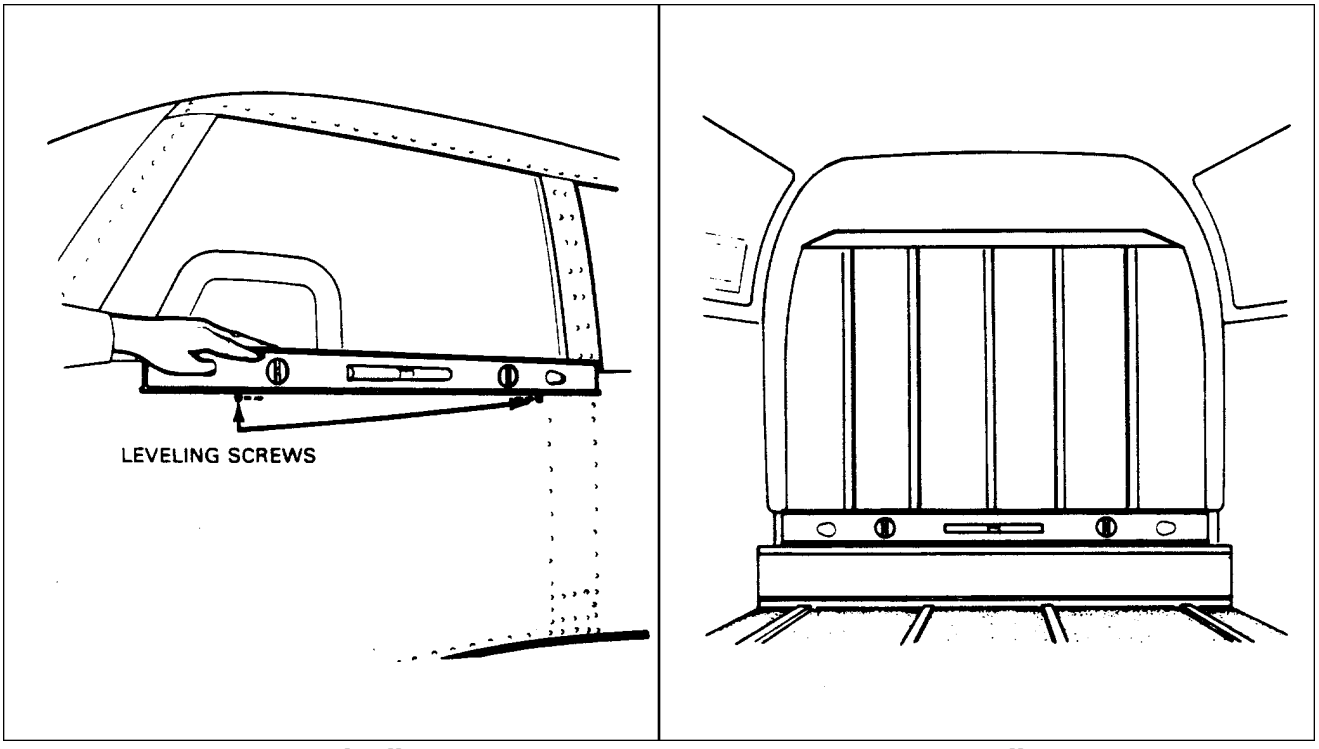

Longitudinally Laterally

Leveling Airplane
Figure 1

B. WEIGHING. (REFER TO FIGURE 8-2.)

The airplane may be weighed by the following procedure:

(1) Position a scale and ramp in front of each of the three wheels.

(2) Secure the scales from rolling forward and tow the airplane up onto the scales. (Refer to Towing, Chapter 9.)

(3) Remove the ramp so as not to interfere with the scales.

(4) If the airplane is to be weighed for weight and balance computations, level the airplane.

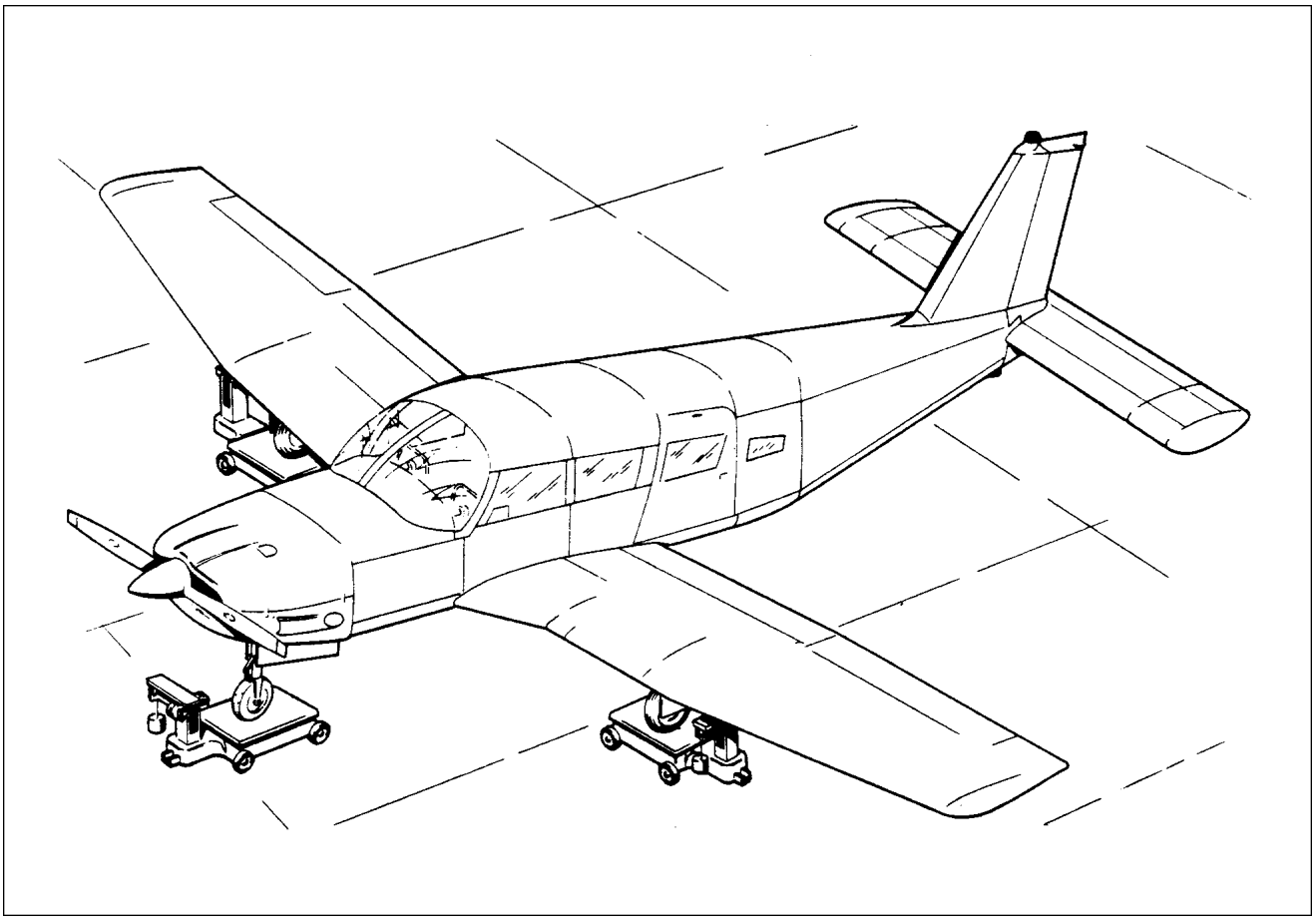

Weighing
Figure 2

CHAPTER

9

TOWING AND TAXIING

CHAPTER 9 - TOWING AND TAXIING

TABLE OF CONTENTS/EFFECTIVITY

CHAPTER SECTION	SUBJECT	GRID NO.	EFFECTIVITY
9-10-00	TOWING	1E7	July 1, 1993
9-20-00	TAXIING	1E8	July 1, 1993

A TOWING

— CAUTION —

When towing with power equipment, do not turn the nose gear in either direction beyond its steering radius limits as this will result in damage to the nose gear and steering mechanism. When moving the aircraft forward by hand, avoid pushing on the trailing edge of the ailerons as this will cause the aileron contour to change resulting in an out-of-trim condition.

The airplane may be moved by using the nose wheel steering bar that is stowed below the forward ledge of the rear baggage compartment or by using power equipment that will not damage or cause excess strain to the nose gear steering assembly. Tow bar engages front axle inside fork.

In the event towing lines are necessary, lines (rope) should be attached to both main gear struts as high up on the tubes as possible. Lines should be long enough to clear the nose and/or tail by not less than 15 feet, and a qualified person to ride in the pilot's seat to maintain control by use of the brakes.

B. TAXIING

Before attempting to taxi the airplane, ground personnel should be checked out by a qualified pilot or other responsible person. Engine starting and shutdown procedures should be covered as well. When it is ascertained that the propeller back blast and taxi areas are clear, apply power to start the taxi roll and perform the following checks:

1. Taxi forward a few feet and apply brakes to determine their effectiveness.
2. Taxi with propellers set in low pitch, high rpm setting.
3. While taxiing, make slight turns to ascertain the effectiveness of steering.
4. Observe wing clearances when taxiing near buildings or other stationary objects. If possible, station an individual outside the airplane as an observer.
5. When taxiing on uneven ground, look for and avoid holes and ruts.
6. Do not operate the engine at high rpm during run up or taxiing over ground containing loose stones, gravel, or any loose material that may cause damage to the propeller blades.

CHAPTER

10

PARKING AND MOORING

CHAPTER 10 - PARKING AND MOORING

TABLE OF CONTENTS/EFFECTIVITY

CHAPTER SECTION	SUBJECT	GRID NO.	EFFECTIVITY
10-10-00	PARKING AND MOORING	1E11	July 1, 1993
10-10-00	Parking	1E11	July 1, 1993
10-10-00	Locking Airplane	1E11	July 1, 1993
10-20-00	Mooring	1E12	July 1, 1993

PARKING. AND MOORING

A. Parking.

When parking the airplane, insure that it is sufficiently protected against adverse weather conditions and presents no danger to other aircraft. When parking the airplane for any length of time or overnight, it is recommended that it be moored.

1. To park the airplane, head it into the wind, if possible.
2. Set the parking brake by pulling back the brake lever and depressing the knob attached to the left side of the handle. The release the handle. To release the parking brakes, pull back on the brake lever to disengage the catch mechanism. Then allow the handle to swing forward.

— NOTE —

Care should be taken when setting brakes that are overheated or during cold weather when accumulated moisture may freeze the brakes.

3. The aileron and stabilator controls may be secured with the pilot's seat belt.

B. Locking Airplane.

The right front cabin door, left aft cabin door and the nose baggage compartment door are provided with a key lock on the outside. All doors and the locking gas cap (optional) use the same key.

PARKING. AND MOORING (cont.)

C. Mooring

— CAUTION —

When mooring, use square or bowline knots. Do not use slip knots.

The airplane is moored to insure its immovability, protection, and security under various weather conditions. The following procedure gives the instructions for proper mooring of the airplane:

(1) Head the airplane into the wind, if possible.

(2) Block the wheels.

(3) Lock the aileron and stabilator controls by looping the pilot's seat belt around wheel.

CAUTION

When using rope constructed of non-synthetic material, leave sufficient slack to avoid damage to the airplane when the ropes contract due to moisture.

(4) Secure tie-down ropes to the wing tie-down rings and the tail skid at approximately 45 degree angles to the ground.

— NOTE —

Additional preparations for high winds include using tie-down ropes from the landing gear forks, and securing the rudder.

CHAPTER

11

REQUIRED PLACARDS

CHAPTER 11 - REQUIRED PLACARDS

TABLE OF CONTENTS/EFFECTIVITY

CHAPTER SECTION	SUBJECT	GRID NO.	EFFECTIVITY
11-20-00	Exterior Plarcards and Markings	1E15	July 1, 1993
11-30-00	Interior Plarcards and Markings	1E19	July 1, 1993

REQUIRED PLACARDS

A. Exterior Placards and Markings (PA-32R-301 and PA-32R-301T)

The airplane nameplate placard is located on the left side of the fuselage near the stabilator leading edge at approximately F.S. 278.60. The placard identifies the airplane by its model number and serial number. Should a question arise concerning the care of the airplane, it is important to include the airplane serial number in any correspondence to Piper Aircraft Corporation.

—NOTE —

Any time an airplane is repainted or touched up, inspect all placards to ensure that they are not covered with paint, are legible, and securely attached.

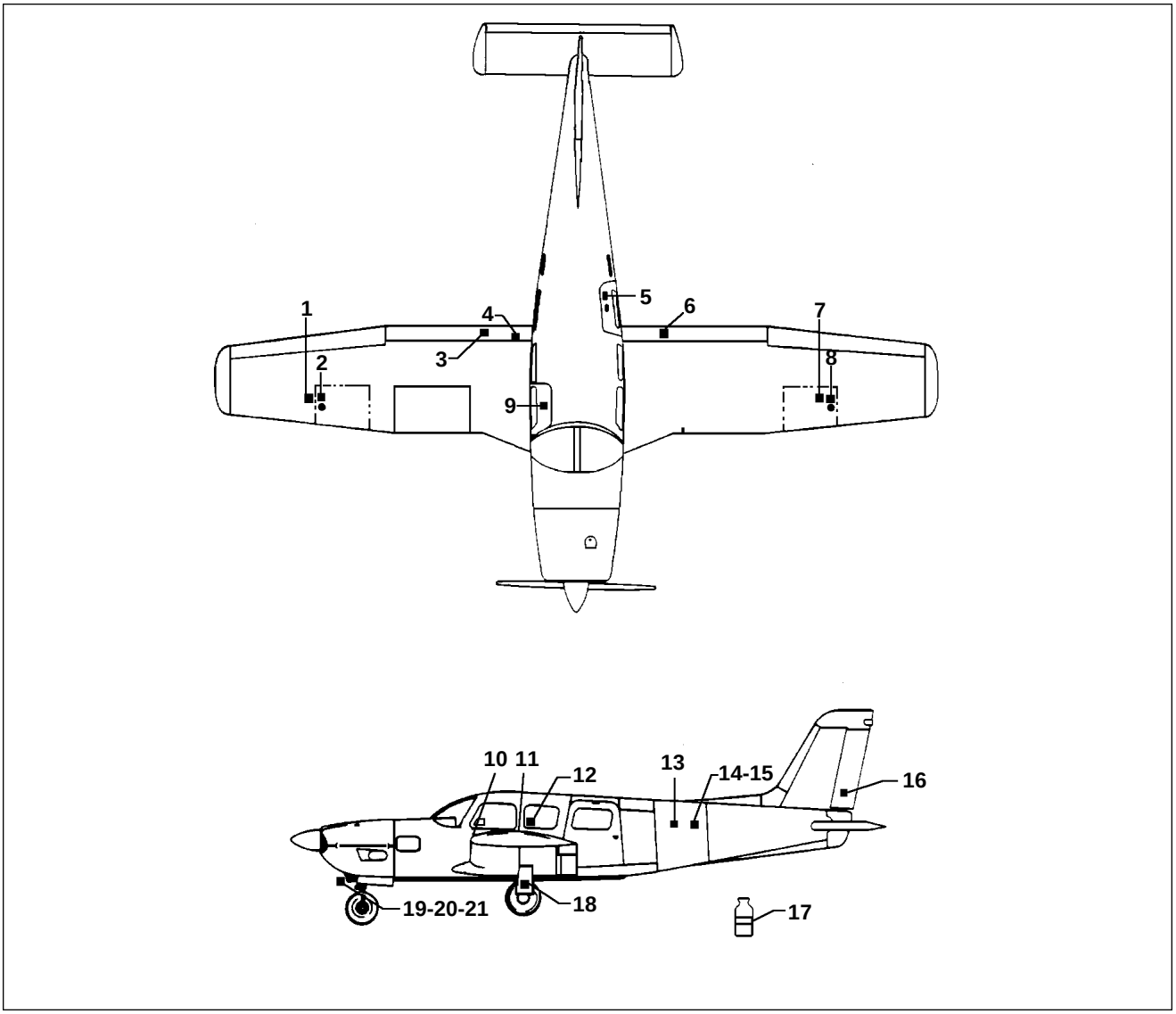

Exterior Placards and Markings (PA-32R-301 SP and PA-32R-301T SP)
Figure 1 (Sheet 1 of 2)

REQUIRED PLACARDS (cont.)

B. Exterior Placards and Markings Callouts (PA-32R-301 and PA-32R-301T)

1. DECAL - AVGAS
2. PLACARD - AVIATION FUEL, GRADE
3. PLACARD - NO STEP
4. PLACARD - FLAP WARNING
5. PLACARD - DOOR RELEASE
6. PLACARD - NO STEP
7. DECAL - AVGAS
8. PLACARD - AVIATION FUEL, GRADE
9. PLACARD - DOOR RELEASE
10. PLACARD - LIFT DETECTOR
11. PLACARD - LEVEL POINTS
12. PLACARD - PIPER-AIRE
13. NAMEPLATE - PIPER SARATOGA SP
14. PLACARD - ELT LOCATION (RIGHT SIDE)
15. PLACARD - EXTERNAL POWER (LEFT SIDE)
16. PLACARD - DO NOT PUSH
17. PLACARD - FUEL CHECK BOTTLE
18. PLACARD - OLEO SERVICE INSTRUCTIONS
19. PLACARD - OLEO SERVICE INSTRUCTIONS
20. PLACARD - TURN LIMIT
21. PLACARD - TURN LIMIT CENTER MARK

Exterior Placards and Markings (PA-32R-301 and PA-32R-301T)
Figure 1 (Sheet 2 of 2)

REQUIRED PLACARDS (cont.)

C. Exterior Placards and Markings (PA-32R-301 II HP)

The airplane nameplate placard is located on the left side of the fuselage near the stabilator leading edge at approximately F.S. 278.60. The placard identifies the airplane by its model number and serial number. Should a question arise concerning the care of the airplane, it is important to include the airplane serial number in any correspondence to Piper Aircraft Corporation.

—NOTE —

Any time an airplane is repainted or touched up, inspect all placards to ensure that they are not covered with paint, are legible, and securely attached.

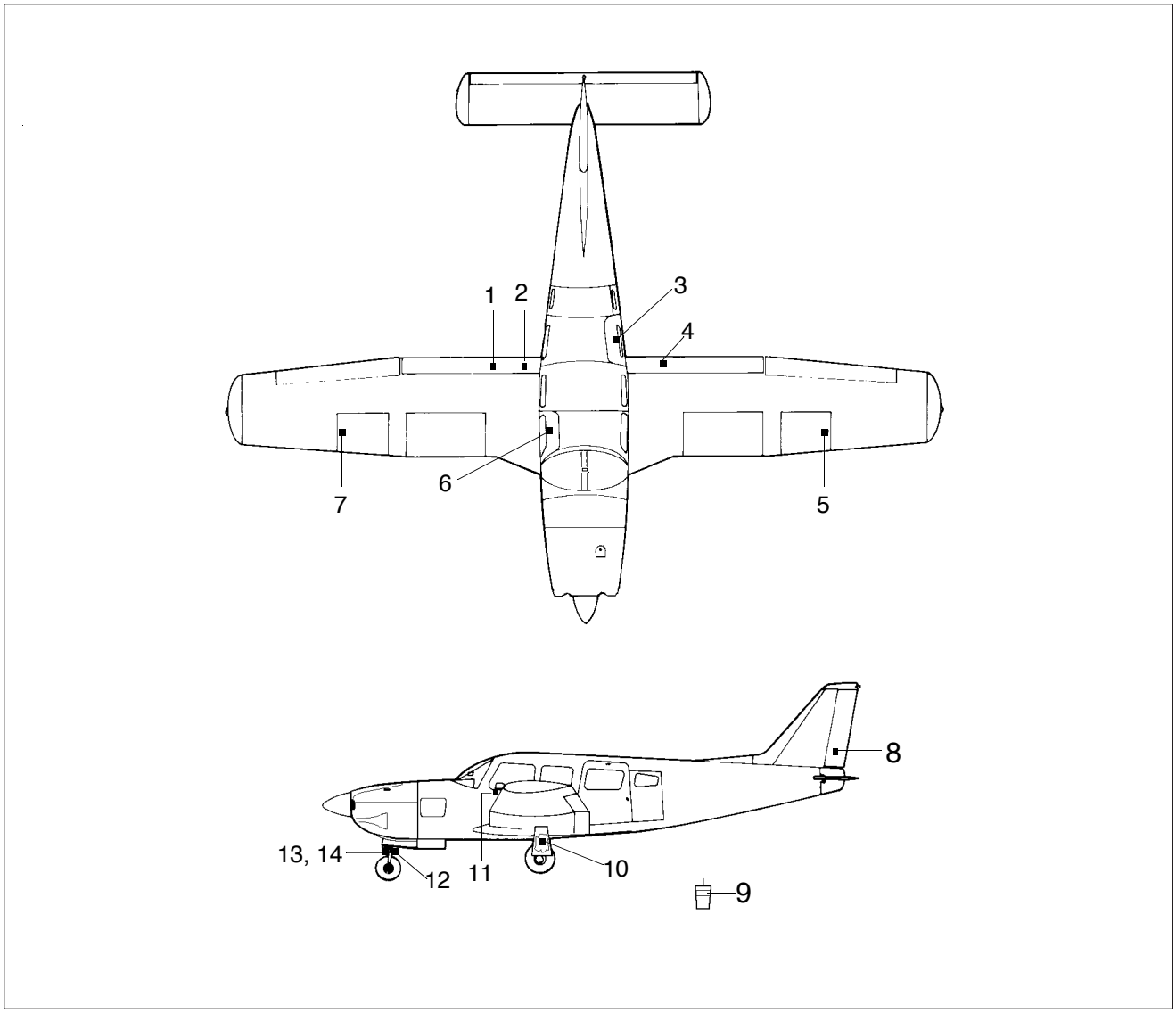

Exterior Placards and Markings (PA-32R-301 II HP)
Figure 2 (Sheet 1 of 2)

REQUIRED PLACARDS (cont.)

B. Exterior Placards and Markings Callouts

1. PLACARD - NO STEP
2, PLACARD - FLAP STEP UNSAFE
3. PLACARD - DOOR RELEASE
4. PLACARD - NO STEP
5. PLACARD - AVGAS ONLY
6. PLACARD - DOOR RELEASE
7. PLACARD - AVGAS ONLY
8. PLACARD - DO NOT PUSH
9. PLACARD - FUEL CHECK BOTTLE
10. PLACARD - OLEO SERVICE INSTRUCTIONS
11. PLACARD - LEVEL POINT
12. PLACARD - OLEO SERVICE INSTRUCTIONS
13. PLACARD - TURN LIMIT
14. PLACARD - TURN LIMIT CENTER MARK

Exterior Placards and Markings (PA-32R-301 II HP)
Figure 2 (Sheet 2 of 2)

REQUIRED PLACARDS

A. Interior Placards and Markings (PA-32R-301 and PA-32R-301T)

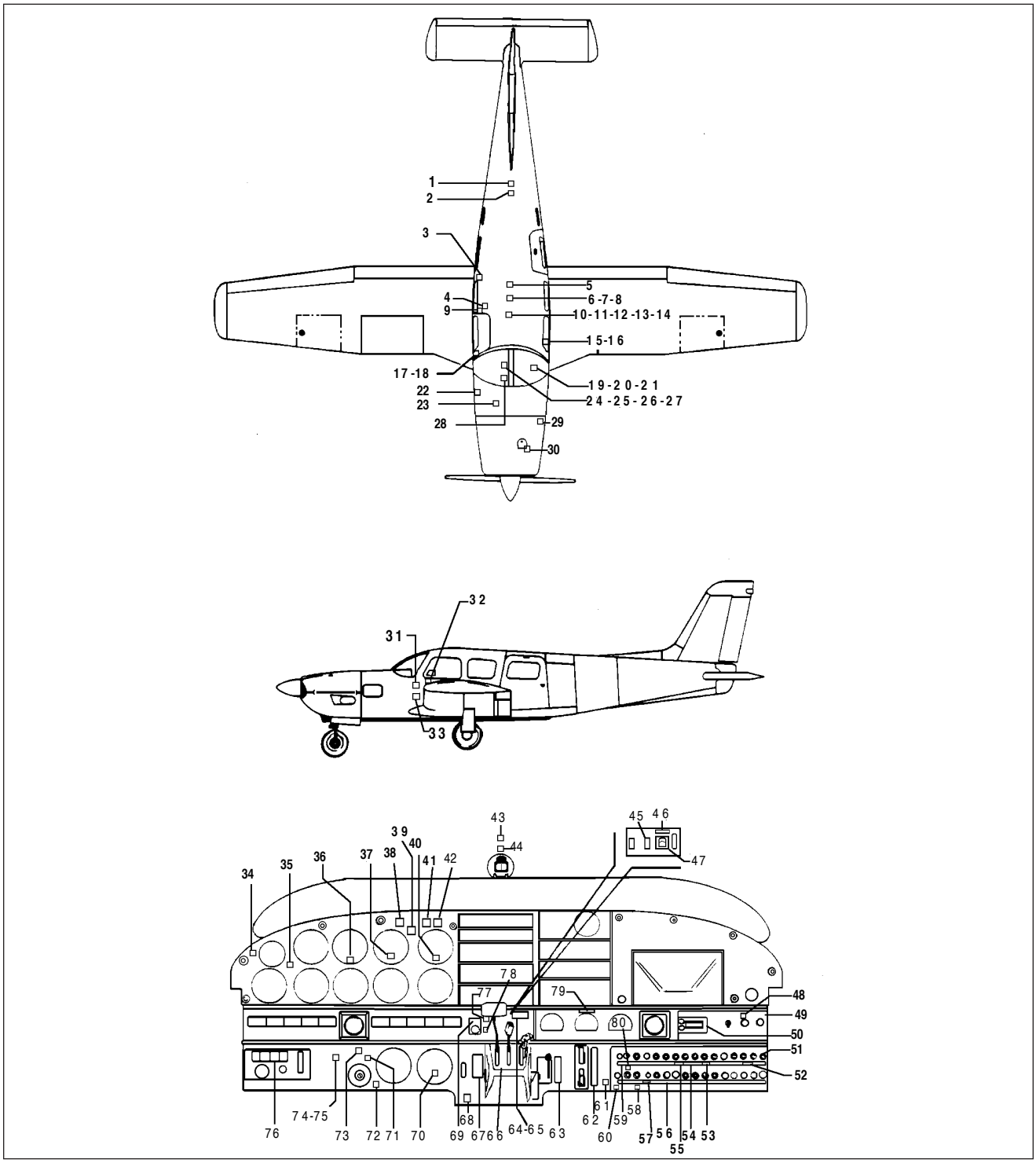

Interior Placards and Markings (PA-32R-301 and PA-32R-301T)
Figure3 (Sheet 1 of 3)

REQUIRED PLACARDS (cont.)

B. Interior Placards and Markings Callouts (PA-32R-301 and PA-32R-301T)

1. PLACARD - SOFT WEAR ONLY
2. PLACARD - BAGGAGE LIMITATIONS, AFT
3. PLACARD - TABLE STOWAGE
4. PLACARD - SUMP DRAIN
5. PLACARD - OXYGEN BOTTLE INSTALLATiON
6. PLACARD - CABIN AIR
7. PLACARD - OXYGEN GAUGE LIGHT
8. PLACARD - OXYGEN “PULL ON”
9. MEDALLION - PIPER LOGO
10 PLACARD - EMERGENCY GEAR LEVER
11 PLACARD - GEAR OVERRIDE LATCH
12. PLACARD - OVERRIDE INSTRUCTIONS
13. PLACARD - STABILATOR TRIM
14. PLACARD - FLAP LEVER
15 PLACARD - STORM WINDOW
16. PLACARD - OPERATING LIMITATIONS
17. PLACARD - OPEN
18. PLACARD - LATCH
19. MEDALLION - PIPER, CONTROL WHEEL
20. PLACARD - A/P INTR
21 PLACARD - TRANSPONDER IDENTIFIER
22. PLACARD - LIGHT SWITCH
23. PLACARD - BAGGAGE LIMITATIONS, FORWARD
24. PLACARD - RUDDER TRIM
25. PLACARD - FUEL SELECTOR
26. PLACARD - “FUEL”
27. PLACARD - GO AROUND
28. PLACARD - STROBE LIGHT WARNING
29. PLACARD - HYDRAULIC FLUID SPEC
30. PLACARD - OIL SPEC
31. PLACARD - WARNING, ELT
32. PLACARD - STROBE LIGHT OPERATING
33. PLACARD - PITOT DRAIN
34. PLACARD - RADAR ALTIMETER ‘’ON-OFF’’
35. PLACARD - DEMONSTRATED CROSSWIND
36. PLACARD - CONDUCT TRIM CHECK
37. PLACARD - ALTITUDE REPORTER INSTALLED
38 PLACARD - PRESS TO TEST
39. PLACARD - AIR CONDITION DOOR LIGHT
40. PLACARD - WARNING

Interior Placards and Markings (PA-32R-301 and PA-32R-301T)
Figure 3 (Sheet 2 of 3)

REQUIRED PLACARDS (cont.)

B. Interior Placards and Markings Callouts (PA-32R-301 and PA-32R-301T)

41. PLACARD - GLIDE SLOPE COUPLER
42. PLACARD - RADAR ALTIMETER ‘’OFF FOR TAKEOFF’’
43. PLACARD - COMPASS DEVIATION
44. PLACARD - COMPASS DEVIATION
45. PLACARD - PROP HEAT
46. PLACARD - WARNING
47. PLACARD - PROP HEAT AMPS
48. PLACARD - VENT FAN CONTROL
49. PLACARD - AIR CONDITIONING CONTROL PANEL
50. PLACARD - HEATER AND DEFROST (LIFT TO ACTUATE)
51. PLACARD - RADAR ALTIMETER
52. PLACARD - LANDING AND RECOGNITION LIGHTS
53. PLACARD - RADAR
54. PLACARD - CIRCUIT BREAKER PANEL
55. PLACARD - COMPASS SYSTEM
56. PLACARD - CIRCUIT BREAKER PANEL
57. PLACARD - AUTOPILOT
58. PLACARD - ICE LIGHT
59. PLACARD - PROP DEICE
60. PLACARD - SURFACE BOOTS
61. PLACARD - EMERGENCY BUS SWITCH
62. PLACARD - NAVIGATION AND INSTRUMENT LIGHTS
63. PLACARD - ALTERNATE AIR
64. PLACARD - ALTITUDE LEANING
65. PLACARD - WINDSHIELD PANEL HEAT
66. PLACARD - CONTROL QUADRANT
67. PLACARD - GEAR “UP-DOWN,” SPEED
68. PLACARD - MIKE JACK
69. PLACARD - AIR CONDITION DOOR LIGHT
70. PLACARD - REDUCE POWER
71. PLACARD - PITCH TRIM
72. PLACARD - OMNI COUPLER SWITCH
73. PLACARD - PITCH TRIM
74. PLACARD - NAV 1 OFF NAV 2
75. PLACARD - NAV 1 NAV 2
76. PLACARD - AUTOFLITE II
77. PLACARD - ON
78. PLACARD - OFF WING ICE LIGHT
79. PLACARD - ALTITUDE LEANING LIMITATIONS
80. PLACARD - LIFT DETECTOR HEAT

Interior Placards and Markings (PA-32R-301 and PA-32R-301T)
Figure 3 (Sheet 3 of 3)

REQUIRED PLACARDS

C. Interior Placards and Markings (PA-32R-301 II HP)

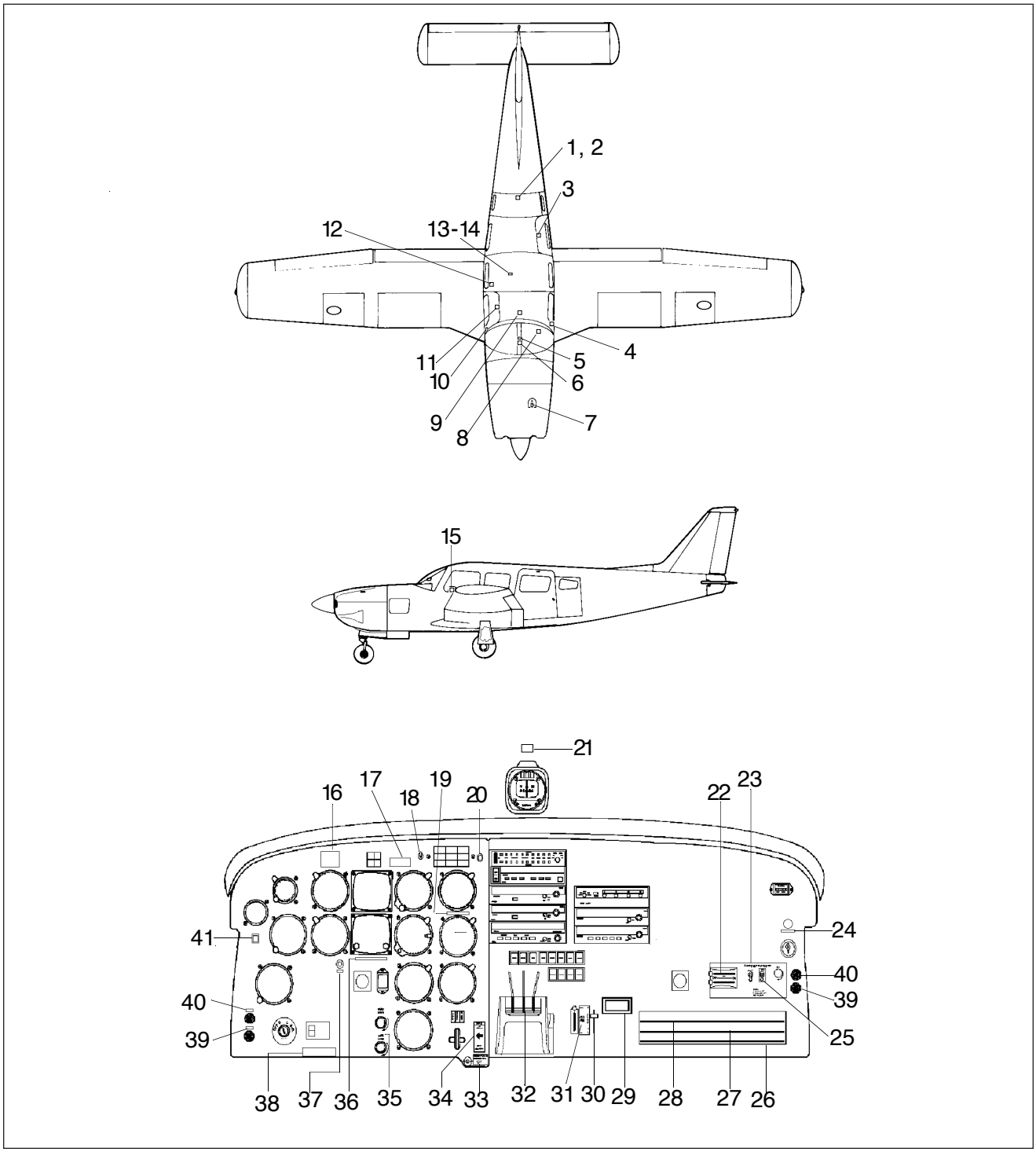

Interior Placards and Markings (PA-32R-301 II HP)
Figure 4 (Sheet 1 of 2)

REQUIRED PLACARDS (cont.)

D. Interior Placards and Markings Callouts (PA-32R-301 II HP)

1. PLACARD - MAXIMUM BAGGAGE
2. PLACARD - SOFT WEAR ONLY
3. PLACARD - ENGAGE LATCH
4. PLACARD - AIRPLANE OPERATING CATEGORY
5. PLACARD - FUEL SELECTOR
6. PLACARD - NOSE L - R
7. PLACARD - OIL GRADE
8. PLACARD - MAXIMUM BAGGAGE
9. PLACARD - STABILATOR TRIM
10. PLACARD - OPEN
11. PLACARD - ENGAGE LATCH
12. PLACARD - FUEL SUMP DRAIN
13. PLACARD - STOW TABLE
14. PLACARD - TABLE - MAX. WT.
15. PLACARD - STORM WINDOW
16. PLACARD - DEMONSTRATED X-WIND
17 PLATE - (N ·····)
18. PLACARD - DAY-NIGHT
19. PLACARD - DO NOT EXCEED - MANIFOLD PRESSURE
20. PLACARD - PRESS TO TEST
21. PLACARD - COMPASS DEVIATION
22. PLACARD - HEAT-DEF - ON OFF
23. PLACARD - CLIMATE CONTROL CENTER
24. PLACARD - KLN 90 DATA LOADER
25. PLACARD - FAN - HI LOW OFF
26. PLACARD - CIRCUIT BREAKER PANEL
27. PLACARD - CIRCUIT BREAKER PANEL
28. PLACARD - CIRCUIT BREAKER PANEL
29. PLACARD - ALTERNATOR AMPS
30. PLACARD - FLAP LEVER
31. PLACARD - ALT AIR - OPEN CLOSE
32. PLACARD - CONTROL QUADRANT
33. PLACARD - EMERGENCY GEAR EXTENSION
34. PLACARD - GEAR UP - DOWN SPEEDS
35. PLACARD - SWITCH LIGHTS - PANEL LIGHTS
36. PLACARD - PLACARD - GPS LIMITED TO VFR ONLY
37. PLACARD - GPS
38. PLACARD - ALTERNATE STATIC SOURCE
39. PLACARD - MIKE
40. PLACARD - PHONE
41. PLACARD - CAUTION - BEFORE USING AUX PUMP
    PLACARD - AUX VAC
    PLACARD - PUSH ON - OFF

Interior Placards and Markings (PA-32R-301 II HP)
Figure 4 (Sheet 2 of 2)

THIS PAGE INTENTIONALLY LEFT BLANK

CHAPTER

12

SERVICING

CHAPTER 12 - SERVICING

TABLE OF CONTENTS/EFFECTIVITY

CHAPTER SECTION	SUBJECT	GRID NO.	EFFECTIVITY
12-00-00	SERVICING	1F4	July 1, 1993
12-00-00	General	1F4	July 1, 1993
12-00-00	Engine Cleaning	1F4	July 1, 1993
12-00-00	Aircraft Finish Care	1F4	July 1, 1993
12-00-00	Cleaning	1F4	July 1, 1993
12-00-00	Cleaning Exterior Surfaces	1F4	July 1, 1993
12-00-00	Cleaning Windshield and Windows	1F5	July 1, 1993
12-00-00	Cleaning Headliner, Side Panels		
12-00-00	and Seats	1F5	July 1, 1993
12-00-00	Cleaning Carpets	1F5	July 1, 1993
12-00-00	Cleaning Landing Gear	1F6	July 1, 1993
12-10-00	REPLENISHING	1F7	July 1, 1993
12-10-00	SERVICING FUEL SYSTEM	1F8	July 1, 1993
12-10-00	FILLING FUEL SYSTEM	1F8	July 1, 1993
12-10-00	DRAINING MOISTURE FROM		
	FUEL SYSTEM	1F8	July 1, 1993
12-10-00	DRAINING FUEL SYSTEM	1F9	July 1, 1993
12-10-00	ENGINE LUBRICATION	1F9	July 1, 1993
12-10-00	DRAINING OIL SUMP	1F9	July 1, 1993
12-10-00	FILLING OIL SUMP	1F10	July 1, 1993
12-10-00	OIL SCREEN (SUCTION)	1F10	July 1, 1993
12-10-00	RECOMMENDATIONS FOR CHANGING		
	OIL	1F10	July 1, 1993
12-10-00	OIL FILTER (FULL FLOW)	1F10	July 1, 1993
12-10-00	LANDING GEAR	1F11	July 1, 1993
12-10-00	SERVICING OLEO STRUTS	1F11	July 1, 1993
12-10-00	FILLING NOSE GEAR OLEO STRUT	1F12	July 1, 1993
12-10-00	FILLING MAIN GEAR OLEO STRUT	1F13	July 1, 1993
12-10-00	INFLATING OLEO STRUTS	1F14	July 1, 1993
12-10-00	BRAKE SYSTEM	1F14	July 1, 1993
12-10-00	FILLING BRAKE CYLINDER RESERVOIR	1F14	July 1, 1993
12-10-00	DRAINING BRAKE SYSTEM	1F15	July 1, 1993
12-10-00	TIRES	1F15	July 1, 1993
12-10-00	TIRE BALANCE	1F16	July 1, 1993
12-10-00	HYDRAULIC SYSTEM	1F17	July 1, 1993
12-10-00	SERVICING HYDRAULIC		
12-10-00	PUMP/RESERVOIR	1F17	July 1, 1993
12-10-00	SERVICING ENGINE	1F17	July 1, 1993

CHAPTER 12 - SERVICING

TABLE OF CONTENTS/EFFECTIVITY

CHAPTER SECTION	SUBJECT	GRID NO.	EFFECTIVITY
12-10-00	ENGINE AIR FILTER	1F17	July 1, 1993
12-10-00	SERVICING PROPELLER	1F18	July 1, 1993
12-10-00	SERVICING ELECTRICAL SYSTEM	1F18	July 1, 1993
12-10-00	BATTERY	1F19	July 1, 1993
12-10-00	ALTERNATE AIR DOOR	1F19	July 1, 1993
12-10-00	THREAD LUBRICANTS	1F19	July 1, 1993
12-20-00	SCHEDULED SERVICING	1G1	July 1, 1993
12-20-00	Airframe Lubrication	1G1	July 1, 1993
12-20-00	Applicaation of Grease	1G1	July 1, 1993
12-20-00	Applicaation of Oil	1G1	July 1, 1993
12-20-00	Lubrication Charts	1G2	July 1, 1993
12-20-00	Chart 2 Special Instructions	1G2	July 1, 1993
12-20-00	Chart 3 Type of Lubricants	1G3	July 1, 1993
12-20-00	Chart 4 Main Landing Gear		
12-20-00	and Hydraulic System	1G4	July 1, 1993
12-20-00	Chart 5 Nose Gear	1G5	July 1, 1993
12-20-00	Chart 6 Control System		
12-20-00	(Sheet 1 of 3)	1G6	July 1, 1993
12-20-00	Chart 6 Control System		
12-20-00	(Sheet 2 of 3)	1G7	July 1, 1993
12-20-00	Chart 6 Control System		
12-20-00	(Sheet 3 of 3)	1G8	July 1, 1993
12-20-00	Chart 7 Air Conditioning		
12-20-00	Condenser)	1G9	July 1, 1993
12-20-00	Chart 8 Cabin and Baggage		
12-20-00	Doors and Seat)	1G10	July 1, 1993
12-20-00	Chart 9 Engine, Propeller, and		
12-20-00	Control Pivot Points)	1G11	July 1, 1993
12-20-00	Chart 10 Backup Extender and		
12-20-00	Fuel Selector)	1G12	July 1, 1993

SERVICING

A. General

This chapter contains routine handling and servicing procedures that are most frequently encountered. Frequent reference to this chapter will aid the individual by providing information such as the location of various components, ground handling procedures, routing service procedures and lubrication. When any system or component requires service other than the routine procedures as outlined in this section, refer to the appropriate section for that component.

B. Engine Cleaning

Before cleaning the engine compartment, place strips of tape on the magneto vents to prevent any solvent from entering these units.

(1) Place a pan under the engine to catch waste.

— CAUTION —

Do not spray solvent into the alternator, starter, vacuum pump, air intake and alternate air inlets.

(2) With the engine cowling removed, spray or brush the engine with solvent or a mixture of solvent and degreaser, as desired. It may be necessary to brush areas that were sprayed where heavy grease and dirt deposits have collected in order to clean them.

(3) Allow the solvent to remain on the engine from five to ten minutes; then rinse the engine clean with additional solvent and allow to dry.

— CAUTION —

Do not operate engine until excess solvent has evaporated or otherwise been removed.

(4) Remove the protective covers from the magnetos.

(5) Lubricate controls, bearing surfaces, etc., per Lubrication Charts. (Refer to Chapter 12.)

C. Aircraft Finish Care

(1) Cleaning

— WARNING—

Do not use gasoline, alcohol, benzene, carbon tetrachloride, thinner, acetone or window cleaning sprays to clean airplane.

The entire airplane is carefully finished inside and out to assure maximum service life. The external surfaces are coated with durable polyurethane enamel

(2) Cleaning Exterior Surfaces

The airplane should be washed with a mild soap and water. Harsh abrasives or detergents used on painted or plastic surfaces could make scratches or cause corrosion of metal surfaces. Cover areas where cleaning solution could cause damage. To wash the airplane, the following procedure may be used:

(a) Flush away loose dirt with water.

SERVICING (cont.)

(b) Apply cleaning solution with a rag, sponge or soft bristle brush.
(c) To remove stubborn oil and grease, use cloth dampened with naphtha.
(d) Where exhaust stains exist, allow solution to remain on the surface longer.
(e) Any good automotive wax may be used to preserve the painted surfaces. Soft cleaning cloths or a chamois should be used to prevent scratches when cleaning or polishing. A heavier coating of wax on the leading surfaces will reduce the abrasion problems in these areas.

(3) Cleaning Windshield and Windows.

— WARNING—

Do not use gasoline, alcohol, benzene, carbon tetrachloride, thinner, acetone or window cleaning sprays.

– CAUTION –

Use only mild soap and water when cleaning the heated windshield panel. Use of ANY other cleaning agent or material may cause distortion or damage to heated panel coatings

(a) Remove dirt, mud, etc., from exterior surfaces with clean water.
(b) Wash with mild soap and warm water, or an aircraft plastic cleaner using a soft cloth or sponge and a straight rubbing motion. Do not rub surfaces harshly.
(c) Remove oil and grease with a cloth moistened with kerosene.
(d) After cleaning plastic surfaces, apply a thin coat of hard polishing wax. Rub lightly with a soft cloth. Do not use a circular motion.
(e) A severe scratch or mar in plastic can be removed by using jeweler's rouge to rub out the scratch. Smooth both sides and apply wax.
(f) To improve visibility through windshield and windows during flight through rain, a rain repellent such as REPCON should be applied to windshield and windows. The surfaces of the windshield and windows treated becomes so smooth that water beads up and readily flows off the surface. Apply this product in accordance with the manufacturer's instructions. (Refer to Chapter 91, Chart 5, List of Consumable Materials for Specifications and Manufacturer's address.)

(4) Cleaning Headliner, Side Panels and Seats.

(a) Clean headliner, side panels, and seats with a stiff brush and vacuum where necessary.

— WARNING —

Solvent cleaners require adequate ventilation.

(b) Soiled upholstery, except leather, may be cleaned by using an approved air drying type cleaner or foam upholstery cleaner. Carefully follow the manufacturer's instructions. Avoid soaking or harsh rubbing.
(c) Leather material should be cleaned with saddle soap or mild soap and water.

SERVICING (cont.)

(5) Cleaning Carpets.

Use a small whisk broom or vacuum to remove dirt. For soiled spots, use a non-inflammable dry-cleaning fluid.

(6) Cleaning Landing Gear

Before cleaning the landing gear, plastic cover or similar material over the wheel and brake assembly.

(a) Place a pan under the gear to catch waste
(b) Spray or brush the bear area with solvent or a mixture of solvent and degreaser.
(c) Allow the solvent to remain on the gear for five to ten minutes. Rinse gear with additional solvent and allow to dry.
(d) Remove cover from wheel and remove the catch pan.
(e) Lubricate gear per Lubrication Chart. (Refer to 12-20-00).

A. REPLENISHING

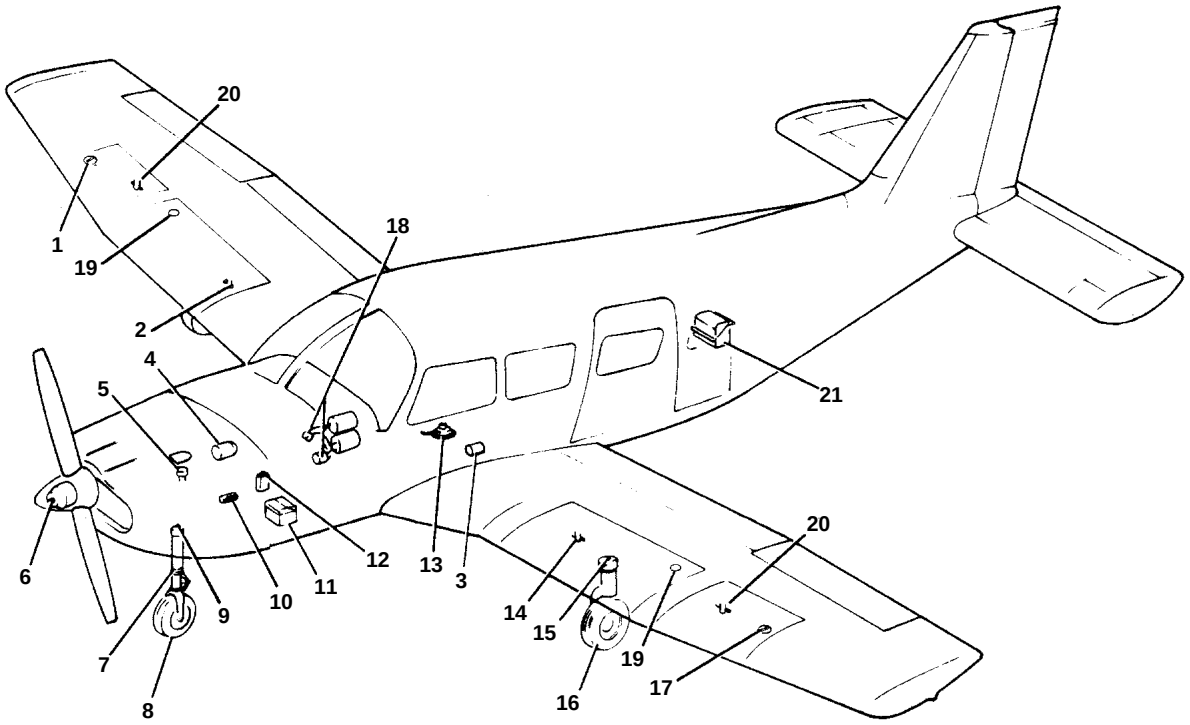

1. RIGHT MAIN FUEL TANK FILLER
2. RIGHT MAIN FUEL TANK DRAIN
3. ELECTRIC FUEL PUMP FILTER
4. ENGINE OIL FILTER CARTRIDGE
5. ENGINE OIL FILLER / INDICATOR
6. PROPELLER
7. NOSE GEAR LINK ASSEMBLY
8. NOSE GEAR TIRE
9. NOSE STRUT OLEO SHOCK FILLER
10. ENGINE OIL SUCTION SCREEN
11. BATTERY
12. BRAKE SYSTEM RESERVOIR
13. FUEL SELECTOR VALVE FILTER AND DRAIN
14. LEFT MAIN FUEL TANK DRAIN
15. MAIN GEAR OLEO SHOCK STRUT FILLER
16. MAIN TIRE
17. LEFT MAIN FUEL TANK FILLER
18. VACUUM REGULATOR AND CENTRAL AIR FILTER
19. SIGHT GAUGE
20. OUTBOARD FUEL TANK DRAIN
21. CENTRAL AIR FILTER (AIR CONDITIONER)

Service Points
Figure 1

B. SERVICING FUEL SYSTEM

At intervals of 50 hours or 90 days, whichever comes first, clean the fuel screens or filters. The filters in the bowl of the fuel selector valve and the screen of the electric fuel pump are located under the floorboard aft of the main spar. The screen located in the inlet side of the injector must also be cleaned.

(1) To flush the fuel tanks and selector valve, disconnect the fuel line at the injector.
(2) Select a fuel tank, turn on the electric fuel pump and flush fuel through the system until it is determined there is no dirt and foreign matter in the fuel valve or tank. During this operation, agitation of the fuel within the tank will help pick up and remove any dirt.
(3) Repeat this procedure for each tank.
(4) When all tanks are flushed, clean all filters.

C. FILLING FUEL SYSTEM

The fuel tanks of each wing are filled through filler necks located on the forward slope of the wings. Each wing tank holds a capacity of 55.5 U.S. gallons. Observe all required safety precautions for handling gasoline. Fill the tanks with fuel as specified on the placard adjacent to the filler neck.

D DRAINING MOISTURE FROM FUEL SYSTEM

The fuel system should be drained daily prior to first flight and after refueling to avoid the accumulation of water sediment. Each fuel tank is equipped with an individual quick drain located at the lower inboard rear corner of the tank. The fuel selector valve is provided with a quick drain valve (refer to Figure 2) located on the forward face of the spar box. Drain fuel tanks and selector valve per the followingÏ:

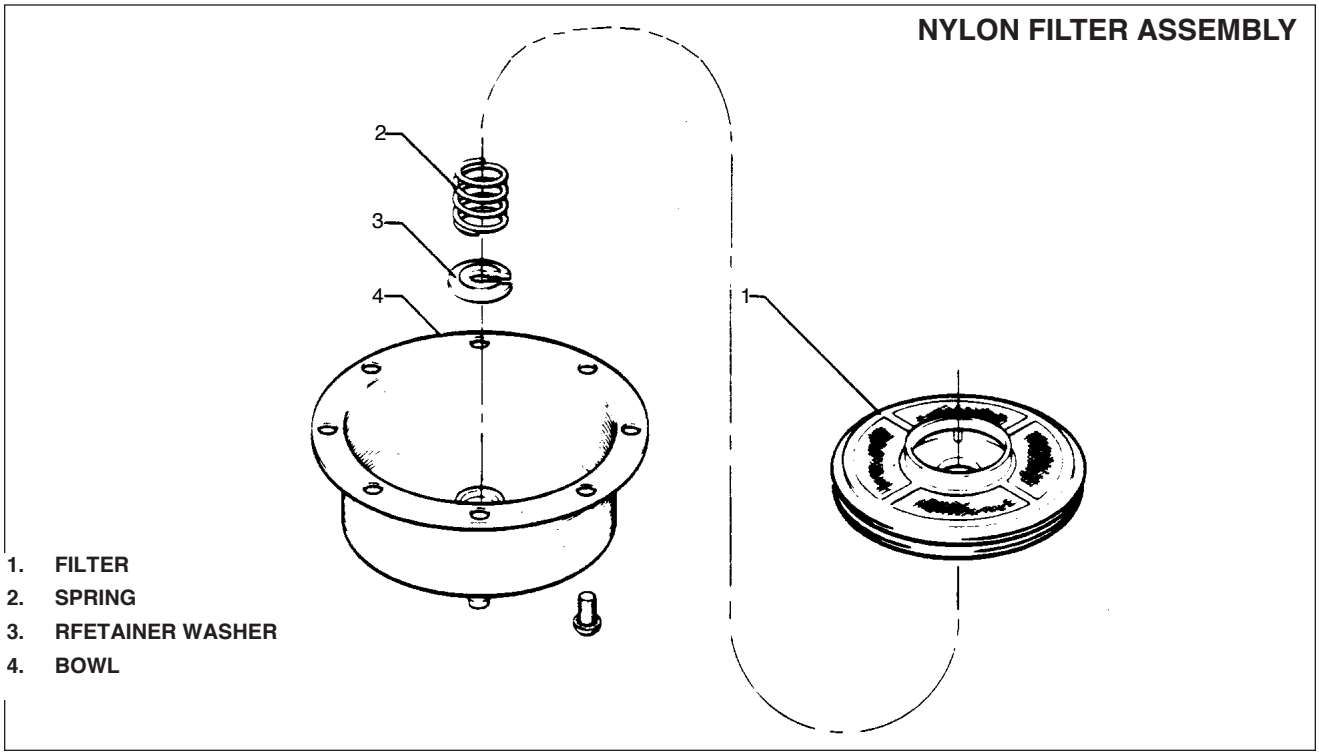

Fuel Filter Bowl and Screen
Figure 2

D DRAINING MOISTURE FROM FUEL SYSTEM (cont.)

(1) Drain each tank through its individual quick drain located at the lower inboard rear corner of the tank, making sure that enough fuel has been drained to insure that all water and sediment is removed.

— CAUTION —

After each use of the quick drain valve, check the fuel selector valve drain to ensure that the quick drain valve has properly seated and that there is no loss of fuel from the drain.

(2) Place a container under the fuel selector valve drain. Depress the quick drain handle and allow a sufficient amount of fuel to drain from the selector valve.
(3) Examine the contents of the container placed under the fuel selector valve drain for water and sediment and dispose of the contents.

— CAUTION —

When draining any amount of fuel, care should be taken to insure that no fire hazard exists before starting engine.

E. DRAINING FUEL SYSTEM

Fuel may be drained from the system by opening the valve at the inboard end of each fuel tank. The flush type drain valve requires the drain cup pin to hold the valve open. The remaining fuel in the system may be drained through the filter bowl. Any individual tank may be drained by closing the selector valve and then draining as desired.

F. ENGINE LUBRICATION

— CAUTION —

Do not introduce any trade additive to the basic lubricant unless recommended by the engine manufacturer.

Engine oil level should be checked before each flight. The engine oil and full flow cartridge filter should be changed every 50 hours of four months, whichever occurs first. If a screen type filter is used, the screen filter and oil should be changed every 25 hours or four months, whichever occurs first. Refer to the latest revision of Lycoming Service Bulletin 480. Should fuel other than the specified octane rating for the power plant be used, refer to the latest revision Lycoming Service Letter No. L185, for additional information and recommended service procedures. The engine manufacturer does not recommended oils by brand names. Use a quality brand Aviation Grade Oil of the proper season viscosity. For information on the use of detergent oil, refer to recommendations for Changing Oil and/or the latest revision of Lycoming Service Instruction No. 1014.

G. DRAINING OIL SUMP

To drain the oil sump, provide a suitable container with a minimum capacity of that required to fill the sump. Remove the engine cowl and open the oil drain located on the underside of the engine by pushing the arms of the drain up and turning counterclockwise. This will hold the drain in the open position. It is recommended the engine be warmed to operating temperature to insure complete draining of the old oil.POWER PLANT.

H. FILLING OIL SUMP

The oil sump should normally be filled with oil to the mark on the engine dipstick. The quantity of oil required for the engine may be found in Chapter 6. The specified grade of oil may be found in Chart 1201, the Lubrication Chart, or on the right cowl panel or each engine oil filter access door. To service the engine with oil, open the quick release access door on top of the cowl and remove the oil filler cap with dipstick.

I. OIL SCREEN (SUCTION)

The oil suction screen, located on the bottom aft end of the engine sump is installed horizontally. To remove, cut the safety wire and remove the hex head plug. The screen should be cleaned at each oil change to remove any accumulation of sludge and to examine for metal filings or chips. If metal particles are found in the screen , the engine should be examined for internal damage. After cleaning and inspection, place the screen inside the recess in the hex head plug, to eliminate possible damage to the screen. Insert the screen into the housing and when certain that the screen is properly seated, tighten and safety the plug with MS-20995-C41 safety wire.

J. RECOMMENDATIONS FOR CHANGING OIL

— NOTE —

Refer to the latest revision of Lycoming Service Instruction No. 1014 and Lycoming Service Letter No. L185.

(1) In engines that have been operating on straight mineral oil for several hundred hours, a change to additive oil should be made with a degree of caution, since the cleaning action of some additive oils will tend to loosen sludge deposits and cause plugged oil passages. When an engine has been operating on straight mineral oil and is known to be in excessive dirty condition, the switch to additive or compounded oil should be deferred until after the engine is overhauled.

(2) When changing from straight mineral oil to compounded oil, the following precautionary steps should be taken:
   (a) Do not add additive oil to straight mineral oil. Drain the straight mineral oil from the engine and fill with additive oil.
   (b) Do not operate the engine longer than five hours before the first oil change.
   (c) Check all oil screens for evidence of sludge or plugging and change oil every ten hours if sludge conditions are evident. Resume normal oil drain periods after sludge conditions improve.

K. OIL FILTER (FULL FLOW)

(1) The oil filter should be replaced after each 50 hours of engine operation; this is accomplished by removing the lockwire from the bolt head at the end of the filter housing, loosening the bolt, and removing the filter assembly from the adapter.

K. OIL FILTER (FULL FLOW) (cont.)

(2) Before discarding the throwaway filter, remove the element for inspection by using a Champion cutter tool, CT-470, available from Champion Spark Plug Co., Toledo, Ohio 43601. It will cut open any spin on type oil filter for inspection. Examine the material trapped in the filter for evidence of internal engine damage, such as chips or particles from bearings. In new or newly overhauled engines, some small particles of metallic shavings might be found; these are generally of no consequence and should not be confused with particles produced by impacting, abrasion or pressure. Evidence of internal engine damage found in the oil filter justifies further examination to determine the cause.

(3) After the filter has been replaced, tighten the cartridge to 18 to 20 foot-pounds of torque. Lockwire the bolt through the loops on the side of the housing to the drilled head of the thermostatic valve. Be sure the lockwire is replaced at both the attaching bolt head and the thermostatic oil cooler bypass valve. Use MS-20995-C41 safety wire.

L. LANDING GEAR

The landing gear consists of tires, brakes and oleo strut assemblies. These should be inspected for proper gear extension, scored piston tubes, possible hydraulic fluid leakage and security and condition of all connection points. Check the brake linings for wear and frayed edges, and brake discs for scoring. Replace if necessary. Minor servicing is described in the following paragraphs. For detailed services and overhaul instructions, refer to Chapter 32.

M. SERVICING OLEO STRUTS.

— CAUTION —

Do not exceed specified tube exposures.

Air-oil struts are incorporated in each landing gear oleo to absorb the shock resulting from the impact of the wheels on the runway during landing. To obtain proper oleo action, the nose gear oleo strut must have approximately 3.25 ± .25 inches of piston tube exposed, while the main gear struts require approximately 4.5 ± .50 inches of tube exposure (3.60 ± .25 inches of tube exposure when Heavy Duty Wheels, Brakes and Tires are installed).

— WARNING —

Do not release air by removing the strut valve core or filler plug. Depress the valve core pin until strut chamber pressure has diminished.

M. SERVICING OLEO STRUTS. (cont.)

—CAUTION —

Dirt and foreign particles form around the filler plugs of the landing gear struts, therefore, before attempting to remove these plugs, the tops of the struts should be cleaned with compressed air and/or with a dry solvent.

These measurements are taken with the airplane setting on a level surface under normal static load (empty weight of airplane plus full fuel and oil). If the strut has less tube exposed than that prescribed, determine whether it needs air or oil by raising the airplane on jacks. With the strut extended, remove the cap from the air valve at the top of the housing and depress the valve core to allow air to escape from the strut piston until it is fully compressed. Allow the foam from the air-oil mixture to settle and then determine if oil is visible up to the bottom of the filler plug hole. If the oil is visible at the bottom of the hole, then all that is required is the valve be checked for unsatisfactory conditions and air added as described in Inflating Oleo Struts. Should fluid be at any level below the bottom of the filler plug hole, the oleo should be checked for leaks, etc, and oil added as described in Filling Nose Gear Oleo Strut for the nose gear or Filling Main Gear Oleo Strut for the main gear. For repair procedures of the landing gear and/or oleo struts, refer to Chapter 32.

N. FILLING NOSE GEAR OLEO STRUT.

To fill the nose gear oleo strut with hydraulic fluid (MIL-H-5606), whether it be only the addition of a small amount or if the unit has been completely emptied and will required a large amount, it should be filled as follows:

(1). Raise the airplane on jacks until the nose wheel is completely clear of the ground. (Refer to Chapter 7.)

(2) Place a pan under the gear to catch spillage.

(3) If not previously accomplished, remove the engine cowl and relieve air from the strut housing chamber by removing the cap from the air valve and depressing the valve core.

(4) There are two methods by which the strut chamber may be filled as follows:

(a) Method 1:

1 Remove valve core from filler plug at the top of strut housing. Do not remove plug.

2 Attach one end of a clear plastic hose to the valve stem of the filler plug and submerge the other end in a container of hydraulic fluid. Ascertain that the end of the hose on the valve stem is tight and the fluid container is approximately equal in height to the top of the strut housing.

3 Fully compress and extend strut to draw fluid from the fluid container and expel air from strut chamber. By watching the fluid pass through the plastic hose, determine when the strut is full and no air is present in the chamber.

4 When air bubbles cease to flow through hose, compress strut fully and remove hose from the valve stem.

5 With strut compressed, remove filler plug to determine that the fluid level is visible up to the bottom of filler plug hole.

6 Install core in filler plug. Apply an appropriate thread lubricant to threads of filler plug and install plug in top of strut housing. Torque plug to 45 foot-pounds.

N. FILLING NOSE GEAR OLEO STRUT. (cont.)

(b) Method II:
1 Remove filler plug from top of strut housing.
2 Raise strut piston until fully compressed.
3 Pour fluid from a clean container through filler opening until it reaches bottom of filler plug hole.
4 Install filler plug finger tight. Extend and compress the strut two or three times to remove any air that may be trapped in housing.
5 Remove filler plug. Raise strut to full compression and fill with fluid if needed.
6 Apply an appropriate thread lubricant threads of filler plug and install filler plug in the top of strut housing. Torque plug to 45 foot-pounds.

(5) With airplane raised, compress and extend the gear strut several times Ensure strut actuates freely. The weight of the gear fork and wheel should extend strut.
(6) Clean off overflow of fluid, and inflate strut as described in Inflating Oleo Struts.
(7) Check that fluid is not leaking from around strut piston at bottom of housing.

0. FILLING MAIN GEAR OLEO STRUT.

Fill partly full or completely emptied main gear oleo strut with MIL-H-5606 fluid as follows:
(1) Raise the airplane on jacks until the main wheel is off the ground.
(2) Place a pan under the gear to catch spillage.
(3) If not previously accomplished, remove a cap on top wing to gain access to top of strut housing. Release air from strut housing chamber by removing cap from air valve and depressing valve core.
(4) Fill the main gear housing by one or two methods which are as follows:
(a) Method I:
1 Remove valve core from filler plug at top of strut housing. Do not remove plug.
2 Attach one end of a clear plastic hose to valve stem of filler plug and submerge the other end in a container of hydraulic fluid.
3 Fully compress and extend strut to draw fluid into the strut. By watching fluid pass through plastic hose, determine when the strut is full and no air is present.
4 When air bubbles cease to flow through hose, compress strut fully and remove hose from valve stem.
5 With strut fully compressed, remove filler plug to determine that fluid level is visible up to bottom of filler plug hole.
6 Install core in filler plug. Apply an appropriate thread lubricant to threads of filler plug and install plug in the top of strut housing. Torque plug to 45 foot-pounds.

0. FILLING MAIN GEAR OLEO STRUT. (cont.)

(b) Method II.

1 Remove the filler plug from the top of the strut housing.
2 Raise the strut to full compression.
3 Pour fluid from a clean container through the filler opening until it is visible at the top of the strut chamber.
4 Lower the gear until the wheel touches the ground and then fully compress and extend the strut three or four times to remove any air from the housing.
5 Raise the strut to full compression and if needed, fill with fluid to the bottom of the filler plug.
6 Apply thread lubricant (Parker 6PB) to the threads of the filler plug. Reinstall the filler plug and torque to 45 foot-pounds.

5. With airplane raised, retract and extend gear strut several times to ascertain that the strut actuates freely. The weight of gear fork and wheel should extend strut.
6. Clean off overflow of fluid and inflate strut as described in Inflating Oleo Struts.
7. Check that fluid is not leaking around the strut piston at the bottom of the housing.

P. INFLATING OLEO STRUTS.

Make certain that oleo strut has sufficient fluid and that torque link is properly connected. Attach a strut pump to air valve and inflate oleo strut to proper visible piston extension, or a pressure of 250 ± 25 psi (for the main gear struts) and 225 ± 22.5 psi for the nose gear strut.

When using pressure method pistons must be fully extended by raising aircraft off ground. (Refer to Chapter 7 Lifting and Shoring) .

When using the extension method, the aircraft should be fully serviced with fuel and engine oil and resting on its landing gear. Inflate strut until correct inches of piston is exposed. Rock aircraft several times to ascertain that gear settles back to the correct strut position. If a strut pump is not available, raise aircraft and use line pressure from a high pressure air system. Lower aircraft and, while rocking it, bring strut down to proper extension by releasing air from valve.

Check for valve core leakage before capping valve.

Q. BRAKE SYSTEM.

The brake system incorporates a hydraulic fluid reservoir through which the brake system is periodically serviced. Fluid is drawn from the reservoir by the brake cylinders to maintain the volume of fluid required for maximum braking efficiency. Spongy brake pedal action is often an indication that the brake fluid reservoir is running low on fluid. Instructions for filling the reservoir are given in Filling Brake Cylinder Reservoir. When found necessary to accomplish repairs to any of the brake system components, or to bleed the system, these instructions may be found in Chapter 32.

R. FILLING BRAKE CYLINDER RESERVOIR.

The brake cylinder reservoir is located on the left side of the firewall in the engine compartment. It should be checked at every 50 hour inspection and replenished as necessary. Fill with MIL-H-5606 fluid to level marked on reservoir, No brake adjustment of is necessary, though they should be checked periodically per instructions given in Chapter 32.

S. DRAINING BRAKE SYSTEM.

(1) Connect a hose to bleeder fitting on the bottom of the cylinder.
(2) Place other end of hose in a suitable container.
(3) Open bleeder fitting and slowly pump hand brake lever and appropriate brake pedal until fluid ceases to flow.
(4) Clean brake system by flushing with denatured alcohol.

T. TIRES

The airplane may be equipped with either tubed or tubeless tires.

Tubeless tires are designed to permit any air or nitrogen that is trapped in the cords or that diffuses through the liner to escape through special sidewall vents. This venting prevents pressure build-up within the cord body which might cause tread, sidewall or ply separation. Discounting tire growth after initial inflation, once the tire has been inflated, the maximum permissible pressure drop due to diffusion is 5% in any 24 hour period.

Vent holes penetrate the sidewall rubber to, or into, the cord body and may vary in size, depth and angle. Therefore, the amount of diffusion through these holes will vary.

When water or a soap solution is brushed over the outside of an inflated tubeless tire, bubbles form. Some vents may emit a continuous stream of bubbles. Others may produce intermittent bubbles. And some may not bubble at all. This variety is normal and does not mean that there is anything wrong with the tire. In fact, as long as a tubeless tire is inflated, there will be some diffusion from the vents. When the loss rate exceeds 5% in 24 hours, recheck for possible injuries. Vents should remain open, so check periodically to make sure they have not been covered over or closed by tire paint or spilled solvent. And since vents may be covered during retreading, check for evidence that your retreads have been revented.

Several basic characteristics of tubeless aircraft tires may be mistaken for problems:

(1) Tire growth in the first 12 to 24 hours after inflation will result in a seemingly severe pressure drop. Simply inflate, wait for another 24 hours, then check pressure. It will probably be within specs.
(2) Make sure that initial inflation is to recommended operating pressure to ensure full tire growth.
(3) It is normal for tubeless tires to show a small amount of pressure leakage throughout the life of the tires.

Maintain tires at pressure specified in Chart 1 (sheet 3 of 3), 6-00-00. When checking tire pressure, examine tires for wear, cuts, bruises and slippage on the wheel. Check that index mark on tire is aligned with index mark on wheel. Apply Age-Master #1 to tires to protect against ozone attack and weathering as follows:

(1) Clean oil and grease from all tire surfaces.
(2) Apply single heavy coat using brush at 0.4 - 0.5 fluid ounces per square foot. Cover surface completely and evenly; allow to dry for 5 - 10 minutes.
(3) Apply second coat per step 2; allow to dry for 20 - 30 minutes before handling.
(4) Remove agent on wheel assembly with cleaning solvent.
(5) Apply as conditions dictate.

U. TIRE BALANCE.

Proper balancing is critical for the life of aircraft tires. If a new tire is balanced upon installation it will usually remain balanced for the life of the tire without having any shimmy or flat spots. An inexpensive balancer can be made that will balance almost any tire for light aircraft. See Figure 3 for balancer details. Balance the tire as follows:

(1) Mount tire and tube (if one is used) on wheel, but do not install the securing bolts. Install wheel bearings in wheel; then, using the -7 bushings, -6 spacers, and -5 nuts, (refer to Figure 3) install the wheel-tire assembly on the pipe. Secure the nuts finger-tight so that the wheel halves touch each other. Be sure the bolt holes are aligned.Insert the axle through the pipe and place the wheel in the center of the balancer. Make sure the axle is only on the chamfered edges of the balancer and that it is at 90˚ to the sides of the balancer.

(2) Release the tire. If it is out of balance it will rotate, coming to rest with the heaviest point on the bottom. Tape a 1/2 ounce patch across top center of the tire. Rotate the tire 45˚ and release it again. If the tire returns to the same position, add a 1 ounce patch and again rotate the tire and release it. Continue this procedure until the tire is balanced.

(3) When balance is attained, put a chalk mark on the sidewall directly below the patch. Use one mark for each half ounce of weight needed. Mark the valve stem location on the tire and the opposite wheel half to assure reassembly in the same position. Remove the wheel from the balance stand, break it down and clean the inside of the tire with toluol. Apply a coat of patch cement to both the patch and the inside center of the tire in line with the chalk marks. When the cement has dried, install the patches making certain they are on the center line of the tire and aligned with the chalk marks on the sidewall. Burnish the patches to remove trapped air, etc.

(4) When reassembling the wheel, powder the inside of the tire. Mount the tire on the valve side of the wheel in the same position it was in when it was balanced. Install the other wheel half, aligning the chalk marks. Install the bolts and tighten to required torque, then air the tire and recheck the balance. The wheel should not be more than 1/2 ounce out of balance.

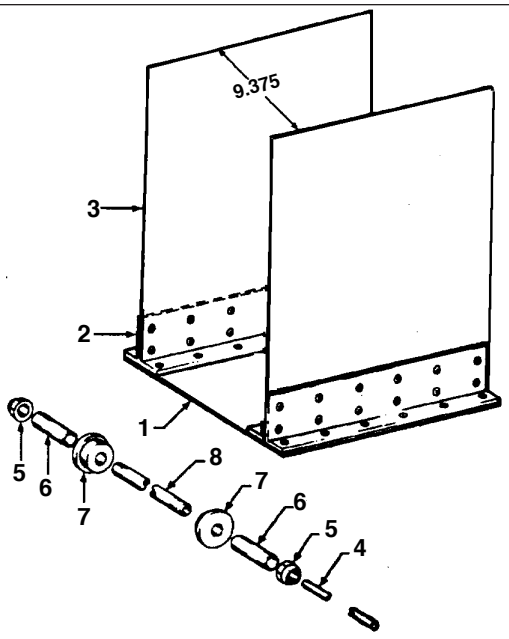

The following list of material were used in making the balancer:

-1	1 ea. Base	12 x 11	0.190 2024 T3 clad aluminum alloy
-2	2 ea. Tee	2.5 x 2 x 11	0.190 2024 T4 extruded aluminum alloy
-3	2 ea. Sides	14 x 11	0.125 2024 T3 clad aluminum alloy
-4	1 ea Axle	0.125 x 10.25	4130 steel, normalized
-5	2 ea. Nuts	AN 365-624	
-6	2 ea. Spacer	0.50 X 2.25	5052-0 aluminum tubing
	2 ea. Spacer	0.50 X 1.25	5052-0 aluminum tubing
-7	2 ea. Bushing	1.480 X 1.625 X 1.00	Richlight, phenolic or aluminum
	2 ea. Bushing	2.240 X 1.37 X 1.00	Richlight, phenolic or aluminum
-8	1 ea. Pipe	1/8 X 9.3	Black steel pipe.
*	2 ea. Bearings	Save two of each sice worn wheel bearings from previous inspections	

Wheel Balancer
Figure 3

V. HYDRAULIC SYSTEM.

The hydraulic pump and landing gear actuating cylinders should be checked for leaks, tightness of line fittings and general condition. The cylinder rods are to be free of all dirt and grit. To clean the rods, use an oil soaked rag and carefully wipe them. All the hydraulic lines should be checked for leaks, kinks, corrosion and attachment fittings for tightness and security. Repair and check procedures for the hydraulic pump, cylinders, and various components may be found in Chapter 29.

W. SERVICING HYDRAULIC PUMP/RESERVOIR.

The fluid level of the reservoir of the combination pump and reservoir should be checked every 50 hours by viewing the fluid through the filler plug hole in the hydraulic pump. Access to the pump is through the panel at the left side of the forward baggage compartment.

— NOTE —

A small vent hole is located under the vent screw head. Retain .015 inch clearance between the screw head and the small vent hole.

To check fluid level, remove the filler plug located on the forward side of the pump and ascertain that fluid is visible up to the bottom of the filler plug hole. Should fluid be below the hole, loosen the vent screw and add fluid, MIL-H-5606, through the filler hole until full. Reinstall the filler plug.

X SERVICING ENGINE

Regularly check the engine compartment for oil and fuel leaks, chafing of lines, loose wires and tightness of all parts. Refer to Chapter 20 for cleaning the engine compartment.

Y. ENGINE AIR FILTER.

Check induction air filter each 50 hour maintenance inspection . Clean or replace if found to be dirty. Replace the filter after one year, ten cleanings or 500 flight hours, whichever comes first.

(1) Removing Engine Air Filter

(a) PA-32R-301

1 Remove air filter access panel located on lower left aft engine cowl by releasing quarter turn fasteners

2 Remove wing nuts securing air filter cover plate.

3 Remove air filter

(b) PA-32R-301 II HP

1 Remove lower engine cowling.

2 Remove wing nuts securing air filter cover plate located on lower left aft engine section.

3 Remove air filter

(c) PA-32R-301T

1 Remove lower engine cowling.

2 Locate air filter box located on lower right front of engine on bottom of air induction valve assembly.

3 Release four quarter-turn fasteners securing the filter box. Remove filter box

4 Remove air filter.

Y ENGINE AIR FILTER. (cont.)

(2) Cleaning Engine Air Filter

(a) Tap gently to remove dirt particles. Do not blow out with compressed air

(b) Flush excessively dirty filter with running water (***less*** than 40 psi) and soak it in a solution of Donaldson D- 1400 compound and water. Do not use solvents or gasoline. Rinse until clear water comes through the filter.

(c) Dry filter thoroughly before inspection. Mechanical dryers may be used provided the heated air is circulated and maintained ***below*** 180°F. Do not use a light bulb.

(d) Inspect filter medium for holes or tears and insure frame provides a good air seal. Replace defective filters.

(3) Installation of Engine Air Filter

After cleaning or replacing the filter, install the filter in the reverse order of removal.

(a) PA-32R-301

1 Position air filter on engine.
2 Install wing nuts securing air filter cover plate.
3 Install air filter access panel by securing quarter turn fasteners

(b) PA-32R-301 II HP

1 Position air filter on engine.
2 Install wing nuts securing air filter cover plate.
3 Install lower engine cowling.

(c) PA-32R-301T

1 Position air filter in filter box.
2 Install air filter box to bottom of air induction valve assembly.
3 Secure four quarter-turn fasteners attaching filter box to induction air valve assembly.
4 Install lower engine cowling.

Z. SERVICING PROPELLER.

Inspect spinner, back plate and propeller surfaces for nicks, scratches, corrosion and cracks. Remove minor nicks and scratches per instructions in 61-10-00. Paint face of each blade with a flat paint to retard glare. Wipe surfaces with a light oil or wax to prevent corrosion.

Inspect propellers for grease or oil leakage and freedom of rotation on the hub pilot tube. To check freedom of rotation, rock the blade back and forth through the slight freedom allowed by the pitch change mechanism. Lubricate the propeller at 100 hour intervals in accordance with the Lubrication Chart.

Additional service information for the propeller may be found in Chapter 61.

AA. SERVICING ELECTRICAL SYSTEM

Servicing the electrical system involves adding distilled water to the battery to maintain correct electrolyte level, and checking for any spilled electrolyte that would lead to corrosion. The security of all electrical connections should be checked as well as the operation of all lights, general condition of the generator or alternator and starter. All electrical wires should be inspected for chafing and bare wires. For detailed information on this system, refer to Chapter 24 of this manual.

AB. BATTERY

The battery is located under the left floor of the forward baggage compartment. Check battery for proper fluid level. ***Do not*** fill battery above the baffle plates. ***Do not*** fill the battery with acid - use water only. A hydrometer check will determine the percent of charge in the battery.

Check for spilled electrolyte and corrosion at each 50 hour inspection or every 30 days, whichever comes first. Should corrosion be found in the box, on the terminals or around the battery, remove battery and clean both the box and battery by the following procedure:

(1) Remove the box drain cap from the underside of the fuselage and drain off any electrolyte that may have overflowed into the box.

— CAUTION —

Do not allow soda solution to enter battery.

(2) Clean battery and battery box. Neutralize corrosion effects by applying a solution of baking soda and water mixed to a consistency of thin cream. Apply mixture until all bubbling action has ceased.
(3) Rinse battery and box with clean water and dry.
(4) Place the cap over the battery box drain.
(5) Install battery.

AC. ALTERNATE AIR DOOR

The alternate door is located in the air induction box to provide a source of air to the engine should there be an air stoppage through the filter system. The following should be checked during inspection:

(1) Check that air door seals are tight and that the hinge is secure.
(2) Check that when the cockpit control is in the closed position the door is properly seated in the closed position.
(3) Actuate the door by operating the control lever in the cockpit to determine that it is not sticking or binding.
(4) Check the cockpit control cable for free travel.

CHART 1.
THREAD LUBRICANTS

TYPE OF LINE	TYPE OF LUBRICANT
Brakes	MIL-H-5606
Freon	TT-A-580 or MIL -T-5544, Anti-Seize Compound
Fuel	MIL -T-5544, Anti-Seize, Graphite Patrolatum
LandingGear Air Valve	6PB Parker
Oil	MIL-G-6032, Lubrication Grease (Gasoline and Oil Resistant)
Pitot and Static	TT-A-580 (JAN-A-669). Anti-Seize Compound (White Lead Base)
—NOTE —	
Lubricate engine fittings only with the fluid contained in the particular line.	

GRIDS 1F20 THROUGH 1F24
PAGES 12-17 THROUGH 12-20
INTENTIONALLY LEFT BLANK

A. SCHEDULED SERVICING

(1) Airframe Lubrication

Proper lubrication procedures are valuable for prolonging the service life of the airplane and as a means of reducing the frequency of extensive and expensive repairs. The periodic application of recommended lubricants to their relevant bearing surfaces, combined with cleanliness, as detailed in the following paragraphs, ensures maximum efficiency and utmost service of all moving parts. Lubrication instruction regarding the locations, time intervals, and type of lubricants used are found in proper lubrication charts. To ensure the best possible results from the application of lubricants, observe the following precautions :

— NOTE —

If the airplane is inactive for long periods of time. it should be lubricated in accordance with Lubrication Chart every 90 days.

(a) Use only recommended lubricants. Where general purpose lubricating oil is specified, but unavailable, clean reciprocating engine oil may be used as a satisfactory substitute.
(b) Check components for evidence of excessive wear and replace as necessary.
(c) Remove all excess lubricants from components to prevent collecting dirt and sand in quantities capable of causing excessive wear or damage to bearing surfaces.

(2) Applicaation of Grease

When lubricating bearings and bearings surfaces with a grease gun, ensure gun is filled with new, clean grease of the grade specified for the particular application before applying lubricant to grease fittings.

(1) If a reservoir is not provided around a bearing, apply lubricant sparingly and wipe off excess.
(2) Remove wheel bearings from the wheel hub and clean thoroughly with a suitable solvent. When packing with grease, be sure the lubricant enters the space between the rollers in the retainer ring. Do not pack the grease into the wheel hub.
(3) Use extra care when greasing propeller hub to avoid blowing clamp gaskets. Remove one grease fitting and apply grease to the other fitting until fresh grease appears at the hole of the removed fitting. Uneven greasing effects propeller balance.

(3) Applicaation of Oil

If specific librication instructions fro s certain components ar not available, observe the following prcautions:

— CAUTION —

After thoroughly washing airplane, ensure landing gear, flight surface wings, flap tracks, elevator trim screw, and engine compartment are still properly lubricated

(a) Apply oil sparingly. Never apply more than enough to coat the bearing surfaces.
(b) Since the control cables are sufficiently coated by the manufacturer, additional protection for the prevention of corrosion is unnecessary.

A. SCHEDULED SERVICING (cont.)

(3) APPLICATION of Oil (cont.)

— CAUTION —

Be careful not to add too much oil, because the excess will be thrown off during operation and will cause pitting and burning of the magneto points.

(c) Squeeze the magneto cam follower felts at regular inspection periods. If oil appears on fingers, do not add oil. If the felt is dry, moisten with light oil.

(4) Lubrication Charts

The lubrication charts consist of individual illustrations for the various aircraft systems. Each component to be lubricated is indicated by a number, the type of lubricant and the frequency of application. Special instructions are listed at the beginning of the lubrication charts and with the applicable component illustration.

CHART 2
SPECIAL INSTRUCTIONS

1.	BEARINGS AND BUSHINGS - CLEAN EXTERIOR WITH A DRY TYPE SOLVENT BEFORE LUBRICATING.
2.	LUBRICATING POINTS -WIPE ALL LUBRICATION POINTS CLEAN OF OLD GREASE, OIL, DIRT, ETC., BEFORE LUBRICATING.
3.	AIR FILTER - TO CLEAN FILTER, TAP GENTLY TO REMOVE DIRT PARTICLES OR WASH IN WARM WATER AND MILD DETERGENT AND DRY. DO NOT BLOW OUT WITH COMPRESSED AIR. DO NOT USE OIL. REPLACE FILTER IF DAMAGED.
4.	WHEEL BEARINGS ‘ DISASSEMBLE AND CLEAN WITH A DRY TYPE SOLVENT. ASCERTAIN THAT GREASE IS PACKED BETWEEN THE ROLLER AND CONE. DO NOT PACK GREASE IN WHEEL HOUSING. WHEEL BEARINGS REQUIRE CLEANING AND REPACKING AFTER EXPOSURE TO AN ABNORMAL QUANTITY OF WATER.
5.	APPLY FLOUROCARBON DRY LUBRICANT TO DOOR SEALS AT LEAST ONCE A MONTH TO IMPROVE SEALING CHARACTERISTICS AND TO PREVENT THE SEAL FROM STICKING.
6.	PROPELLER - REMOVE ONE OF THE TWO GREASE FITTINGS FOR EACH BLADE. APPLY GREASE THROUGH THROUGH FITTING UNTIL FRESH GREASE APPEARS AT HOLE OF REMOVED FITTING.
7.	FUEL SELECTOR VALVE - LUBRICATE AREA WHERE DETENT BALL MOVES ACROSS COVER PLATE (ON EXTERNAL VALVE ONLY).
8.	DIAPHRAGM SHAFT AND BUSHING - SOFT FILM SILICON COMPOUND (MIL-C-21567) IS RECOMMENDED FOR USE WHEN OPERATING AT TEMPERATURES BELOW 20˚F.

NOTES

1. SEE THE LATEST REVISION OF LYCOMING SERVICE INSTRUCTIONS NO. 1014 FOR USE OF DETERGENT OIL.
2. REMOVE ALL EXCESS GREASE FROM GREASE FITTINGS.
3. BATTERY - FLUID LEVEL AND CONDITION CHECK EVERY 25 HOURS.

CAUTIONS

1. DO NOT USE HYDRAULIC FLUID WITH A CASTOR OIL OR ESTER BASE.
2. DO NOT OVER LUBRICATE COCKPIT CONTROLS.
3. DO NOT APPLY LUBRICATE TO RUBBER PARTS.
4. DO NOT LUBRICATE CABLES: THIS CAUSES SLIPPAGE.

A. SCHEDULED SERVICING (cont.)

(4) Lubrication Charts

CHART 3
TYPE OF LUBRICANTS

LUBRICANT	SPECIFICATION	PREFERRED PRODUCT AND VENDOR
LUBRICATING OIL, GENERAL PURPOSE, LOW TEMPERATURE	MIL-L-7870	
LUBRICATING OIL, AIRCRAFT RECIPROCATING ENGINE (PISTON) GRADE AS SPECIFIED SAE 50 ABOVE 60 AIR TEMP. SAE 40 30 TO 90F AIR TEMP. SAE 30 0 TO 70 AIR TEMP SAE 20 BELOW 10F AIR TEMP.	MIL-L-6082	
HYDRAULIC FLUID PETROLEUM BASE	MIL-H-5606	
GREASE, AIRCRAFT AND INSTRUMENT, GEAR AND ACTUATOR SCREW	MIL-G-23827	TEXACO-LOW TEMP GREASE EP AEROSHELL GREASE 7 MOBIL GREASE 27 ROYCO 27A
GREASE, AIRCRAFT HIGH TEMPERATURE	MIL-G-3545C	TEXACO MARFAX ALL PURPOSE GREASE, MOBIL GREASE 77 (OR MOBILUX EP2), SHELL ALVANIA EP GREASE 2
PARKER O-RING LUBRICANT		
AERO LUBRIPLATE		FISKE BROS. REFINING CO.
FLUOROCARBON RELEASE AGENT DRY	MIL-L-60326	MILLER-STEPHENSON LUBRICANTMS-122
GREASE - LUBRICATION GENERAL PURPOSE AIRCRAFT	MIL-G-7711	AEROSHELL GREASE 6 ROYCO II
SILICONE, COMPOUND	MIL-C-21567	
GREASE, AIRCRAFT WIDE-TEMPERATURE	MIL-G-81322	MOBIL GREASE 28 AEROSHELL GREASE 22 ROYCO 22S

A. SCHEDULED SERVICING (cont.)

(4) Lubrication Charts

CHART 4
LUBRICATION CHART (Main Landing Gear and Hydraulic System)

COMPONENT	LUBRICANT	FREQUENCY
1. MAIN GEAR PIVOT POINTS	MIL-G-23827	100 HOURS
2. MAIN GEAR DOOR HINGE	MIL-L-7870	100 HOURS
3. MAIN GEAR TORQUE LINKS	MIL-L-7870	100 HOURS
4. EXPOSED MAINOLEO STRUT	FLUOROCARBON RELEASE AGENT DRY LUBRICANT MS-122, MIL-L-60326	100 HOURS
5. MAIN GEAR WHEEL BEARINGS	TEXACO MARFAX ALL PURPOSE GREASE OR MOBILE GREASE 77 (OR MOBIL EP2 GREASE) MIL-G-3545C	100 HOURS
6. MAIN GEAR DOOR CONTROL ROD ENDS	MIL-L-7870	100 HOURS
7 MAIN GEAR SIDE BRACE LINK ASSEMBLY	MIL-G-23827	100 HOURS
8. UPPER SIDE BRACE SWIVEL FITTING	MIL-G-23827	100 HOURS
9. MAIN GEAR DOWN LOCK ASSEMBLY RETRACTION FITTING CYLINDER ATTACHMENT POINTS	MIL-L-7870	100 HOURS
10. MAIN GEAR OLEO STRUT FILLER POINT	MIL-H-5606	AS REQUIRED
11. HYDRAULIC PUMP RESEVOIR	MIL-H-5606	
12. BRAKE RESEVOIR	MIL-H-5606	

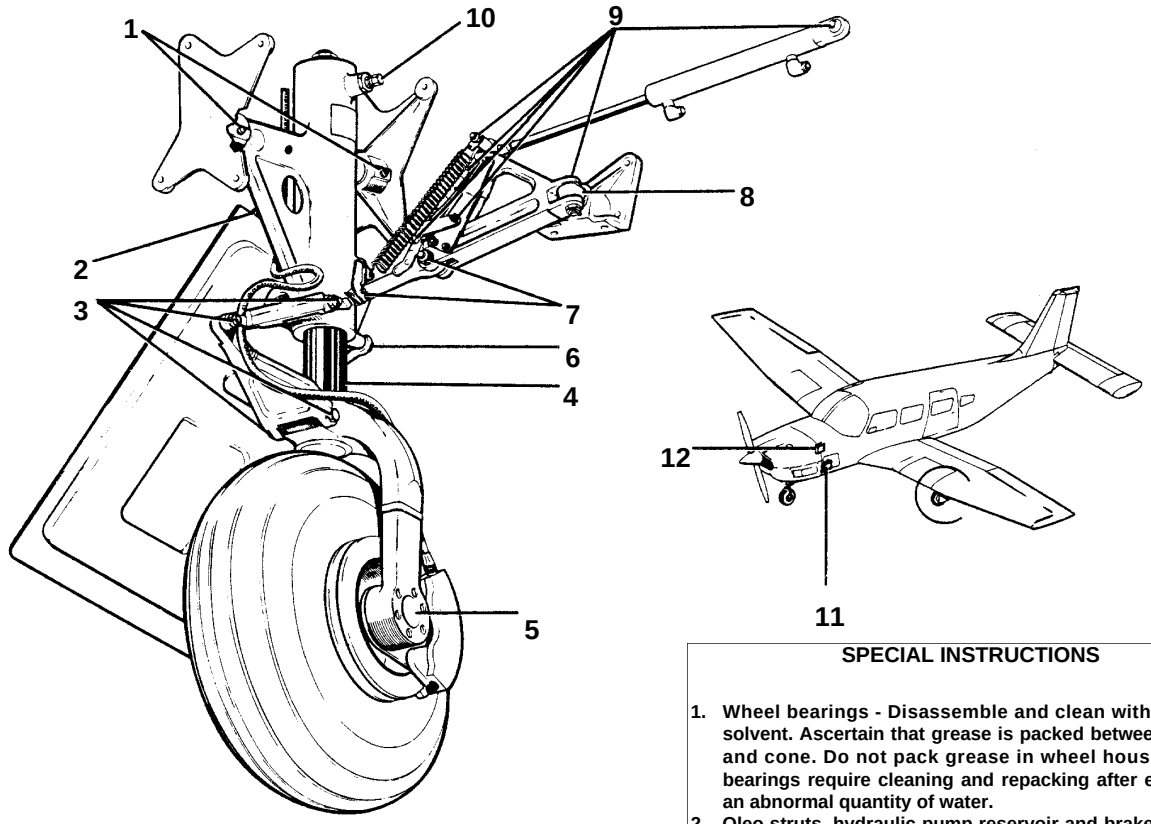

SPECIAL INSTRUCTIONS

1. **Wheel bearings - Disassemble and clean with a dry type solvent. Ascertain that grease is packed between the roller and cone. Do not pack grease in wheel housing. Wheel bearings require cleaning and repacking after exposure to an abnormal quantity of water.**
2. **Oleo struts, hydraulic pump reservoir and brake reservoir - Fill per instructions on unit or container or refer to service manual.**

Main Landing Gear and Hydrauluc System
Figure 4

A. SCHEDULED SERVICING (cont.)

(4) Lubrication Charts (cont.)

CHART 5
LUBRICATION CHART (Nose Gear)

COMPONENT	LUBRICANT	FREQUENCY
1. NOSE GEAR STRUT HOUSING GREASE FITTING	MIL-G-23827	100 HOURS
2. NOSE GEAR PIVOT POINT AND HYDRAULIC CYLINDER ROD END	MIL-L-7870	100 HOURS
3. NOSE GEAR DOOR RETRACTION MECHANISM	MIL-L-7870	100 HOURS
4 NOSE GEAR DOOR HINGES	ML-L-7870	100 HOURS
5 EXPOSEO OLEO STRUT	FLUOROCAR80N RELEASE AGENT DRY LUSRICANT MS-122, MIL-L-60326	100 HOURS
6. NOSE WHEEL 8EARINGS	TEXACO MARFAX ALL PURPOSE GREASE OR MO81L GREASE 77 (OR MOBIL EP2 GREASE) MIL-G-35456	100 HOURS
7. NOSE GEAR DRAG LINK ASSEMBLIES	MIL-L-7870	100 HOURS
6 NOSE GEAR TORQUE LINK ASSEM8LY AND STRUT HOUSING	MIL-G-23827	100 HOURS
9 DOWNLOCK HOOK. TENSION SPRING ARMS. SHLIMMY DAMPENER AND ALIGNING ROLLER PIVOT POINTS	MIL-L-7870	100 HOURS
10 STEERING BELLCRANK PIVOT POINTS AND ROD ENDS	MIL-L-7870	100 HOURS
11. NOSE GEAR OLEO STRUT FILLER POINT	MIL-H-5606	AS REQUIRED

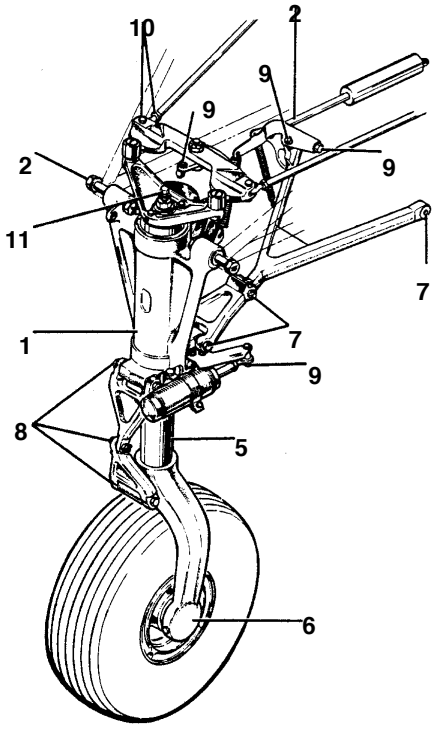

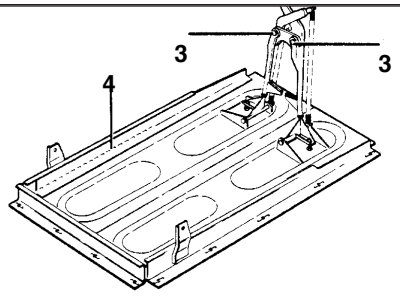

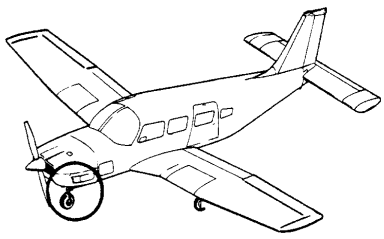

SPECIAL INSTRUCTIONS

1. **Wheel bearings - Disassemble and clean with a dry type solvent. Ascertain that grease is packed between the roller and cone. Do not pack grease in wheel housing. Wheel bearings require cleaning and repacking after exposure to an abnormal quantity of water.**
2. **Oleo struts - Fill per instructions on unit or container or refer to service manual.**

Nose Gear
Figure 5

A. SCHEDULED SERVICING (cont.)

(4) Lubrication Charts (cont.)

CHART 6
LUBRICATION CHART (Control System - Sheet 1 of 3)

—CAUTION—

Do not lubricate control wheel shaft or bushing. Clean only using alcohol or other suitable solvent.

COMPONENT	LUBRICANT	FREQUENCY
L. AILERON HINGE PINS	MIL-L-7870	100HRS
2. FLAP HINGE BEARINGS	MIL-L-7870	100HRS
3. STABILATOR HINGE PINS	MIL-L-7870	100HRS
4. RUDDER HINGE BEARINGS	MIL-L-7870	100HRS
5. CONTROL CABLE PULLEYS	MIL-L-787 0	100HRS
6. TRIM CONTROL WHEEL	MIL-L-7870	100HRS
7. O-RING, CONTROL SHAFT BUSHING	PARKER O-RING LUBRICANT	AS REQUIRED
8. TEE BAR PIVOT POINT	MIL-L-7&70	100HRS
9. CONTROL COLUMN CHAIN	MIL-L-7870	500HRS
10. CONTROLCOLUMN FLEX.JOINTSANDSPROCKET	MIL-L-7870	100HRS
11. STABILATOR CONTROL	MIL-L-7870	100HRSπ

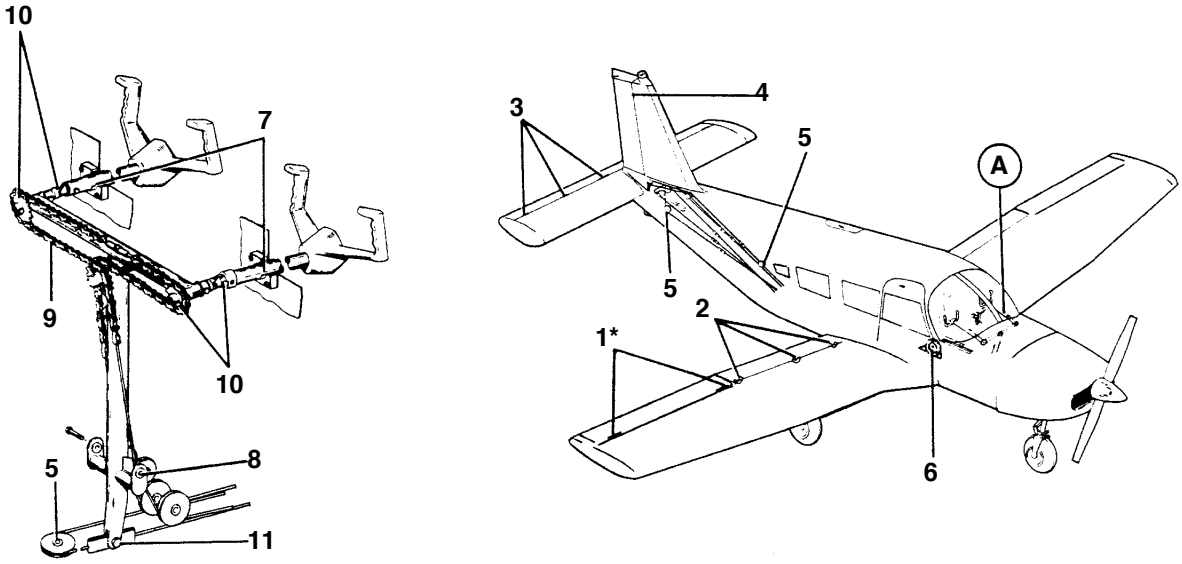

SPECIAL INSTRUCTIONS

* Aileron hinges with teflon sleeves should hot be lubricated. aileron hinges without teflon sleeves should first be cleaned with a dry type solvent; then lubricated with MIL-L-7870

Control System
Figure 6 (Sheet 1 of 3)

A. SCHEDULED SERVICING (cont.)

(4) Lubrication Charts (cont.)

CHART 6
LUBRICATION CHART (Control System - Sheet 2 of 3)

COMPONENT	LUBRICANT	FREQUENCY
1. FLAP TORQUE TUBE BEARING BLOCKS	MIL-L-7870	100HRS
2. FLAP CONTROL ROD END BEARINGS	MIL-L-7870	100HRS
3 .FLAP HANDLE PIVOT POINT, LOCK MECHANISM	MIL-L-7870	100HRS
AND TURNBUCKLE ENDM	MIL-L-7870	100HRS
4.FLAP RETURN ANO TENSION CHAINS	MIL-L-7870	500HRS
5.AILERON BELLCRANK PIVOT POINTS	MIL-L-7870	100HRS
6.AILERON CONTROL ROD END BEARINGS	MIL-L-7870	100HRS
7.AILERON BELLCRANK CABLE ENDS	MIL-L-7870	100HRS

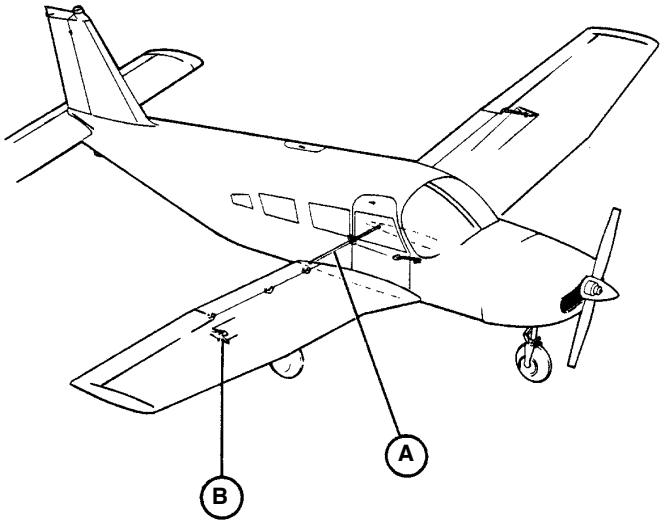

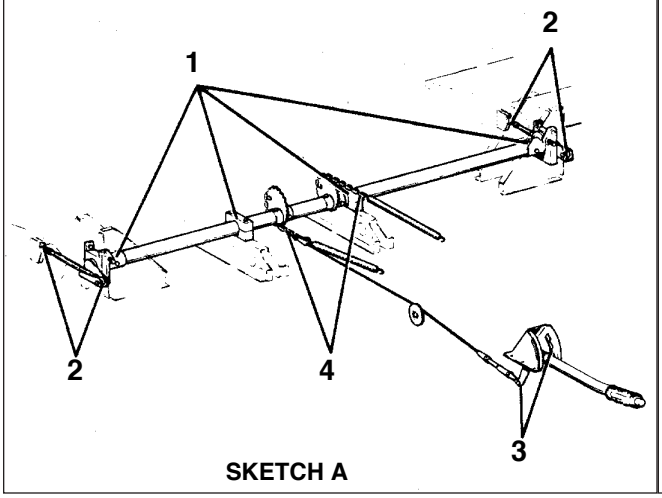

SKETCH A

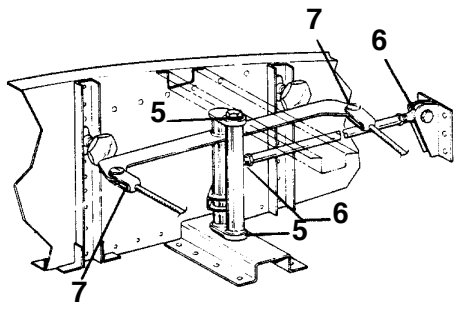

SKETCH B

Control System
Figure 6 (Sheet 2 of 3)

A. SCHEDULED SERVICING (cont.)

(4) Lubrication Charts (cont.)

CHART 6
LUBRICATION CHART (Control System - Sheet 3 of 3)

COMPONENT	LUBRICANT	FREQUENCY
1. RUDDER TUBE BEARING BLOCKS	FLUOROCARBON RELEASE AGENT DRY LUBRICANT MS-22, MIL-L-60326	100 HRS
2. TOE BRAKE CYLINDER ATTACHMENTS	MIL-L-7870	100 HRS
3. RUDDER TUBE CONMNECTIONS	MIL-L-7870	100 HRS
4. BRAKE ROD ENDS	MIL-L-7870	100 HRS
6. STABILATOR TRIM SCREW	AERO LUBRIPLATE, OR MAG-1, FISKE BROS REFINING CO	100 HRS
7 STABILATOR SCREW/TAB LINKS	MIL-L-7870	100 HRS
8 STABILATOR HINGE POINTS	MIL-L-7870	100 HRS
9. RUDDER TRIM ASSEM8LY	MIL-L-7870	100 HRS

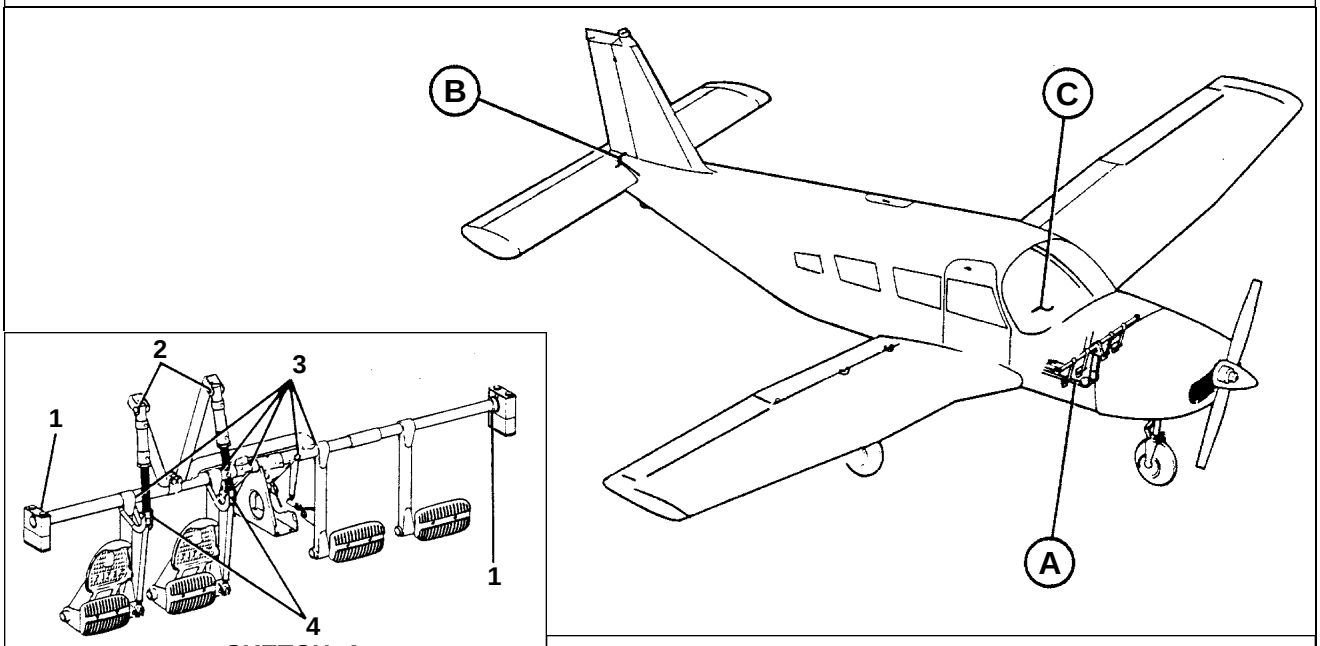

SKETCH A

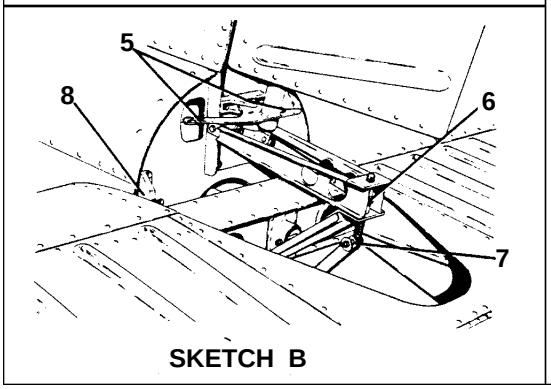

SKETCH B

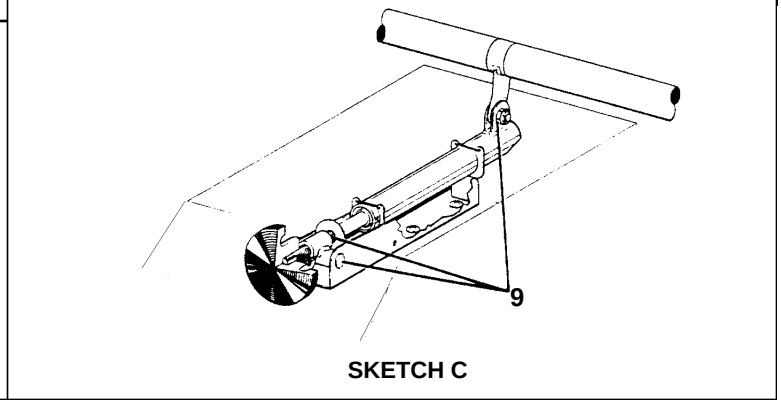

SKETCH C

Control System
Figure 6 (Sheet 3 of 3)

A. SCHEDULED SERVICING (cont.)

(4) Lubrication Charts (cont.)

CHART 7
LUBRICATION CHART (Air Conditioning Condenser)

	COMPONENT	LUBRICANT	FREQUENCY
1.	CONDENSER HINGE AND ACTUATORS	MIL-L-7870	100 HR5
2.	CONDENSER DOOR ACTUATING TRANSMISSION	MIL-G.23827	500 HR5

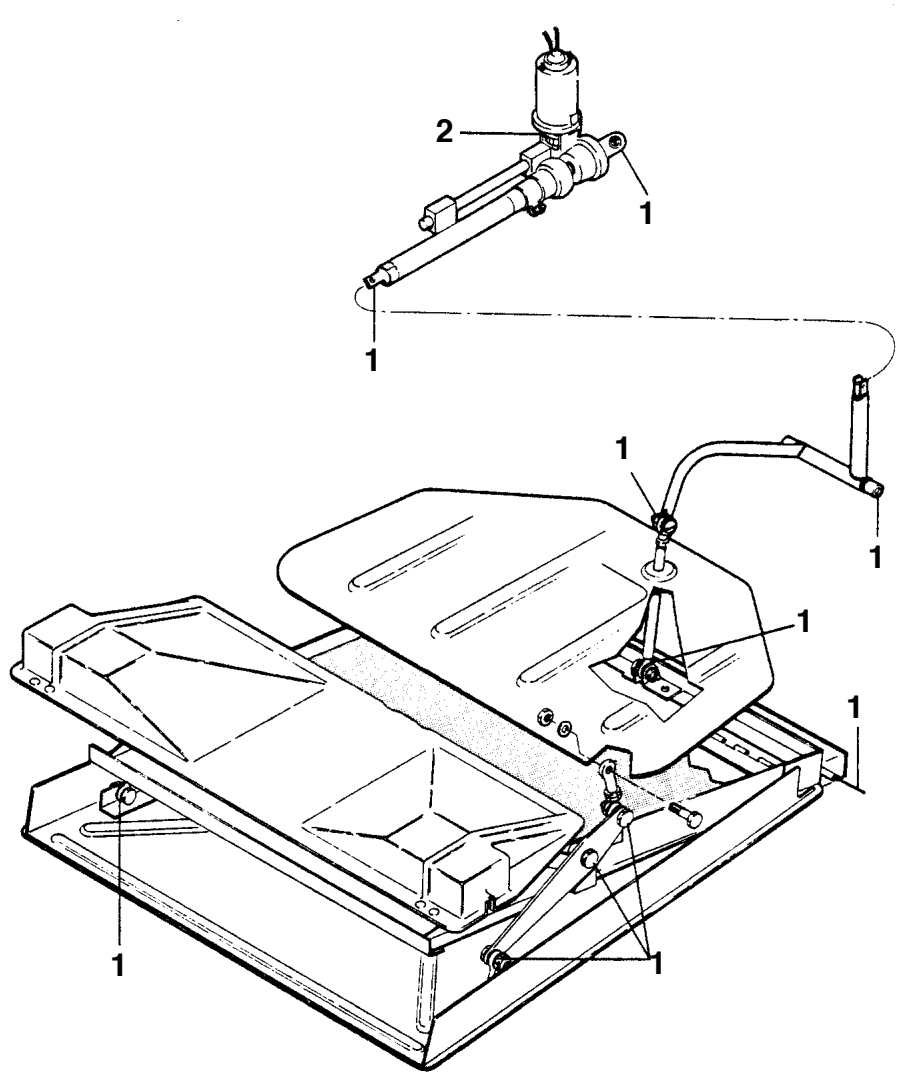

Air Conditioning Condenser
Figure 7

A. SCHEDULED SERVICING (cont.)

(4) Lubrication Charts (cont.)

CHART 8
LUBRICATION CHART (Cabin and Baggage Doors and Seat)

	COMPONENT	LUBRICANT	FREQUENCY
1.	DOOR HINGES	MIL-L-7870	100 HRS
2	DOOR SEALS	FLUOROCARBON RELEASE AGENT DRY LUBRICANT MS-122, MIL-L-60326	50 HRS
3	DOOR LATCH MECHANISMS	MIL L-7870	500 HRS
4	SEAT TRACK ROLLERS, STOP PINS AN0 REAR SEAT LEG RETAINER (CLIP AND CAM)	AERO LUBRIPLATE, OR MAG-1, FISKE BROS REFINING CO, MIL-G-771 1	100 HRS
5	SEAT LATCH STOP PIVOR POINT (CDPILDT)	MIL-L-7870	100 HRS

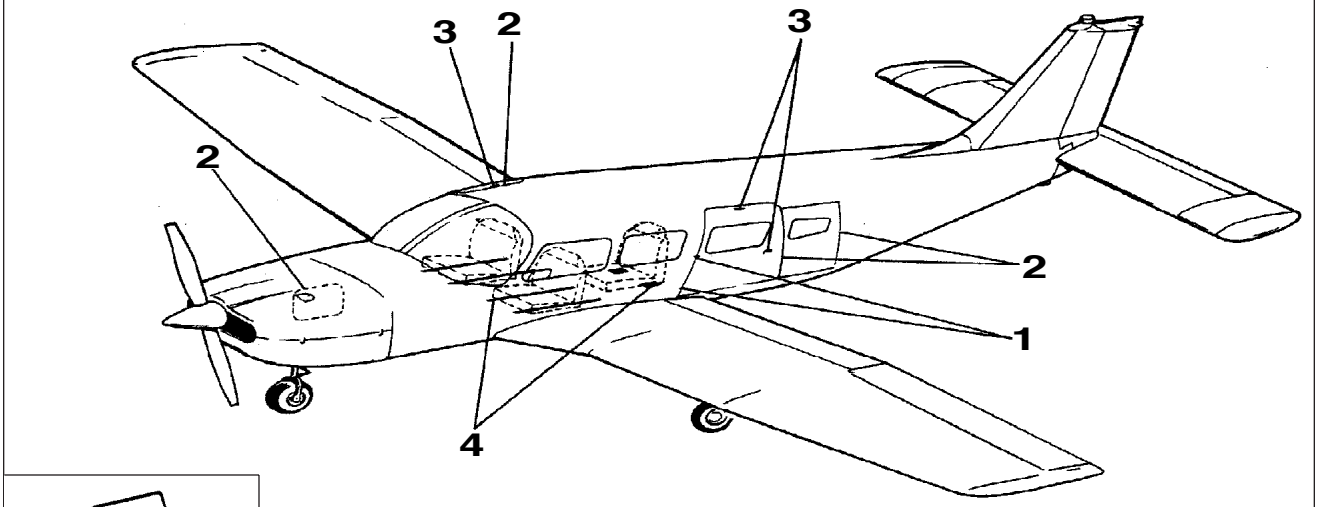

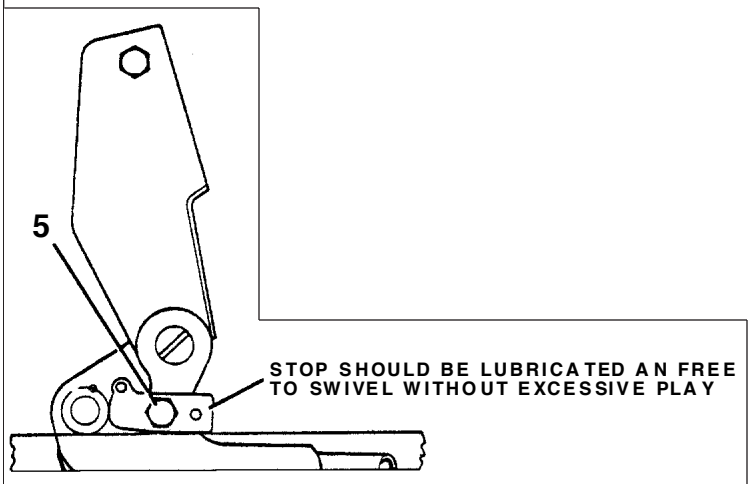

SPECIAL INSTRUCTIONS

Appply fluorocarbon dry lubricant to door seals at least once a month to pervent the seal from sticking, and improve sealing charactaristics

Cabin and Baggage Doors and Seat
Figure 8

A. SCHEDULED SERVICING (cont.)

(4) Lubrication Charts (cont.)

CHART 9
LUBRICATION CHART (Engine, Propeller, and Control Pivot Points)

COMPONENT	LUBRICANT	FREQUENCY
1. ENGINE SUMP	MIL-L-6082 LUBRICATING OIL, AIRCRAFT RECIPROCATING ENGINE (PISTON) GRADE AS SPECIFIED, SAE 50 ABOVE 60° F AIR TEMP., SAE 40 30° TO 90° F AIR TEMP., SAE 30 0° TO 70° F AIR TEMP., SAE 20 BELOW 10° F AIR TEMP.	50 HRS
2 . CARTRIDGE TYPE OIL FILTERS		50 HRS
3. AIR FILTERS		50 HRS
4 PROPELLER ASSEMBLY	MIL-G-23827	100 HRS
5. ENGINE CONTROL AND ENVIRONMENTAL CONTROL PIVOT POINTS	MIL-L-7870	100 HRS
6. FRESH AIR VENT SHAFTS	MIL-G-7711	500 HRS
7. ALTERNATOR IDLER PULLEY BEARING	MIL-G-81322	100 HRS

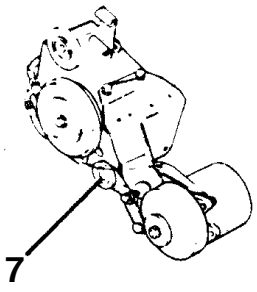

SKETCH B

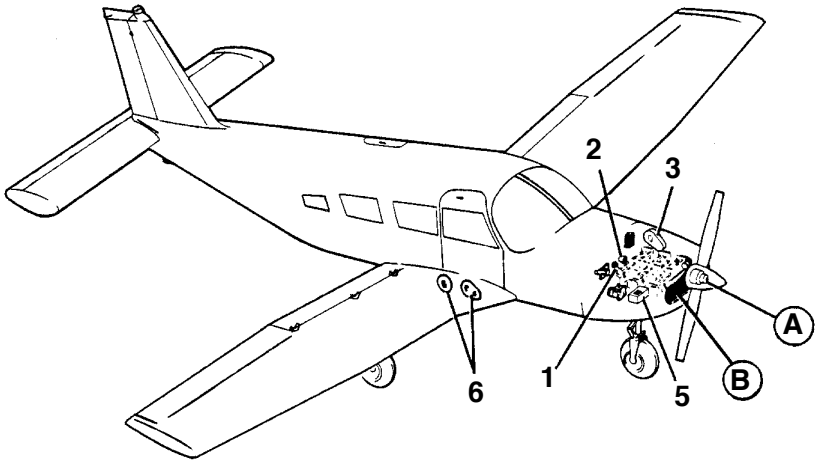

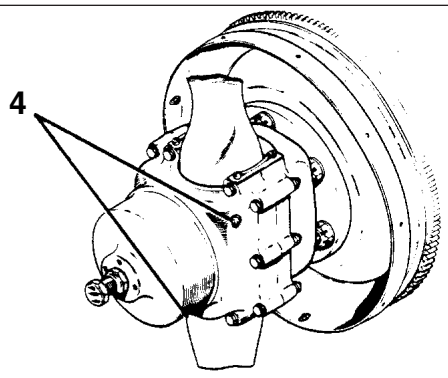

SKETCH A

SPECIAL INSTRUCTIONS

1. AIR FILTER - TOCLEAN FILTER,TAP GENTLYTO REMOVE DIRT PARTICLES. DO NOT BLOW OUT WITH COMPRESSED AIR OR USE OIL. REPLACE FILTER IF PUNCTURED OR DAMAGED.
2. INTERVALS BETWEEN OIL CHANGES CAN BE INCREASED AS MUCH AS 100 %/ ON ENGINES EQUIPPED WITH FULL FLOW (CARTRIDGE TYPE) OIL FILTERS, PROVIDED THE ELEMENT IS REPLACED EACH 50 HOURS OF OPERATION
3. PROPELLER - REMOVE ONE OF THE TWO GREASE FITTINGS FOR EACH BLADE. APPLY GREASE THROUGH FITTING UNTIL FRESH GREASE APPEARS AT HOLE OF REMOVED FITTING.

NOTE

SEE LYCOMING SERVICE INSTRUCTIONS NO. 1014 FOR USE OF DETERGENT OIL.

Engine, Propeller, and Control Pivot Points
Figure 9

A. SCHEDULED SERVICING (cont.)

(4) Lubrication Charts (cont.)

CHART 10
LUBRICATION CHART (Backup Extender and Fuel Selector)

COMPONENT	LUBRICANT	FREQUENCY
1. DIAPHRAGM SHAFT AND BUSHING	MIL-L-7870	100 HRS
2. BACK UP EXTENDER LINKS AND CONTROL ARM PIVOT POINTS	MIL-L-7870	100 HRS
3. BACK-UP EXTENDER SPRLNG ATTACHMENT POINTS	MIL-L-7870	100 HRS
4. FUEL SELECTOR LINKAGE	MIL-L-7870	100 HRS
5. FUEL SELECTOR VALVE COVER PLATE	FLUOROCARBON RELEASE AGENT DRY LUBRICANT MS-122. MIL-L-60326	100 HRS

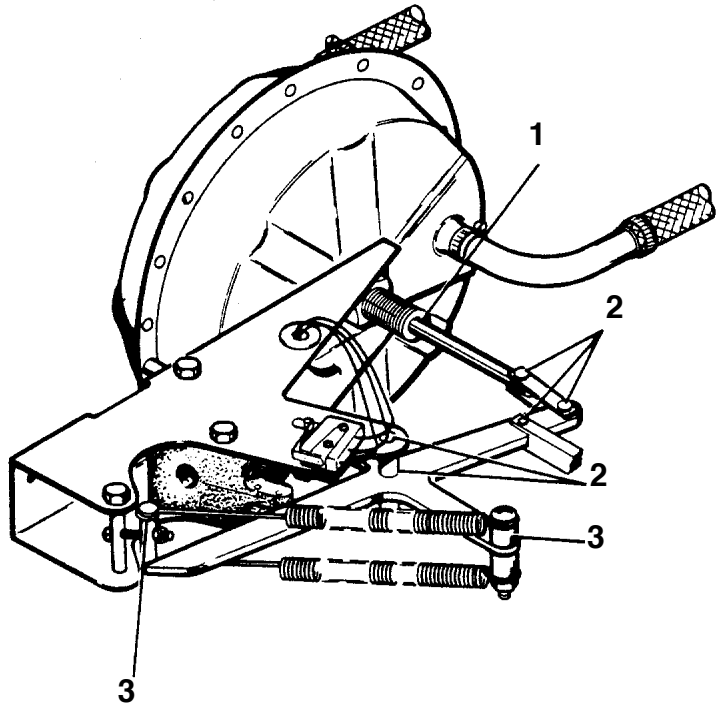

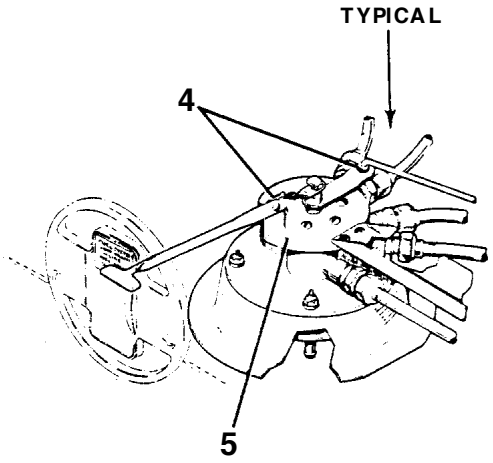

SPECIAL INSTRUCTIONS

1. **Diaphragm shaft and bushing - soft film silicon compound (MIL-C-215667) is recommended for use when operating at temperatures below 20*F.**
2. **Fuel selector valve - Lubricate area where detent ball moves across cover plate (on external detent valves only)**

Backup Extender and Fuel Selector
Figure 10

INTENTIONALLY LEFT BLANK

GRIDS 1G14 THROUGH 1G16
INTENTIONALLY LEFT BLANK

CHAPTER

20

STANDARD PRACTICES - AIRFRAME

THIS PAGE INTENTIONALLY LEFT BLANK

CHAPTER 20 - STANDARD PRACTICES/AIRFRAME

TABLE OF CONTENTS/EFFECTIVITY

CHAPTER SECTION	SUBJECT	GRID NO.	EFFECTIVITY
20-00-00	STANDARD PRACTICES - AIRFRAME	1G19	July 1, 1993
20-00-00	General	1G19	July 1, 1993
20-00-00	Torque Wrenches	1G19	July 1, 1993
20-00-00	Method For Installing Rod End Bearings	1G20	July 1, 1993
20-00-00	Removing Cherrylock Rivet	1G21	July 1, 1993
20-00-00	Identification of Fluid Lines	1G22	July 1, 1993
20-00-00	Flareless Tube Assemblies	1G22	July 1, 1993
20-00-00	Electrical Bonding	1H1	July 1, 1993
20-00-00	Support Clamps	1H2	July 1, 1993

STANDARD PRACTICES - AIRFRAME.

A. General

This chapter contains general information pertaining to standard aircraft hardware installation and removal practices.

The information included will be very helpful if it is referred to on a regular basis.

If non-destructive testing is needed after repair of 4130 steel, use the magnaflux method.

Testing and inspecting of aluminum castings and machined aluminum parts may be done by the dye penetrant method.

Usually, a good visual inspection with a 10X magnifying glass will show any damage or defect in a repair that is of a significant nature.

B. Torque Wrenches

Torque wrenches should be checked daily and calibrated by means of weights and a measured lever arm to make sure that inaccuracies are not present. Checking one torque wrench against another is not sufficient and is not recommended. Some wrenches are quite sensitive as to the way they are supported during a tightening operation. Any instructions furnished by the manufacturer must be followed explicitly.

When it is necessary to use a special extension or adapter wrench together with a torque wrench, a simple mathematical equation must be worked out to arrive at the correct torque reading. Following is the formula to be used: (Refer to Figure 1.)

T = Torque desired at the part.
A = Basic lever length from center of wrench shank to center of handle or stamped on wrench or listed for that model wrench.
B = Length of adapter extension, center of bolt to center of shank.
C = Scale reading needed to obtain desired torque (T).

$$\text{The formula:} \quad C = \frac{A \times T}{A + B}$$

EXAMPLE: A bolt requires 30 foot pounds and a 3 inch adapter (one-quarter of a foot or 0.25') is needed to get at it. You want to know what scale reading it will take on a one-foot lever arm wrench to obtain the 30 foot pounds at the bolt.

$$C = \frac{1 \times 30}{1 + 0.25} \quad \text{or} \quad C = \frac{30}{1.25}$$

Remember, the 3 inch adapter must be projecting 3 inches straight along the wrench axis. In general, avoid all complex assemblages or adapters and extensions of flex joints.

STANDARD PRACTICES - AIRFRAME. (cont.)

B. Torque Wrenches (cont.)

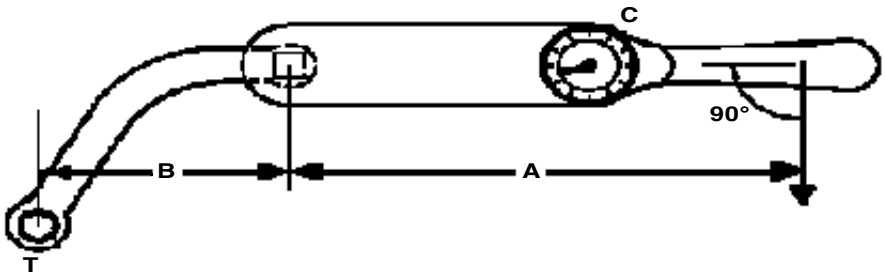

Torque Wrench Formula
Figure 1

C. Method For Installing Rod End Bearings

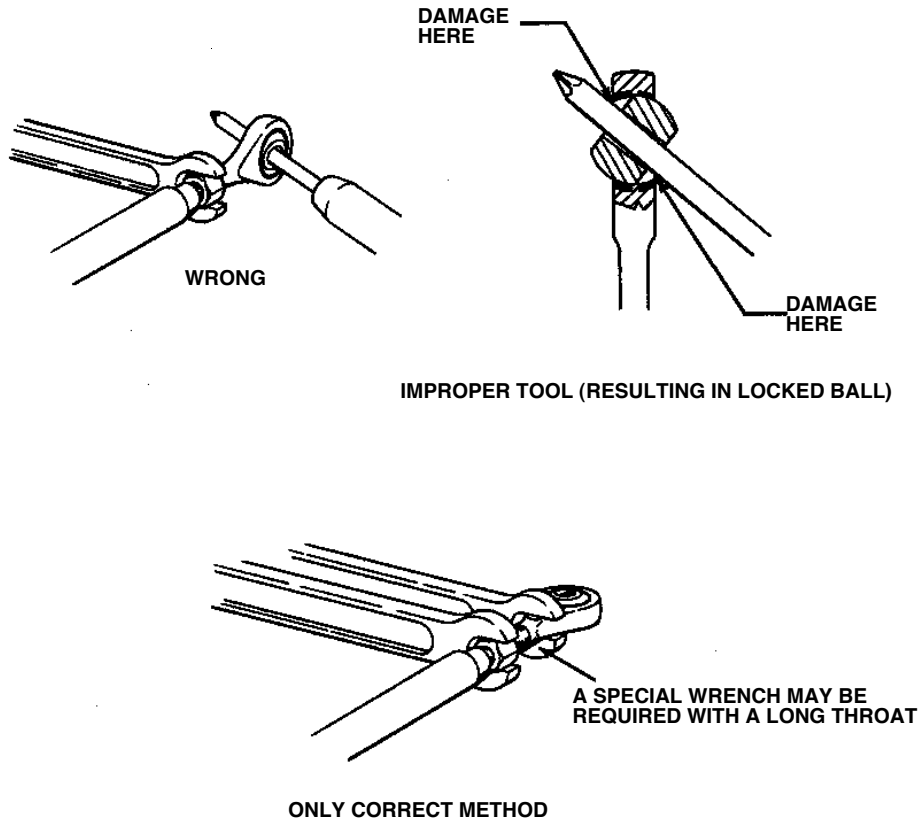

Installing Rod End Bearings
Figure 2

STANDARD PRACTICES - AIRFRAME. (cont.)

D. Removing Cherrylock Rivets.
Use following procedure to remove cherrylock rivets

(1) To remove the lock in thick material, use a tapered steel drift pin to drive out rivet stem. (See Figure 3, View 1.)

— CAUTION —

Driving out the locked stem of rivets installed in thin material may damage the material.

— NOTE —

Drilling completely through the rivet sleeve, when removing rivets, tends to enlarge hole.

(2) To remove rivet lock in thin material, drill away tapered portion of stem to destroy the lock. Use a small center drill bit on top of the rivet stem to provide a guide for a larger bit. (See Figure 3, Views 2 and 3.)
(3) Pry remainder of locking collar out of rivet head with a drift pin. (See Figure 3 View 3.)
(4) Drill almost, but not completely, through head of rivet. Use a drill bit the same size as the rivet shank. (See Figure 3, View 4.)
(5) Use a drift pin as a lever to break off rivet head. (See Figure 3, View 5.)
(6) Drive out remaining rivet shank with a pin having same diameter as rivet shank. (See Figure 3, View 6.)

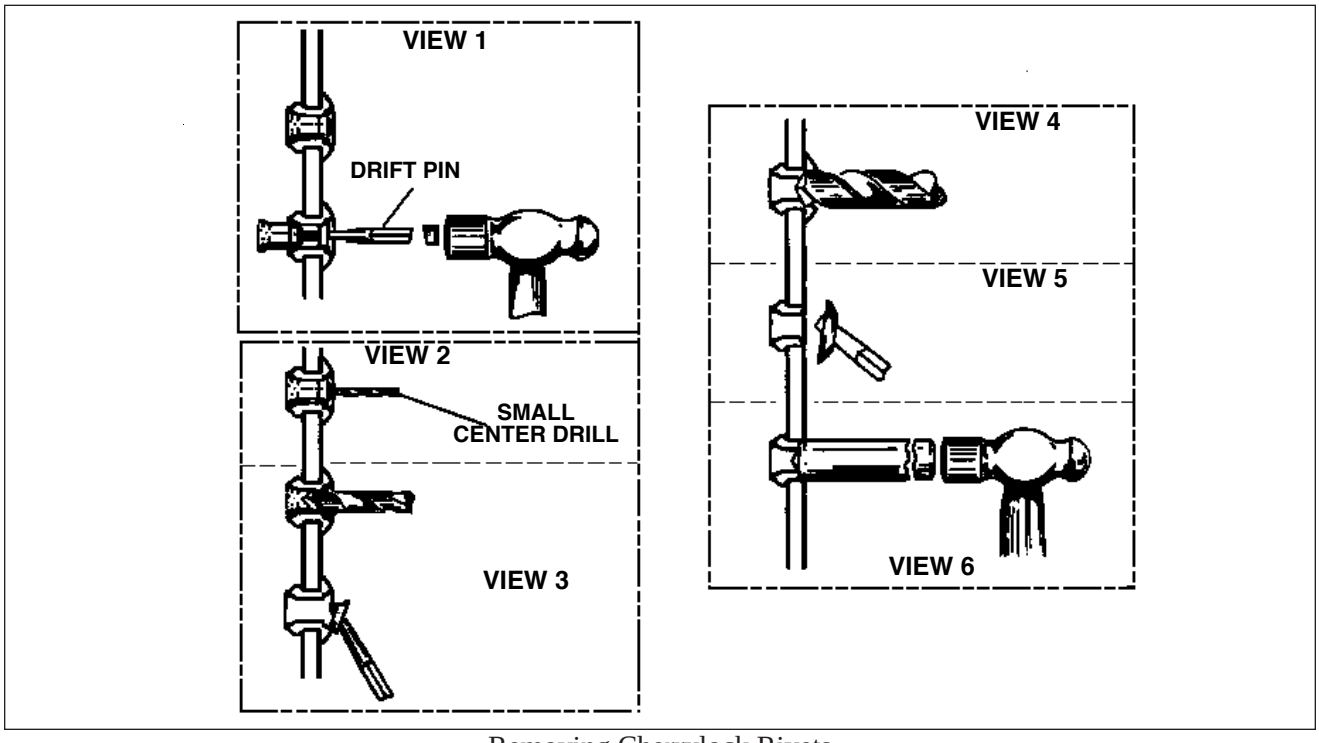

Removing Cherrylock Rivets
Figure 3

STANDARD PRACTICES - AIRFRAME (cont.)

E. Identification of Fluid Lines (Refer to Figure 4, page 20-5)
Aircraft fluid lines are identified by color code markers, words and geometric symbols. The markers identify each line`s function, content, primary hazard, and the direction of fluid flow.

Most fluid lines are marked with 1 inch tape or decals. Paint is used on lines in the engine induction system.

Certain lines may also be identified as to the specific function within a system. For example: DRAIN, VENT, PRESSURE or RETURN.

Lines conveying fuel may be marked FLAM. Lines containing toxic materials are marked TOXIC. Line containing physically dangerous materials, such as oxygen, nitrogen, or freon, are marked PHDAN.

The aircraft and engine manufacturer is responsible for the ***original*** installation of identification markers, Aircraft maintenance personnel are responsible for their replacement when it becomes necessary.

Tapes, paint, tags and decals are placed on both ends of a line and at least once in each compartment through which the line runs. Identification markers are also placed immediately adjacent to each valve, regulator, filter or other accessory within a line.

F, Flareless Tube Assemblies.
The use of flareless tube fittings eliminates all tube flaring. An operation, referred to as presetting, is necessary prior to installing a new flareless tube assembly. Presetting is performed as follows:

(1) Cut tube to correct length. Ensure ends are perfectly square. Deburr inside and outside of tube. Slip nut, then sleeve, over the tube. (refer to Figure 5, step 1, page 20-6)
(2) Lubricate fitting and nut threads as specified in table contained in Figure 5, page 20-6.
(3) Place fitting in a vise (refer to Figure 5, step 2, page 20-6). Hold tubing firmly and squarely on seat in fitting. (Tube must bottom firmly in the fitting.) Tighten nut until cutting edge of sleeve grips tube. This point is determined by slowly turning tube back and forth while tightening nut. When tube no longer turns, nut is ready for final tightening.
(4) Final tightening depends upon type and size of tubing. On aluminum alloy tubing up to and including half inch outside diameter, tighten nut from 1 to 1-1/6 turns. On aluminum alloy tubing over half inch outside diameter, or steel tubing, tighten nut from 1-1/6 to 1-1/2 turns.
(5) After presetting the sleeve, disconnect tubing from fitting and check the following points (refer to Figure 5, step 3, page 20-6):
    (a) Tube extends 3/32 to 1/8 inch beyond sleeve pilot to prevent blow off.
    (b) Sleeve pilot contacts tube. A maximum clearance of 0.005 inch for aluminum alloy tubing, or 0.015 inch for steel tubing, is acceptable.
    (c) A slight collapse of tube at sleeve cut is permissible. No movement of sleeve pilot, except rotation, is permissible.

STANDARD PRACTICES - AIRFRAME (cont.)

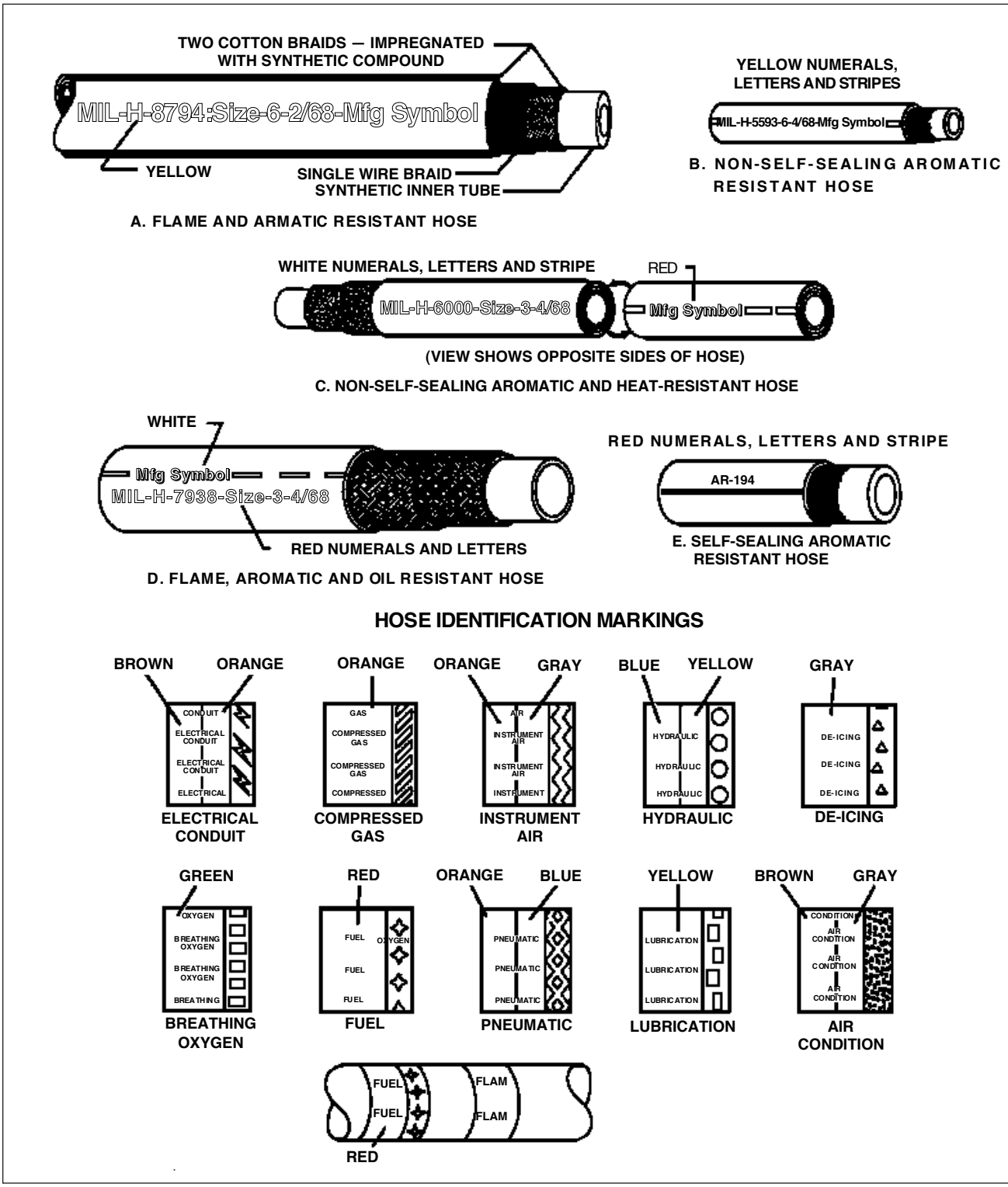

Hose, Tube and Line Markings
Figure 4

STANDARD PRACTICES - AIRFRAME (cont.)

TUBING SYSTEM	LUBRICANT
HYDRAULIC	MIL - H - 5606
FUEL	MIL - H - 5606
OIL	SYSTEM OIL
PNEUMATIC	MIL - L 4343
(1) OXYGEN	MIL - T 5542

(1) CAUTION - DO NOT USE OIL OR GREASE

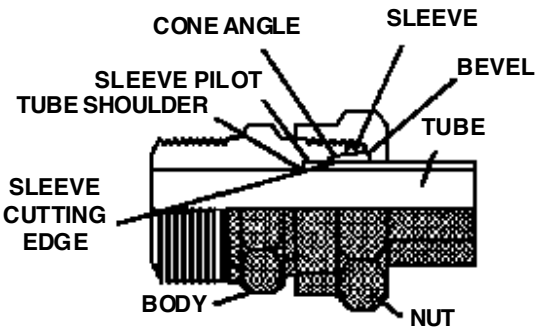

FLARELESS TUBE FITTING

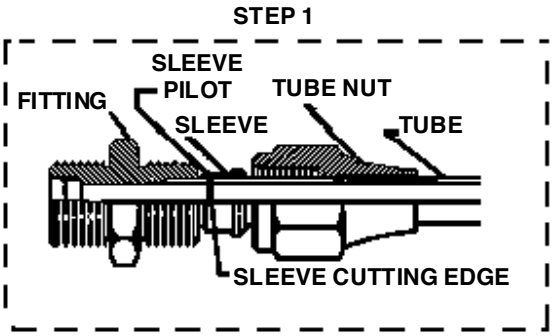

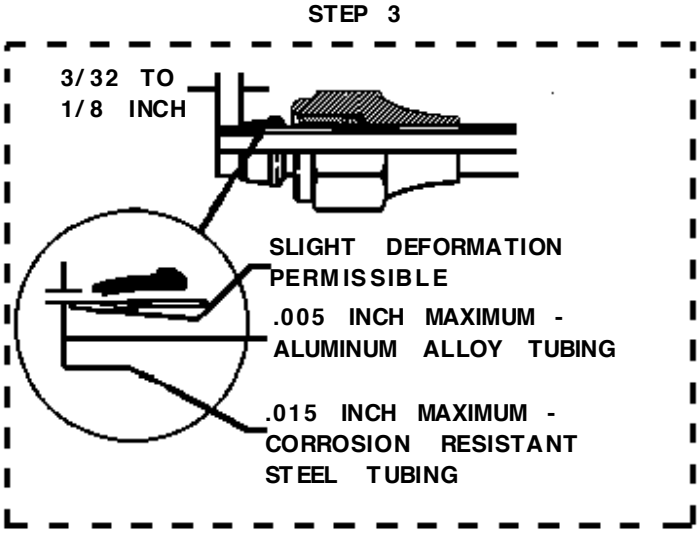

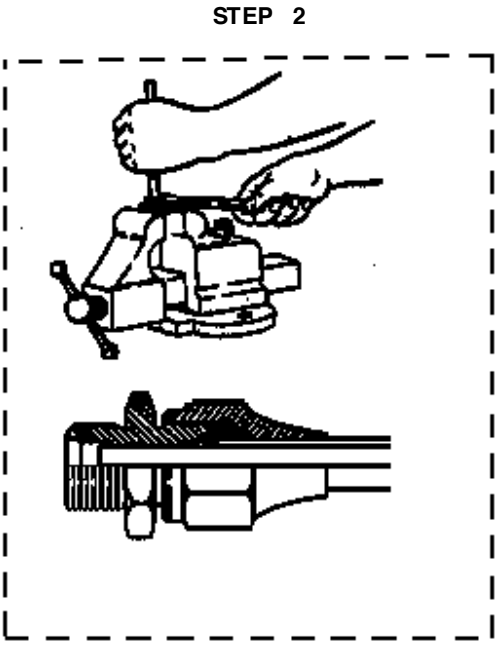

Flareless Tube Fittings
Figure 5

STANDARD PRACTICES - AIRFRAME (cont.)

G. Electrical Bonding

Aircraft electrical bonding should be accomplished or verified to establish a maximum allowable resistance value. See Chart 2001 for values.

All electrical, electronic equipment and components shall be installed in such a manner as to provide a continuous low resistance path from the equipment enclosure to the airplane structure.

Parts shall be bonded directly to the primary structure rather than to other bonded parts.

All parts shall be bonded with as short a lead as possible.

All bonding surfaces shall be cleaned prior to the installation of the bonded joint.

All nuts used in bonding shall be of the self-locking type. (Do Not use fiber-locking type).

All electrical bonding shall be accomplished without affecting the structural integrity of the airframe.

Bond connections shall be secure and free from corrosion.

Self Tapping Screws will not be used for bonding purposes.

CHART 1. MAXIMUM ALLOWABLE RESISTANCE VALUES

ITEM TO BE ELECTRICALLY BONDED	MAXIMUM ALLOWABLE RESISTANCE VALUE IN OHMS
Static Wicks	0.0005
Starter/Alternator to Engine	0.0025
All Electrical/Electronic Equipment Ground Return to Primary Structure	0.0025
Instruments	0.0100
Battery to Primary Structure	0.0025
Radio Racks to Primary Structure	0.0025
R.F.I. Noise Filters	0.0025

STANDARD PRACTICES - AIRFRAME (cont.)

H. Support Clamps.

Support clamps are used to secure the various lines to the airframe or power plant assemblies. Several type of support clamps are used for this purpose. The rubber cushioned and plain are the most commonly used clamps. The rubber cushioned clamp is used to secure lines subject to vibration; the cushioning prevents chafing of the tubing. The plain clamp is used to secure lines in areas not subject to vibration.

A teflon cushioned clamp is used in areas where the deteriorating effects of hydraulic fluid or fuel is expected, however, because it is less resilient, it does not provide as good a vibration damping effect as other cushion materials.

Use bonded clamps to secure metal hydraulic, fuel and oil lines in place. Unbonded clamps should be used only for securing wiring. Remove any paint or anodizing from the portion of the tube at the bonding clap location. Make certain that clamps are of the correct size. Clamps or supporting clips smaller than the outside diameter of the hose may restrict the flow of fluid through the hose.

All plumbing lines must be secured at specified intervals. The maximum distance between supports for rigid fluid tubing is shown in Chart 2001.

CHART 2. MAXIMUM DISTANCE BETWEEN SUPPORTS FOR FLUID TUBING

TUBE OD (IN.)	DISTANCE BETWEEN SUPPORTS (IN.)	
	ALUMINUM ALLOY	STEEL
1/8	9-1/2	11-1/2
3/16	12	14
1/4	13-1/2	16
5/16	15	18
3/8	16-1/2	20
1/2	19	23
5/8	22	25-1/2
3/4	24	27-1/2
1	26-1/2	30

INTENTIONALLY LEFT BLANK

INTENTIONALLY LEFT BLANK

CHAPTER

21

ENVIRONMENTAL SYSTEMS

CHAPTER 21 - ENVIRONMENTAL SYSTEM

TABLE OF CONTENTS/EFFECTIVITY

CHAPTER SECTION	SUBJECT	GRID NO.	EFFECTIVITY
21-00-00	ENVIRONMENTAL SYSREMS	1H8	July 1, 1993
21-00-00	General	1H8	July 1, 1993
21-40-00	HEATING	1H10	July 1, 1993
21-40-00	Description and Operation	1H10	July 1, 1993
21-40-00	Heater Maintenance	1H10	July 1, 1993
21-40-00	Heat, Defrost,and Overhead Vent System	1H11	July 1, 1993
21-50-00	COOLING	1H14	July 1, 1993
21-50-00	Overhead Vent System	1H14	July 1, 1993
21-50-00	Optional Overhead Vent Blower	1H14	July 1, 1993
21-50-00	Removal of Vent Blower Assembly	1H14	July 1, 1993
21-50-00	Disassembly of Vent Blower	1H14	July 1, 1993
21-50-00	Assembling of Vent Blower	1H14	July 1, 1993
21-50-00	Installing Vent Blower	1H15	July 1, 1993
21-50-00	Air Conditioning	1H16	July 1, 1993
21-50-00	Description and Operation	1H17	July 1, 1993
21-50-00	Air Conditioning Troubleshooting	1H18	July 1, 1993
21-50-00	Servicing of Air Conditioner	1H23	July 1, 1993
21-50-00	Special Servicing Procedures	1I1	July 1, 1993
21-50-00	General Refrigeration System Procedures	1I1	July 1, 1993
21-50-00	Service Valves	1I2	July 1, 1993
21-50-00	Service Valve Replacement	1I3	July 1, 1993
21-50-00	Test Gauge Manifold Set	1I4	July 1, 1993
21-50-00	Checking the System for Leaks	1I6	July 1, 1993
21-50-00	Leak Check - Method One	1I6	July 1, 1993
21-50-00	Leak Check - Method Two	1I7	July 1, 1993
21-50-00	Discharging System	1I7	July 1, 1993
21-50-00	Evacuating System	1I8	July 1, 1993
21-50-00	Charging The System	1I10	July 1, 1993
21-50-00	Charging Stand Method	1I10	July 1, 1993
21-50-00	Using the Airplane Compressor to Charge the System	1I11	July 1, 1993
21-50-00	Addition of Partial Charge to System	1I13	July 1, 1993
21-50-00	Component Service	1I13	July 1, 1993
21-50-01	Compressor Service	1I13	July 1, 1993
21-50-02	Compressor Removal	1I14	July 1, 1993
21-50-03	Compressor Installation	1I14	July 1, 1993
21-50-04	Checking Compressor Oil	1I15	July 1, 1993
21-50-05	Replacing Compressor Drive Belt	1I16	July 1, 1993

CHAPTER 21 - ENVIRONMENTAL SYSTEM

TABLE OF CONTENTS/EFFECTIVITY

CHAPTER SECTION	SUBJECT	GRID NO.	EFFECTIVITY
21-50-00	COOLING (cont)		
21-50-00	Component Service (cont)		
21-50-00	Magnetic Clutch Removal	1I18	July 1, 1993
21-50-00	Magnetic Clutch Installation	1I19	July 1, 1993
21-50-00	Refrigerant Lines and Routing	1I19	July 1, 1993
21-50-00	Receiver-Dehydrator	1I19	July 1, 1993
21-50-00	Removal	1I19	July 1, 1993
21-50-00	Installation	1I20	July 1, 1993
21-55-00	Condenser	1I20	July 1, 1993
21-55-00	Removal	1I20	July 1, 1993
21-55-00	Installation	1I20	July 1, 1993
21-50-00	Condenser Door Actuator	1I21	July 1, 1993
21-50-00	Condenser Assembly	1I22	July 1, 1993
21-50-00	Condenser Assembly Rigging	1I22	July 1, 1993
21-50-00	Expansion Valve	1I22	July 1, 1993
21-50-00	Removal	1I23	July 1, 1993
21-50-00	Installation	1I23	July 1, 1993
21-50-00	Evaporator	1I23	July 1, 1993
21-50-00	Removal	1I23	July 1, 1993
21-50-00	Installation	1I24	July 1, 1993
21-50-00	Pressure Relief Switch (Ranco)	1I24	July 1, 1993
21-50-00	Air Conditioning Electrical Installation	1J1	July 1, 1993
21-50-00	Adjustment of Throttle Switch	1J1	July 1, 1993
21-50-00	Fuse Replacement	1J1	July 1, 1993

ENVIRONMENTAL SYSTEMS

A. General.

This chapter contains instructions for operating, servicing, inspection and repair of the Environmental System components installed in this airplane.

PAGE INTENTIONALLY LEFT BLANK

HEATING

A. Description and Operation

— CAUTION

When cabin heat is operated, heat duct surface becomes hot. This could result in burns if arms or legs are placed too close to heat duct outlets or surface.

Fresh air is ducted from the left engine baffle to the heater muff which is attached to the muffler. The heated air is then ducted to the valve box mounted on the fire wall. When the valve is open, heated air enters the heat ducts located along each side of the center console. Outlets in the heat ducts are located at each seat location. Airflow to the rear seats can be regulated by controls in the heat ducts located between the front seats. The temperature of the cabin is regulated by the heater control located on the right side of the instrument panel.

Defrosting is accomplished by heat outlets located on the right and left side of the cowl cover. Heated air is ducted directly from the heater valve box to the defroster shut-off valves at the fire wall and then to the defroster outlets. The airflow is regulated by a defroster control located below the heat control.

To aid air distribution, the cabin air is exhausted overboard by an outlet located on the bottom of the fuselage. Cabin exhaust outlets are located below and aft of the rear seats.

B. Heater Maintenance

If the exhaust manifold should become defective, carbon monoxide fumes may be discharged into the cabin area. Therefore it is imperative that the exhaust manifold be inspected regularly. Refer to Chapter 78 for inspection of exhaust systems. The heater muff must be removed in order to inspect the manifold assembly. Check the operation of the push-pull controls to insure the valve doors function properly. When the controls are pulled out, the door should be completely open to permit full airflow. When the controls are pushed in, the valves should close off all air passage and vent the air into the engine compartment. Refer to Figure 21-1 or 21-2 for an illustration of the heater system.

HEATING (cont.)

C. Heat, Defrost,and Overhead Vent System

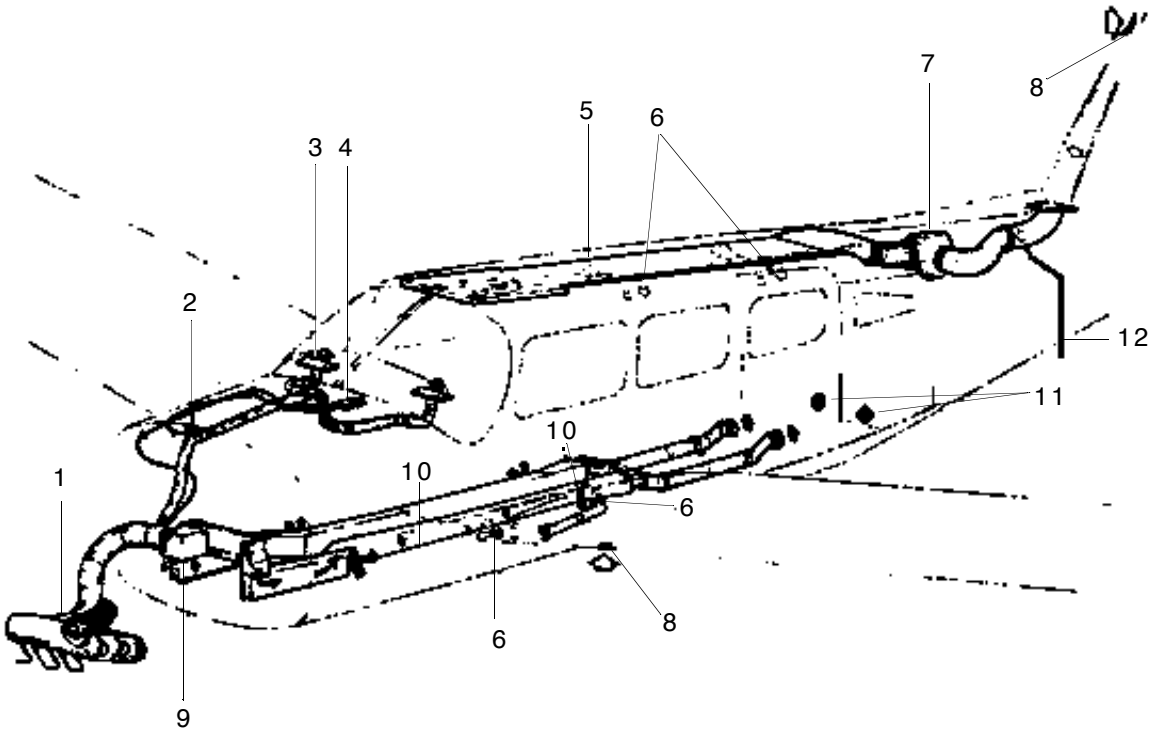

1. HEAT SHROUD
2. DEFROSTER VALVE
3. DEFROSTER OUTLET
4. HEAT AND DEFROSTER AIR CONTROLS
5. OVERHEAD FRESH AIR CONTROLS
6. FRESH AIR OUTLET
7. OVERHEAD VENT BLOWER
8. FRESH AIR INLET
9. AIR BOX
10. CABIN HEAT OUTLET
11. CABIN SIR EXHAUST
12. DRAIN TUBE

Cabin Heater, Defrosters and Fresh Air System (PA-32R-301) (Sheet 1 of 2)
Figure 1

HEATING (cont.)

C. Heat, Defrost,and Overhead Vent System (cont.)

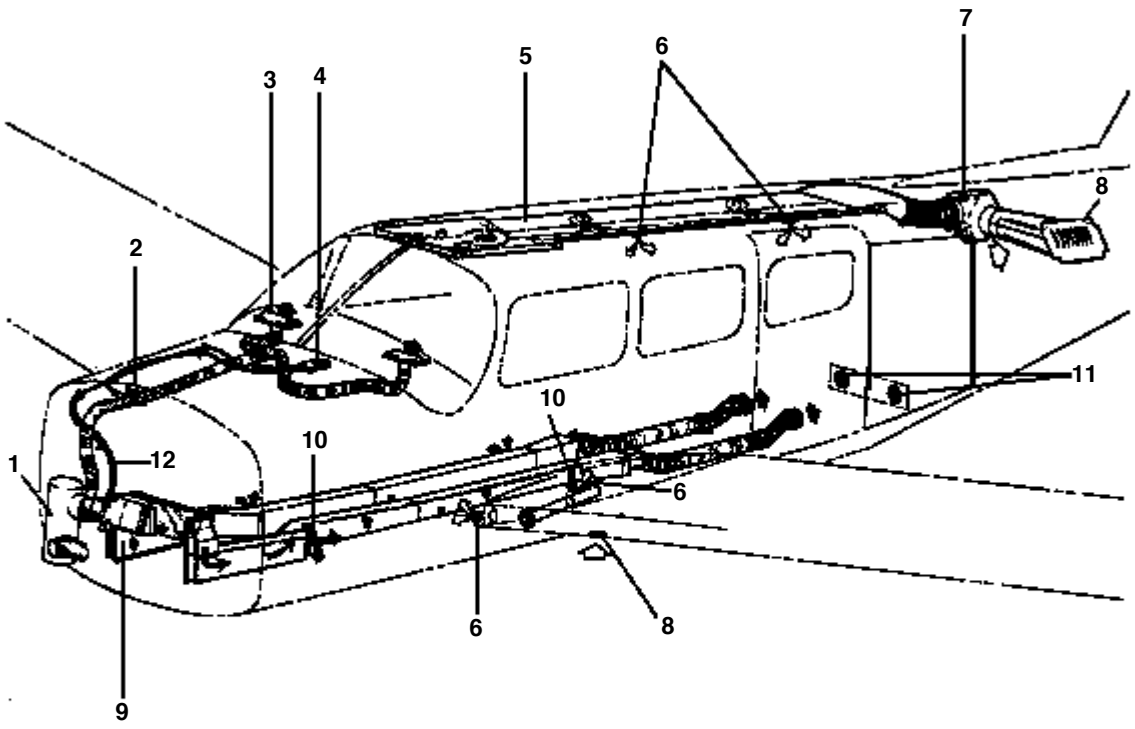

1. HEAT SHROUD
2. DEFROSTER VALVE
3. DEFROSTER OUTLET
4. HEAT AND DEFROSTER AIR CONTROLS
5. OVERHEAD FRESH AIR DUCT
6. FRESH AIR OUTLET
7. OVERHEAD VENT BLOWER
8. FRESH AIR INLET
9. AIR BOX
10. CABIN HEAT OUTLET
11. CABIN AIR EXHAUST
12. CONTROL CABLE HEAT SHIELD

Cabin Heater, Defrosters and Fresh Air System (PA-32R-301T) (Sheet 2 of 2)
Figure 1

THIS PAGE INTENTIONALLY LEFT BLANK

COOLING

A. Overhead Vent System.

When the optional air conditioning system is not installed cabin ventilation and cooling is provided by an overhead vent system. (Refer to Figure 1.) Air enters an inlet located on the rear left side of the fuselage and is ducted through overhead ducting to the cabin. Air flow is controlled by a flapper valve positioned in the duct just forward of F.S. 220. A CABIN AIR control knob, located in the cockpit overhead duct, positions the flapper valve to allow fresh air to enter the cabin or to stop the flow of air.

(1) Optional Overhead Vent Blower
An optional blower will force air through the overhead vent system whenever desired. It is mounted aft of the close-out panel underneath the top of the fuselage and is connected to the overhead vent system. The vent blower draws air in from the left rear side of the fuselage and forces it through the ducting. A three position blower switch on the instrument panel controls the two speed blower.

(2) Removal of Vent Blower Assembly.
- (a) Remove the access door from the aft wall of the baggage area.
- (b) With the master switch off, disconnect the plug assemblies at the blower assembly.
- (c) Remove the inlet and outlet hoses from the blower assembly by removing the clamps.
- (d) Remove the screws, washers and nuts that secure the blower assembly to the hanger braces.
- (e) Remove the screws and washers which secure the blower assembly to the retainer and hangers.
- (f) Remove the blower assembly from the aircraft.

(3) Disassembly of Vent Blower
- (a) Remove the hose duct from the forward edge of the blower assembly by removing the nuts, washers and screws.
- (b) Remove the cover from the blower assembly by removing the nuts, washers and screws.
- (c) Remove the blower fan from the motor shaft by removing the set screw.
- (d) For removal of the motor, proceed as follows:
  - 1 Separate the plate from the motor cover by carefully drilling out the connecting rivets.
  - 2 Cut the motor wires at the edge of the receptacle and plug and remove the wire ends from the blocks.
  - 3 Remove the motor from the mounting plate by removing the nuts, washers and bolts.

(4) Assembling Vent Blower
- (a) Mount motor on plate and secure with bolts, washers, and nuts. Check that motor nuts are snug and shaft spins freely.
- (b) Position cover over motor plate with motor wires protruding through cover grommet.
- (c) With holes in cover matching holes in motor plate, secure the two parts together with rivets.
- (d) Fill any opening left where wires are pass through cover grommet with PRC-5000 sealant.
- (e) Install wires in plug and receptacle.
- (f) Position blower fan on motor shaft and secure with set screw.
- (g) Position hose duct on blower assembly and secure with screws, washers, and nuts. Install screws with heads ***inside*** duct.
- (h) Clean old sealant from all surfaces where duct attaches to blower assembly.
- (i) Seal all surfaces where duct attaches to blower assembly with PRC-5000 white rubber caulking.

COOLING

A. Overhead Vent System.

(5) Installing Blower Assembly

(a) Position blower assembly in hangers and retainer. Install washers and screws.
(b) Secure blower assembly to hanger braces nuts, washers, and screws.
(c) Seal all hose joints with Arno No. C-520 wrap tape.
(d) Install inlet and outlet hoses. Secure with clamps.
(e) Ensure master switch is OFF. Connect plug and receptacles to blower.
(f) Check blower for proper operation.
(g) Install access door to aft wall of baggage area. Secure with attaching hardware.

Chart 6
Blower System Wire Color Codes

	MOTOR WIRES		AIRCRAFT WIRES	
	Pin Nos.	YY75062 ESB - Universal Elect. Company	Aircraft Harness	Pin Nos.
Ground	2	Brown	AC26A	2
Low Speed	1	Yellow	Black	1
Medium Speed	2	Red	White	2
High Speed	1	Orange	Red	1

— NOTE —

Pin number 1 is at pointed side of plug and receptacle.

COOLING (cont.)

B. Air Conditioning

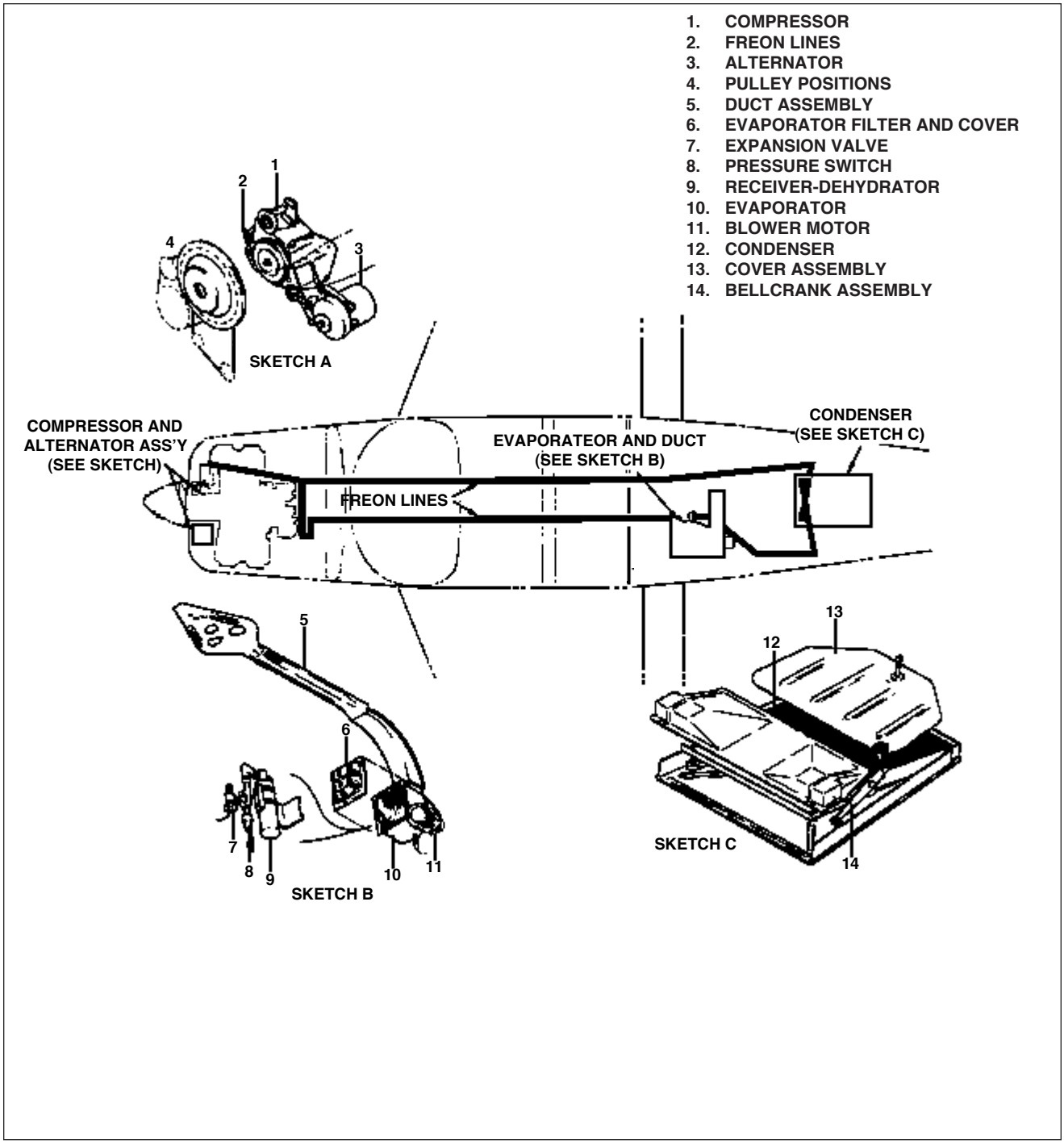

Air Conditioning System Installation
Figure 2

COOLING (cont.)

B. Air Conditioning (cont.)

(1) Description and Operation. (Refer to Figure 2)

This installation consists of a compressor with its special brackets and associated hardware, an evaporator, a condenser, a receiver-dehydrator, circulating fan, thermal expansion valve, and related plumbing.

The evaporator filters, dehumidifies and cools the air. The evaporator is mounted in a fabricated housing along with the receiver-dehydrator, circulating fan, thermal expansion valve and related plumbing. This housing is located at the rear of the cabin, aft of the baggage area. The compressor is a two cylinder, piston type compressor which is supported by special brackets at the front of the engine. A V-belt connected to the engine ring gear drives the compressor through a magnetic clutch. The condenser is installed on a hinge mounted door that is located on the bottom portion of the fuselage tail section. The condenser door is hinge mounted to allow extension into the airstream during system operation. The condenser door is electrically activated to provide the following positions, (system on - fully extended; system off - fully retracted).

The system is protected by a Ranco type pressure switch which automatically controls the condenser maximum head pressure by temporarily de-clutching the compressor in the event the pressure becomes excessively high. The controls are located on the aircraft instrument panel adjacent to the heater and defroster levers, and consist of an Air Conditioning control, a fan control to govern the cold air velocity, and a temperature control.

The system is such that there is no increase in drag to the aircraft during its take-off flight conditions. During maximum power demands the compressor is de-clutched and the condenser door is automatically retracted.

The air conditioning system in this aircraft is a recirculating, independent unit. It filters, dehumidifies and cools the air as it cycles through the evaporator. The unit is operated from controls mounted on the right side of the instrument panel. The air conditioning master switch has two positions, ON-OFF. When the AIR COND position is selected the compressor clutch engages, the condenser scoop opens and the circulating fan is turned on. The temperature is controlled by a thermostat operated by the temperature control selector. A two position fan switch (LOW-HIGH) operates the blower. The fan may be operated to circulate air without using the air conditioning unit.

The air conditioning system uses Refrigerant 12. The refrigerant enters the compressor as a vapor. The compressor pressurizes the heat-laden vapor until its pressure and heat reach a point much hotter than the outside air. The compressor then pumps the vapor to the condenser where it cools and changes to a liquid. The liquid then passes to the receiver-dehydrator. Its function is to filter, remove any moisture and insure a steady flow of liquid refrigerant into the evaporator through the expansion valve. The expansion valve is a temperature controlled metering valve which regulates the flow of the liquid refrigerant to the evaporator. The evaporator absorbs the heat from the air passing over the coils. From the evaporator the refrigerant vapor returns to the compressor where the cycle is repeated.

— NOTE —

The air conditioning system should be operated at least once a month to prevent sticking valves and keep the system lubricated.

COOLING (cont.)

C. Air Conditioner Troubleshooting.

Probable troubles peculiar to the air conditioner system components covered in this chapter are listed in Chart 1, along with their probable causes and suggested remedies. After the trouble has been corrected, check the entire system for security and operation of its components.

— CAUTION —

Environmental regulations may require use of a collection system when necessary to evacuate freon from system

— NOTE —

Check all environmental regulations for your local area before servicing air conditioning system

CHART 1

Air Conditioner Troubleshooting (Sheet 1 of 5)

Gauge Indication	Probable Causes	Remedy
High discharge pressure	Overcharge of refrigerant	Purge excess refrigerant.
	Air in system.	Check for leaks. Bleed charge from system. Evacuate and recharge system
	Overheated condenser due to blocking air passage.	Clean bugs and dirt from condenser fins. Straighten fins if bent.
	Flooded evaporator indicated by heavy frosting on suction line and compressor suction service valve.	Check that capillary bulb is securely clamped to suction line. If capillary bulb OK replace expansion valve
	Restriction in liquid line from condenser.	Check for kinked hoses and stopped up filter.
Low discharge pressure	Undercharge of refrigerant. Sight glass shows bubbles or foam.	Add refrigerant until bubbles disappear. Check system for leaks.
	Damaged compressor valves or dirt under valves.	Replace compressor.
	Damaged compressor. Worn or broken piston or piston rings.	Replace compressor.
Low suction pressure accompanied by icing of evaporator.	Low air supply through evaporator.	Repair blower or blower motor. Clean stoppage in air ducts.
	Very dirty evaporator fins and coils.	Clean and flush with water

COOLING (cont.)

C. Air Conditioner Troubleshooting (cont.)

CHART 1

AIR CONDITIONER TROUBLESHOOTING (Sheet 2 OF 5)

Gauge Indication	Probable Causes	Remedy
Low suction pressure. (Evaporator not cold enough) Suction gauge may read a vacuum indicating evaporator lacks refrigerant	Undercharge of refrigerant. Moisture freezing in expansion valve. Valve will show frost.	Add refrigerant. Install new dryer. Evacuate and recharge.
	Expansion valve inlet screen clogged. Inoperative expansion valve. Valve stuck closed or capillary bulb has lost its charge.	Remove screen. Clean with solvent and replace. Warm capillary by holding in hand. If suction pressure does not charge, replace expansion valve.
	Restriction anywhere in liquid line. Restriction will show frost.	Locate restriction and repair.
High suction pressure.	Capillary bulb clamp loose on suction line. Suction line shows frost.	Clean contact surfaces of suction line and cap bulb. Tighten clamp.
	Expansion valve not closing. Evaporator flooded. Suction line frosted to compressor.	Replace expansion valve.
	Compressor drive belt slipping.	Adjust belt tension.
	Magnetic clutch slipping.	Check electrical circuit for correct voltage to clutch coil. Clean clutch surfaces of oil.
	Leaking or broken compressor valves.	Replace compressor.
Condenser door will not close when air conditioner switch is in the “OFF” position.	Faulty K-2 relay.	Replace relay.

COOLING (cont.)

C. Air Conditioner Troubleshooting.

CHART 1.

AIR CONDITIONER TROUBLESHOOTING (Sheet 3 of 5)

Gauge Indication	Probable Causes	Remedy
	Electrical	
System produces no cooling.	Blown fuse in control head.	Replace fuse.
	Open circuit breaker.	Reset circuit breaker.
	Broken or disconnected electrical wire.connections;	Check all terminals for loose check wiring for hidden breaks.
	Broken or disconnected ground wire.	Check ground wire to see if loose, broken, or disconnected.
	Clutch coil burned out or disconnected.	Check current flow to clutch, replace if inoperative.
	Thermostat sensing element defective.	Check thermostat and cabin comfort control panel.
	Blower motor disconnected or burned out.	Check current flow to blower motor. Repair or replace if inoperative.
	Mechanical	
	Loose or broken drive belt. tighten to specifications.	Replace drive belts and/or
	Compressor partially or completely frozen.	Remove compressor for service or replacement.
	Expansion valve stuck in open position.	Replace expansion valve.
	Refrigeration	
	Broken refrigerant line.	Examine all lines for evidence of breakage by external stress or rubbing wear
	Leak in system.	Evacuate system, apply static charge, leak test system, and repair leak as necessary.
	Compressor shaft seal leaking.	Replace compressor.
	Clogged screen or screens in receiver dehydrator or expansion valve; plugged hose or coil.	Repair as necessary.

COOLING (cont.)

C. Air Conditioner Troubleshooting.

CHART 1

AIR CONDITIONER TROUBLESHOOTING (Sheet 4 of 5)

Gauge Indication	Probable Causes	Remedy
	Electrical	
System will not produce sufficient cooling.	Blower motor sluggish in operation.	Remove blower motor for service or replacement.
	Mechanical	
	Compressor clutch slipping.	Remove clutch assembly for service or replacement.
	Obstructed blower passage.	Examine entire passage for obstruction. Correct as necessary.
	Insufficient air circulation over condenser coils; fins clogged with dirt or bugs.	Clean condenser coils.
	Evaporator filter clogged.	Clean with cleaning solvent to remove cigarette tars.
	Refrigeration	
	Insufficient refrigerant in system.	Recharge system until bubbles disappear in receiver dehydrator and gauge readings stabilize to specifications.
	Clogged screen in expansion valve.	Purge system and replace expansion valve.
	Expansion valve thermal bulb has lost charge.	Purge system; replace expansion valve.
	Clogged screen in receiver dehydrator.	Purge system; replace receiver dehydrator.
	Excessive moisture in system.	Purge system. Replace receiver dehydrator.
	Air in system.	Purge, evacuate and charge system. Replace receiver dehydrator

COOLING (cont.)

C. Air Conditioner Troubleshooting.

CHART 1

AIR CONDITIONER TROUBLESHOOTING (Sheet 5 of 5)

Gauge Indication	Probable Causes	Remedy
	Electrical	
Excessively noisy system.	Defective winding or improper connection in compressor clutch coil.	Replace or repair as necessary.
	Mechanical	
	Loose or excessively worn drive belts.	Tighten or replace as required.
	Noisy clutch.	Remove clutch for service or replacement as necessary.
	Compressor noisy.	Check mountings and repair. as required. Remove compressor for service or replacement.
	Compressor oil level low.	Fill with correct amount of specified oil.
	Refrigeration	
	Excessive charge in system.	Discharge excess freon until high pressure gauge drops within specifications.
	Low charge in system.	Check system for leaks and repair. Charge system.
	Excessive moistue in	Replace dehydrator. Purge, evacuate, and charge system.

COOLING (cont.)

D. Servicing of Air Conditioner

The detection of system malfunction depends on the mechanic's ability to interpret gauge pressure readings into system problems. A system operating normally will have a low side gauge pressure reading corresponding with the temperature of refrigerant evaporating in the evaporator, allowing for a few degrees temperature ***rise*** due to loss in the tube walls and fins. The high side will have a gauge pressure corresponding with the temperature of the refrigerant condensing in the condenser, allowing for a few degrees temperature ***drop*** due to loss in the tube walls and fins.

Any deviation from normal indicates a malfunction within the system due to a faulty control device, obstruction, defective part, or improper installation.

Detection of system malfunction is made easier with the knowledge that the temperature and pressure of Refrigerant 12 is in close proximity between the pressures of twenty and eighty pounds per square inch (psi). A glance at the Temperature-Pressure Chart 2 will show that there is only a slight variation between the temperature and pressure of the refrigerant in the lower range.

It is correct to assume that for every pound of pressure added to the low side, a temperature increase of about one degree Fahrenheit takes place. For instance, a pressure of 23.8 on the chart indicates a temperature of 24˚F. A change of pressure of almost one pound to 24.6 psi gives us a temperature increase to 25˚F.

— NOTE —

For each 1,000 feet of elevation above sea level, the gauge readings will be about one inch of mercury or 1/2 psi higher than the chart indicates.

It must be pointed out that the actual temperature of the air passing over the coils of the evaporator will be several degrees warmer allowing for a temperature rise caused by the loss in the fins and tubing of the evaporator.

The importance of a seasonal check up of the air conditioning system should be brought to the attention of the customer whenever possible. A thorough check of the system performed in a methodical manner will reveal trouble the customer is often not aware of. Locating and repairing the trouble early will usually result in savings to the customer both in time and additional troubles that too often result from neglect.

A Performance Test of the system is the only positive way in which the complete system can be checked for efficient operation. The air conditioning system should be given this test before work is begun on the system whenever possible, however, if the system is completely inoperative, repairs must be performed before the system can be properly tested. The test can uncover further work that must be performed before the system is brought to its full operating efficiency.The Performance Test should always be performed after repair work has been done and before the aircraft is released to the customer. The serviceman performing this test carefully will insure that the repairs have been properly performed and that the system will operate satisfactorily.

COOLING (cont.)

D. Servicing of Air Conditioner (cont.)

A properly completed performance test includes a thorough examination of the outside and insideof the system. Many related parts are overlooked because it is felt they have no bearing on the operating efficiency of the unit. For this reason, a thorough visual inspection of the complete system should be performed, followed by an operating inspection of the system.

Chart 2
Temperature Pressure

Evaporator Pressure Gauge Reading p.s.i.	Evaporator Temperature °F.	High Pressure Gauge Reading p.s.i.	Ambient Temperature °F.
0.0	-21	72	40
2.4	-15	86	50
4.5	-10	105	60
10.1	2	109	62
11.2	4	113	64
12.3	6	117	66
13.4	8	122	68
14.6	10	126	70
15.8	12	129	71
17.1	14	132	72
18.3	16	134	73
19.7	18	137	74
21.0	20	140	75
22.4	22	144	76
23.1	23	148	77
23.8	24	152	78
24.6	25	156	79
25.3	26	160	80
26.1	27	162	81
26.8	28	165	82
27.6	29	167	83
28.4	30	170	84
29.2	31	172	85
30.0	32	175	86
30.9	33	177	87
31.7	34	180	88
32.5	35	182	89
33.4	36	185	90
34.3	37	187	91
35.1	38	189	92
36.0	39	191	93
36.9	40	193	94
37.9	41	195	95
38.8	42	200	96
39.7	43	205	97
41.7	45	210	98
43.6	47	215	99
45.6	49	220	100
48.7	52	228	102
49.8	53	236	104
55.4	57	260	110
60.0	62	275	115
64.9	66	290	120

COOLING (cont.)

E. Special Servicing Procedures

The air conditioning system should be serviced by a qualified shop with trained personnel. The following procedures and precautions should be observed.

The efficiency of this system depends upon the pressure-temperature relationship of pure refrigerant. As long as the system contains only pure refrigerant plus a specified amount of compressor oil (which is mixed with the refrigerant), it is considered to be chemically stable. Foreign materials within the system will affect the chemical stability, contaminate the system, and decrease its efficiency.

F General Refrigeration System Procedures

(1) Refrigerant Safety Precautions

(a) Refrigerant 12 (commonly known as R-12 (or Freon 12) is odorless and colorless in either the liquid or gaseous state. R-12 for charging refrigeration systems is supplied in pressurized containers (approx. 70 psi at 70˚F in liquid form). Since this material is essentially inert at room temperatures the dangers are primarily associated with the pressure and the refrigeration effects of the release and subsequent evaporation of this pressurized liquid.

(b) Wear suitable eye protection when handling R-12 due to the possibility of freezing of the eye if contacted by escaping liquid refrigerant. If liquid R-12 does strike the eye, the following actions should be taken:

1 DO NOT RUB THE EYE.
2 Splash large quantities of cool water into the eye to raise the temperature.
3 Tape on an eye patch to avoid the possibility of dirt entering the eye.
4 Rush to a physician or hospital for immediate professional aid.
5 DO NOT ATTEMPT TO TREAT IT YOURSELF.

(c) If liquid R-12 strikes the skin frostbite can occur. Treat with cool water and protect with petroleum jelly.

(d) Do not discharge large quantities of R-12 into closed rooms. It may displace most of the air in the room and this could cause oxygen starvation. Gaseous R-12 is heavier than air and flows to the bottom of a container.

(e) Do not discharge R-12 into an open flame or onto a very hot surface (500F). Poisonous phosgene gas is generated by the action of the heat on the refrigerant.

(f) Do not apply direct flame or other high heat source to a R-12 container due to the high pressures which will result. If any heating is done to R-12 containers the container pressure should be monitored and kept below 150 psi.

(2) System Servicing Precautions

— CAUTION —

Environmental regulations may require use of a collection system when necessary to evacuate freon from system

(a) Systems should be discharged slowly to prevent the escape of liquid refrigerant and the loss of the lubrication oil.

(b) Systems should not be left open to the atmosphere when discharged. Moisture and other contamination may enter and damage open systems.

(c) Never introduce anything but pure refrigerant and refrigerant oil into a system.

COOLING (cont.)

F General Refrigeration System Procedures (cont.)

(2) System Servicing Precautions (cont.)

(d) Keep refrigerant oil containers tightly sealed and clean to prevent absorption of moisture or other contamination.

(e) Use only approved refrigeration oil in the compressor. If any doubt exists about the cleanliness of the compressor oil, replace it with new oil.

(f) Never reuse oil removed from the system. Discard it.

(g) When Loctite Refrigerant Sealant has been used on a joint it must be heated to 400F prior to disassembly. Loctite must be used to seal any pipe threads in the system lines.

— CAUTION —

A very strong acid (HCL) is formed when R-12 comes in contact with moisture.

(h) Replace the receiver-dehydrator assembly on any system which has been operating with a leak allowing air to enter the system. If a receiver-dehydrator is left open to the atmosphere it should be replaced due to the loss of effectiveness of the drying compound it contains. A new receiver-dehydrator should be opened and connected to the system only when ready to charge the system with refrigerant.

(i) Recommended torque values must be used on all flare fitting and O-ring joints. Refer to Chart 3.

CHART 3.
ALUMINUM TUBING TORQUE

Metal Tube O.D.	Thread and Fitting Size	Alum. Tubing Torque
1/4	7/16	5-7 ft.-lbs.
3/80	5/8	11-13 ft.-lbs.
1/2	3/4	15-20 ft.-lbs.
5/8	7/8	21-27 ft.-lbs.
3/4	1-1/16	28-33 ft.-lbs.

G. Service Valves

The purpose of the service valve is to service the air conditioning system. (Testing, Bleeding, Evacuating and Charging). This aircraft is equipped with service valves mounted in the suction and discharge lines of the evaporator assembly. These valves are the two position type Schrader valves. All normal air conditioning service should be performed at the evaporator assembly mounted valves.

— NOTE —

Service valves are also located on the compressor. However, use of these valves in servicing is not recommended.

— NOTE —

If a Schrader service valve is not serviceable, the core assembly must be replaced.

COOLING (cont.)

H. Service Valve Replacement

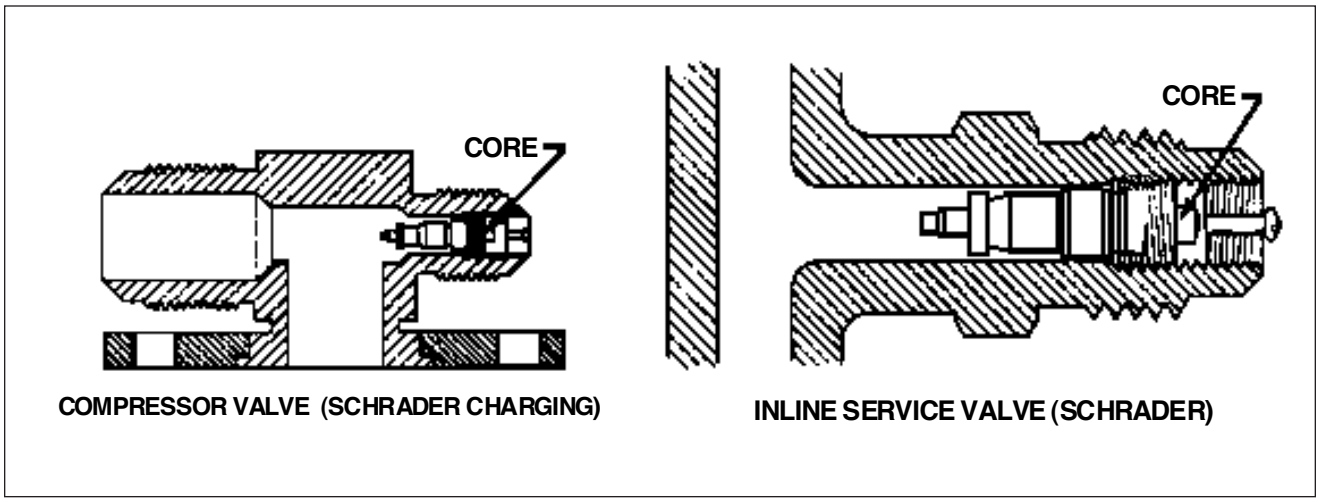

Service Valves
Figure 3

The valves on the compressor are sealed with a gasket placed in the valve port boss. Lubricate the gasket with oil of the type used in the compressor. Place the valves with the tube fitting facing aft and secure with 0.312 bolts. Torque to 15 to 23 inch pounds.

— NOTE —

Whenever the air conditioning refrigerant lines or system is opened for any reason,cap and seal line immediately to prevent dirt and other contaminants from entering the system. Do not place plugs into the hoses or fittings.

COOLING (cont.)

I. Test Gauge Manifold Set

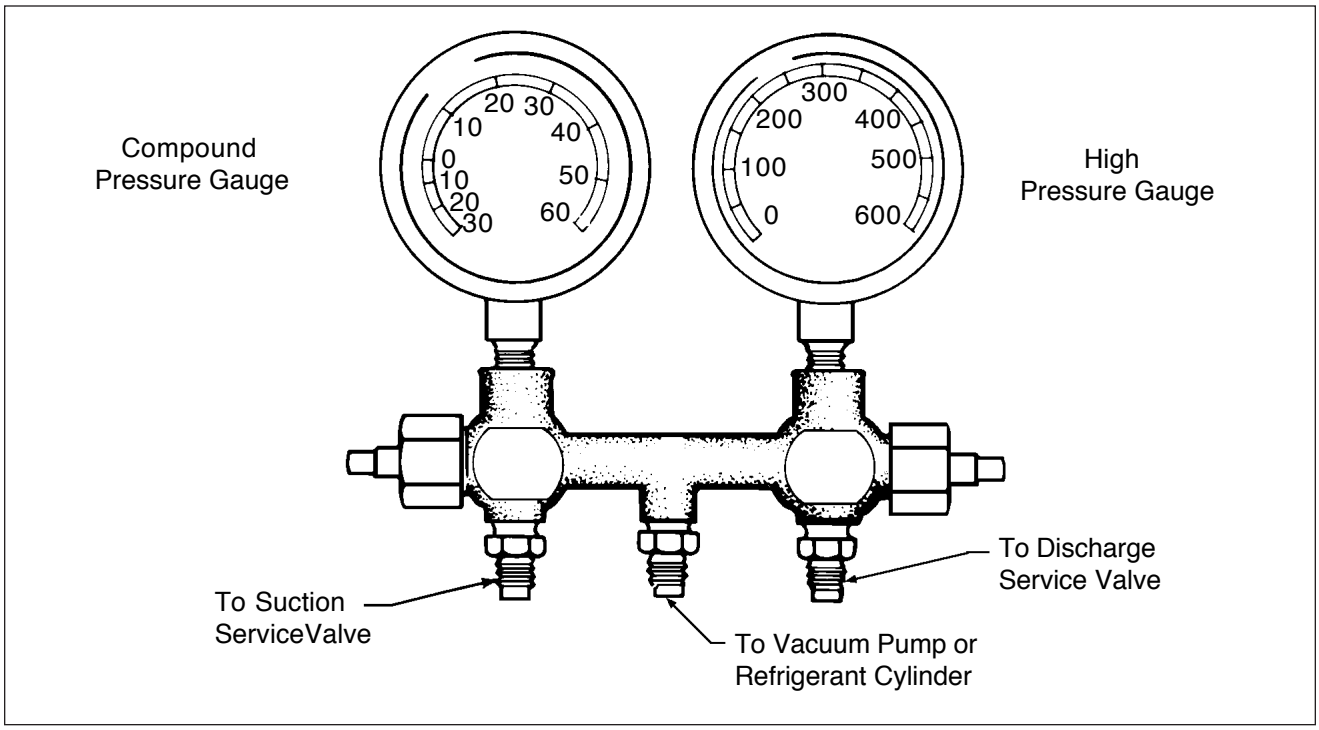

Test Gauge Manifold Set
Figure 4

The proper testing and diagnosis of the air conditioning system requires that a manifold gauge set be attached into the system. This set consists of two gauges mounted to a manifold. One gauge is a high pressure gauge used in the discharge side of the system. The other is a low pressure gauge used in the suction side of the system. The manifold is a device having fittings for both gauges and connection hoses with provisions for controlling the flow of refrigerant through the manifold. (Refer to Figures 4 and 5).

The center port of the manifold set is used for charging or evacuation procedures, or any other service that may be necessary.

Both the high and low pressure sides of the manifold have hand shut-off valves. When the hand valve is turned clockwise all the way in the manifold is closed. The pressures on that side of the system will be recorded on the gauge above the hose.

Cracking the hand valve in a clockwise direction opens the system to the middle service port of the manifold set. This is desirable only when necessary to let refrigerant out of or into the system. (Refer to Figures 4 and 5).

COOLING (cont.)

I. Test Gauge Manifold Set (cont.)

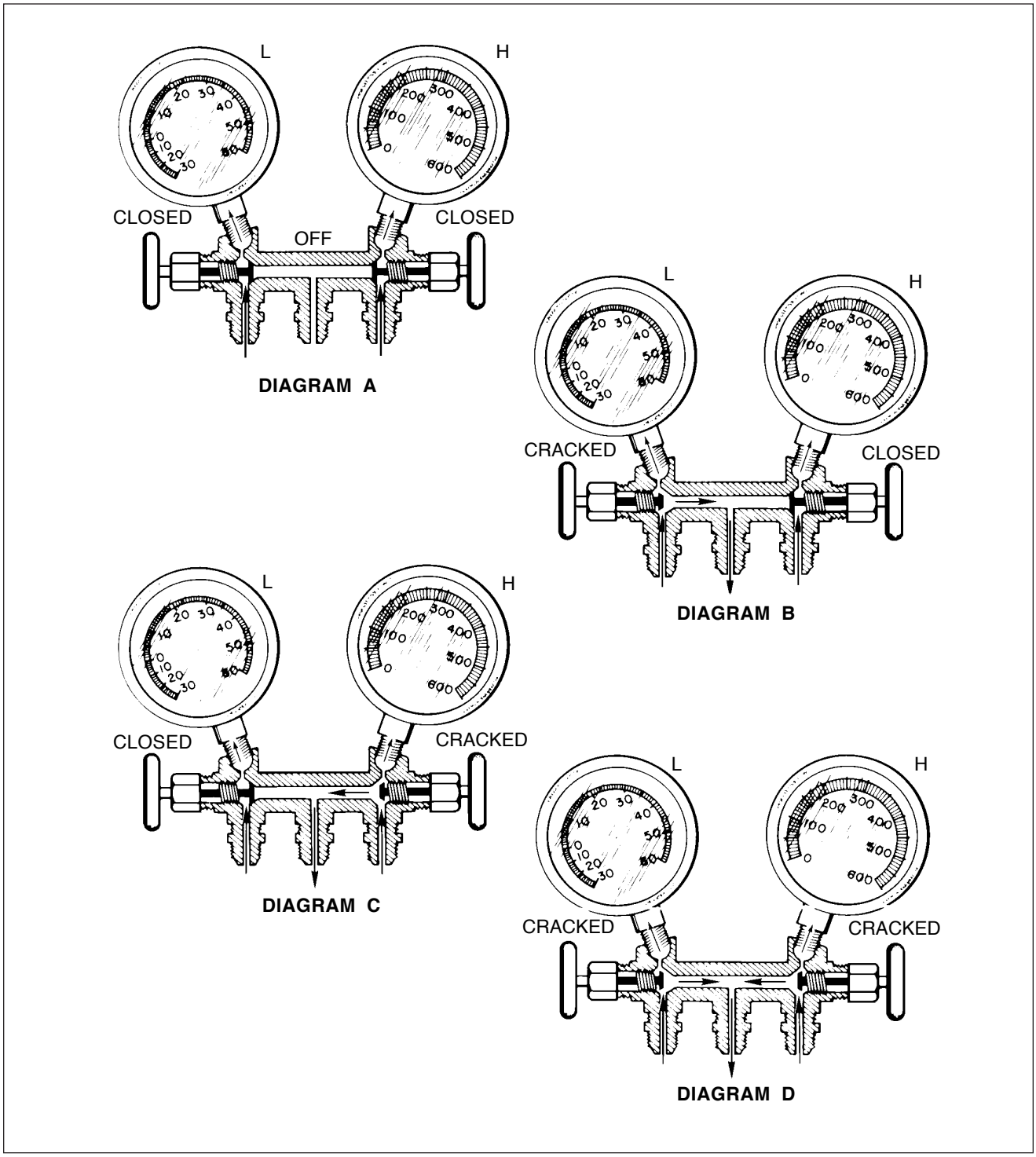

Manifold Set Operation
Figure 5

COOLING (cont.)

J, Checking System For Leaks

There are two methods of checking for system leaks depending on the type of equipment available.

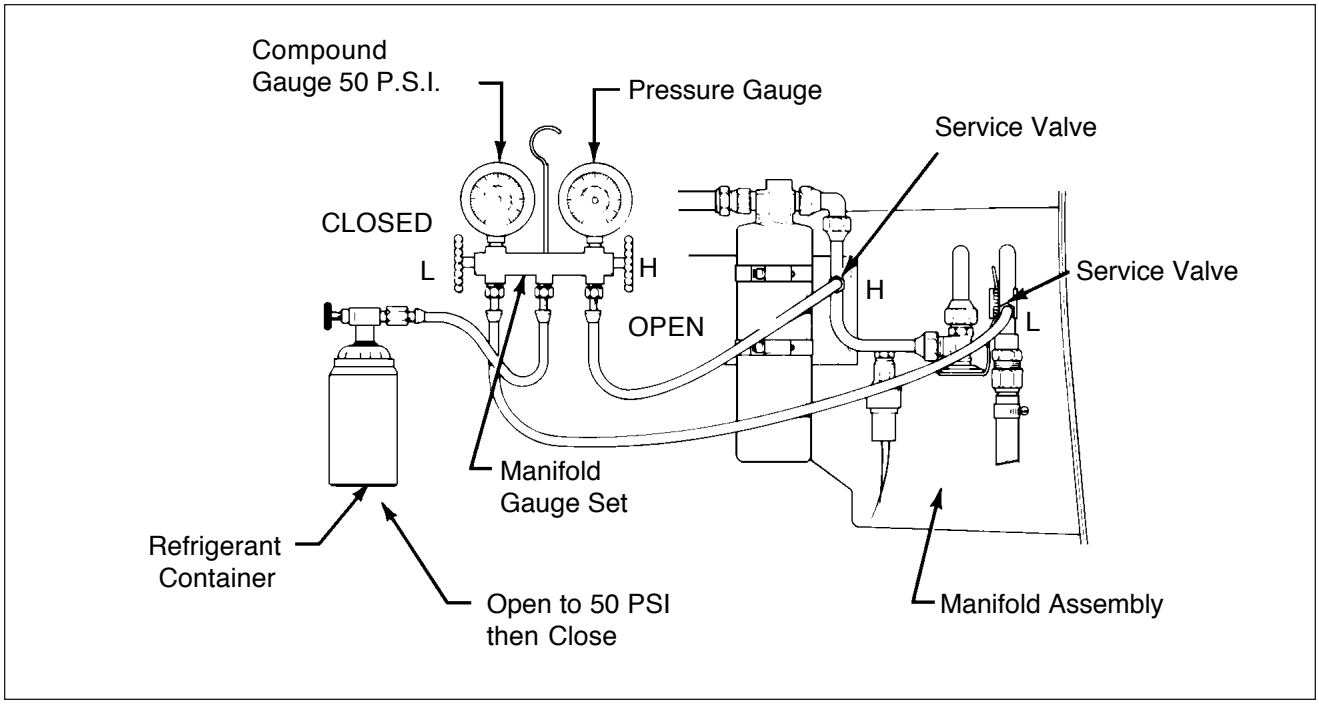

Leak Test Hookup
Figure 6.

— CAUTION —

Environmental regulations may require use of a collection system when necessary to evacuate freon from system

— NOTE —

Evacuate system prior to leak check.

(1) Method One

(a) Connect manifold gauge set into system and determine if there is any refrigerant in the system. A minimum of 50 psi refrigerant system pressure is needed for leak detection. (Refer to Figure 21-7.)

(b) Purge the hoses of air by allowing some refrigerant to escape from connections at the service valves. Then tighten connections at the service valve.

(c) Close low side manifold valve and open high side manifold valve.

(d) Open the refrigerant container service valve and allow the pressure at the low side gauge to reach 50 psi at which time close the high side manifold valve.

(e) Close the refrigerant container service valve and remove the hose if no leaks are evident.

COOLING (cont.)

J, Checking System For Leaks (cont.)

(1) Method One (cont.)

(f) It is advisable to use an electronic leak detector to check this system instead of an open flame leak detector due to the possible presence of gasoline fumes in the engine area.

(g) If any leaks are found, purge the system of refrigerant, make the necessary repairs and check the compressor oil.

(h) Add oil, if required, (refer to Checking Compressor Oil and Chart 2106) then repeat Steps 1 thru 5.

(i) If no further leaks are found, the system may be evacuated and charged. (Refer to Evacuating the System and Charging the System.)

(2) Method Two

(a) Remove the access panel at the rear of the cabin to gain access to the service valves.

(b) Remove the protective cap on the high pressure Schrader valve fitting and connect a charging hose with a shut-off valve arrangement to the fitting. The charging hose must have a Schrader fitting or adapter to fit the valve.

(c) Connect the other end of the charging hose to a small cylinder of refrigerant and purge the hose by allowing a slight amount of refrigerant gas to escape from the Schrader valve fitting.

(d) The cylinder of refrigerant should be placed upright in a container of warm (125F max.) water on a small scale.

(e) Allow approximately 1/2 pound of refrigerant to enter the system by opening the valve on the charging hose and observing the weight change on the scale.

(f) Using an electronic leak detector, check all joints and repair any leaks.

(g) After completion of repair of any leaks, proceed to check the system in accordance with one of the methods outlined for any other leaks.

(h) If no further repair is required on the system, it is now ready to evacuate in accordance with Evacuating the System.

K. Discharging System

— CAUTION —

Environmental regulations may require use of a collection system when necessary to evacuate freon from system

— CAUTION —

Refrigerant can cause freezing of skin. Be particularly careful not to allow contact with the eyes.

— CAUTION —

Do not allow refrigerant to escape too rapidly, as excessive oil may be carried out of system. When hissing stops, system is empty and valve should be closed if no further work is planned.

COOLING (cont.)

K. Discharging System (cont.)

— NOTE—

Applies to Kent Moore J23500 or similar charging station. (Refer to Figure 8.)

(a) Close all valves on charging station.
(b) Connect red high pressure charging line to high pressure Schrader valve at the evaporator fitting.
(c) Open high pressure control valve on charging station one turn.
(d) Hold end of blue low pressure charging line in a shop rag and slowly open low pressure control valve on charging station allowing refrigerant to exhaust from system into shop rag.

L. Evacuating System

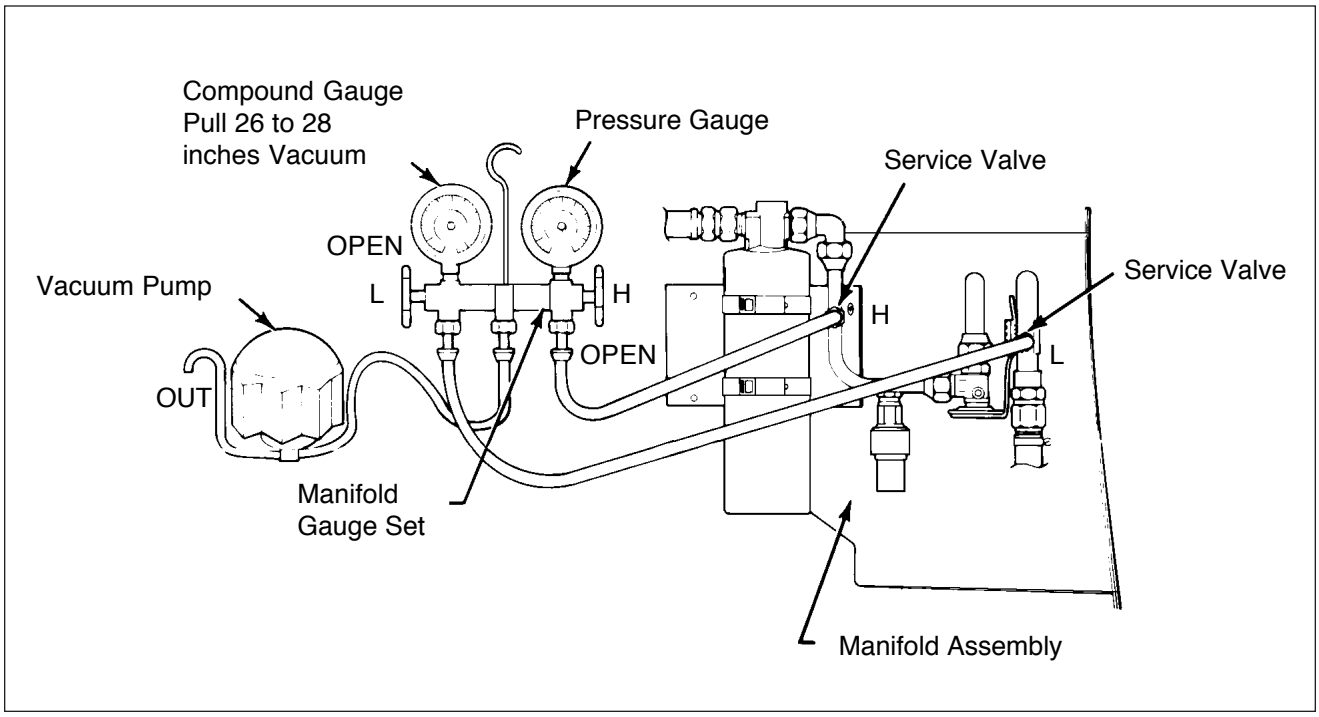

Evacuation Hookup
Figure 7

Anytime the system has been operated in a discharged condition, or the system has been open to atmospheric pressure, the receiver-dehydrator must be replaced and the system evacuated to remove any trapped air and moisture. Use a vacuum pump capable of pulling 29 inches of mercury or better. As the pressure in the air conditioning system is lowered the boiling temperature of any water (moisture) in the system is lowered. The water can then be pulled out of the system in the form of vapor,. Chart 4 demonstrates the effectiveness of moisture removal under a given vacuum.

COOLING (cont.)

L. Evacuating System (cont.)

Chart 4. System Vacuum Chart

	System Vacuum	Temperature ˚F
	27.99	100
COMPOUND GAUGE	28.89	80
READING IN INCHES	29.40	60
OF MERCURY VACUUM	29.71	40
	29.82	20
	29.88	0

— NOTE —

The compound gauge will read approximately one inch less pressure for each 1,000 feet above sea level, .

(1) Remove access panel at the rear of cabin to gain access to the Schrader service valves.

— CAUTION —

Ensure that all system pressure is released before attempting the evacuation. (Refer to Special Serving Procedures)

(2) Connect manifold gauge set to airplane service valves. (Refer to Service Valves.)
(3) Ensure high and low manifold hand valves are in closed position. (Refer to Figures 21-5 and 21-6.)
(4) Connect center manifold hose to vacuum pump inlet.

— NOTE —

Make sure exhaust port on vacuum pump is open to avoid pump damage.

(5) Start vacuum pump and open manifold low side hand valve. Observe compound low pressure gauge shows a slight vacuum.
(6) Continue operating vacuum pump for 25 minutes ***after*** low pressure gauge indicates 26 to 28 inches of vacuum.
(7) If system cannot maintain 26 to 28 inches of vacuum close both manifold hand valves and observe compound gauge.
(8) If the compound gauge show loss of vacuum, there is a leak in the system, which must be repaired before continuing with evacuation.
(9) If no leaks are evident, reopen both manifold hand valves and continue the evacuation for another 30 minutes.
(10) Close manifold hand valves, stop vacuum pump and disconnect center manifold hose from the vacuum pump.
(11) Immediately charge system. (Refer to Charging System).

COOLING (cont.)

M. Charging The System

Use one of the following procedures to charge the system:

(1) Charging stand method.

1. CYLINDER PRESSURE GAUGE
2. COMPOUND GAUGE
3. VALVE, LOW PRESSURE CONTROL
4. VALVE, VACUUM CONTROL
5. CHARGING CYLINDER
6. BRACKET
7. SIGHT GLASS
8. CYLINDER BASE VALVE
9. HIGH PRESSURE GUAGE
10. VALVE, HIGH PRESSURE CONTROL
11. VALVE, REFRIG. CONTROL
12. CHARGING LINE HOSE HOLDER
13. BRACKET
14. LOW PRESURE CHARGING LINE
15. HIGH PRESSURE CHARGING LINE
16. HEATING ELEMENT PLUG
17. VACUUM PUMP
18. OIL FILL LOCATION
19. NECK ASSEMBLY
20. REFRIGERANT DRUM SUPPORT
21. REFRIGERANT DRUM VALVE
22. VACUUM PUMP VALVE
23. VACUUM PUMP EXHAUST PORT
24. TOP CYLINDER VALVE
25. REFRIGERANT DRUM
26. WEB STRAP
27. REFRIGERANT DRUM REDUCER
28. CHARGING CYLINDER HOSE
29. VACUUM PUMP INTAKE HOSE
30. VACUUM PUMP SWITCH
31. VACUUM PUMP POWER CORD

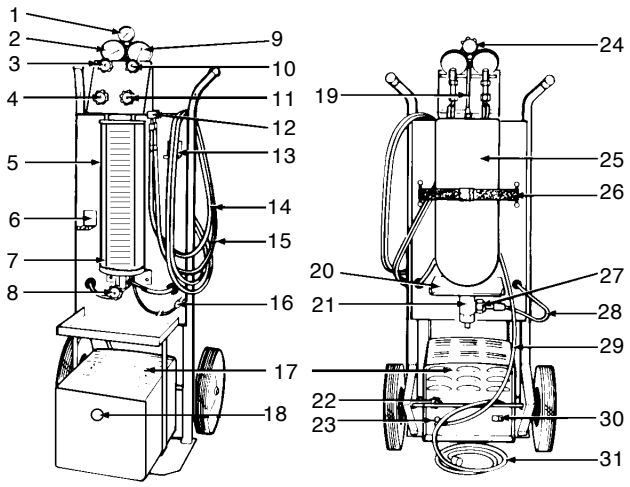

Charging Stand
Figure 8

— NOTE —

Applies to Kent Moore J23500 or similar charging stand. (Refer to Figure 8.)

(a) Connect charging stand to system. (Refer to Figure 9.)
(b) Fill charging cylinder by opening valve at the base of charging cylinder. Fill sight glass with two pounds of liquid refrigerant.
(c) If refrigerant stops filling sight glass, intermittently open valve at top of the gauge neck assembly to relieve head pressure. Allow refrigerant to continue filling sight glass to the required amount.
(d) When refrigerant reaches required level in sight glass, close valve at the base of the cylinder and valve at bottom of refrigerant tank. Be sure top valve is fully closed.

COOLING (cont.)

M. Charging The System (cont.)

(1) Charging stand method (cont.)

— NOTE —

If bubbling occurs in sight glass, reopen cylinder base valve momentarily to equalize drum and cylinder pressure.

(e) Connect the heating element plug to a 110 volt outlet.
(6) Turn cylinder sight glass to match pressure reading on cylinder pressure gauge, this scale should be used during entire charging operation.
(7) Close valve 1 (low pressure control), fully open valve 4 (refrigerant control) and allow all the liquid refrigerant contained in the charging cylinder to enter high side of aircraft system.
(8) When the full charge of refrigerant has entered the system, close valve 4 (refrigerant control) and valve 2 (high pressure control).
(9) After completion of charging, close all valves on the charging stand. Disconnect the high and low pressure charging lines from the aircraft system. (A small amount of refrigerant remaining in the lines will escape.) Replace lines on holder of charging stand to keep air and dirt out of lines. Open the valve at the top of cylinder to relieve any remaining pressure, then close the valve.
(10) Reinstall protective caps of Schrader valves and any access panels previously removed.

(2) Using the airplane compressor to charge system
This method is least desirable due to requirement of operating airplane's engine to run compressor.

— CAUTION —

Ensure area around airplane is clean and a qualified person is at the controls of the airplane.

(a) With system evacuated, connect refrigerant charging hose to manifold and purge the charging hose of air. (Refer to Figure 9)
(b) Place refrigerant container on a scale to observe amount of refrigerant entering system. Open high pressure valve and add as much refrigerant as possible.
(c) Close high pressure valve. Start engine and operate it at 900 to 1000 rpm.
(d) Operate air conditioner and set controls to maximum cooling.
(e) Open low pressure valve and complete charging system.
(f) Close low pressure valve after two pounds of refrigerant has been added to the system.
(g) While system is operating, observe the sight glass in top of receiver-dehydrator by removing plastic plug.
(h) Sight glass should be clear of any bubbles or foam. If bubbles or foam are seen passing through sight glass, it is an indication of a low refrigerant charge in the system and more refrigerant is required. Make check with OAT of 70˚F or higher and with air conditioner operating.

COOLING (cont.)

M. Charging The System (cont.)

(2) Using the airplane compressor to charge system (cont.)

(i) If more refrigerant must be added to system, open low pressure valve, increase engine speed to 2000 rpm and observe sight glass. After sight glass has cleared, close low pressure valve and observe pressure gauges. At 1000 rpm, gauge pressure should be 15 to 20 psi on the low side, and 150 to 200 psi on the high side.

— NOTE —

Suspect leaks or an inaccurate scale if two pounds of refrigerant does not fill the system.

(j) Shut off air conditioning system and airplane engine. Remove charging lines from Schrader valves with care due to the refrigerant remaining in hose.

— NOTE —

A shop cloth should be used to divert escaping refrigerant when disconnecting the charging hose from the Schrader valve. Recap the valve.

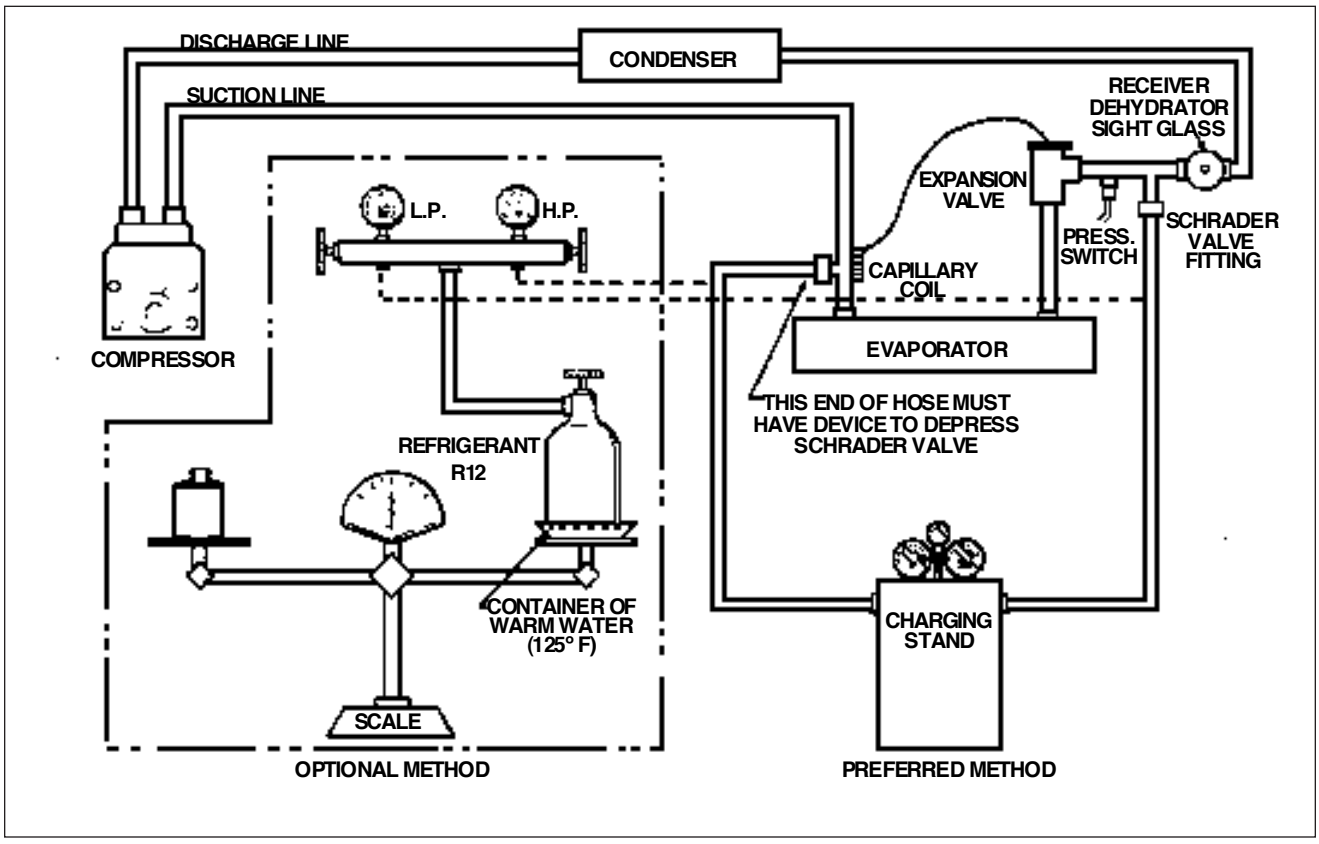

Charging Hookup
Figure 9

COOLING (cont.)

N. Addition Of Partial Charge To System

Top off system with refrigerant by the following method:

(1) Remove access panel at rear of the cabin.
(2) Connect a charging hose to a refrigerant cylinder and also to Schrader valve fitting on suction line. (Refer to Figure 9.)
(3) Purge charging hose by allowing a small amount of refrigerant gas to escape at Schrader valve fitting.
(4) Start airplane engine and operate at 1000 rpm Turn the conditioner on maximum cool.
(5) Remove plastic plug from sight glass on top of receiver-dehydrator.
(6) With a low refrigerant charge in the system, bubbles will be seen through sight glass when system is operating.
(7) Open valve on refrigerant cylinder.
(8) Allow refrigerant to flow into system until bubbles disappear from sight glass.
(9) Close refrigerant valve and check that sight glass remains clear during system operation.
(10) When sight glass stays clear of bubbles, add an additional 1/4 pound of refrigerant to system. (Engine should be operating at 1000 RPM.)

— NOTE —

Perform procedures above with 70˚ F OAT or higher, and with air conditioner operating.

(11) Shut off air conditioner and engine. Remove charging hose from Schrader valve with care. Some residual refrigerant will remain in line.
(12) Install access panels.

O. Component Service

— CAUTION —

Cleanliness and care must be exercised to prevent dirt or foreign material from entering the system. All hose and tubing ends must be capped immediately. Lubrication required during assembly of components must be refrigerant oil of same type used in compressor.

(1) Compressor Service
Do not service compressor in the field. Service must be accomplished only by a qualified shop having the special equipment and trained personnel to properly service unit.

Field service to compressor, and its related components, is limited to replacement of worn drive belt and magnetic clutch. Any other service requires removal of compressor from the system.

COOLING (cont.)

O. Component Service (cont.)

(2) Compressor Removal

— CAUTION —

Environmental regulations may require use of a collection system when necessary to evacuate freon from system

(a) Completely system discharge. (Refer to Discharging System.)
(b) Turn off air conditioning system circuit protector.
(c) Remove engine cowling and right front baffles.
(d) Disconnect compressor's magnetic clutch electrical leads.
(e) Depressurize air conditioning system.

— NOTE —

Cap all open lines immediately to prevent dirt and moisture from entering system.

(f) Remove suction and discharge lines from compressor service valves.
(g) Loosen bolt securing compressor idler pulley to release belt tension. Remove belt from compressor pulley. (Do not force belt over the pulleys.)
(h) Support compressor and remove the 6 bolts securing compressor to engine mounting brackets.

(3) Compressor Installation

(a) Place compressor to mounting brackets. Install the six bolts and progressively torque to 14-17 foot pounds. Safety all bolts with .032 safety wire.
(b) Check oil level in compressor in accordance with instructions given in Checking Compressor Oil.

— CAUTION —

Do not force the belt into the pulley sheave. If necessary, remove the idler assembly.

(c) Place drive belt over clutch pulley and adjust the alignment of pulleys and belt in accordance with instructions given in Replacement of Compressor and/or Alternator Drive Belts.
(d) Connect the discharge and suction lines to their respective service valve fittings.

— WARNING —

Before operating air conditioner on the ground ensure test area is clean and free of any loose objects. Use only service valve located on evaporator assembly for testing.

(e) Evacuate and charge the system per Evacuating the System and Charging the System.

COOLING (cont.)

O. Component Service (cont.)

(4) Checking Compressor Oil
Compressor oil level should be checked any time the system is discharged. Compressor must be in installed position.

(a) Discharge system. (Refer to Discharging System).
(b) Fabricate an oil dipstick. (Refer to Figure 10.)

— CAUTION —

The oil plug should not be removed with pressure in the system.

(c) Remove 0.375 inch oil plug in top side of compressor crankcase.
(d) Place Woodruff key in the up position before inserting dipstick into crankshaft . (Front face of compressor clutch is marked with a stamped “K” indicating key location.)
(e) Use long end of dipstick to measure oil level from lowest point in crankcase.(See Figure 10.)
(f) Use Chart 5 to determine the amount of oil in the crankcase.

— CAUTION—

A 10 ounce oil level is required in compressors installed on new systems. Some oil is distributed in the system during operation. Replacement compressors should be charged with 10 ounces of oil.

(f) Do not operate compressor with less than 6 ounces of oil. When adding oil level must not go above 10 ounces. Piper refrigerant oil PMS-L2000 or equivalent 500 viscosity refrigerant oil must be used.
(g) Evacuate and charge system. (Refer to Evacuating the System and Charging the System.)

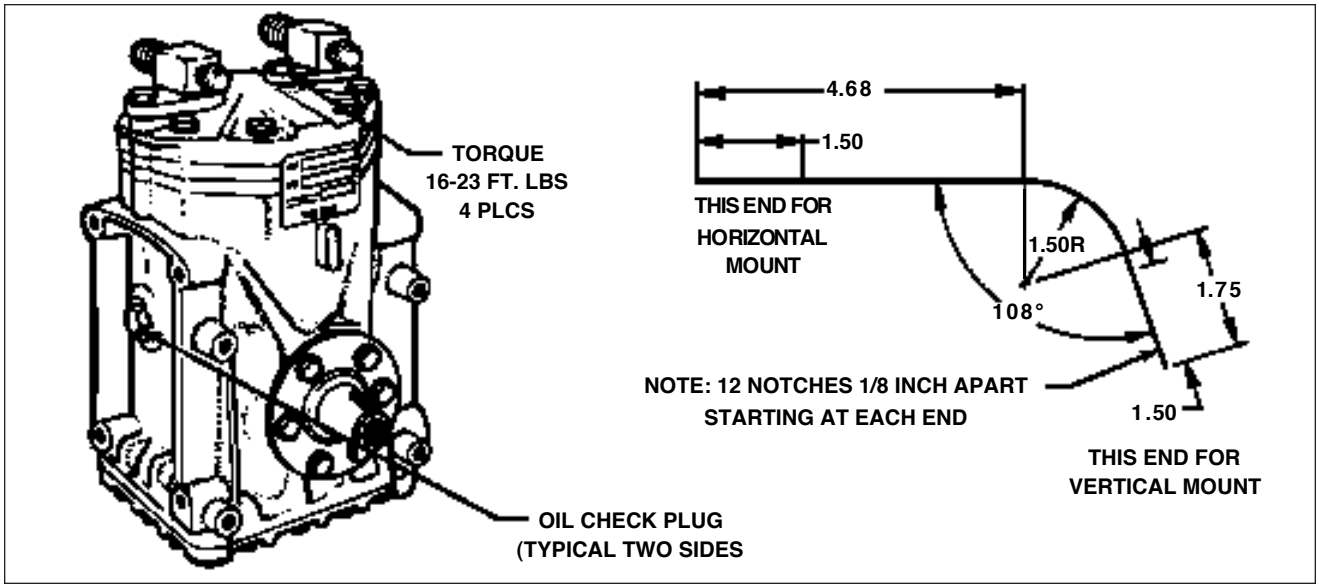

Compressor and Fabricated Oil Stick
Figure 10

COOLING (cont.)

O. Component Service (cont.)

(4) Checking Compressor Oil (cont.)

CHART 5
COMPRESSOR OIL CHARGE

Oil Charge Ounces	6	8	10	16
Dipstick Reading Inches	13/16	1.00”	1-3/16	1-15/16

(5) Replacing Compressor Drive Belt (Refer to Figure 11.)
(a) Remove spinner, propeller, nose cowl, required engine baffles, starter ring gear assembly.
(b) Remove compressor drive belt.
(c) Place new belt in its appropriate positions on starter ring gear sheaves.
(d) Install starter ring gear assembly, propeller, and spinner.

— CAUTION —

Do not force belt into the pulley sheave. If necessary, remove idler assemblies and alternator lower mounting bolts to install belt.

(e) Route the belt to the proper pulley sheaves as shown in Figure 11, View D.
(f) Check compressor belt and pulley alignment:
1 Measure distance (nominal distance) from forward face of ring gear to ring gear sheave by measuring width of starter ring gear *plus* dimension from *rear* surface of ring gear to *forward* edge of compressor drive belt. (Refer to Figure 11, View A)
2 Place a straight edge against right forward side of ring gear. Measure distance between straight edge to forward edge of belt at compressor pulley. (Refer to Figure 11, View B, Point B).

— NOTE —

Insure adequate ring gear surface contact to provide a solid base for the straightedge.

3 Measure distance between straight edge to forward edge of belt at compressor idler pulley. (Refer to Figure 11, View B, Point A).
4 Difference in distance measured at point A must not be more than half the difference between distance measured at point B and the nominal distance measured at the top of the ring gear and in the same direction, fore or aft.
5 If difference determined in step (f), 4 is not within 0.030 of an inch, add or remove shims at compressor mounting brackets, as required. Make distance measured at point B as close to nominal distance as shims will allow (Refer to Figure 11, Views C).
(g) Check alternator belt alignment
Align alternator idler pulley in belt plane by adding and removing shims (P/N 62833-82) as required. (Refer to Figure 11, Views D).

COOLING (cont.)

O. Component Service (cont.)

(5) Replacing Compressor Drive Belt (cont.)

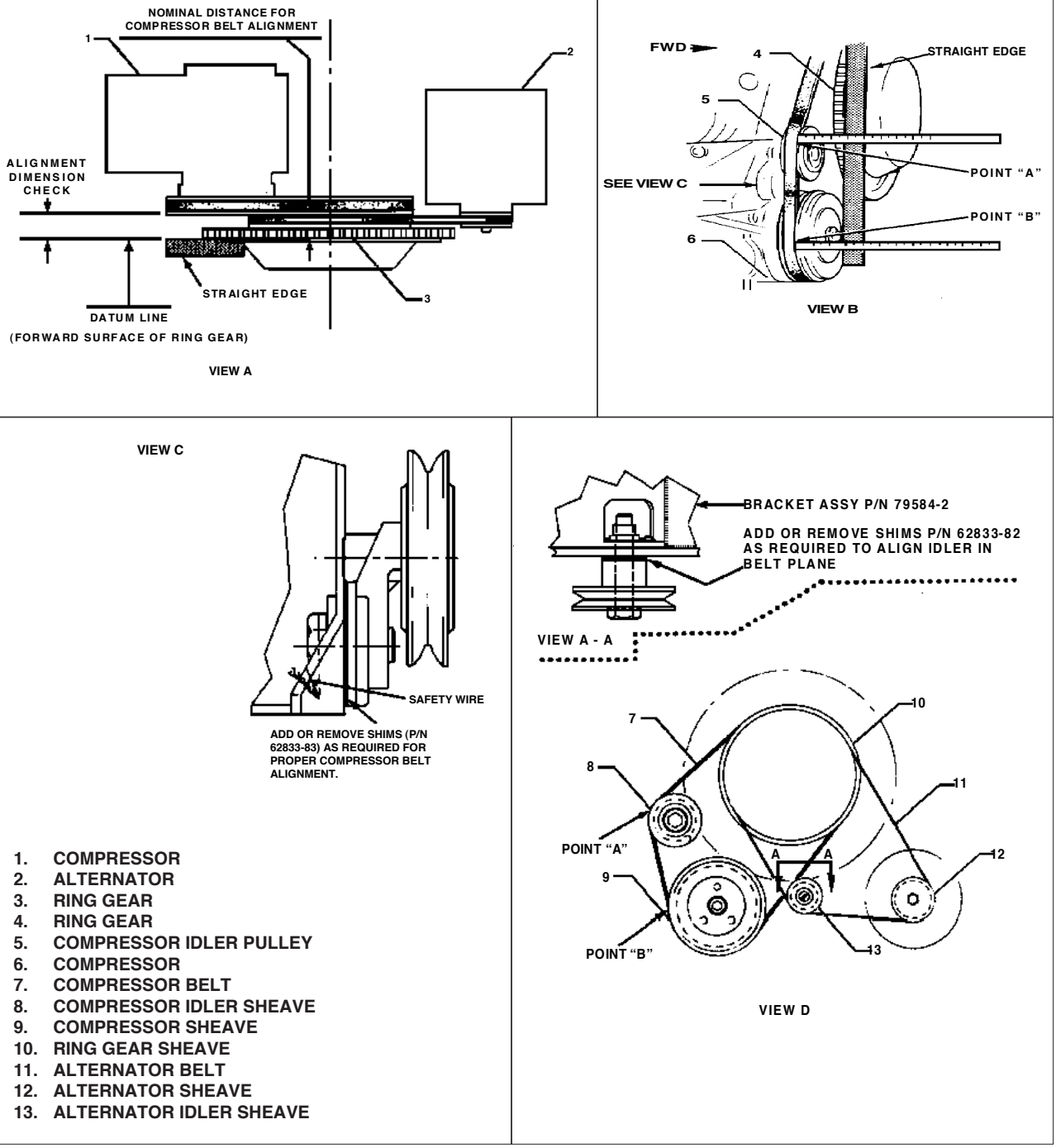

1. COMPRESSOR
2. ALTERNATOR
3. RING GEAR
4. RING GEAR
5. COMPRESSOR IDLER PULLEY
6. COMPRESSOR
7. COMPRESSOR BELT
8. COMPRESSOR IDLER SHEAVE
9. COMPRESSOR SHEAVE
10. RING GEAR SHEAVE
11. ALTERNATOR BELT
12. ALTERNATOR SHEAVE
13. ALTERNATOR IDLER SHEAVE

Compressor and Alternator Belt Installation
Figure 11

COOLING (cont.)

O. Component Service (cont.)

(5) Replacing Compressor Drive Belt (cont.)

(h) Check compressor and alternator drive belt tension.

1 Adjust ***new*** compressor belt to 120 pounds span tension.

2 Adjust ***new*** alternator belt to:

a Rubber - 90 to 100 pounds span tension

b Plastic - 65 to 70 pounds span tension

3 Run engine for 0:15 minutes at 1200 rpm. Shut down engine.

4 Recheck belt tension:

a Adjust compressor belt to 60 to 80 pounds span tension.

b Adjust rubber type alternator belt tension to 50 to70 pounds span tension

c Adjust plastic type alternator belt tension to 35 to 40 pounds span tension

(i) Check idler pulley and bracket bolts for safety.

(j) Install any previously removed engine baffles and engine cowling.

(6) Magnetic Clutch Removal (Refer to Figure 12)

(a) Remove compressor pulley

1 Remove self-locking capscrew and washer securing pulley to compressor shaft.

— CAUTION —

Do not use a wheel puller on the outer flange of the pulley. This can damage the pulley grooves or clutch bearings.

2 Remove pulley assembly by applying force on the end of compressor crankshaft by inserting a 5/8-11 UNC-2B bolt in the threaded portion of the hub and tightening.

(b) Remove four bolts and washers securing field assembly against compressor bosses.

(c) Remove field assembly.

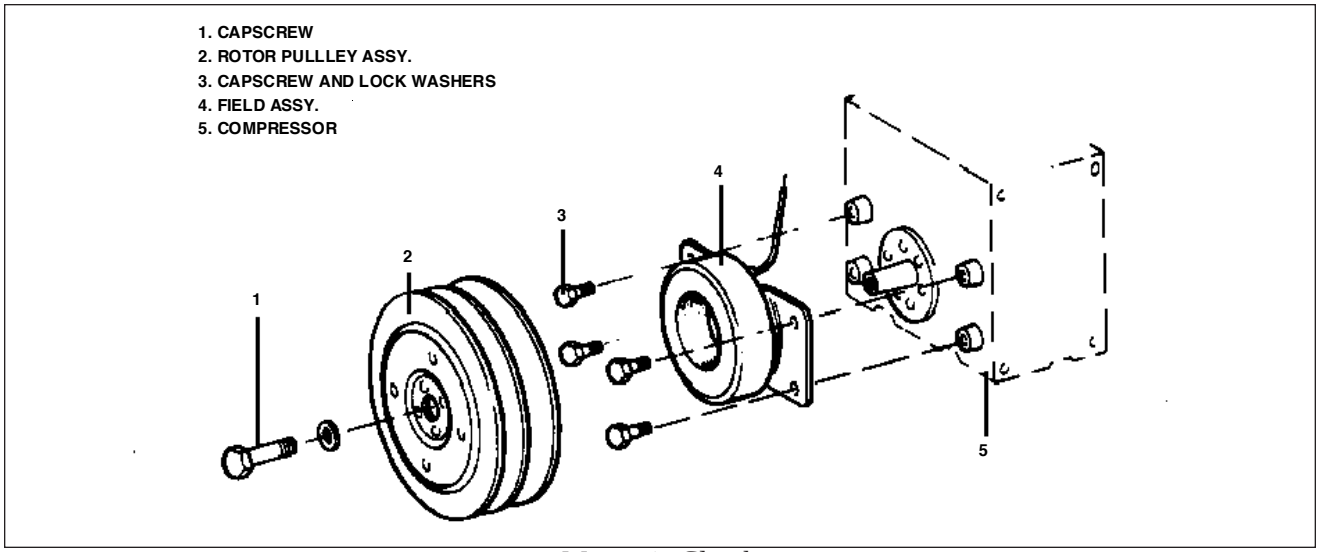

Magnetic Clutch
Figure 12

COOLING (cont.)

O. Component Service (cont.)

(7) Magnetic Clutch Installation (Refer to Figure 12)

(a) Ensuring electrical leads are to the cylinder side of compressor, position field assembly against compressor bosses.

(b) Secure field assembly with four capscrews and lockwashers. Do not torque.

(c) Connect the electrical lead from the field assembly.

— NOTE —

Ensure compressor shaft is clean and free from burrs.

(d) Slide pulley assembly over field assembly onto compressor shaft.

(e) Torque field assembly cap screws 85 to 120 inch pounds.

— NOTE—

If the clutch is not engaged while tightening the pulley assembly capscrew, insert a spanner into the holes provided in the armature face.

(f) Insert new self-locking capscrew and washer into pulley assembly. Torque capscrew 180 to 240 inch pounds.

(g) Check for interference between field and rotor pulley assemblies spinning pulley by hand to interference is indicated by a rubbing noise.

(h) If interference is detected, rotor pulley assembly must be removed and field assembly mounting adjusted until interference is eliminated.

P. Refrigerant Lines and Routing

Refrigerant lines are flexible high pressure hoses that should be handled accordingly. Refrigerant hoses in the power plant area are routed to provide maximum protection from heat and abrasion. They couple at the firewall to hoses routed through two inboard, external hat sections on the bottom of the fuselage, up through floor to the condenser and evaporator in tail cone. Discharge is in the right hand section and the suction in the left.

— NOTE —

Completely discharge system before disconnecting any hose couplings

Q. Receiver-Dehydrator

(1) Removal

The receiver-dehydrator located in the tail section behind the rear closeout panel. It is mounted on the inboard side of the evaporator assembly.

— NOTE —

Receiver-dehydrator is not serviceable and must must be replaced whenever system has been operated without a charge or is left open.

COOLING (cont.)

Q. Receiver-Dehydrator (cont.)

(1) Removal (cont.)
(a) Completely discharge system. (Refer to Discharging System.)
(b) Uncouple refrigerant lines at receiver-dehydrator. (Refer to Special Servicing Procedures.)
(c) Remove clamp attaching unit to evaporator housing.

(2) Installation
(a) Slip mounting bracket around new receiver and place on the evaporator housing with tube fitting on top.
(b) Align fittings to proper line before securing mounting bracket.
(c) Torque fittings. (Refer to Chart 3.)
(d) Evacuate and recharge system. (Refer to Evacuating System and Charging System.)

R. Condenser

The condenser is mounted in a frame assembly located in the bottom of the fuselage between stations 156.00 and 191.00.

(1) Removal (Refer to Figure 13)
(a) Discharge system. (Refer to Discharging System.)
(b) Remove access panel from cabin aft bulkhead.
(c) Remove forward cover panel.
(d) Uncouple suction and discharge hoses at condenser fitting. (Refer to Special Servicing Procedures.)
(e) Remove hose clamps holding hoses to condenser frame.
(f) Remove AN-3 bolts from upper ends of side hinges and rod ends.
(g) Support condenser assembly. Remove bolt attaching actuating rod to condenser assembly.
(h) Lower ***aft*** end of assembly on piano hinge at ***forward*** end of assembly.
(i) Remove eight screws attaching piano hinge to condenser frame assembly. Remove frame assembly from aircraft.
(j) Remove condenser core from frame assembly by removing screws in side mounting frame.

(2) Installation (Refer to Figure 13)
(a) Install condenser core to frame assembly with hose fittings facing forward and up.
(b) Place condenser and frame assembly to fuselage frame mounting bracket.
(c) Insert the (8) screws into piano hinge.
(d) Attach side hinges and actuating rod. Rig per Condenser Assembly Rigging.
(e) Apply Loctite refrigerant sealant to hose flange fittings. Couple hoses.
(f) Adjust condenser in accordance with Condenser Assembly Rigging.
(g) Seal all around forward cover panel (and aft cover panel if removed) with Permagum Bead No. 576 purchased from Prestolite Engineering Company. (Refer to Figure 13)

— WARNING —

Whenever it is necessary to remove and replace cabin rear panel, it musty be replaced and sealed in original manner. If not, due to lower pressure in cabin, exhaust gases may seep into cabin.

COOLING (cont.)

R. Condenser (cont.)
(2) Installation (cont.)
(h) Perform ground and in flight carbon monoxide (CO_2) tests with and without air conditioner operating. CO_2 intrusion shall not exceed 1 part in 20,000.

S. Condenser Door Actuator.
The condenser door actuator is on a bracket mounted between two bulkheads in the tail cone. It is coupled to the condenser assembly through a bellcrank mounted to a bracket on the bulkhead aft of the condenser. The actuator travel is controlled by two limit switches. Both the up and down switches are located on the actuator. Refer to Figure 13 for the switch locations.

NOTES

1. WITH DOOR FULLY CLOSED ADJUST "CLOSED" (UP) LIMIT SWITCH SO THAT THE ACTUATOR TRAVELS AN ADDITIONAL 0.12 INCH (PRELOAD) AFTER DOOR IS FULLY CLOSED. ADJUST "OPEN" LIMIT SWITCH TO PROVIDE DOOR OPENING OF 5.00 INCHES.
2. SEAL ALL AROUND FROWARD AND AFT COVERS WITH PERMAGUM BEAD NO. 576 PURCHASED FROM PRESTOLITE ENGINEERING COMPANY.

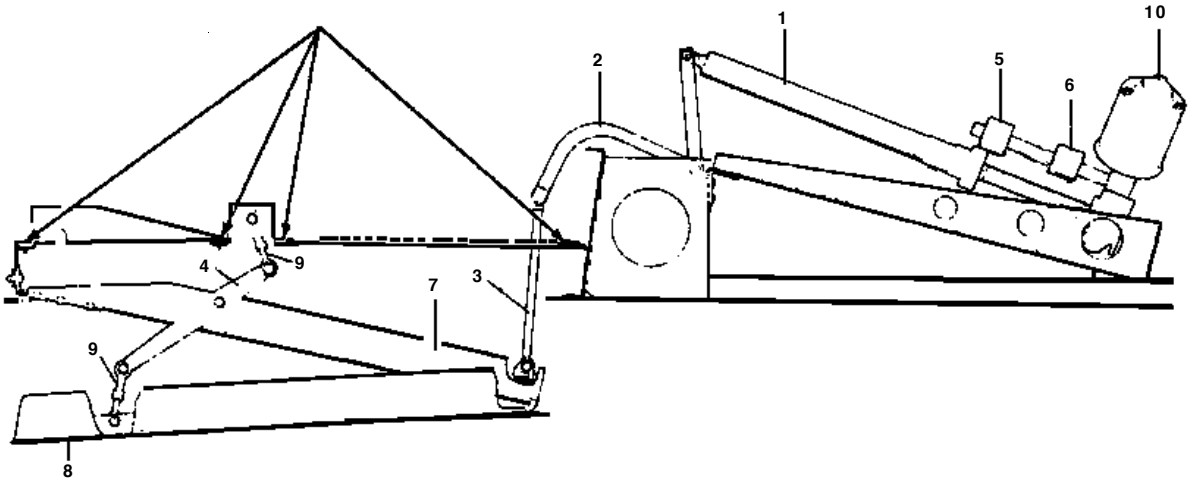

1. ACTUATING TRANSMISSION ASSY.
2. BELLCRANK ASSY. (CONDENSER)
3. PUSH ROD ASSY.
4. BELLCRANK ASSY, (MECHANISM)
5. OPEN LIMIT SWITCH
6. CLOSED LIMIT SWITCH
7. CONDENSER
8. CONDENSER DOOR
9. PUSH ROD
10. TRANSMISSION MOTOR ASSY.

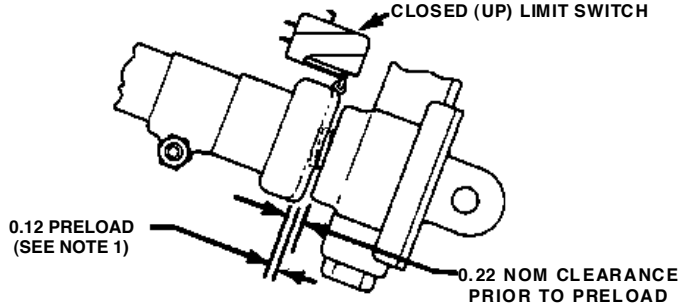

CLOSED LIMIT SWITCH ADJUSTMENT

Condenser Door Installation
Figure 13

COOLING (cont.)

T. Condenser Assembly (Refer to Figure 13.)
The condenser assembly is actuated by an electric motor through bellcranks, push rods, and limit switches.
(1) Condenser assembly rigging
Condenser door must fit flush with fuselage skin, and with increased force along forward edge.
(a) Adjust open limit switch to open condenser door 5.00 ± 0.50 inches when measured from the leading edge of the door to the fuselage skin.
(b) Adjust side push rods so that a vertically gap of 0.16 of an inch exists along the trailing edge of the door at instant forward edge of door becomes flush with fuselage skin.
(c) To preload mechanism, after door is fully closed, adjust "CLOSED" limit switch so that the actuator travels an additional 0.12 of an inch. (Refer to Figure 13.)
(d) Cycle assembly several times to ensure proper operation without binding.

U. Expansion Valve
The expansion valve is located in the evaporator assembly between the receiver dehydrator and the evaporator inlet. The capillary coil is attached to the evaporator outlet line.

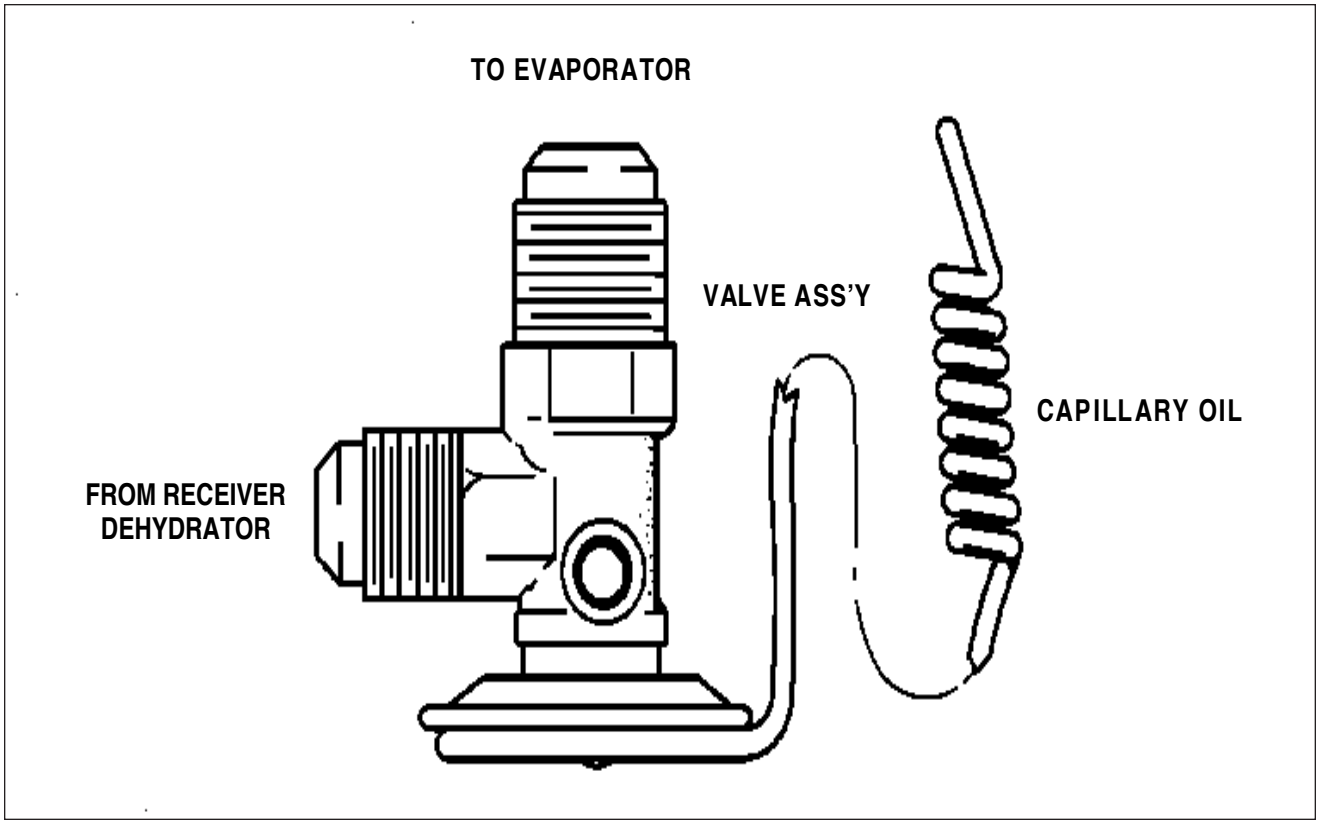

Expansion Valve
Figure 14

COOLING (cont.)

U. Expansion Valve (cont.)
(1) Removal

— NOTE —

Expansion valve is not repairable. If it is not serviceable it must be replaced with a new part.

(a) Remove necessary access panels and discharge system.
(b) Remove capillary coil from outlet line. Do not kink the capillary tube.
(c) Uncouple all related tube fittings. (See Special Servicing Procedures.)

(2) Installation.
(a) Install expansion valve in inlet line of evaporator core by coupling related fittings. (Seal all couplings with sealant applied to tube flanges only.) Torque fittings per Chart 4.)
(b) Secure capillary coil to the evaporator outlet line.
(c) Evacuate and charge system. (See Evacuating the System and Charging the System.) Check for leaks. (See Checking the System for Leaks.)
(d) Replace access panels.

V. Evaporator
The evaporator assembly consists of the evaporator core, receiver-dehydrator, expansion valve, circulating fan, and pressure switch together with necessary housing and plumbing. The housing is fabricated of thermoplastic material. Condensed moisture is dumped overboard through a hose clamped to a fitting on the bottom of the evaporator housing.

The evaporator assembly is located behind the cabin rear panel, attached to the mounting panel with 12 screws and washers and a bracket securing the back to the mounting panel.

(1) Removal
(a) Remove air conditioning filter cover, filter and rear access panels.

— CAUTION —

Discharge system before disassembling any components for service.

— CAUTION —

Environmental regulations may require use of a collection system when necessary to evacuate freon from system

(b) Uncouple liquid line from inlet side of receiver-dehydrator.
(c) Uncouple suction line from evaporator core outlet. (See Special Servicing Procedures.)
(d) Disconnect related electrical wires.
(e) Remove flexible air duct from housing outlet. Remove drain hose from housing.
(f) Remove temperature probe from evaporator housing.
(g) Remove screws attaching support bracket and evaporator housing to mounting panel.
(h) Remove the assembly through access hole in bulkhead.

COOLING (cont.)

V. Evaporator (cont.)
(2) Installation
(a) Cement gasket in place on flanges of evaporator housing. Attach large end of mounting gasket to back of housing.
(b) Install housing through access hole with air duct outlet on top. Mate mounting flanges to the mating surface of mounting panel and insert screws. Do ***not*** tighten.
(c) Line up mounting bracket with mating holes in mounting panel. Insert screws and tighten. Tighten screws the flange. Be certain gasket is in place. Flange must have an air tight seal.
(d) After applying Loctite refrigerant sealant to tube flanges only, couple suction and discharge lines to their respective fittings.
(e) Evacuate and charge system. (See Evacuating the System and Charging the System.)
(f) Check for leaks (see Checking the System for Leaks).
(g) When system is leak free, seal and install access panel on evaporator housing.
(h) Couple flexible air duct and drain tube.
(i) Make and check electrical connections. (Refer to Figure 21-17.)
(j) Check operation of blower and refrigerant systems.

— WARNING —

Whenever it is necessary to remove and replace cabin rear panel, it musty be replaced and sealed in original manner. If not, due to lower pressure in cabin, exhaust gases may seep into cabin.

(k) Install and seal rear bulkhead panels.
(l) Perform ground and in flight carbon monoxide (CO_2) tests with and without air conditioner operating. CO_2 intrusion shall not exceed 1 part in 20,000.

W. Pressure Relief Switch (Ranco)
The pressure relief switch automatically prevents the system from over pressurization by breaking the electrical circuit to the magnetic clutch, stopping the compressor until pressure is reduced. The switch is located in the line between the receiver and expansion valve. (Refer to Figure 15)

— NOTE —

Before the relief switch is removed, the air conditioning system must be discharged. (See Discharging.)

COOLING (cont.)

W. Pressure Relief Switch (Ranco) (cont.)

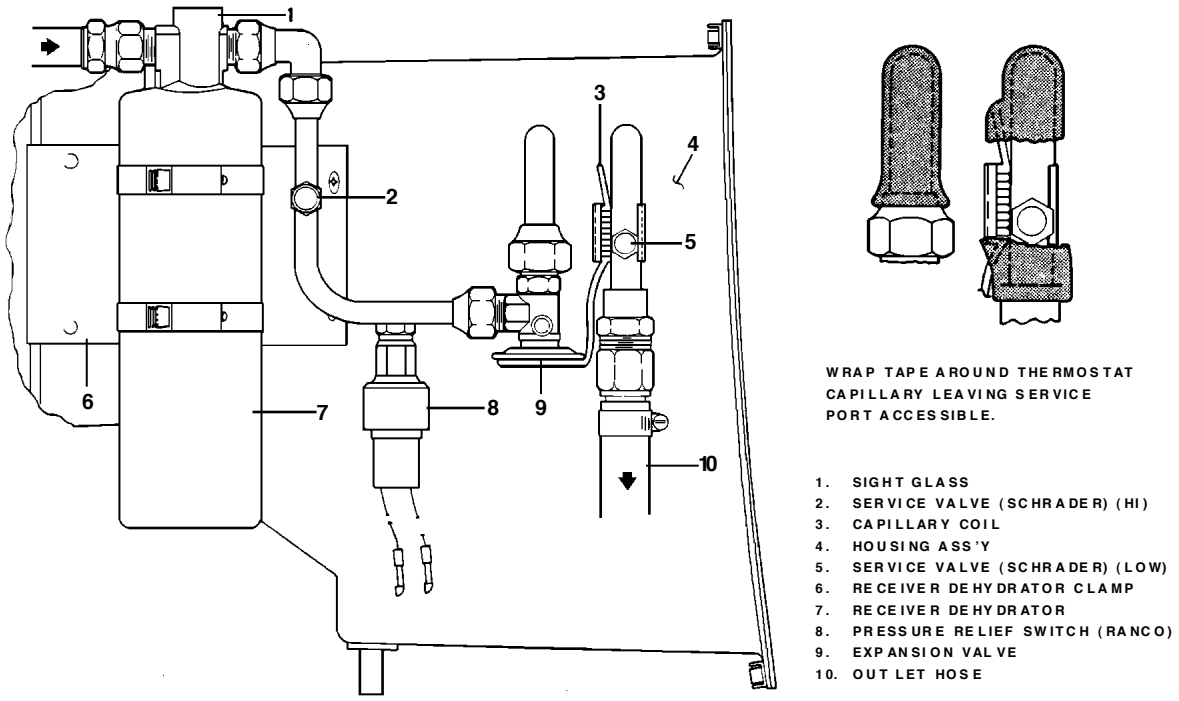

Components Installation
Figure 15

X. Air Conditioning Electrical Installation.
The electrical system, routing and component are installed and routed in the conventional aircraft manner. The wiring harness is connected to switches in the climate control center on the right side of the instrument panel. The harnesses crosses the instrument panel to the left side where two (2) wires are taken off for the compressor clutch. The harness then passes aft along the left side of the fuselage where it connects to the blower motor, pressure relief switch and the condenser actuating motor. (Refer to Figure 16)

Y. Adjustment of Throttle Switch
The throttle switch is mounted forward and below the throttle arm. Adjust switch so it will actuate at the last quarter inch of full open throttle travel.

Position switch so throttle arm contacts center of switch actuator button.

Z Fuse Replacement.
There are three fuses located behind the air conditioning system control panel. A 20 amp circuit breaker mounted in the circuit breaker panel protects the complete air conditioning electrical system.

COOLING (cont.)

X. Air Conditioning Electrical Installation. (cont.)

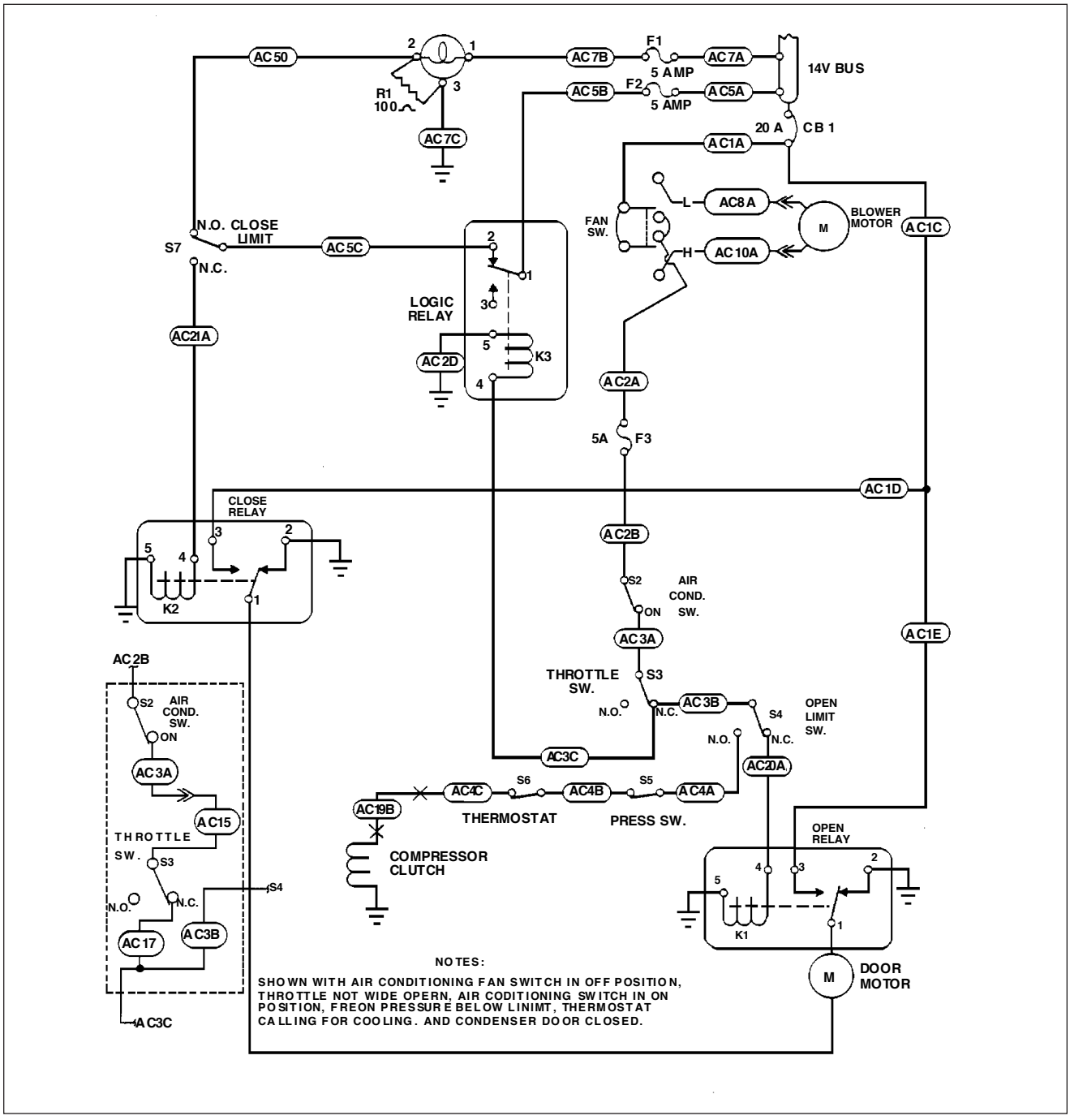

Air Conditioning Wiring Schematic PA32R-301 SP / PA32R-301T SP
Figure 16 (Sheet 1 of 2)

COOLING (cont.)

X. Air Conditioning Electrical Installation. (cont.)

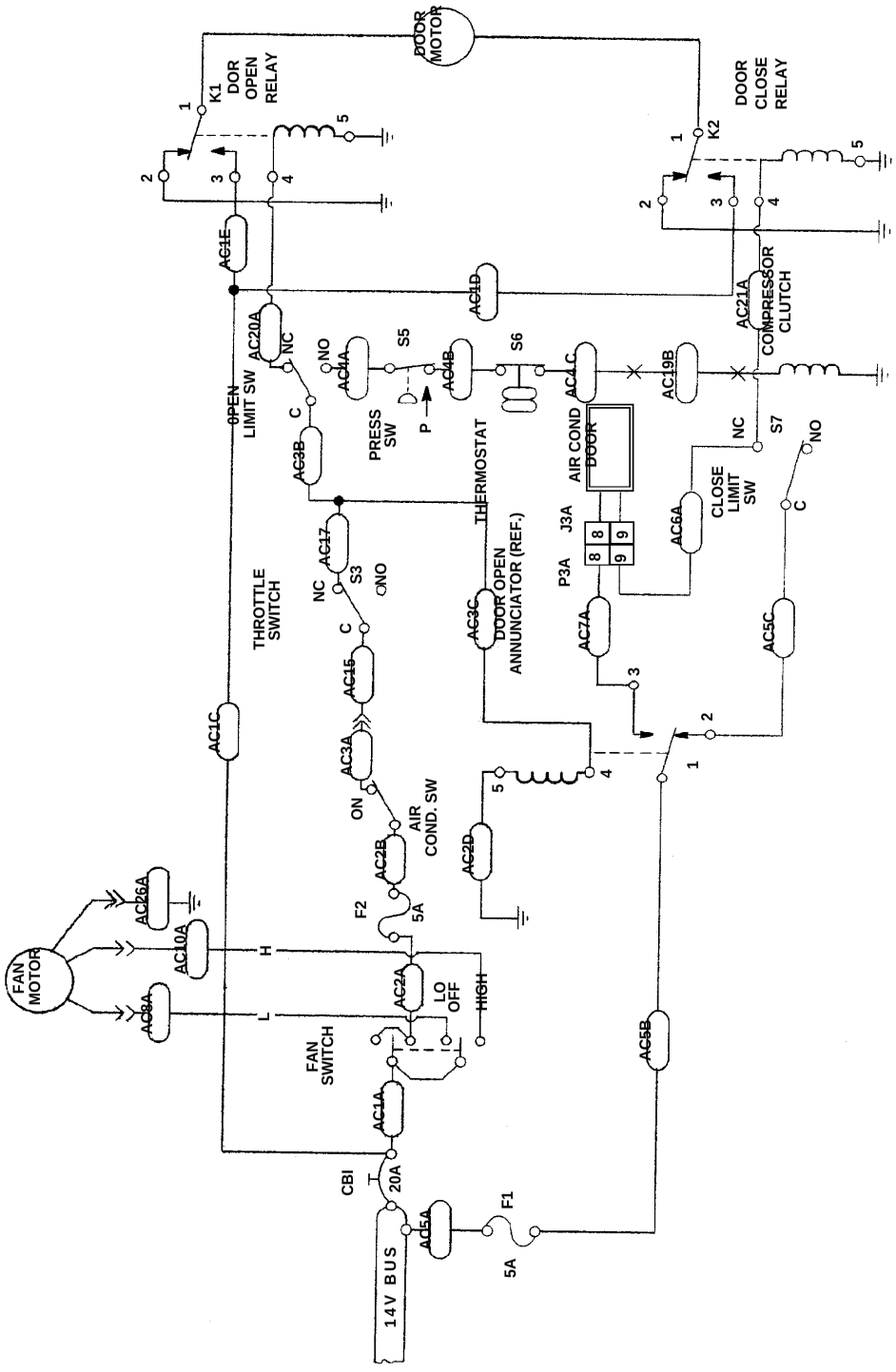

Air Conditioning Wiring Schematic PA32R-301 SP / PA32R-301T SP
Figure 16 (Sheet 1 of 2)

INTENTIONALLY LEFT BLAN

GRIDS IJ5 THROUGH 1J6
INTENTIONALLY LEFT BLANK

CHAPTER

22

AUTOFLIGHT

CHAPTER 22- AUTO FLIGHT

TABLE OF CONTENTS/EFFECTIVITY

CHAPTER SECTION	SUBJECT	GRID NO.	EFFECTIVITY
22-00-00	AUTO FLIGHT	11J9	July 1, 1993
22-00-00	General	11J9	July 1, 1993
22-00-00	Non-Piper A.F.C.S. Equipment Contacts	11J9	July 1, 1993
22-00-00	Piper A.F.C.S. Equipment	1J10	July 1, 1993

AUTO FLIGHT

A. General

Due to the wide variety of A.F.C.S. (Automated Flight Control System) options, it is mandatory to follow the service literature published by the individual manufacturer of the A.F.C.S. equipment installed in any particular airplane. This includes mechanical service such as; adjusting bridle cable tension, servo removal and installation, servo clutch adjustments, etc.

B. Non-Piper A.F.C.S. Equipment Contacts

Refer to the following list of Autopilot/Flight Director manufacturers to obtain service direction, parts support, and service literature.

(1) Bendix Avionics Division
2100 N.W. 62nd Street
Fort Lauderdale, Florida 33310
(305) 776-4100/TWX 5109559884

(2) Collins General Aviation Division
Rockwell International
Cedar Rapids, Iowa 52498
(319) 395-4648 Telex: 464-421

(3) Edo Corporation - Avionics Division
Box 610
Municipal Airport
Mineral Wells, Texas 76067
(817) 325-2517 Telex: 76067

(4) King Radio Corporation
P.O. Box 106
400 North Rodgers Road
Olathe, Kansas 66061
(913) 782-0400 Telex: 4-2299-Kingrad

(5) Sperry Flight Systems/Avionics Division
8500 Balboa Boulevard
P.O. Box 9028
Van Nuys, California 91409
(213) 894-8111 Telex: 65-1367

(6) Global Navigation
2144 Michelson Drive
Irvine, California 92715
(714) 851-0119

AUTO FLIGHT (Cont.)

C. Piper A.F.C.S. Equipment.
In the case of early models, Piper Autopilot equipment bears the Piper name, and the appropriate Piper Autopilot/Flight Director Service Manual shall be used.

— NOTE —

If a Roll Axis-only Autopilot is installed, or if no Autopilot is installed, consult the Piper Pitch Trim Service Manual 753 771 for manual electric pitch trim service information.

The following is a complete listing of Piper A.F.C.S. equipment service literature. It is imperative to correctly identify the AutoPilot system by "faceplate" model name, in order to consult the appropriate service manual. Each manual identifies the revision level and revision status as called out on the Master Parts Price List - Aerofiche published monthly by Piper. Consult the aircraft's parts catalog for replacement parts.

NAME	PIPER PART NO.
AutoControl I/II & Altimatic I/II	753 798
AutoControl III and Altimatic III and IIIB	753 723
AutoControl IIIB and AltiMatic IIIB-I	761 502
AltiMatic IIIC	761 602
AltiMatic V and V-1	761 525
AltiMatic V F/D and V F/D-1	761 526
AltiMatic X F.D./A.P./ & X A.P.	761 668
AutoFlite	753 720
AutoFlite II	761 481
Piper Pitch Trim (Manual-Electric)	757 771

PAGE INTENTIONALLY LEFT BLANK

CHAPTER

23

COMMUNICATIONS

CHAPTER 23 - COMMUNICATIONS

TABLE OF CONTENTS/EFFECTIVITY

CHAPTER SECTION	SUBJECT	GRID NO.	EFFECTIVITY
23-00-00	GENERAL	1J14	July 1, 1993
23-00-00	AVIONICS MASTER SWITCHING	1J14	July 1, 1993
23-00-00	PA32R-301 SP and PA32R-301T SP	1J14	July 1, 1993
23-00-00	PA323R-301 II HP	1J15	July 1, 1993
23-20-00	EMERGENCY LOCATOR TRANSMITTER (NARCO)	1J16	July 1, 1993
23-20-00	Narco ELT 10		
23-20-00	Battery Removal and Installation (ELT 10)	1J16	July 1, 1993
23-20-00	Testing Emergency Locator Transmitter (ELT 10)	1J18	July 1, 1993
23-20-00	Description, Operation and Testing of Pilot's Remote Switch (ELT 10 and ELT 910)	1J20	July 1, 1993
23-20-00	Narco ELT 910	1J20	
23-20-00	Battery Removal and Installation (ELT 910)	1J20	July 1, 1993
23-20-00	Testing Emergency Locator Transmitter (ELT 910)	1J21	July 1, 1993

GENERAL.

This chapter contains information necessary to perform operational checks of the Emergency Locator Transmitter (ELT), with and without a pilot's remote switch. Included are the appropriate removal and installation instructions to facilitate battery replacement.

The ELT is located under the dorsal fin aft of fuselage station 259.30. (Refer to Figures 2 and 3.)

The transmitter operates on the emergency frequencies of 121.5 and 243 MHz. Both frequencies are monitored by various FAA installations.

Electrical power for the ELT is totally supplied by its own self-contained battery. The battery must be replaced on or before the replacement date marked on battery pack label. The battery must also be replaced any time it has been used in an emergency situation or after more than one hour of accumulated test time.

AVIONICS MASTER SWITCHING

A. PA32R-301 SP and 32R-301T SP

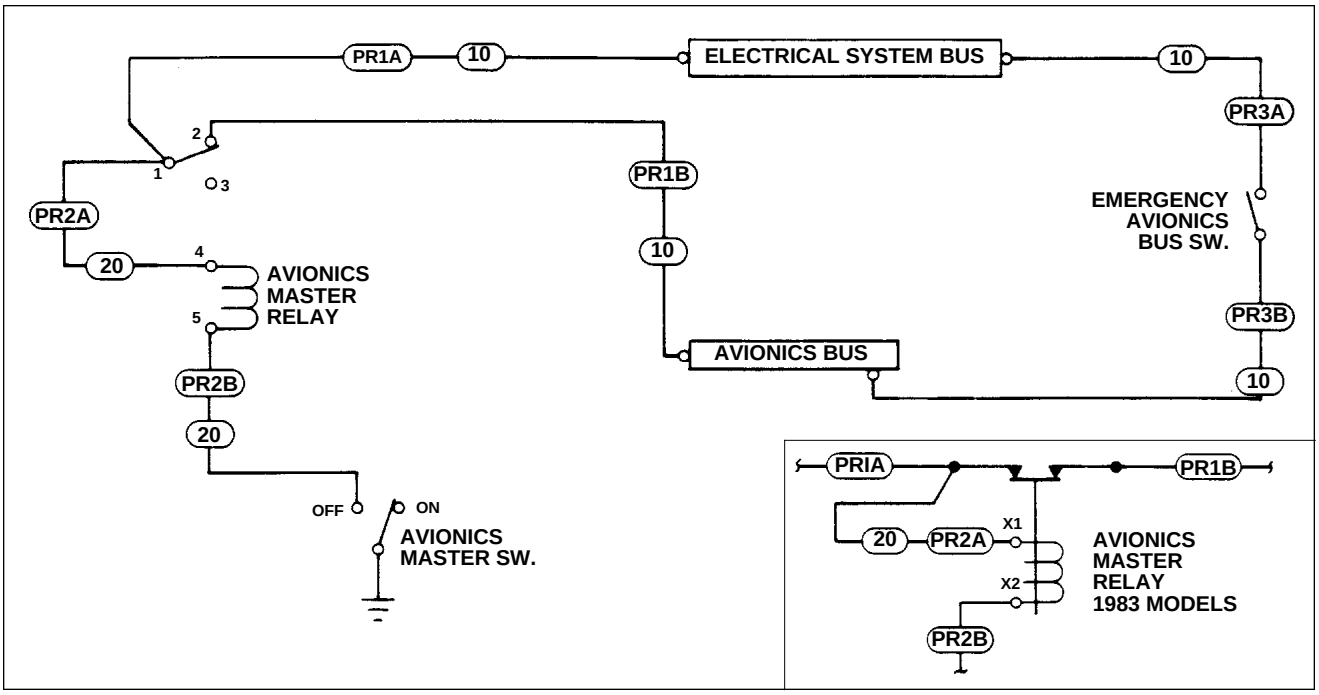

Avionics Master an Emergency Switch Circuit (PA32R-301 SP / 32R-301T SP)
Figure 1 (Sheet 1 of 2)

AVIONICS MASTER SWITCHING (Cont.)

B. PA32R-301 II HP

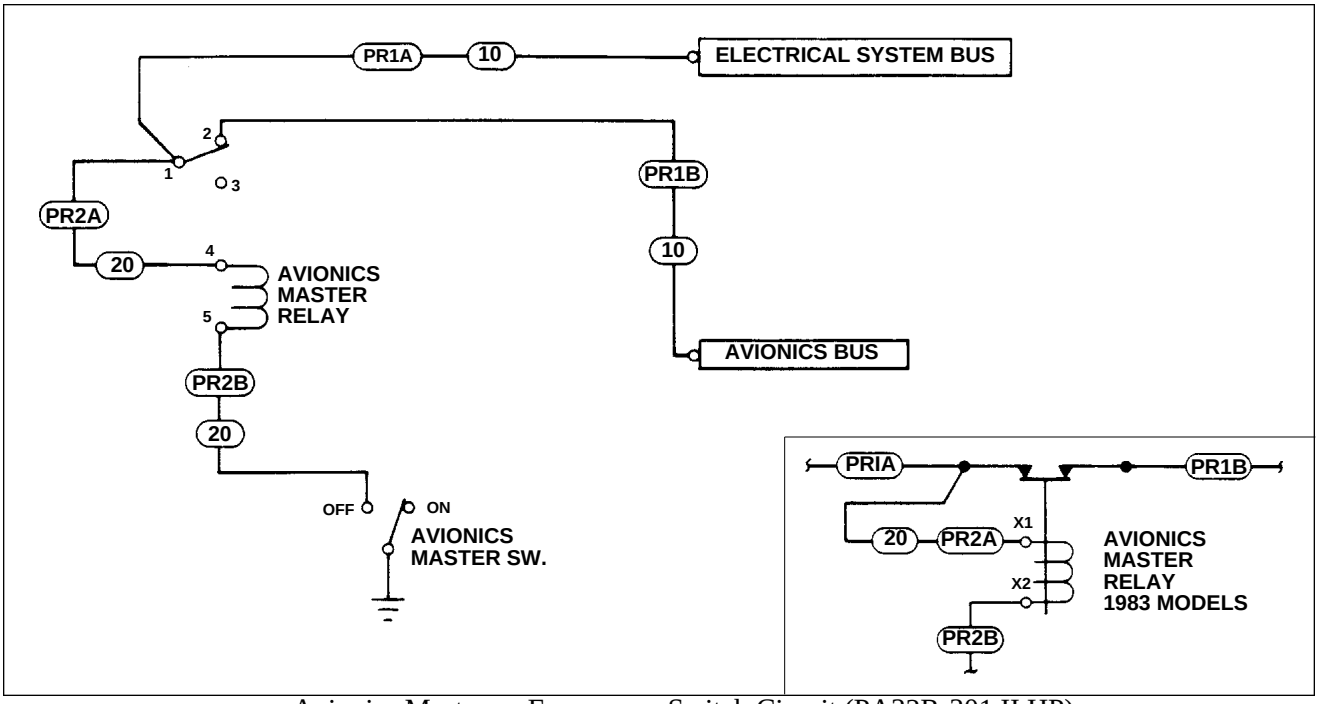

Avionics Master an Emergency Switch Circuit (PA32R-301 II HP)
Figure 1 (Sheet 2 of 2)

EMERGENCY LOCATOR TRANSMITTER (NARCO)

A. Narco ELT 10

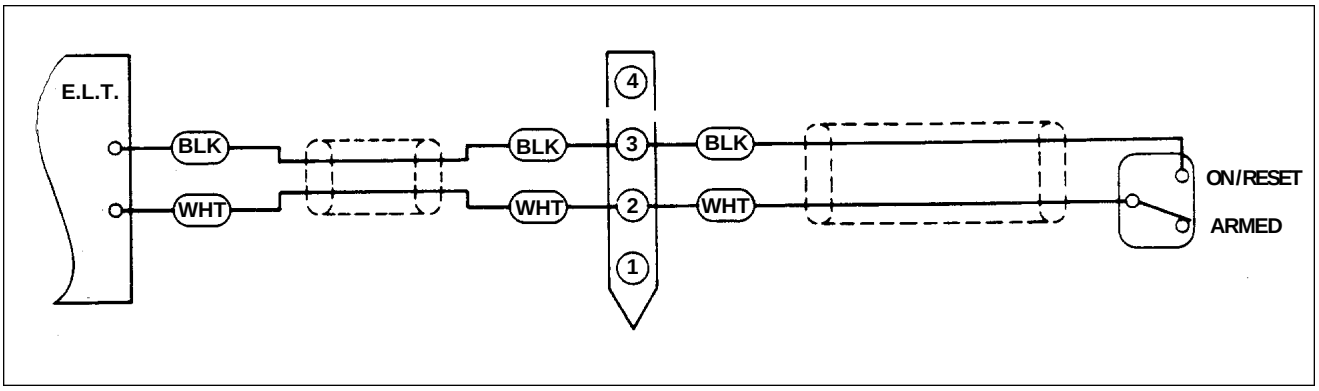

Emergency Locator Transmitter Schematic (Narco ELT 10)
(S/N's 32R-8013002 thru 32R-32R-8613005 and 3213001 thru 3213009
S/N's 32R-8029001 thru 32R-8629002 and 3229001 thru 3229002)
Figure 2 (1 of 2)

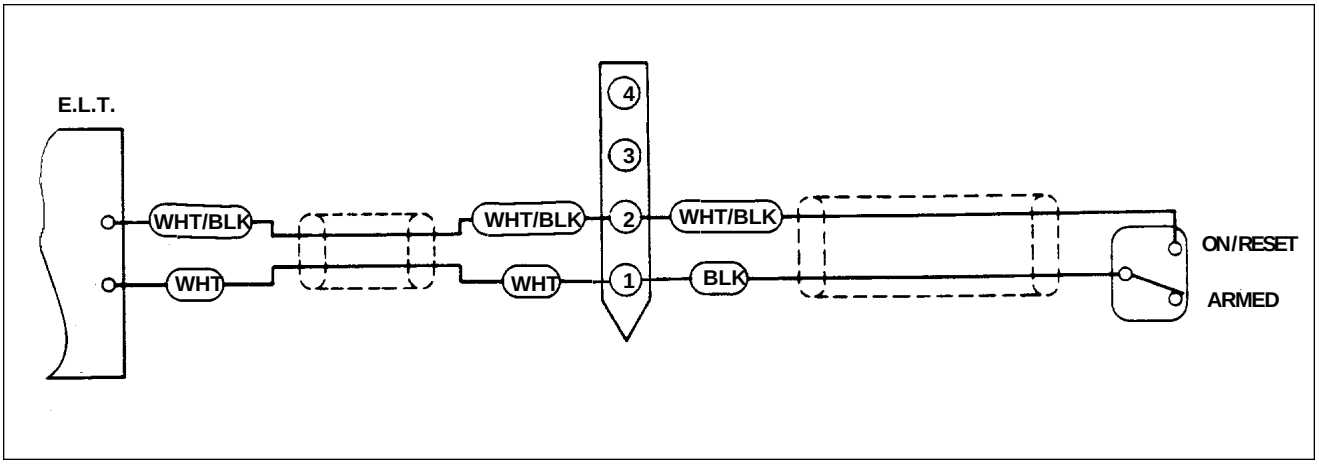

Emergency Locator Transmitter Schematic (Narco ELT 10)
(S/N's 3213010 thru 3213041 and 3229003)
Figure 2 (2 of 2)

(1) Battery Removal and Installation (ELT 10)
   (a) Remove the access panel on the dorsal fin.
   (b) Set the ON/OFF/ARM switch on the transmitter to OFF.
   (c) Disconnect antenna coaxial cable from ELT.
   (d) Remove ELT from its mounting bracket by releasing the latch on the strap and sliding the ELT off the bracket.
   (e) Extend the portable antenna. (Refer to Figure 2.)
   (f) Unscrew the four screws that hold the control head to the battery casing and slide apart.
   (g) Disconnect the battery terminals from the bottom of the circuit board.
   (h) Discard old battery pack. (DO NOT EXPOSE TO FLAME.)

EMERGENCY LOCATOR TRANSMITTER (NARCO) (cont.)

(1) Battery Removal and Installation (ELT 10) (cont.)

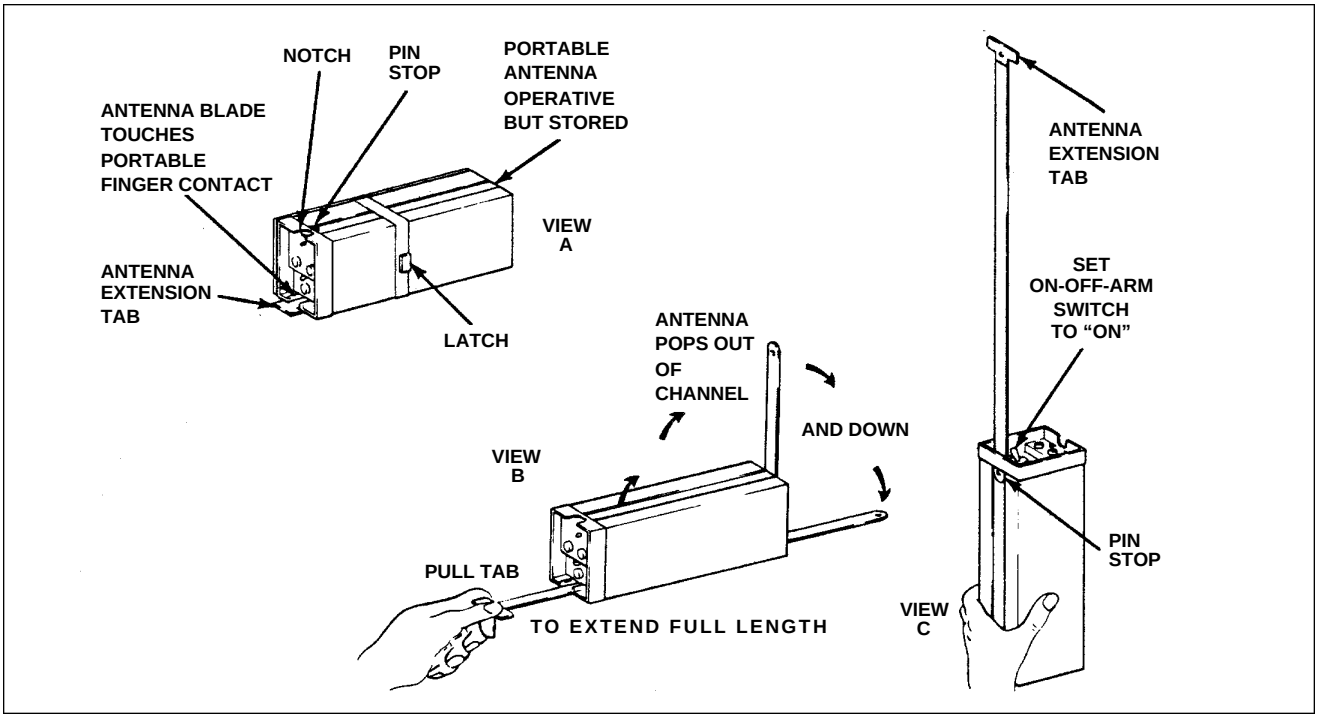

ELT Portable Folding Antenna (Narco ELT 10)
Figure 3

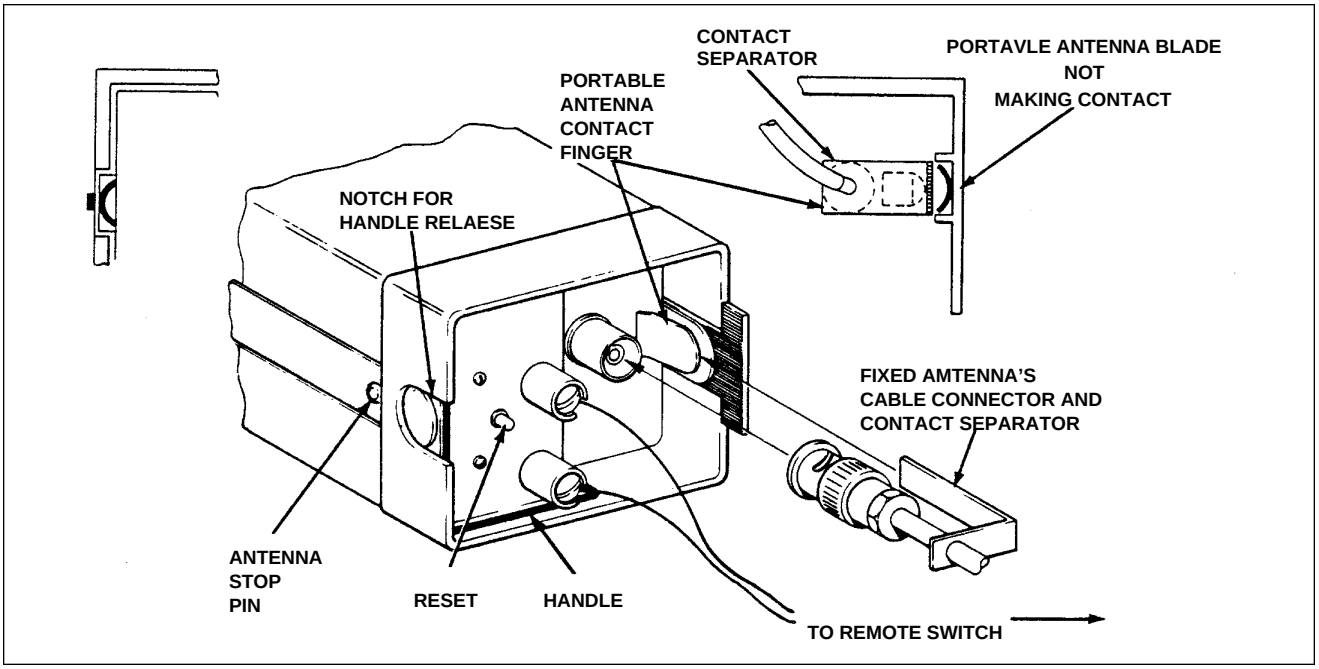

ELT Using Fixed Aircraft Antenna (Narco ELT 10)
Figure 4.

EMERGENCY LOCATOR TRANSMITTER (NARCO) (cont.)

(1) Battery Removal and Installation (ELT 10) (cont.)

— CAUTION —

The battery pack is shipped with a sealant on the inside lip so that a water tight seal will be retained. DO NOT REMOVE THIS SEALANT.

(i) Connect new battery pack terminals to the bottom of the circuit board.
(j) Insert control head section into battery pack being careful not to pinch any wires. Replace the four screws. If the four holes do not line up, rotate battery pack 180° and reinsert.
(k) Slide the portable antenna back into the stowed position.
(l) Place transmitter into its mounting bracket and fasten the strap latch.
(m) Connect the antenna coaxial cable to the ELT and ensure that the contact separator is inserted between the antenna contact finger and the portable antenna. (Refer to Figure 3.)
(n) Press RESET button and set ON/OFF/ARM switch to ARM.
(o) Make an entry in the aircraft logbook, including the new battery expiration date.
(p) A unit operational check may now be performed on the ELT. (Refer to Testing Emergency Locator Transmitter.)

— NOTE —

Inspect the external whip antenna for any damage. Avoid bending the whip. Any sharply bent or kinked whip should be replaced. Antenna damage may cause structural failure of whip in flight.

(2) Testing Emergency Locator Transmitter (ELT 10)
Conduct E.L.T. tests in a screen room or metal enclosure to ensure that electromagnetic energy is not radiated during testing. If a shielded enclosure is not available, perform tests in accordance with the following procedures:

— NOTE —

Consult FAA Advisory Circular AC 20-81 for detailed testing information and precautions

(a) Conduct test only during the first five minutes after any hour.
(b) If operational test must be made at any time other than the first five minutes after the hour, notify the nearest FAA traffic Control Tower or Flight Service Station prior to the test.
(c) Test should be no longer than three audio sweeps.
(d) If the antenna is removed, a dummy load should be substitued during the test.
1 Remove the access panel or cover to gain access to the transmitter.
2. Turn the aircraft master switch ON.
3. Turn the aircraft communications receiver volume up until a slight background noise is heard.

EMERGENCY LOCATOR TRANSMITTER (NARCO) (cont.)

(2) Testing Emergency Locator Transmitter (ELT 10) (cont.)

— NOTE —

If the aircraft is not fitted with a communications receiver, request that the nearest FAA facility listen for the E.L.T. signal.

4 Set the ON/ARM/OFF switch ***on the transmitter*** to the ON position. Keep the switch in this position for only a few seconds; then set to the OFF position. Return to the ARM position.

5 If ***transmitter*** is only labeled ON/ARM, set to ON position for a few seconds, then return to ARM position

— NOTE —

The test transmission should be received by the aircraft communications receiver and/or control tower or FAA Flight Service Station. During cold weather, there may be a slight delay before transmission occurs.

6 A properly functioning transmitter emits a characteristic downward swept tone.

7 When test is completed, ensure transmitter ON/ARM/OFF, or ON/ARM, switch is in the ARM position.

— NOTE —

Whenever unit is checked by moving transmitter ON/ARM/OFF switch from the ARM to ON position, it must first be moved to the OFF position before resetting to ARM position.

(e) Install access panel on dorsal fin aft of fuselage station 259.30 and secure with the appropriate screws.

B. Description, Operation, and Testing of Pilot's Remote Switch (ELT 10 and ELT 910)
Refer to Pilot's Operating Handbook.

EMERGENCY LOCATOR TRANSMITTER (NARCO) (cont.)

C. Narco ELT 910

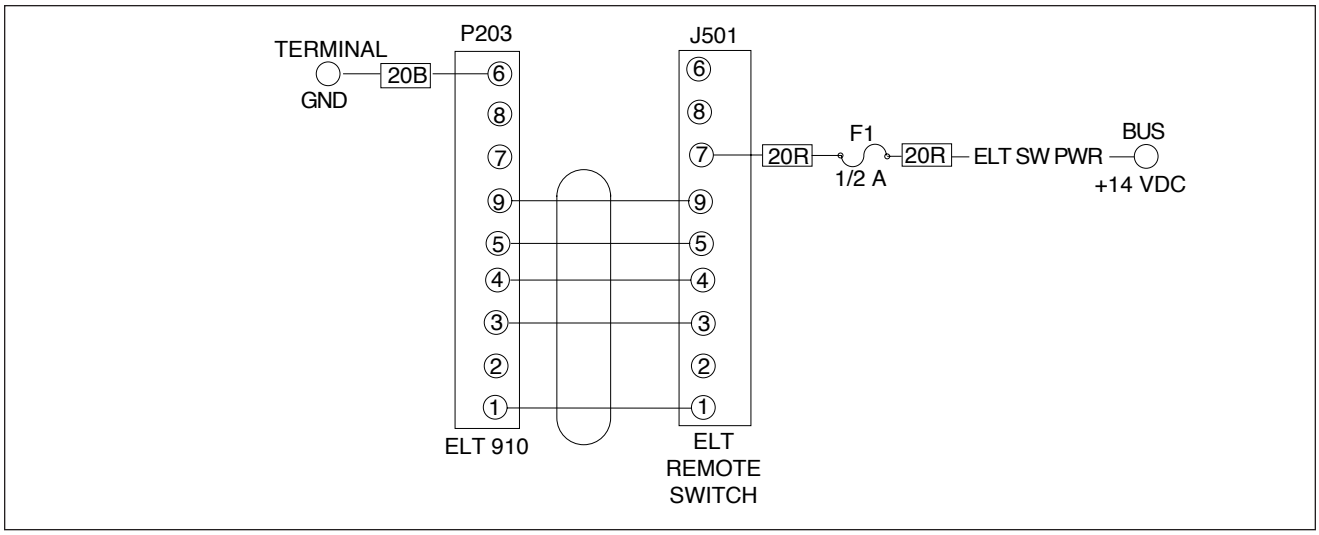

Emergency Locator Transmitter Schematic (Narco ELT 910)
(S/N's 3213042 and Up)
Figure 5

(1) Battery Removal and Installation (ELT 910)
   (a) Remove access panel on dorsal fin.
   (b) Set ON/OFF/ARM switch on ***transmitter*** to OFF.
   (c) Disconnect antenna coaxial cable from ELT.
   (d) Disconnect wiring harness connector from ELT.
   (e) Remove ELT from its mounting tray.
   (f) Remove 8 flat head screws from unit. (Refer to Figure 6.)
   (g) ***Carefully*** separate unit into two sections.
   (h) Unsnap battery connector (connector toward back end of circuit board). (Refer to Figure 6.)
   (i) ***Carefully*** remove battery pack (contained in white foam jacket) from the ELT.
   (j) Cut tape holding the two halves of foam together and remove old battery pack.
   (k) Install new battery pack in foam jacket. Tape foam halves together with a good quality glass filament tape.
   (l) Install battery pack assembly into ELT. Plug connector into circuit board.
   (m) Slide the two unit section together. Ensure red gasket in header is sitting flat.
   (n) Secure with 8 new screws provided with replacement battery. Ensure all 8 screws are snugged up.
   (o) Install ELT into tray in airplane. Perform tests as specified below.

— NOTE —

Inspect the external whip antenna for any damage. Avoid bending the whip. Any sharply bent or kinked whip should be replaced. Antenna damage may cause structural failure of whip in flight.

EMERGENCY LOCATOR TRANSMITTER (NARCO) (cont.)

(2) Testing Emergency Locator Transmitter (ELT 10)

— NOTE —

Consult FAA Advisory Circular AC 20-81 for detailed testing information and precautions

(a) Conduct test only during the first five minutes after any hour.
(b) If operational test must be made at any time other than the first five minutes after the hour, notify the nearest FAA traffic Control Tower or Flight Service Station prior to the test.
(c) Test should be no longer than three audio sweeps.
(d) If the antenna is removed, a dummy load should be substituted during the test.
1 Remove access panel or cover to gain access to transmitter.
2. Turn aircraft master switch ON. Turn the aircraft communications receiver ON and tune to 121.5 mhz.
3. Turn receiver volume up until a slight background noise is heard. If equipped, automatic squelch must be overridden.
4 If aircraft is not fitted with a communications receiver, request the nearest FAA facility to listen for E.L.T. signal.
5 Set ON/ARM/OFF switch ***on the transmitter*** to the ON position for approximately 2 seconds. Return to OFF, then ARM position.
6 Test transmission should be received by aircraft communications receiver and/or FAA facility. During cold weather, there may be a slight delay before transmission occurs.
7 A properly functioning transmitter emits a characteristic downward swept tone.
8 When test is completed, ensure transmitter ON/ARM/OFF is in the ARM position. Whenever unit is checked by moving transmitter ON/ARM/OFF switch from ARM to ON position, it must first be moved to OFF position before resetting to ARM position.
(e) Install access panel on dorsal fin aft of fuselage station 259.30 and secure with the appropriate screws.

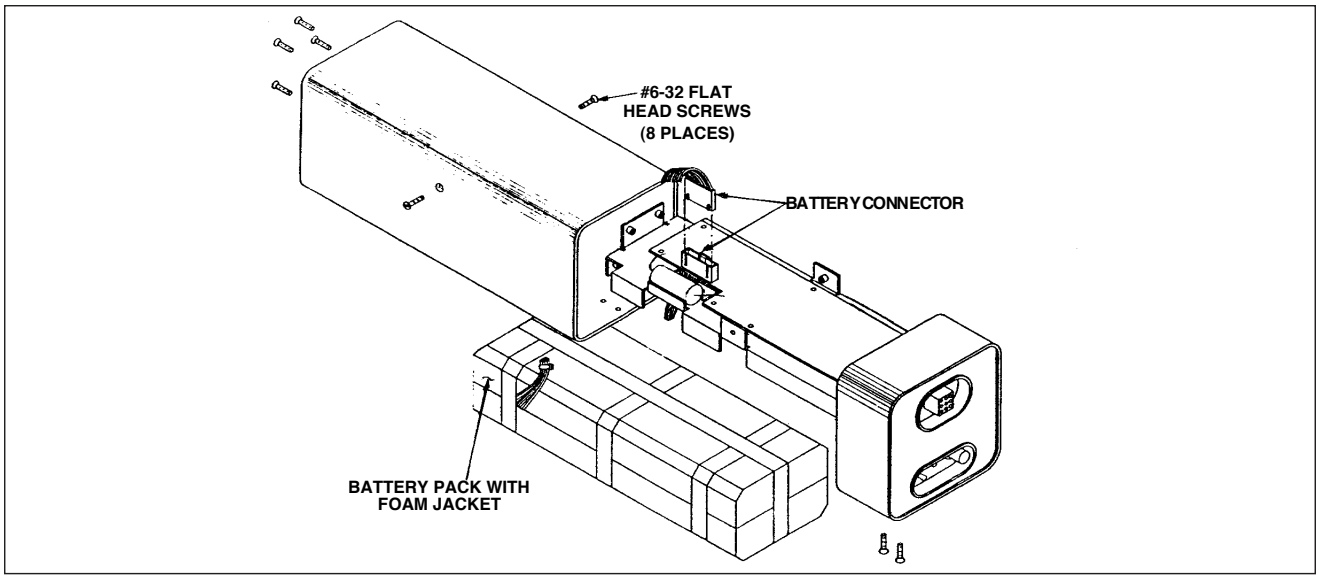

ELT 910 Battery Pack
Figure 6

CHAPTER

24

ELECTRICAL POWER

CHAPTER 24 - ELECTRICAL POWER

TABLE OF CONTENTS/EFFECTIVITY

CHAPTER SECTION	SUBJECT	GRID NO.	EFFECTIVITY
	— NOTE —		
	Refer to Chapter 91 for all wiring diagrams (Schematics)		
24-00-00	ELECTRICAL POWER	1K1	July 1, 1993
24-00-00	General	1K1	July 1, 1993
24-00-00	Description and Operation	1K1	July 1, 1993
24-30-00	D.C. GENERATION	1K3	July 1, 1993
24-30-00	Troubleshooting (Electrical System)	1K3	July 1, 1993
24-30-00	60 Amp Prestoliote Alternator System	1K8	July 1, 1993
24-30-00	Description	1K8	July 1, 1993
24-30-00	Precautions	1K9	July 1, 1993
24-30-00	Alternator Nomenclature	1K10	July 1, 1993
24-30-00	Checking Alternator System	1K10	July 1, 1993
24-30-00	Service Procedures	1K12	July 1, 1993
24-30-00	Overhaul of Altenator	1K12	July 1, 1993
24-30-00	Disassembly of Alternator	1K13	July 1, 1993
24-30-00	Inspection and Testing of Components	1K14	July 1, 1993
24-30-00	Assembly of Alternator	1K15	July 1, 1993
24-30-00	Testing Alternator	1K17	July 1, 1993
24-30-00	Checking Alternator Belt Tension	1K18	July 1, 1993
24-30-00	Slip Torque Method	1K18	July 1, 1993
24-30-00	Deflection Method	1K18	July 1, 1993
24-30-00	Prestolite Alternator Belt Tension	1K19	July 1, 1993
24-30-00	90 Amp Ford Alternator System	1K19	July 1, 1993
24-30-00	Description of Alternator	1K19	July 1, 1993
24-30-00	Precautions	1K23	July 1, 1993
24-30-00	On Aircraft Check of Alternator System	1K24	July 1, 1993
00	Visual Inspection	1K24	July 1, 1993
24-30-00	Ammeter Prove-Out Test	1K24	July 1, 1993
24-30-00	Battery Supply Voltage Test	1K24	July 1, 1993
24-30-00	Voltage Output No-Load Test	1K24	July 1, 1993
24-30-00	Voltage Output Load Test	1L1	July 1, 1993
24-30-00	Alternator Bench Test Procedures	1L2	July 1, 1993
24-30-00	Rectifier Ground and *Positive* Diode Test	1L2	July 1, 1993
24-30-00	Stator Ground and *Negative* Diode Test	1L2	July 1, 1993
24-30-00	Field Circuit Open or Ground Test	1L4	July 1, 1993

CHAPTER 24 - ELECTRICAL POWER

TABLE OF CONTENTS/EFFECTIVITY

CHAPTER SECTION	SUBJECT	GRID NO.	EFFECTIVITY
24-30-00	Overhaul of Alternator(FORD)	1L5	July 1, 1993
24-30-00	Disassembly	1L5	July 1, 1993
24-30-00	Cleaning and Inspection	1L8	July 1, 1993
24-30-00	Rotor Continuity Test	1L8	July 1, 1993
24-30-00	Rotor Ground Test	1L10	July 1, 1993
24-30-00	Stator Continuity Test	1L10	July 1, 1993
24-30-00	Stator Ground Test	1L11	July 1, 1993
24-30-00	Diode Testing	1L11	July 1, 1993
24-30-00	Assembly Procedure	1L12	July 1, 1993
24-30-00	Installation	1L16	July 1, 1993
24-30-00	Adjusting Alternator Belt Tension	1L16	July 1, 1993
24-30-00	Battery Service	1L16	July 1, 1993
24-30-00	Battery Removal	1L17	July 1, 1993
24-30-00	Battery Installation	1L17	July 1, 1993
24-30-00	Testing Battery	1L17	July 1, 1993
24-30-00	Battery Charging	1L18	July 1, 1993
24-30-00	Battery Corrosion Prevention	1L18	July 1, 1993
24-30-00	Checking Voltage Regulator	1L19	July 1, 1993
24-30-00	Checking Overvoltage Relay	1L20	July 1, 1993
24-40-00	EXTERNAL POWER	1L23	July 1, 1993
24-40-00	Operation of External Power Receptacle	1L23	July 1, 1993
24-50-00	ELECTRICAL SYSTEM LOAD DISTRIBUTION	1L24	July 1, 1993
24-50-00	Electrical System Loads	1L24	July 1, 1993

ELECTRICAL POWER

A. General

This chapter contains instructions for correcting difficulties which may occur in the electrical system. It includes a general description and function of each part of the system along with test and adjustments of the various components.

B. Description and Operation

The electrical system is a 14-volt, direct current, single wire, negative ground system. All electrical equipment is grounded to the metal structure of the airplane, therefore, the structure takes the place of the second wire. A 12-volt battery is incorporated in the system to furnish power for starting and as a reserve power source in case of alternator failure. The battery and alternator are both connected to the bus bar, from which all electrical equipment is powered, with the exception of the starter which receives its power from the load side of the battery. The master switch controls the battery relay and field circuit. The master switch must be on before any electrical equipment will operate. The airplane can be equipped with standard navigation lights, rotating beacon and one landing light located in the nose cowl.

Airplanes equipped with electric propeller and windshield deicers will have a 90 Amp (Ford) alternator installed. Refer to the specific service data within the chapter.

THIS PAGE INTENTIONALLY LEFT BLANK

D.C. GENERATION

A. Troubleshooting

— WARNING—

All checks and adjustments of the alternator and/or its components should be made with the engine stopped. Therefore, to complete some checks or adjustments, it will be necessary to remove these units from the airplane and place on a test stand.

Typical electrical system problems are listed in Chart 1 along with their probable causes and suggested remedies. The wiring diagrams included in Chapter 91 will give a physical breakdown of the different electrical circuits used in the airplane.

After the trouble has been corrected, check the entire electrical system for security and operation of its components.

CHART 1
TROUBLESHOOTING (ELECTRICAL SYSTEM) (Sheet 1 of 5)

Trouble	Cause	Remedy
Zero output indicated on ammeter regardless of rpm (refer to alternator system test procedure)	Open field circuit	With the battery switch turned on, check for battery voltage from the airplane's main bus through the entire field circuit to the alternator field terminal. Measure the voltage from the ground (-) to the following points (+) in sequence: bus bar, field circuit breaker (5A), field terminals of master switch voltage regulator and alternator field terminal. Interruption of voltage through any of these points isolates the faulty component or wire which must be replaced. (See wiring schematic, Chapter 91.)
	Open output circuit.	With the battery switch turned on, check for battery voltage from the airplane's main bus through the entire output circuit to the alternator battery

D.C. GENERATION (cont.)

A. Troubleshooting (cont.)

CHART 1
TROUBLESHOOTING (ELECTRICAL SYSTEM) (Sheet 2 of 5)

Trouble	Cause	Remedy
Zero output indicated on ammeter regardless of rpm (refer to alternator system test procedure). (continued)	Open output circuit. (continued)	post. Measure voltage from ground (-) to the following points (+) in sequence: bus bar, output current limiter, ammeter, and alternator battery post. Interruption of voltage through any of these points isolates the faulty component or wire which must be replaced. (See wiring schematic, Chapter 91.)
		Open circuit in alternator output will usually burn out ALT annunciator and the 50 ohm resistor. Check 5.0 amp in line fuse
	Open field winding in alternator.	Disconnect field terminal of alternator from field wiring and check for continuity from field terminal to ground with ohmmeter (20-100 ohms) depending on brush contact resistance.
		— CAUTION — ***Turn magneto switch to off before turning prop.***
		(Pull propeller slowly by hand turning alternator rotor through 360 of travel.)
		If resistance is high, check brushes for spring tension and excessive wear and replace if necessary. If brushes are okay and field reads open, replace alternator.

D.C. GENERATION (cont.)

A. Troubleshooting (cont.)

CHART 1
TROUBLESHOOTING (ELECTRICAL SYSTEM) (Sheet 3 of 5)

Trouble	Cause	Remedy
Output indicated on ammeter does not meet minimum values specified in alternator system test procedure.	Faulty voltage regulator.	Start engine, turn on load (ref. alternator test procedure), set throttle at 2300 rpm. Check voltage at buss bar [convenient check point, remove cigar lighter and check from center contact (+) to ground (-). Voltage should be 13.5 volts minimum. If voltage is below this value, replace regulator.
.	High resistance connections in field or output circuit.	Check visually for loose binding posts at the various junction points in system, alternator battery post, lugs on ammeter, connections at voltage regulator, circuit breaker, etc. (See wiring schematic, Chapter 91.) Examine crimped terminal ends for signs of deterioration at crimp or strands of broken wire at crimp. Tighten any loose binding posts or replace bad wire terminals.
	Open rectifier.	If any of the six rectifiers pressed pressed into the rear bell housing of the alternator open up internally, it will result in a definite limitation on the current that can be drawn from the alternator. After having checked the previous causes of low output it can be assumed that a faulty rectifier exists. See paragraph titled Inspection and Testing of Components

D.C. GENERATION (cont.)

A. Troubleshooting (cont.)

CHART 1
TROUBLESHOOTING (ELECTRICAL SYSTEM) (Sheet 4 of 5)

Trouble	Cause	Remedy
Field circuit breaker trips.	Short circuit in field circuit.	Disconnect field wiring at terminal of alternator. turn on master switch. If breaker continues to trip, disconnect each leg of field circuit, working from alternator towards the circuit breaker until breaker can be reset and will hold. Replace component or wire which was isolated as defective. (See wiring schematic, Chapter 91.)
	Short circuit in field winding of alternator	Disconnect field wiring at terminal of alternator. Turn on master switch. Set breaker, and if breaker fails to trip, this isolates short circuit to field of alternator itself. Check brush holders for shorting against frame. If there are no obvious signs of a physical short circuit at field terminal or brush holder, replace alternator ***– NOTE –*** ***Intermittent short circuit.*** Internal short circuit of the field can occur at various positions of the rotor, therefore, reconnect field, reset breaker. ***CAUTION*** ***Turn magneto switch to off before turning propeller*** Pull propeller slowly by hand turning alternator rotor through 360 of travel. Observe circuit breaker for signs of tripping.

D.C. GENERATION (cont.)

A. Troubleshooting (cont.)

CHART 1
TROUBLESHOOTING (ELECTRICAL SYSTEM) (Sheet 5 of 5)

Trouble	Cause	Remedy
Ammeter indicates 60 amps at 1400 rpm and above, ALT annunciator light on.	Short to ground in alternator output wiring	Check condition of teflon insulators on feet of diode heat sink. When the mounting screws are over torqued they can cut through insulators causing a short-to-ground. Check other wiring for chafing, etc.
Excessive ammeter fluctuation.	Excessive resistance in field circuit.	Check all connections and wire terminals in field circuit for deterioration such as loose binding posts, broken wire strands at terminals, etc. Tighten all connections and replace faulty terminals.
	High field circuit resistance.	If problem persists, jump across the terminals of the following components one at a time until the faulty unit is isolated. a. Field 5-amp (alternator circuit protector). b. Alternator switch. c. Overvoltage relay.
	Defective voltage regulator.	Replace voltage regulator.
	Faulty grounds.	Completely clean all corrosion from grounding points.

D.C. GENERATION (cont.)

B. 60 Amp Prestolite Alternator System (Refer to Figure 1.)

(1) Description

The principal components of the alternator are the brush holder assembly, the slip ring end head, the rectifiers, the stator, the rotor and the drive end head.

(a) The brush and holder assembly contains two brushes, two brush springs, a brush holder and insulator. One brush is connected to a terminal stud and is insulated from ground. The other brush is connected to ground through the brush holder. The brush and holder assembly can be removed for inspection or brush replacement purposes.

(b) The slip ring end head provides the mounting for rectifiers and rectifier mounting plate, output and auxiliary terminal studs, and brush and holder assembly. The slip ring end head contains a roller bearing and outer race assembly and a grease seal.

(c) Rectifiers used in these units are rated at 150 peak inverse voltage (P.I.V.) minimum for transient voltage protection. Three positive rectifiers are mounted in the rectifier mounting plate. The three negative rectifiers are mounted in the slip ring end head. Each pair of rectifiers is connected to a stator lead with high temperature solder. Stator leads are anchored to the rectifier mounting plate with epoxy cement for vibration protection.

(d) The stator contains a special lead which is connected to the center of the three phase windings. The stator has been treated with a special epoxy varnish for high temperature resistance.

(e) The rotor contains the slip ring end bearing inner race and spacer on the slip ring end of the shaft. The rotor winding and winding leads have been specially treated with a high temperature epoxy cement to provide vibration and temperature resistance characteristics. High temperature solder is used to secure the winding leads to the slip rings.

(f) The drive end head supports a sealed, prelubricated ball bearing in which the drive end of the rotor shaft rotates.

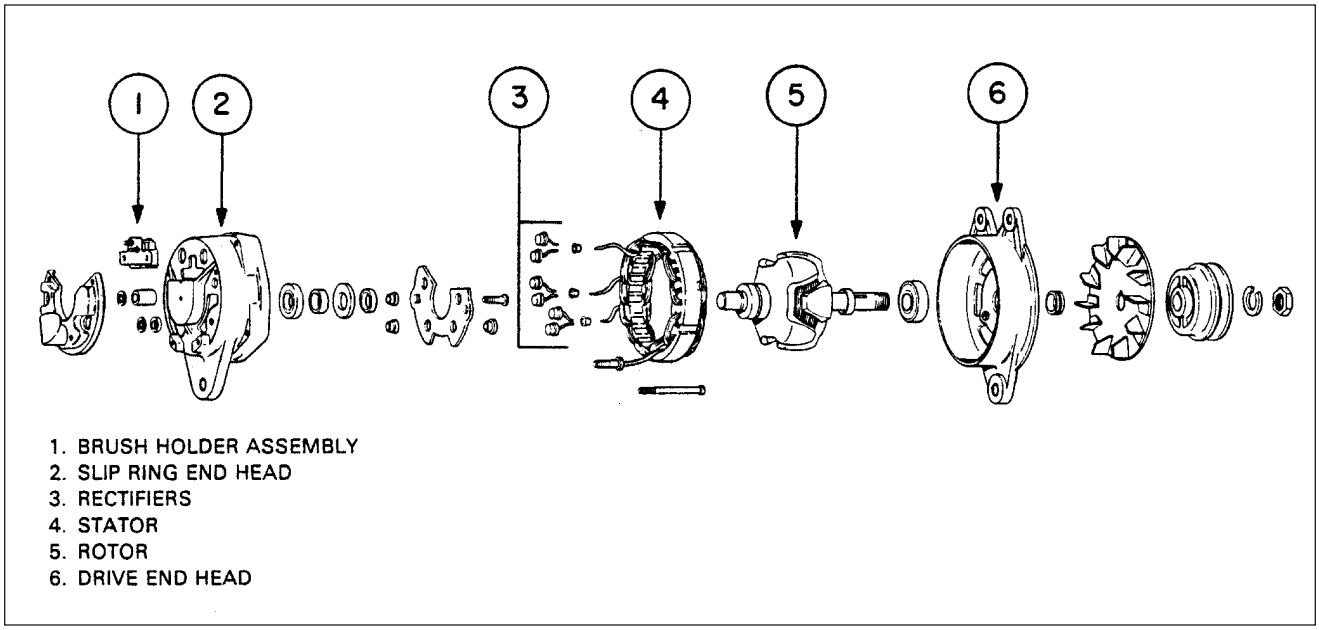

Exploded View of Alternator (Presolite)
Figure 1

D.C. GENERATION (cont.)

(2) Precautions

The following precautions are to be observed when testing or servicing the electrical system.

(a) Disconnect battery before connecting or disconnecting test instruments, except voltmeter, or before removing or replacing any unit or wiring. Accidental grounding or shorting at regulator, alternator, ammeter or accessories, will cause severe damage to units and/or wiring.

(b) Do not operate alternator on an open circuit with the rotor winding energized.

(c) Do not attempt to polarize alternator. No polarization is required. Any polarization attempt may result in damage to alternator, regulator or circuits.

(d) Grounding alternator output terminal may damage alternator and/or circuit and components.

(e) Do not attempt to polarize alternator. No polarization is required. Any polarization attempt may result in damage to alternator, regulator or circuits.

(f) If booster battery or fast charger is used, its polarity must be connected correctly to prevent damage to electrical system components.

— NOTE —

If a solderless terminal on an aluminum cable is loose, corroded or otherwise unsatisfactory, it is recommended that the complete cable assembly be replaced instead of replacing or repairing the solderless terminal. Should replacement of the complete assembly not be practical, it is permissible to replace the aluminum cable assembly with a copper cable assembly which is two sizes smaller (EX: AL-1 aluminum cable assembly is replaced with an AN-3 copper cable assembly). The new cable should be installed in accordance with AC-43-13-2A.

Brush Installation

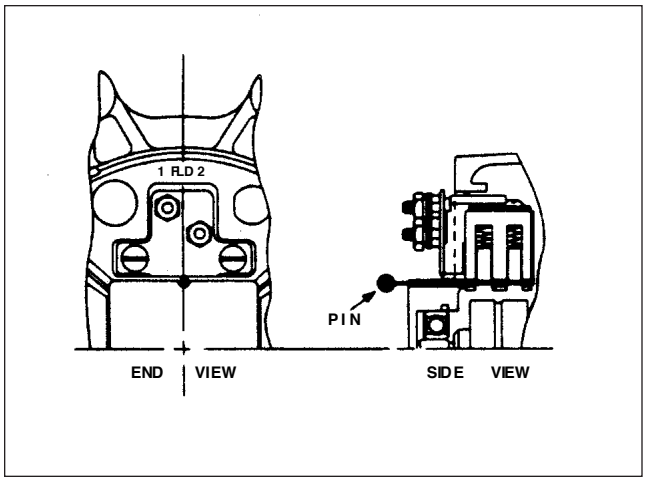

Figure 2

Internal Wiring Diagram

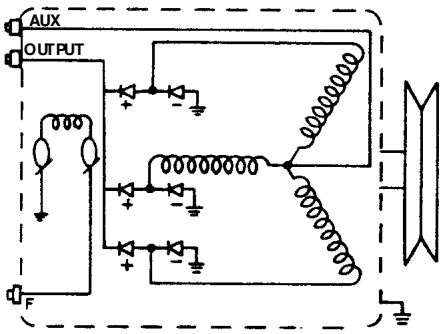

Figure 3

D.C. GENERATION (cont.)

(3) Alternator Nomenclature

(a) Bearings: These units have a sealed ball bearing at the drive end and a two-piece roller bearing at the slip ring end. The inner race is pressed onto the rotor shaft and the rest of the bearing is in the slip ring end head. When the unit is assembled, the inner race aligns with the bearing. When the bearing is replaced, the new inner race must be installed on the rotor shaft.

(b) Lubrication: The slip ring end bearing should be lubricated whenever the alternator is disassembled. The bearing should be thoroughly cleaned and repacked with Shell Alvania No. 2 or an equivalent bearing lubricant. The cavity behind the bearing should be packed one-third to one-half full with the same lubricant.

(c) Brushes: These units have a separate brush holder assembly that is installed after the alternator has been assembled. The brush holder has a small hole that intersects the brush cavities. Use a pin or a piece of wire, as shown in Figure 2 to hold the brushes in the holder during assembly. Remove the pin after the brush holder retaining screws have been tightened. Make a continuity check to be sure the brushes are seated against the slip rings.

(d) Drive Pulley: Torque the drive pulley retaining nut to 35 foot-pounds.

(4) Checking Alternator System

With all electrical equipment off (except master switch) the ammeter will indicate the amount of charging current demanded by the battery. This amount will vary, depending on the percentage of charge in the battery at the time. As the battery becomes charged, the amount of current displayed on the ammeter will reduce to approximately two amperes. The amount of current shown on the ammeter will tell immediately whether or not the alternator system is operating normally, if the following principles are kept in mind.

— NOTE —

The amount of current shown on ammeter is load in amperes that is demanded by the electrical system from the alternator. As a check, for example assume a condition where the battery is demanding 10 amperes charging current, then switch on the landing light. Note the value in amperes placarded on the circuit breaker panel for the landing light circuit breaker (10 amps) and multiply this by 80 percent, you will arrive at a current of 8 amperes. This is the approximate current drawn by the light. Therefore, when the light is switched on, there will be an increase of current from 10 to 18 amperes displayed on the ammeter. As each unit of electrical equipment is switched on, the current will add up and the total, including battery, will appear on ammeter.

D.C. GENERATION (cont.)

(4) Checking Alternator System (cont.)
Using the example that the airplane's maximum continuous load with all equipment on is approximately 48 amperes for the 60 ampere alternator. This approximate 48 ampere value, plus approximately two amperes for a fully charged battery, will appear continuously under these flight conditions. If the ammeter reading were to go much below this value, under the aforementioned conditions, trouble with the alternator system would be indicated and corrective action should be taken by switching off the least essential equipment.

The following test procedure could be helpful in locating faulty components:

(a) Ensure that the airplane is positioned so that the prop blast will not interfere with other operations going on near by. Start engine and set throttle for 1000 to 1200 rpm.
(b) Switch on the following loads and observe the ammeter output increase as indicated.
1 Rotating beacon - 3 to 6 amps.
2 Navigation and instrument lights (bright position) - 4 to 6 amps.
3 Landing light - 7 to 9 amps.

If alternator does not meet above indications, refer to troubleshooting Chart 1. Follow troubleshooting procedure outlined on the chart in a step by step fashion checking each cause and isolation procedure under a given trouble before proceeding to the next step.

On airplanes without night-flying equipment, load required by test can be simulated by connecting a lamp-bank load consisting of 8 landing lights wired in parallel from main bus (+) to airframe ground (-). (Refer to Figure 4) or 8, 3-ohm, 100-watt resistors.

— NOTE —

On air-conditioned aircraft, full alternator output on ground must be limited to not more than 10 minutes. Refer to Pilot's Operating Handbook.

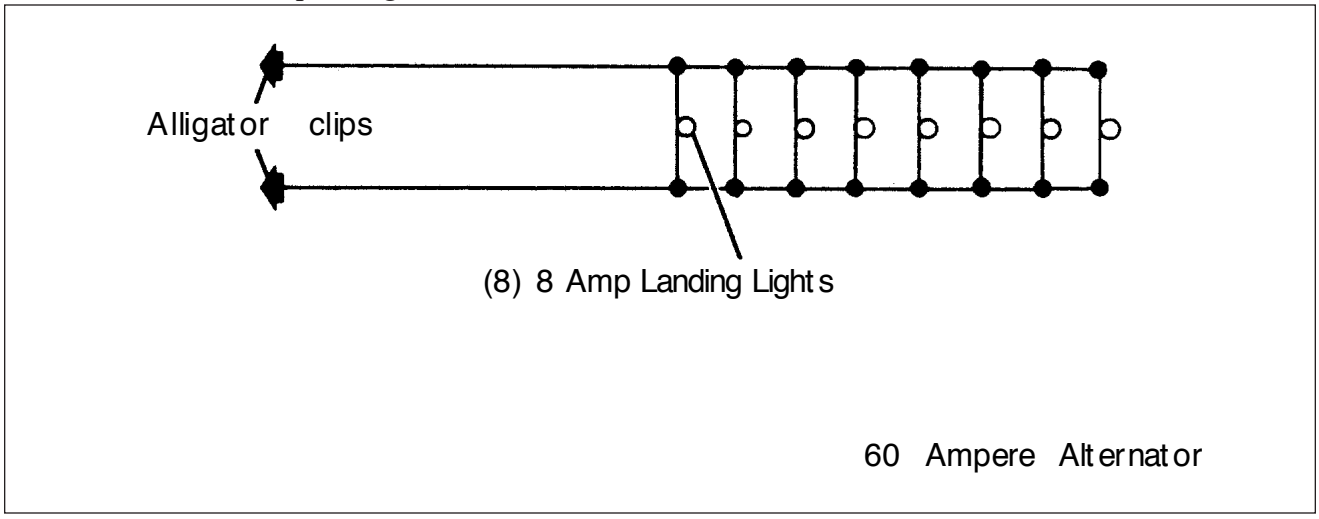

Lamp-Bank Load
Figure 4

D.C. GENERATION (cont.)

(5) Service Procedures

Since the alternator and regulator are designed for use on only one polarity system, the following pre- cautions must be observed when testing or servicing the electrical system. Failure to observe these precautions will result in serious damage to the electrical equipment.

(a) Disconnect battery before connecting or disconnecting test instruments (except voltmeter) or before removing or replacing any unit or wiring. Accidental grounding or shorting at the regulator, alternator, ammeter or accessories, will cause severe damage to units and/or wiring.

(b) Alternator must not be operated on open circuit with the rotor winding energized.

(c) Do not attempt to polarize alternator. No polarization is required. Any polarization attempt may result in damage to alternator, regulator or circuits.

(d) Grounding of alternator output terminal may damage the alternator and/or circuit and components.

(e) Reversed battery connections may damage rectifiers, wiring or other components of the charging system. Check battery polarity with a voltmeter before installing. Most aircraft are negative ground.

(f) If a booster battery or fast charger is used, its polarity must be connected correctly to prevent damage to the electrical system components.

(6) Overhaul of Alternator

Complete disassembly may not be required when repairing the alternator, . In some cases it will only be necessary to perform those operations which are required to effect the repair. However, in this section, the complete overhaul is covered step-by-step to provide detailed information on each operation. In actual service practice, use only the required operations.

(a) Disassembly of Alternator

1 Remove two Number 10-24 screws holding brush holder assembly in slip ring end head. Remove t brush and holder assembly from end head.

2 Remove safety wire from through bolts. Hold pulley with a strap wrench and remove pulley nut. Pulley must be removed with a puller. Remove fan, woodruff key and spacer from shaft.

3 Remove four through bolts and tap drive end head lightly to separate drive end head and rotor, as a unit, from stator and slip ring end head.

4 Remove nuts, lock washers, flat washers and insulators from output and auxiliary terminal studs. Note carefully the correct assembly of insulator washers and bushings. Using special tools shown in Figure 6, support the end head and press out the three negative rectifiers. End head can now be separated from stator assembly.

5 Use a hook type or impact type bearing puller, as shown in Figure 5, to remove slip ring end bearing and grease seal. Do not remove bearing unless replacement is necessary.

— NOTE —

The inner race of the slip ring end bearing is pressed onto the rotor shaft. When bearing replacement is necessary, always replace the complete bearing assembly, including the inner race.

D.C. GENERATION (cont.)

(a) Disassembly of Alternator

6 Use puller that grips on bearing retainer plate, as shown in Figure 7, to remove drive end head from rotor shaft. Do not attempt to remove by supporting end head and pressing on shaft, as this may result in distortion of end head or stripping of retainer plate screws. Remove three retainer plate screws and press bearing out of end head. (Refer to Figure 8).

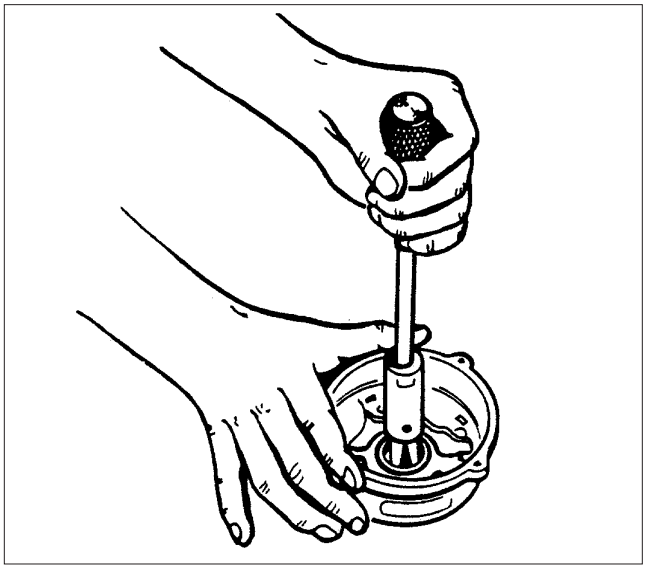

Removal of Slip Ring End Bearing
Figure 5

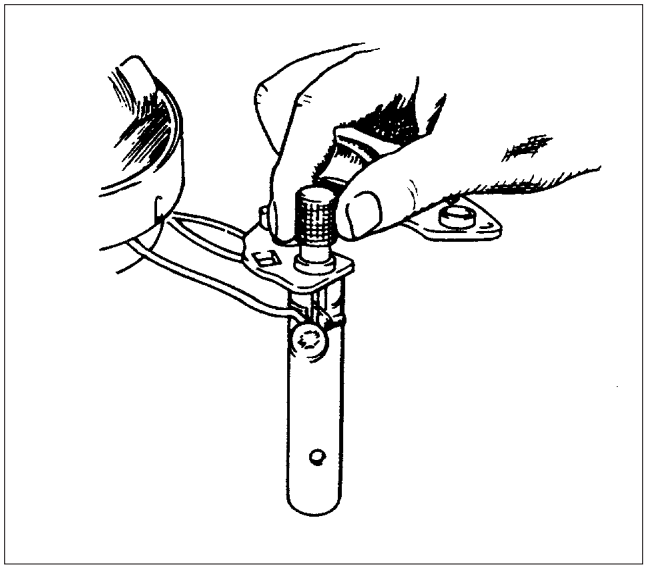

Removal of Rectifier
Figure 6

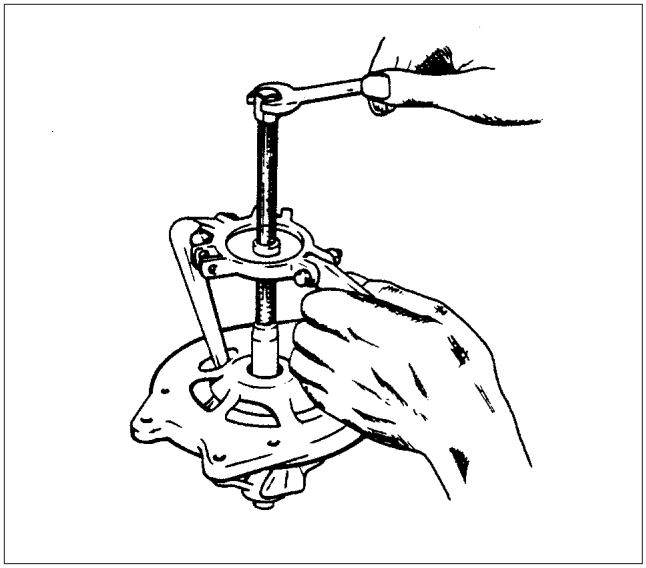

Removal of Drive End Head
Figure 7

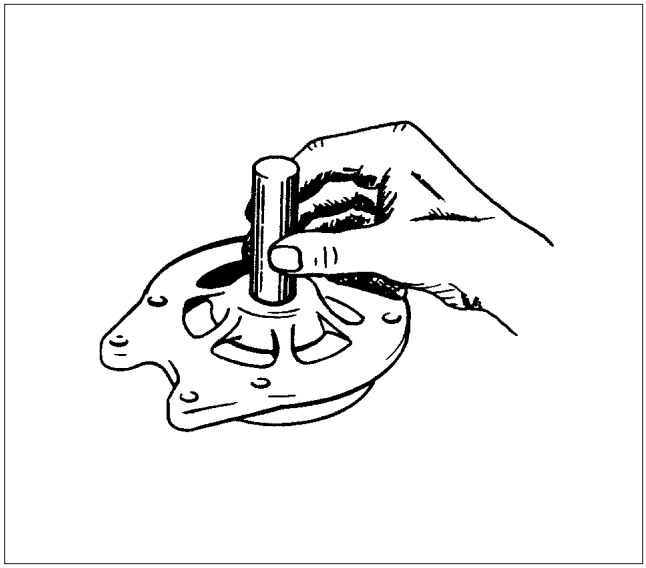

Removal of End Head Bearing
Figure 8

D.C. GENERATION (cont)

(b) Inspection and Testing of Components

After disassembly, clean and visually inspect all parts for cracks, wear, distortion, and any signs of overheating or mechanical interference.

1 Rotor: Test for grounded or shorted windings. Ground test can be made with test probes, connected in series with a 110-volt test lamp, an ohmmeter or any type of continuity tester. (Refer to Figure 9.) There must no continuity between slip rings and rotor shaft or poles. Test for shorted turns in the rotor winding by connecting a voltmeter, ammeter and rheostat, as shown in Figure 10, or use an ohmmeter. Rotor current draw and resistance are listed in the Alternator Service Test Specification paragraph. Excessive current draw or a low ohmmeter reading indicates shorted windings. No current draw or an infinite ohmmeter reading would indicate an open winding.

2 Rectifiers: A diode rectifier tester will detect and pinpoint open or shorted rectifiers without going through the operation of disconnecting the stator leads. However, if a tester is not available, test probes and a No. 57 bulb, connected in series with a 12-volt battery, can be used in the following manner. Touch one test probe to a rectifier heat sink and the other test probe to a lead from one of the rectifiers in that heat sink. Then reverse the position of the leads. The test bulb should light in one direction and not light in the other direction. If the test bulb lights in both directions, one or more of the rectifiers in that heat sink is shorted. To pinpoint the defective rectifier, the stator leads must be disconnected and the above test repeated on each rectifier. Open rectifiers can only be detected, when using the test bulb, by disconnecting the stator leads. The test bulb will fail to light in either direction if the rectifier is open.

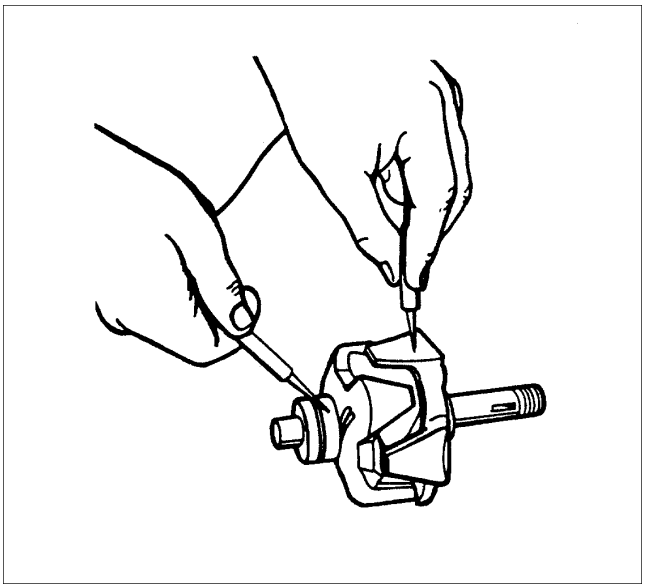

Testing Rotor for Ground
Figure 9

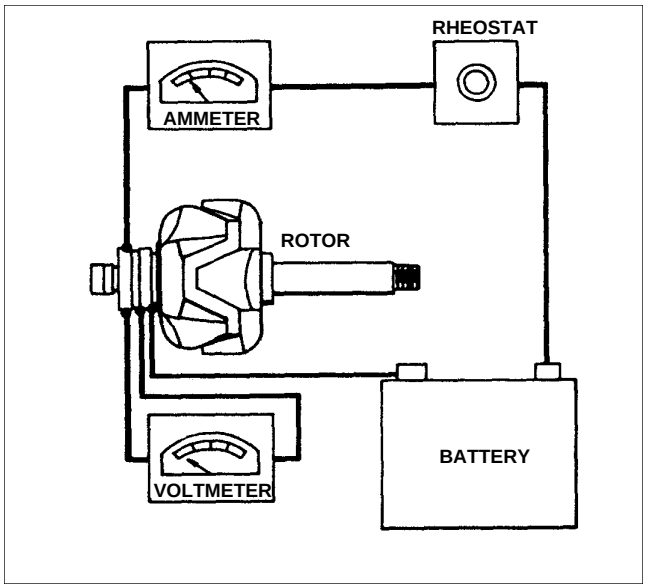

Testing Rotor for Shorts
Figure 10

D.C. GENERATION (cont.)

(b) Inspection and Testing of Components (cont.)

3 Stator: The stator can be tested for open or grounded windings with a 12-volt test bulb, described in the rectifier section, or an ohmmeter, in the following manner. Separate the stator from the slip ring end head just far enough to insert a fold of rags or blocks of wood. In other words, insulate the stator from the end head. To test for grounded windings, touch one test bulb or ohmmeter probe to the auxiliary terminal or any stator lead, and the other test bulb or ohmmeter probe to the stator frame. If the test bulb lights, or the ohmmeter indicates continuity, the stator is grounded. To test for open windings, connect one test probe to the auxiliary terminal or the stator winding center connection and touch each of the three stator leads. The test bulb must light, or the ohmmeter must show continuity. Due to the low resistance in the stator windings, shorted windings are almost impossible to locate. However, shorted stator windings will usually cause the alternator to "growl" or be noisy during operation and will usually show some signs of overheating. If all other electrical checks are normal and alternator fails to supply its rated output, the stator should be replaced to determine whether or not it is the faulty component.

4 Bearings and Seals: Whenever the alternator is overhauled, new bearings and oil or grease seals are recommended, even though the bearings and seals appear to be in good condition. A faulty seal can cause an alternator to fail within a very short period of time.

(c) Assembly of Alternator

1 Press the ball bearing into the drive end head using a flat block approximately two inch square so that the pressure is exerted on the outer race of the bearing. Install the retainer plate. With the snap ring and retainer cup in place on the rotor shaft, use a tool that fits over the shaft and against the inner bearing race, and press until the inner bearing race is against the snap ring retainer cup. (Refer to Figure 11.)

— CAUTION —

Use an arbor press, do not hammer. Connect stator leads to the rectifiers. When soldering these connections, use pliers as a heat dam on lead between solder joint and rectifier. Too much heat will damage rectifiers.

2 Carefully install the rectifiers in the slip ring end head or rectifier mounting plate by supporting the unit and using the special tools illustrated in Figure 12.

3 Reassemble the rectifier mounting plate studs and insulators, making sure they are in the correct order. (Refer to Figure 13.)

4 After the slip ring end head is completely assembled, the stator and rectifier leads must be secured to the rectifier mounting plate with epoxy. Make sure the stator leads are positioned so that they do not interfere with the rotor.

D.C. GENERATION (cont.)

(c) Assembly of Alternator (cont.)

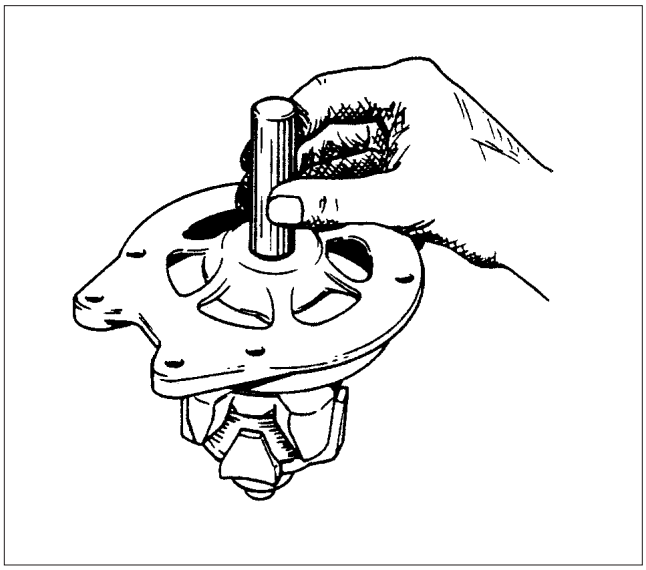

Installation of Bearing
Figure 11

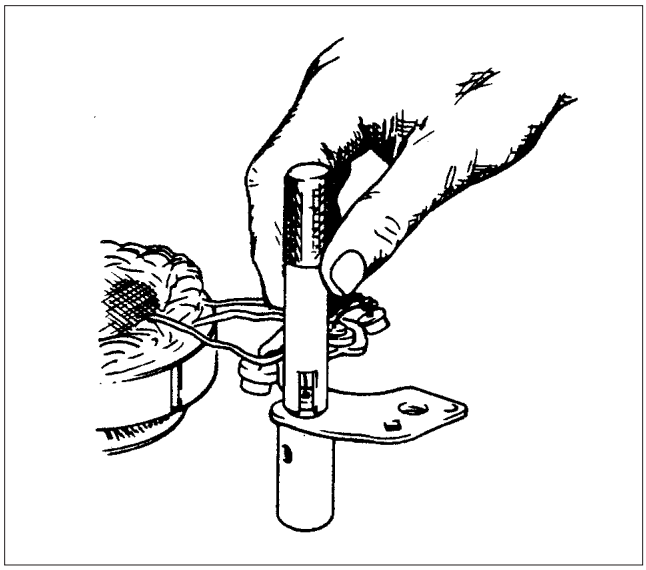

Installation of Rectifier
Figure 12

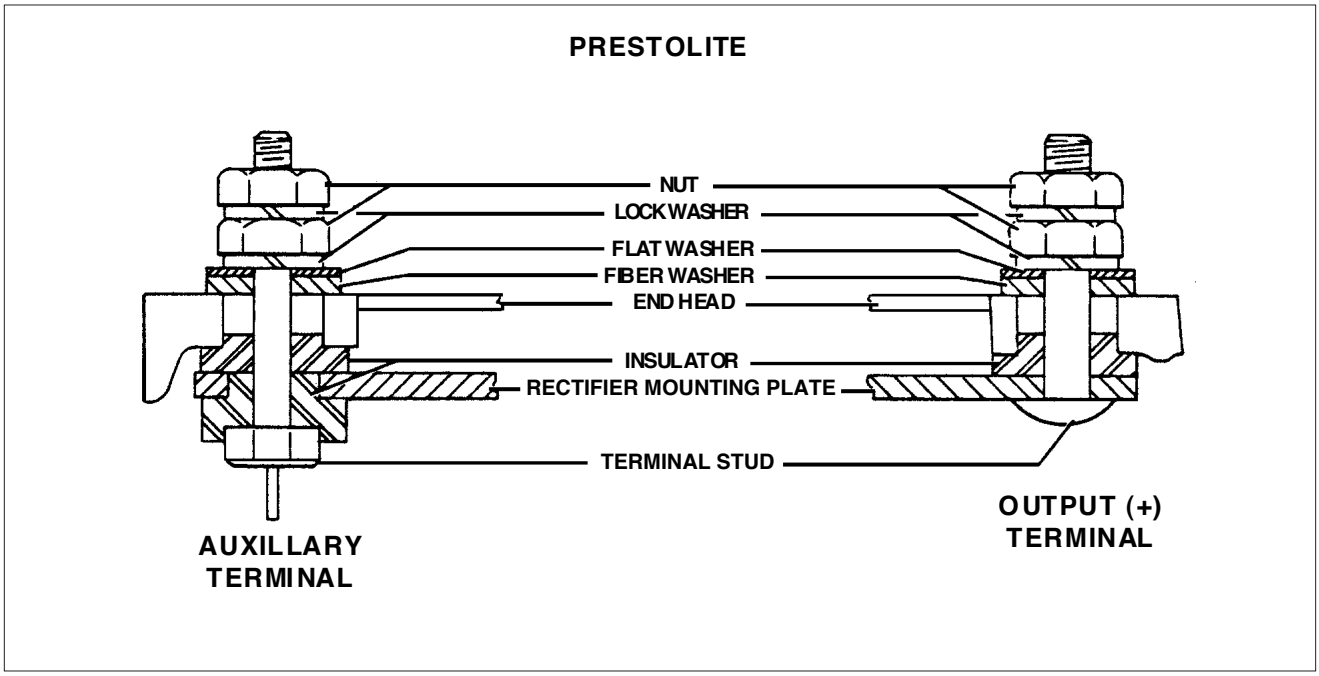

Prestolite Terminal Assembly
Figure 13

D.C. GENERATION (cont.)

(c) Assembly of Alternator (cont.)

5 Install the slip ring end bearing and oil seal. Make sure the lip of the oil seal is toward the bearing. Stake the seal in place. Correct assembly of bearing, seal, inner race and spacer as shown in Figure 14.

6 Assemble the alternator and install the through bolts. Spin the rotor to make sure there is no mechanical interference. Torque the through bolts to 30 to 35 inch-pounds. Safety wire should be installed after the unit has been bench tested for output. Install spacer, woodruff key, fan, pulley, lock washer and nut. Torque the nut to 35 foot-pounds, using a strap wrench to hold the pulley.

7 Install the brush and holder assembly and retaining screws. Spin the rotor and check for interference between the brush holder and rotor. Check between the field terminal and ground with an ohmmeter. The ohmmeter must indicate the amount of rotor resistance listed. (Refer to Chart 2403, Alternator Specifications.)

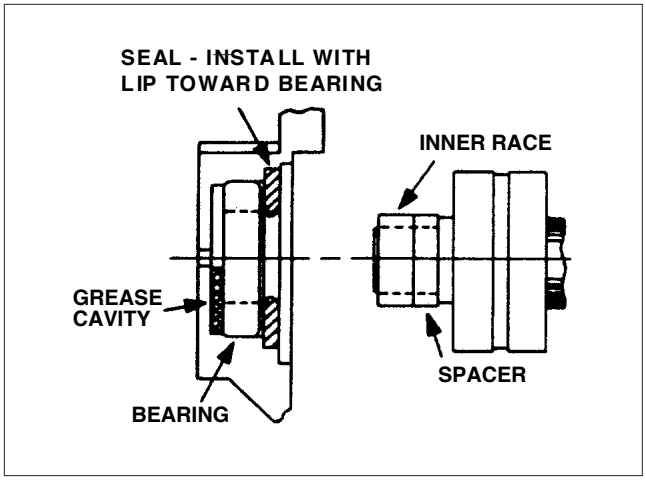

Slip Ring End Bearing Assembly
Figure 14

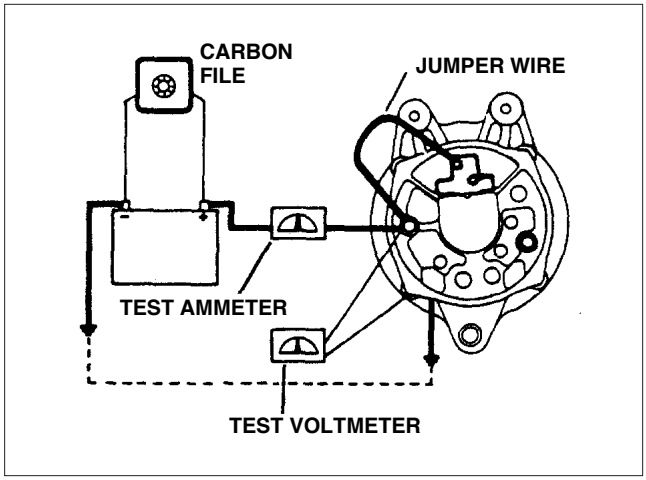

Testing Alternator
Figure 15

(7) Testing Alternator

(a) Wiring connections for bench testing the alternator are shown in Figure 15. Refer to the Chart 2, Alternator Specification, for output test figures. Adjust carbon pile if necessary, to obtain specified voltage.

(b) After bench testing the alternator, install the safety wire and install the alternator on the engine.

—NOTE—

Always refer to the wiring diagram and Figure 15 when testing or installing the alternator.

D.C. GENERATION (cont.)

(7) Testing Alternator (cont.)

CHART 2
Alternator Specifications - Prestolite ALY 6422

Voltage	12 volts	
Rated Output	60 amperes	
Ground Polarity	Negative	
Rotation	Bi-Directional	
Rotor:		
Current Draw	2.4 to 4.0 amps @ 12.0 volts	
Resistance	3.0 to 5.0 ohms	
Output Test	Alternator rpm	
	2000 min.	4000 min.
Volts	14.0	14.0
Amperes Output	13.0	47.0

(8) Checking Alternator Belt Tension
Adjust alternator belt tension at the time of installation. Check tension again after 25 hours of operation and each l00 hours thereafter.

There are two methods of checking alternator belt tension;

(a) Slip Torque Method: This method consists of installing a torque wrench on the pulley retaining nut and measuring the amount of torque required to make the pulley slip.
1 Apply a torque wrench to nut that attaches pulley to alternator and turn in a clockwise direction. Observe torque shown on wrench at the instant pulley slips.
2 Check the torque indicated in Step A with torque specified in Chart 3. Adjust belt tension accordingly.
3 When belt tension is correct, torque alternator pivot bolts 225-255 inch-pounds.

(b) Deflection Method: This method consists of measuring the amount of deflection caused by a predetermined amount of tension.
1 Attach hook of a small spring-scale to belt at the approximate mid-point between rear gear support and alternator.
2 Pull on scale until a reading of 14 pounds is obtained. (10 pounds for used belts.)
3 Measure distance belt has moved with the 10 or 14 pound load applied. Distance (deflection) should be 5/16 inch. If less than 5/16 inch, belt is too tight.
4 When belt tension is correct, torque alternator pivot bolts 225-255 inch-pounds.

D.C. GENERATION (cont.)

(8) Checking Alternator Belt Tension (cont.)

Chart 3
Prestolite Alternator Belt Tension

Width of Belt	Condition	Torque indicated at alternator pulley
3/8 inch	New	11 to 13 ft-lbs
3/8 inch	Used	7 to 9 ft-lbs
1/2 inch	New	13 to 15 ft-lbs
1/2 inch	Used	9 to 11 ft-lbs

—NOTE—

Higher tension specified for new belts compensates for initial stretch that takes place as soon as it is operated. Do not apply higher tensions to previously used belts

C 90 Amp Ford Alternator System (Refer to Figure 16.)

(1) Description

The principal components of the alternator are the front housing, fan and pulley, rear housing and terminal identification, stator core and coil assembly, rotor core and coil, brushes and holder assembly and rectifier assembly.

(a) The front housing is a die-cast aluminum part which meets design requirements for a lightweight, non-magnetic material. This casting incorporates the bosses used to attach the assembly to its mounting bracket. It also provides the supporting surface for the rotor shaft front bearing and vendor identification data stamped into the front housing.
The fan and pulley are attached to the rotor shaft with a nut and lock-washer. The forward end of the shaft is threaded to accept the nut.

(b) The rear housing is also a die-cast aluminum part which supports the rotor shaft rear bearing and provides mounting bosses for the rectifier assembly. The housing contains the various electrical connections and openings for cooling airflow. (Refer to Figure 17 for Terminal identification.)

(c) The stator core and coil assembly consists of a number of steel stampings riveted together to form the stator core which contains 36 equally spaced vertical slots to accommodate the stator coil windings. (Refer to Figure 18.)

(d) The rotor core and coil assembly consists of the rotor shaft, two slip rings, two rotor halves and the coil assembly. The shaft is supported at each end by bearings. The front bearing (ball-type) is a slip fit on the shaft and is retained in the front housing with a retainer. The rear bearing (needle-type) is pressed into the rear housing. The slip rings, core and coil assembly are press-fitted to the shaft with a rotor half enveloping each end of the coil.
The rotor core and coil assembly turns inside the stator core and coil assembly with a very narrow air gap between the two assemblies, thus developing maximum magneto induction.

D.C. GENERATION (cont.)

(1) Description (cont.)

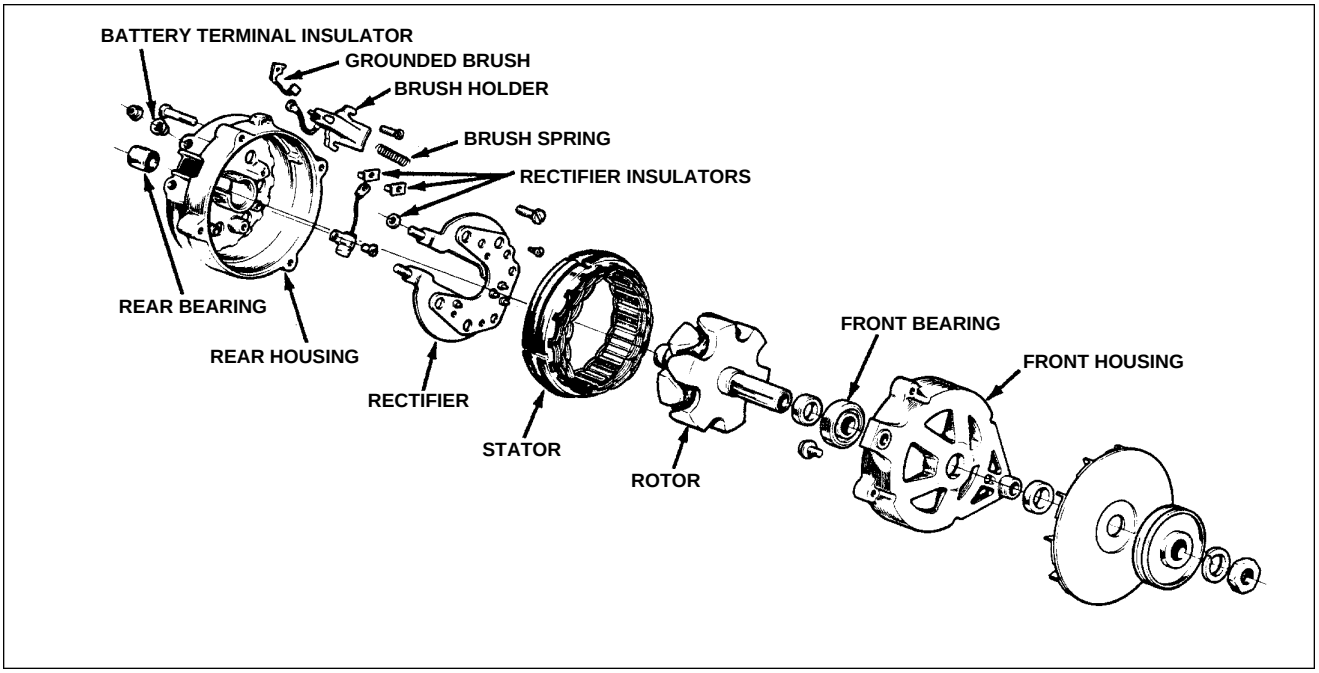

Exploded View of Ford Alternator
Figure 16

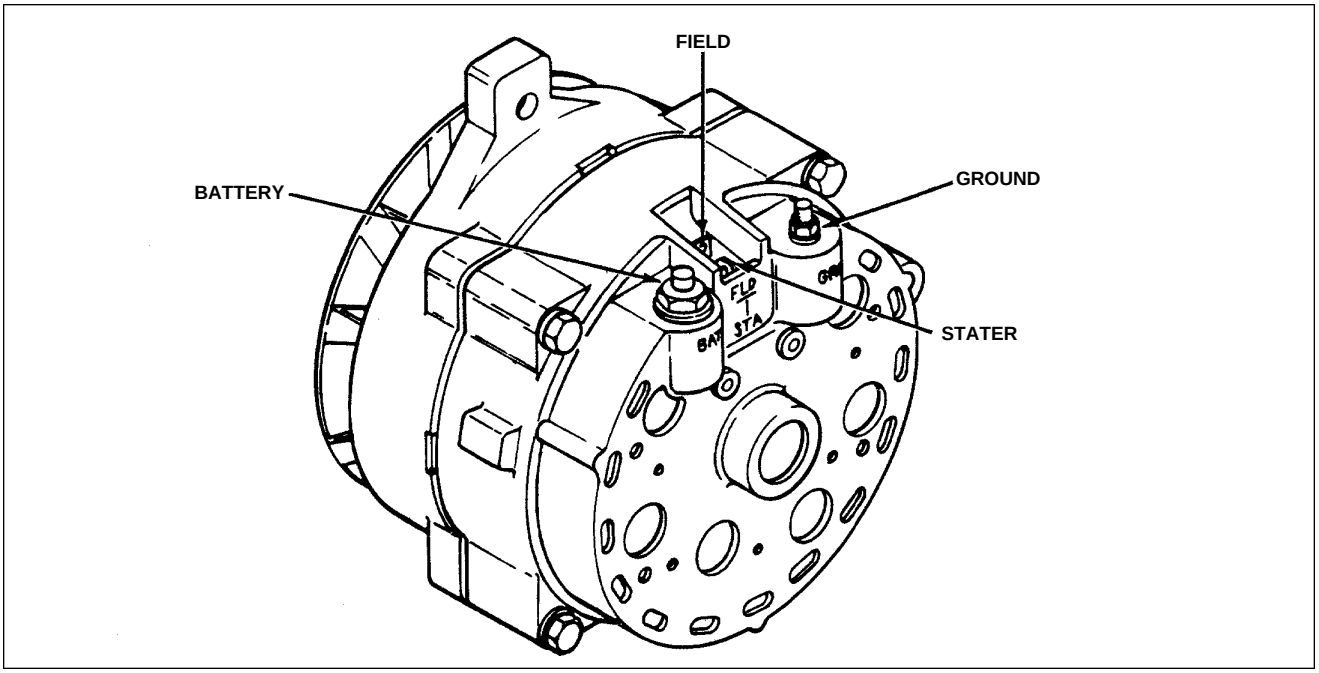

Rear View and Terminal Identification
Figure 17

D.C. GENERATION (cont.)

(1) Description (cont.)

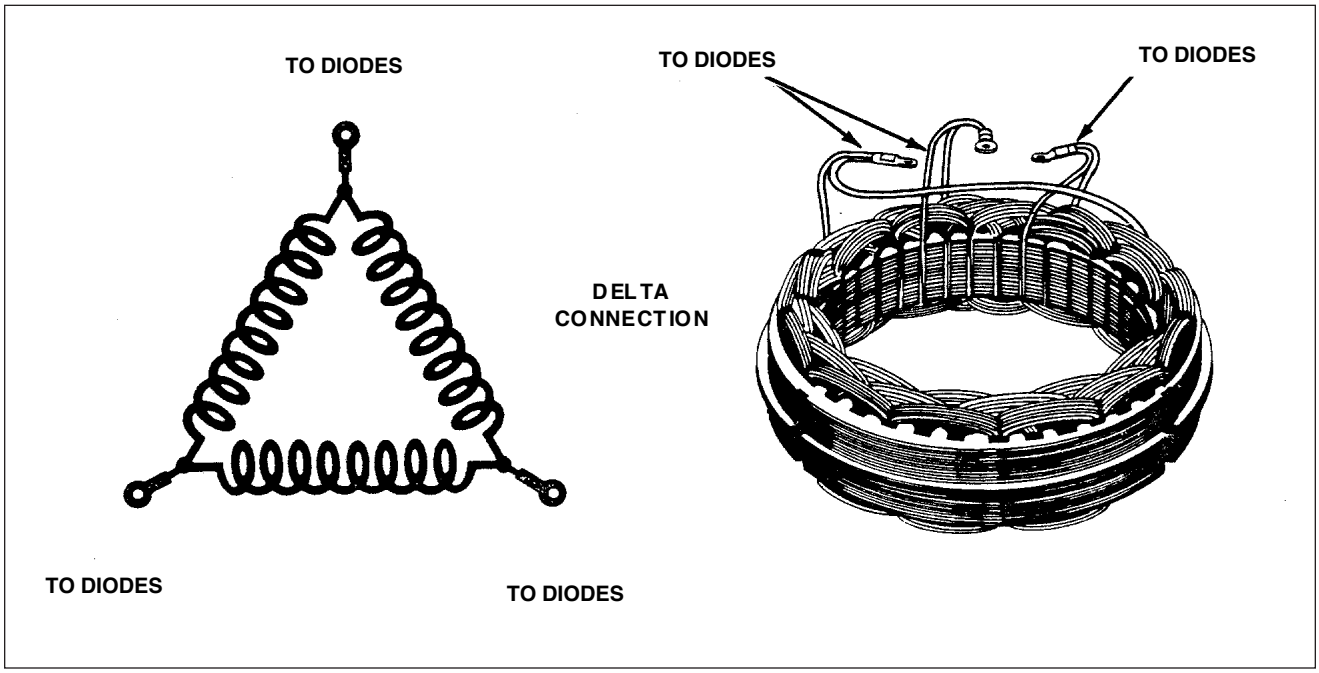

Stator Core and Windings
Figure 18

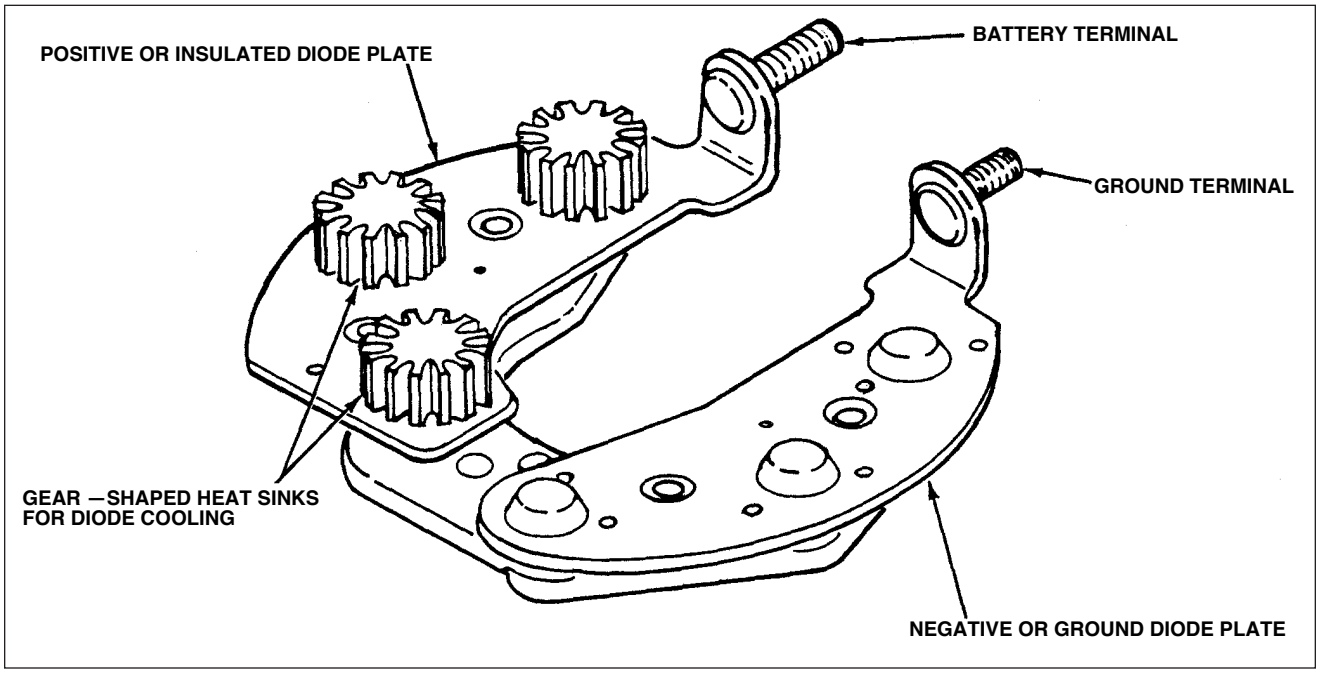

Rectifier Assembly
Figure 19

D.C. GENERATION (cont.)

(1) Description (cont.)

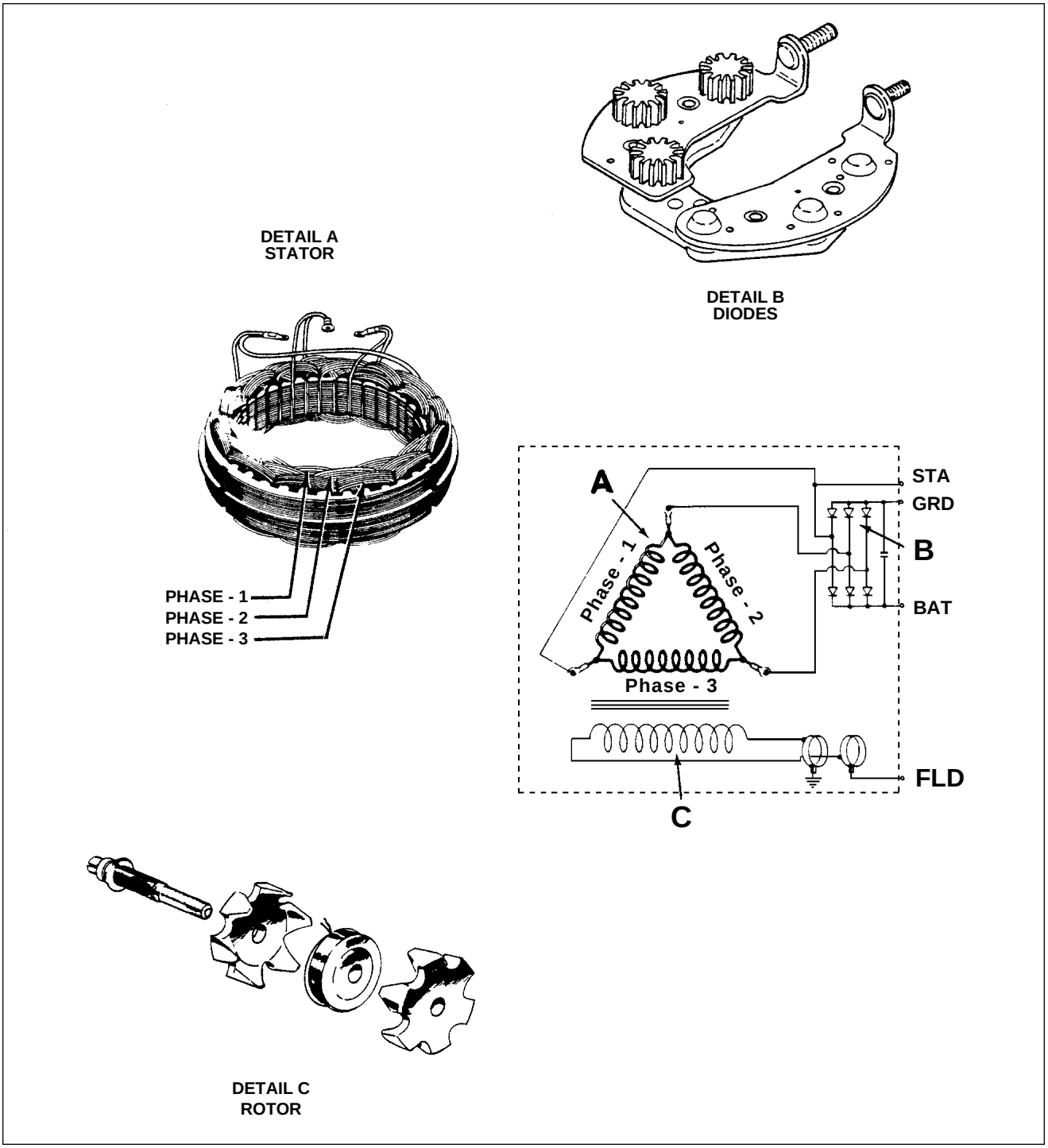

Internal Relationships of Alternator Components
Figure 20

D.C. GENERATION (cont.)

(1) Description (cont.)

(e) The brush and holder assembly is installed in a cavity inside the rear housing. The brushes ride the surfaces of the slip rings on the rotor shaft under spring pressure and transmit field current through their circuit to ground. One brush or field terminal is, therefore, insulated from the housing.

(f) The rectifier assembly is located between the stator and the inside surface of the rear housing. Attachment to the housing is made by means of mounting studs that protrude from the positive and negative diode plates (heat sinks). The positive plate is insulated from the housing, and the negative plate is grounded to the housing through the studs. The rectifier assembly has a printed circuit board spaced away from the heat sinks. (Refer to Figure 19.)

The stator winding leads are soldered to integral terminals on the back of the circuit board. The stator phase top is attached to the insulated stator terminal. The heat sinks are attached to the circuit board with insulated spacers and roll pins maintaining the necessary separation between the two assemblies. The diodes themselves are exposed. The rectifier assembly has three diode plates connected to an AC potential. Each of the three plates is connected to one of the three stator leads. Two steel conductor plates or “bus bars”, one positive and the other negative, circle the diodes beginning at the “BAT” and “GND” terminal studs. The bus bars act as termination points for collecting the DC current from the terminal wire of each diode. One positive and one negative diode is soldered to each of three stamped aluminum plates to form the plate and diode assemblies. The aluminum plates serve as heat sinks to cool the diodes by providing increased surface area to the air flow through vent slots in the rear housing to the fan at the front of the alternator.

One plate and diode assembly is connected to each of the three leads to form the full wave bridge rectifier. Diode terminal wires are connected to the bus bars by means of a flexible connector wire. One diode is connected to the positive bus bar, and the other diode, on each plate, is connected to the grounded or negative bus bar. (Refer to Figure 20.)

(2) Precautions

As a preface to testing the charging system, it cannot be over-emphasized how important it is to observe the precautions listed. Considerable time and expense can be saved by following these simple rules.

(a) Always disconnect the battery ground cable before disconnecting wiring or components of system.

(b) Avoid contacting alternator output terminal (BAT) as it is directly connected to the battery bus voltage anytime battery cables are connected and “BAT” portion of master switch is ON.

(c) Never connect the battery ground cable until all system wiring connections and components are complete.

(d) When adjusting belt tension, always apply force near pulley of the alternator to avoid damage to stator and rectifier, or use a 1 1/8” O.E. Wrench on the adjustment lug of the alternator case casting.

(e) Never attempt to polarize the alternator. Polarizing is not applicable to alternator and could damage the regulator.

(f) Observe polarity when installing a battery in aircraft. Reverse polarity will destroy the diodes in alternator.

(g) Always connect a booster battery in parallel, negative to negative, positive to positive.

D.C. GENERATION (cont.)

(2) Precautions (cont.)
(h) Before disconnecting a booster battery, reduce engine speed to idle, operate taxi light. This will prevent voltage surge that could destroy small light bulbs.
(i) Disconnect the battery ground cable before connecting a charger to the battery.

(3) On Aircraft Check of Alternator System
(a) Visual Inspection
Prior to testing, a visual inspection of components of charging system should be performed. What appears to be an authentic charging system problem, can in some instances be traced to some of the discrepancies outlined here that are relatively simple to correct.
1 Proper belt tension. If alternator pulley wheel can be slipped on belt by hand the belt is too loose or glazed. Replace or tighten belt per specification.
2 Specific gravity of battery is 1.275. Battery is +fully charged .
3 Clean and tighten battery posts and cable clamps.
4 Clean and tighten wiring connection at alternator.
5 Clean and tighten wiring connections at regulator.

(4) Ammeter Validity Test
With engine off, place “BAT” section of master switch in the ON position. Switch landing light switch ON. Ammeter should show discharge. If ammeter needle does not move:
(a) Check wiring connections at ammeter are tight and clean, or;
(b) Ammeter is defective. Replace ammeter.

(5) Battery Supply Voltage Test
If aircraft ammeter shows discharge with engine running, perform the following test before checking alternator voltage output. The test will verify that battery voltage is being supplied to regulator. Alternator cannot provide output unless field voltage is supplied.
(a) Disconnect connector at voltage regulator.
(b) Connect voltmeter positive lead to pin 1 of disconnected plug (B lead of regulator) and negative lead to aircraft structure.
(c) Turn Master Switch ON. (Bat and Alt). Voltmeter should read battery voltage. If voltage is not present:
1 Check continuity of wiring harness from regulator plug to alternator circuit breaker.
2 Ensure that alternator regulator circuit breaker is closed and not defective.

(6) Voltage Output No-Load Test
This test as well as the following voltage output load test, should be performed whenever an “overcharging” or “undercharging” condition is suspected.
Visual check as previously outlined, should be made and engine should be at normal operating temperature .
(a) Connect voltmeter positive lead to positive battery terminal and negative lead to negative battery terminal. Record Reading.
(b) Assure that all switches and lights are off - no load condition.
(c) Start engine and slowly increase speed to approximately 1500 rpm.

D.C. GENERATION (cont.)

(6) Voltage Output No-Load Test (cont.)
   (d) Check voltmeter reading. The voltage should increase, but not more than 4 volts above voltage recorded in step 1.
   (e) If the voltage does not increase, or if the increase is within the 4 volt limit, proceed to Voltage Output Load Test.
   (f) If voltage increase exceeds 4 volts, stop engine and isolate overvoltage problem as follows:
      1 Disconnect regulator plug from regulator and repeat the test with plug disconnected.
      2 Voltmeter should show no increase in voltage as excitation voltage to alternator is cut-off Replace regulator.
      3 If voltage increases with the regulator plug disconnected, excitation voltage is being supplied to alternator field by short circuitry. Isolate and check continuity of wiring harness, repair or replace.

(7) Voltage Output Load Test
This test is to determine if there is an undercharge condition.
   (a) Connect regulator plug.
   (b) Connect voltmeter to negative and positive post of battery. Record voltage reading.
   (c) Turn off all accessory switches. Open circuit breakers where switches do not control circuits.
   (d) Start the engine. Apply a load by turning on the landing light.
   (e) Slowly increase engine speed to 1500 rpm.
   (f) Voltage reading should increase a minimum of 0.5 volt above previous reading.
   (g) Turn off landing light and shut down engine.
   (h) If voltage fails to increase a minimum of 0.5 volt, position alternator section of master switch to OFF. An “under voltage” condition exists. Proceed as follows to isolate problem.
      1 Disconnect regulator plug and install a jumper from positive terminal of battery to pin 2 (F pin of regulator plug).

— CAUTION —

Do not operate engine more than 2 minutes with jumper installed. Damage to components of electrical system could occur.

      2 Start engine. Turn alternator switch ON. Apply electrical load by turning landing light ON. Slowly increase engine speed to determine that voltage obtained in step (b) increases. Stop rpm increase when voltage measures 0 volts.
      3 Voltage reading at battery should increase above previous reading a minimum of 0.5 .
      4 Turn landing light OFF Turn alternator switch OFF. Shut down engine. If the increase in voltage reading is still less than 0.5 volt, the problem is in either the wiring harness or alternator.
      5 To isolate the wiring harness, remove jumper end from the voltage regulator plug and connect it to the “FLD’’ pin of the alternator (plug removed).

D.C. GENERATION (cont.)

(7) Voltage Output Load Test (cont.)

6 Leave alternator regulator plug disconnected.

7 Start engine. Turn alternator switch ON. Apply electrical load by turning taxi and landing lights ON. Slowly increase engine speed to determine that voltage of step (b) increases. Stop rpm increase when voltage measures .0 volts. Observe 2 minute operation caution.

a If the voltage increase is now a minimum 0.5 volt, fault is wiring harness. Repair or replace harness.

b If the voltage increase is still below 0.5 volt, fault is in alternator. Remove alternator from aircraft for bench test.

(8) Alternator Bench Test Procedures

The only equipment required to bench check the alternator is an ohmmeter . Ohmmeter should be zeroed when each resistance setting is selected. Zeroing is accomplished by touching ohmmeter probes together and adjusting zero knob to align meter on full scale reading.

(a) Rectifier Ground and *Positive* Diode Test (Refer to Figure 21)

— CAUTION —

DO NOT use digital ohmmeter for this test; it will give false indications.

1 Set the ohmmeter selector switch to resistance scale 10 and zero the meter.

2 Attach one ohmmeter lead to "BAT'' terminal and the other to the "STA'' terminal.A reading of 60 ohms should be obtained. Reverse leads. An infinite (no needle movement) should be obtained.

3 A reading of 60 ohms or less in ***both*** directions indicates:

a A defective positive diode.

b A grounded positive diode plate.

c A grounded alternator "BAT'' terminal.

4 Infinite reading (no needle movement) in ***both*** directions indicates an open "STA'' (Stator) terminal connection.

(b) Stator Ground and *Negative* Diode Test (Refer to Figure 22)

— CAUTION —

DO NOT use digital ohmmeter for this test; it will give false indications.

1. Set the ohmmeter selector switch on resistance scale 10 and zero meter.

2. Connect one lead to the "STA'' terminal and the other lead to the "GRD'' terminal. A reading of approximately 60 ohms should be obtained. Reverse leads and check in opposite direction. An infinite reading (no needle movement) should be obtained.

D.C. GENERATION (cont.)

(8) Alternator Bench Test Procedures (cont.)

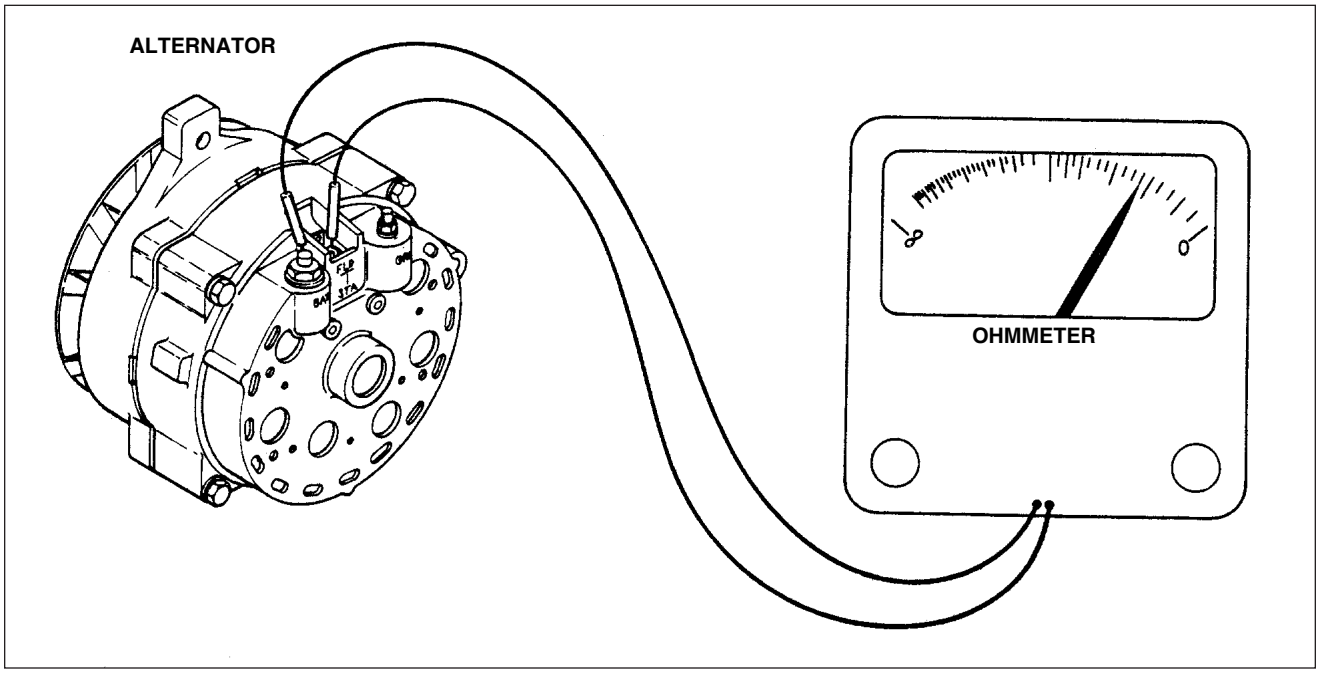

Rectifier Ground and Positive Diode Test
Figure 21

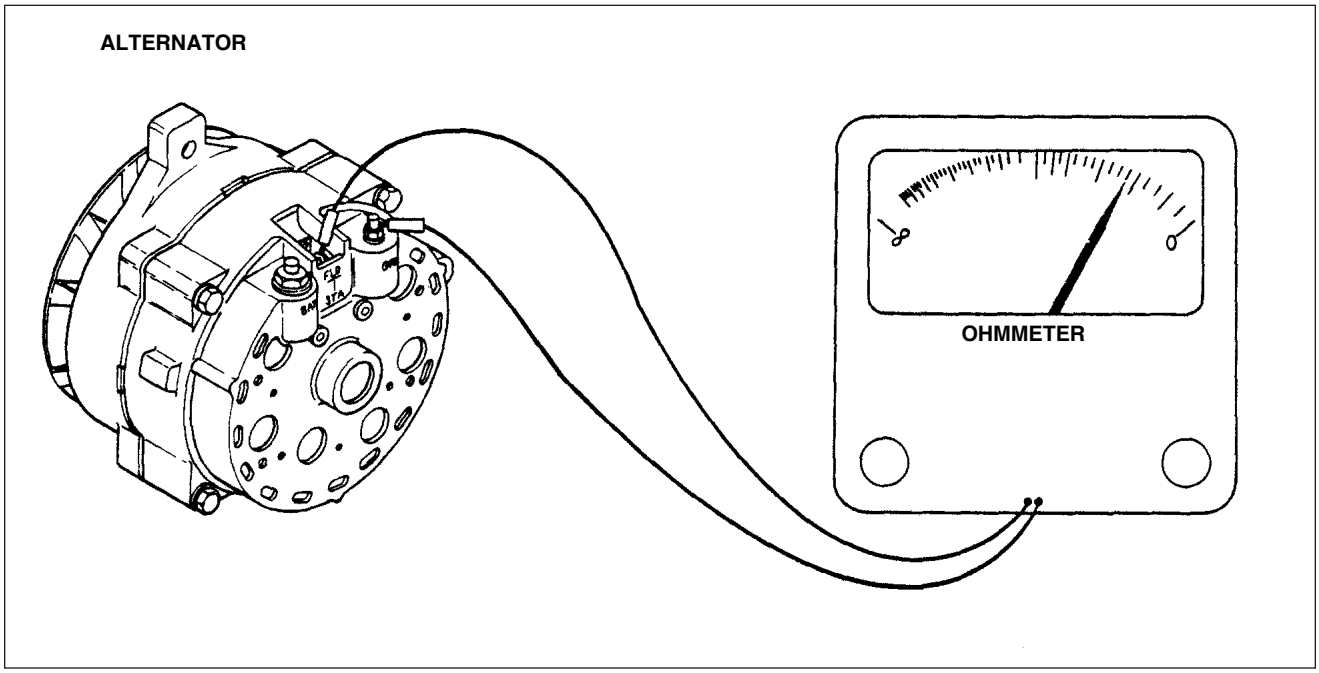

Stator Ground and Negative Diode Test
Figure 22

D.C. GENERATION (cont.)

(b) Stator Ground and *Negative* Diode Test (Refer to Figure 22) (cont.)

3 A reading of 60 ohms or less in ***both*** directions indicates:

a A defective negative diode.

b A grounded positive diode plate.

c A grounded alternator "BAT'' terminal.

d A grounded "STA'' terminal.

e A grounded stator winding (laminations grounded or windings grounded to front or rear housing).

4 Infinite readings (no needle movement) in ***both*** directions indicates an open "STA'' (Stator) terminal connection.

(c) Field Circuit Open or Ground Test (Refer to Figure 23)

1 Set ohmmeter selector switch to resistance scale 1 and zero meter.

2 Connect one lead to the"FLD'' terminal and the other lead to the "GRD'' terminal.

3 Spin alternator pulley and note ohmmeter reading. Meter should read between 4 and 200 ohms and fluctuate while rotor is turning.

4 A reading lower than 4 ohms indicates:

a A grounded positive brush.

b A grounded field terminal.

c A defective rotor.

5 A reading higher than 200 ohms indicates:

a Worn out or hung brushes.

b An open brush lead.

c A defective rotor.

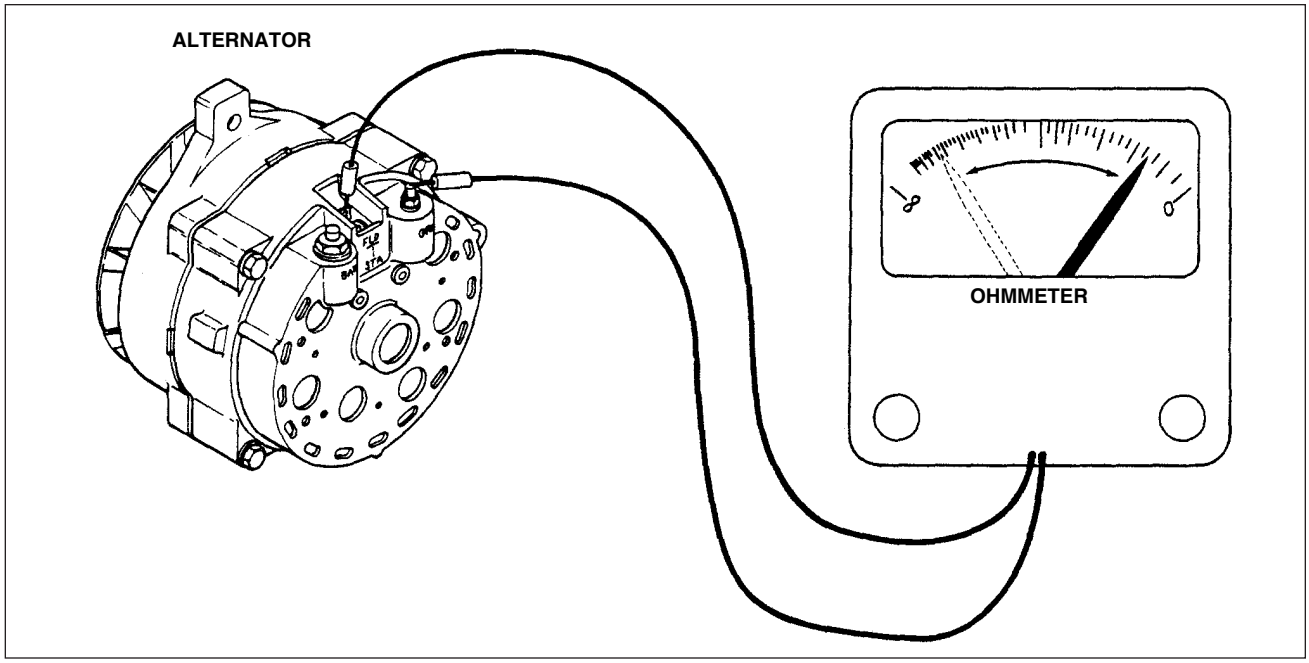

Field Circuit Open or Ground Test
Figure 23

D.C. GENERATION (cont.)

(9) Overhaul of Alternator

(a) Disassembly

1 Scribe a mark across stator and front and rear housings to facilitate alignment during assembly. (Refer to Figure 24.)

2 Separate front housing and rotor from rear housing by removing four thru bolts between housings. Remove rear housing.

3 Remove retainer nuts and insulators from the “BAT’’ and “GRD’’ terminals.

4 It is not necessary to disassemble the complete rear housing to replace the brush assembly only. Unsolder the stator lead, remove two screws securing the brush holder assembly. (Refer to Figure 25.) (Refer to the Assembly Section for installation procedure.)

5 Remove 4 retainer bolts from rectifier assembly, 2 retainer bolts from brush assembly,and 1 screw from radio suppression capacitor lead. Remove stator, rectifier assembly and brush assembly from rear housing.

6 If replacing the rear shaft bearing, support housing on the inner bearing boss and press bearing from housing.

7 If the rectifier is to be replaced, or, if the stator and diodes are to be bench checked, separate rectifier from stator by unsoldering terminal connections of stator windings and rectifier assembly. (Use 100 Watt soldering iron to prevent excessive heat buildup.)

8 Unsolder stator terminal from rectifier.

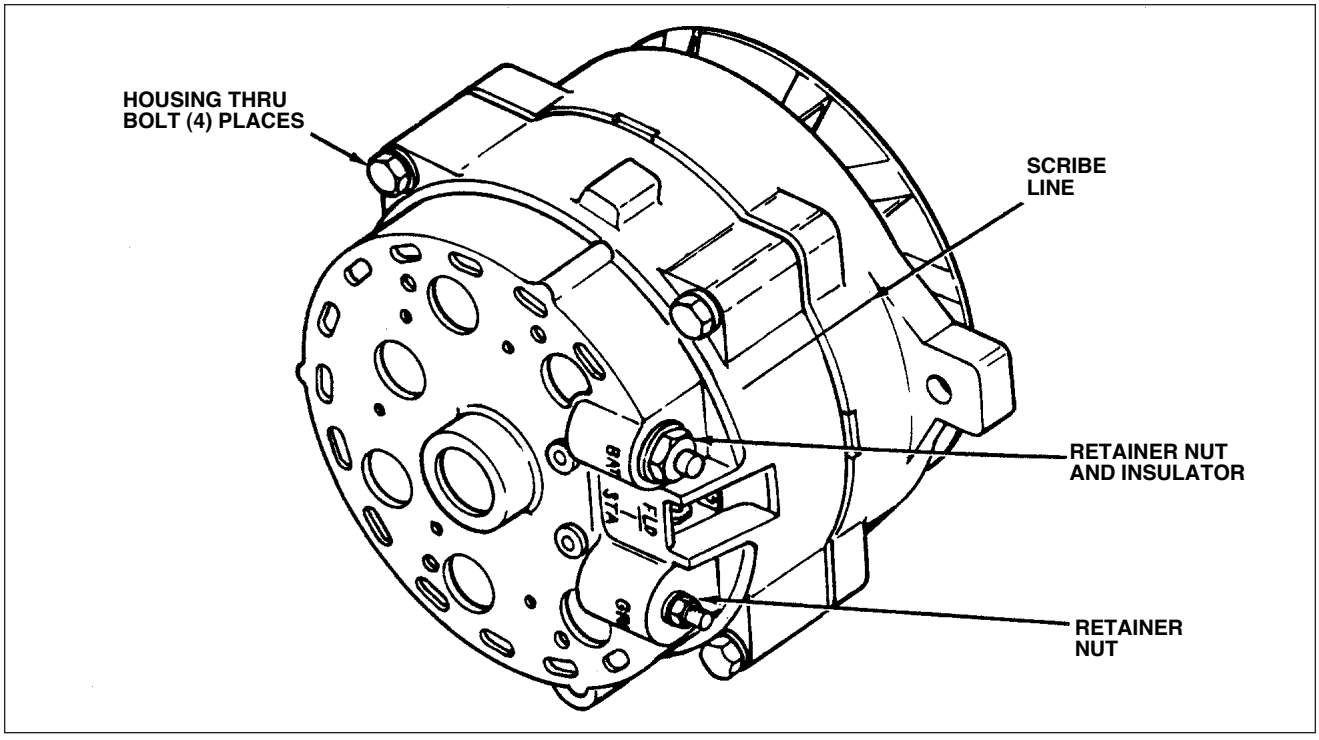

Alternator Housing Disassembly
Figure 24

D.C. GENERATION (cont.)

(a) Disassembly (cont.)

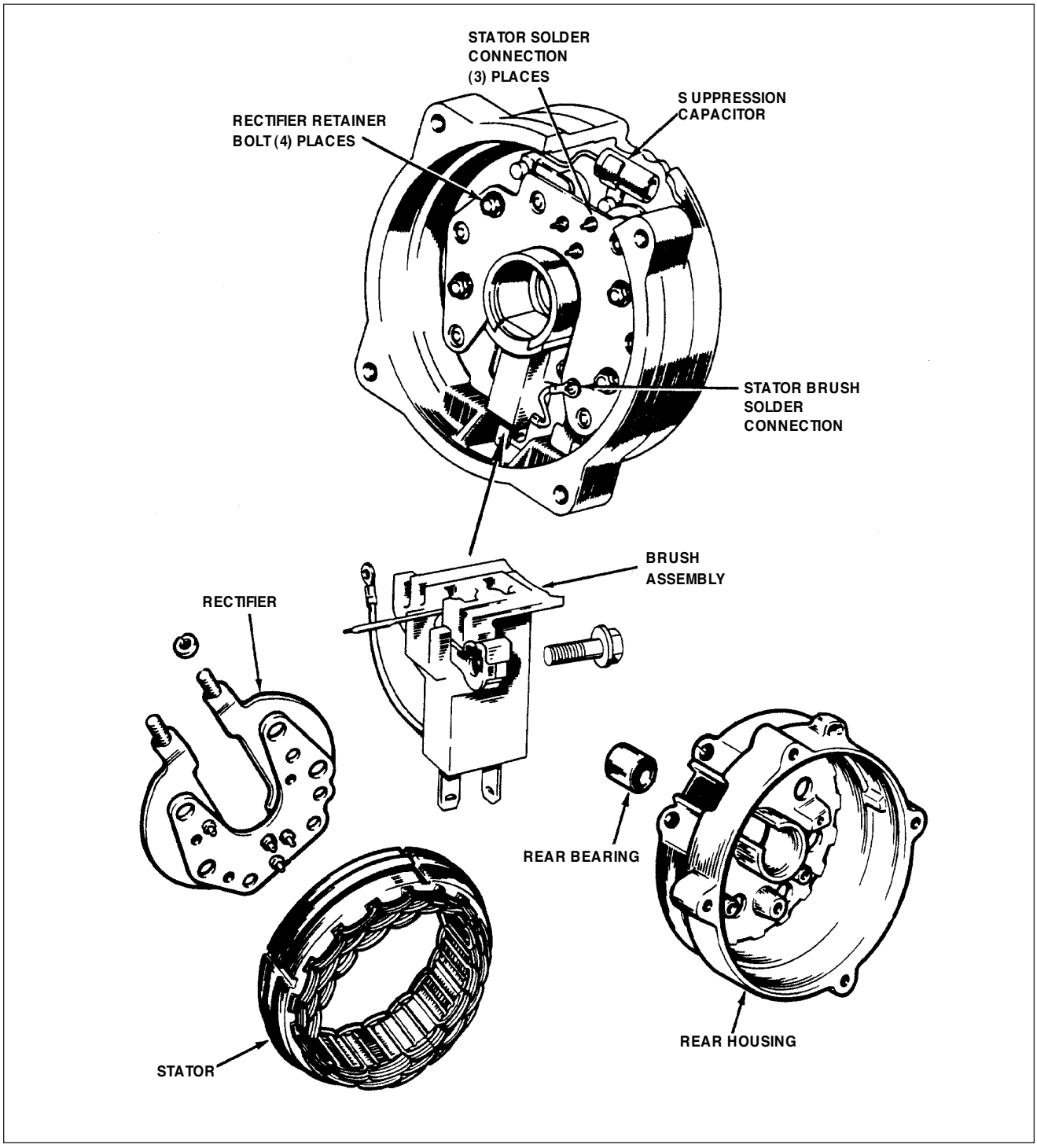

Rear Housing Components
Figure 25

D.C. GENERATION (cont.)

(9) Overhaul of Alternator (cont.)

(a) Disassembly (cont.)

9 Separate rotor, fan and pulley from the front housing by removing hex nut. A special tool, similar to that depicted in Figure 24-26, is required to remove nut. Remove pulley, fan and rotor.

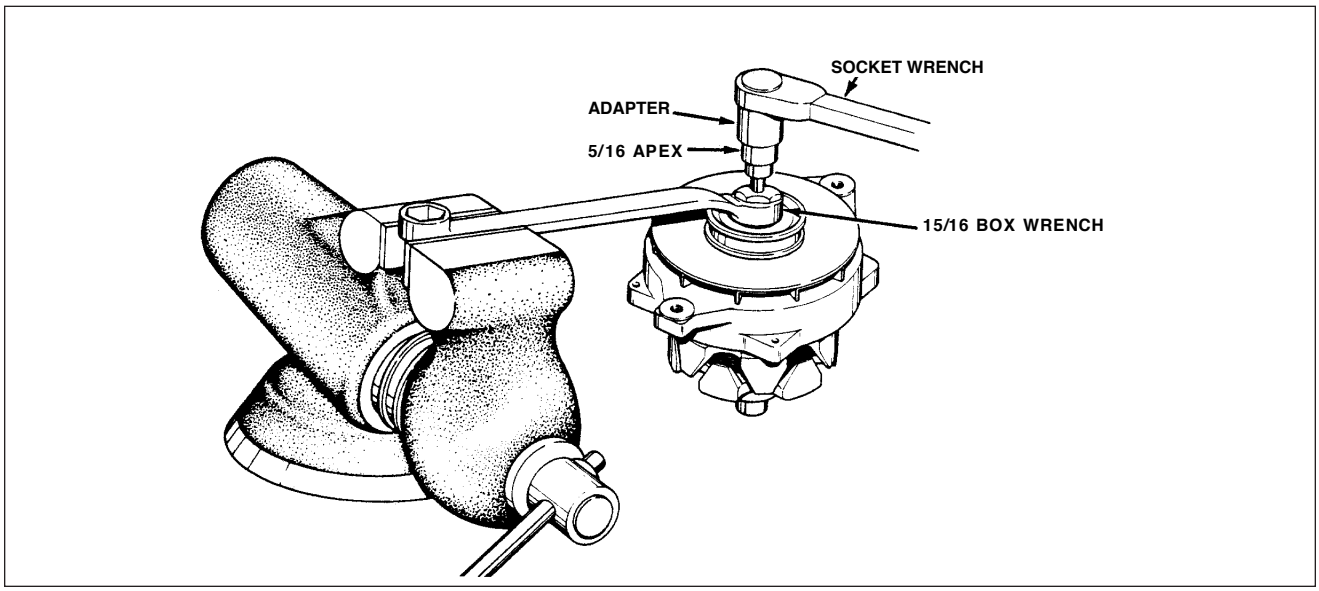

Front Housing Disassembly
Figure 26

10 Remove front bearing from housing by removing bearing retainer screws. The bearing is normally a slip-fit. If stuck, support housing and press bearing from the housing.

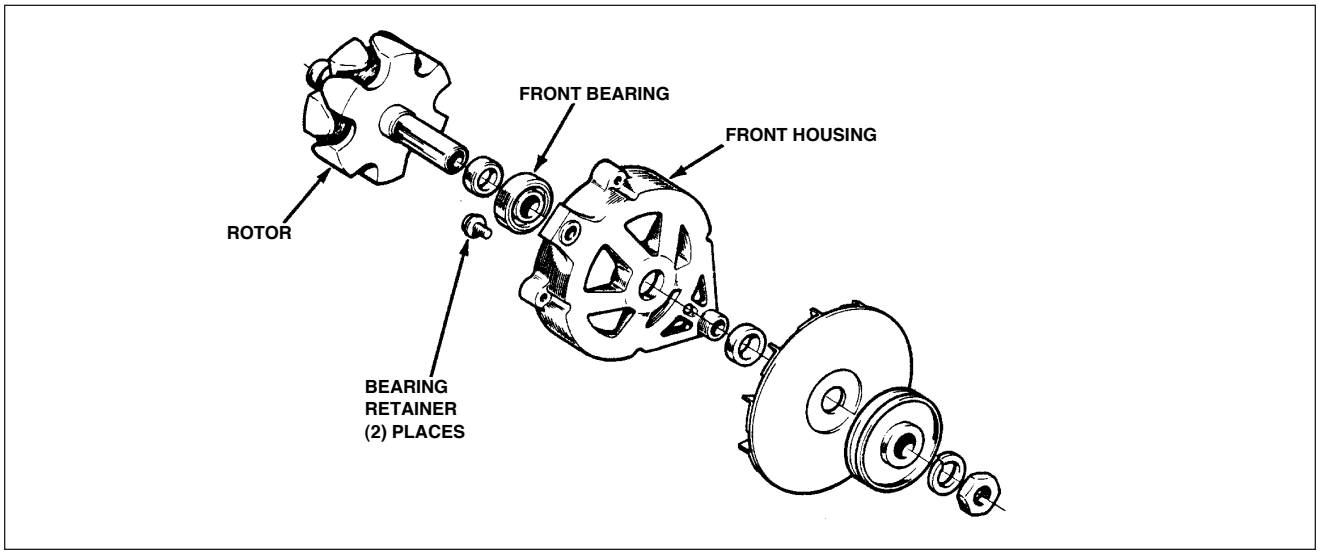

Front Housing Components
Figure 27

D.C. GENERATION (cont.)

(b) Cleaning and Inspection

1 Clean the rotor, stator and bearings with a clean cloth. Do not clean these parts with solvent.

2 Rotate the front bearing on the drive end of the rotor shaft. Check for any scraping noise, looseness, or roughness. Look for excessive lubricant leakage. If any of the conditions exist, replace bearing.

3 Inspect the rotor shaft rear bearing surface for roughness or severe chatter marks. Replace the rotor assembly if the shaft is not smooth.

4 Place the rear bearing on the slip-ring end of the rotor shaft and rotate the bearing. Make the same check for noise, looseness, or roughness as was made for the front bearing. Inspect the rollers and cage for damage. Replace the bearing if these conditions exist, or if the lubricant is lost or contaminated.

5 Check the pulley and fan for excessive looseness on the rotor shaft. Replace any pulley or fan that is loose or bent out of shape.

6 Check both the front and rear housings for cracks, particularly in the webbed areas and at the mounting ear. Replace damaged or cracked housings.

7 Check all wire loads on both the stator and rotor assemblies for loose or broken soldered connections and for burned insulation. Resolder poor connections. Replace parts that show signs of burned insulation.

– CAUTION –

Do not turn down slip-rings beyond a minimum diameter of 1.22 inches. If the rings are badly damaged, replace the rotor assembly.

8 Check the slip-rings (brush contacts) for nicks and surface roughness. Nicks and scratches may be removed by turning down the slip rings.

9 Replace brush assembly if brushes are worn beyond 5/16 inch minimum length.

(c) Rotor Continuity Test (Refer to Figure 28.)

1 Separate front housing and rotor assembly from rear housing by removing four housing-thru bolts and separating rear and front housings. Springs and brushes are not retained by brush holder when housings are separated.

2 Set the ohmmeter selector switch on resistance scale 1 and zero meter.

3 Touch one lead of ohmmeter to each segment of the slip ring. The meter should read 3 to 5 ohms.

4 Readings higher than 5 ohms indicate a damaged solder connection at the slip rings or a broken wire.

5 Readings lower than 3 ohms indicate a shorted wire or slip ring.

6 Replace the rotor if repairs cannot be made.

D.C. GENERATION (cont.)

(c) Rotor Continuity Test (Refer to Figure 28.) (cont.)

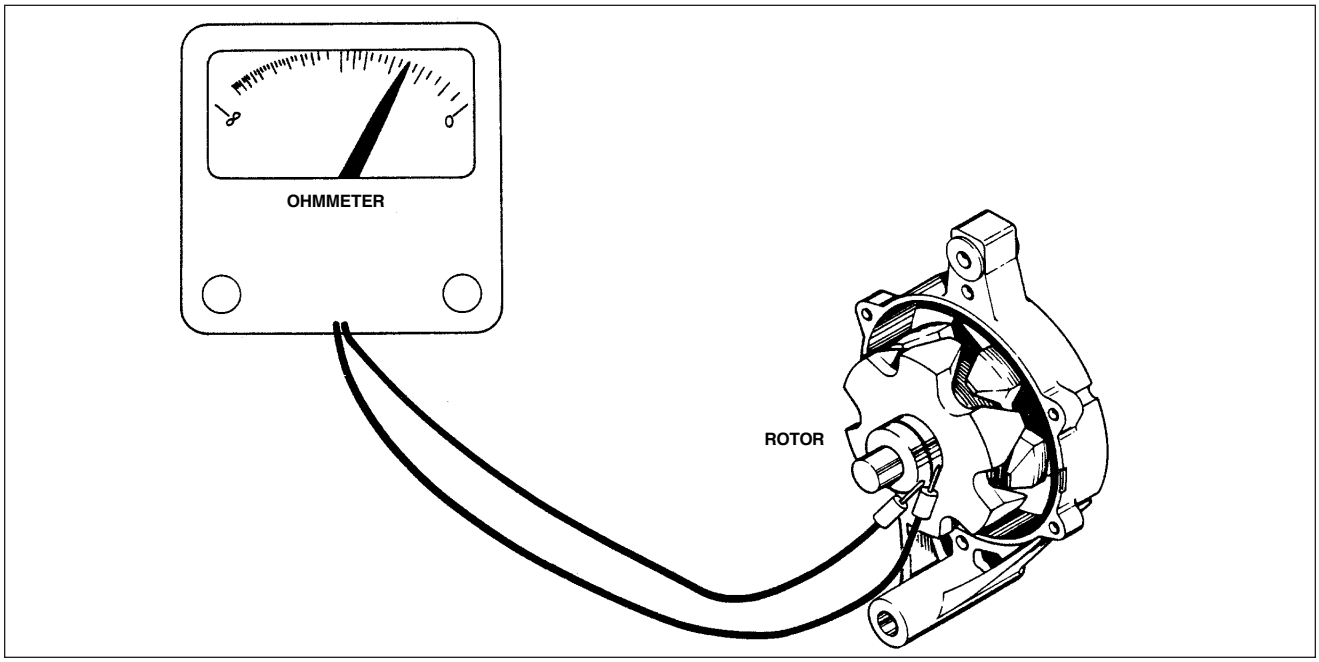

Rotor Continuity Test
Figure 24-28

(d) Rotor Ground Test (Refer to Figure 29.)

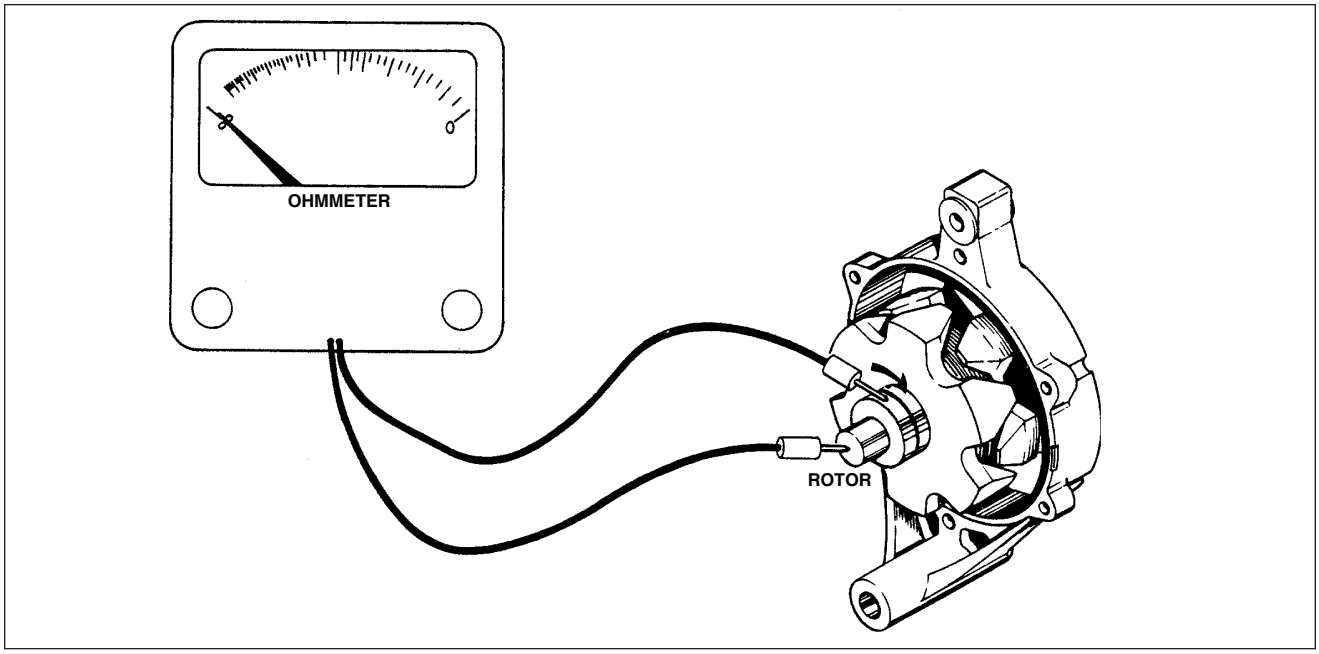

Rotor Ground Test
Figure 29

D.C. GENERATION (cont.)

(d) Rotor Ground Test (Refer to Figure 29.) (cont.)

1 Set the ohmmeter selector switch on 1000 scale and zero the meter.

2 Touch one lead to the rotor shaft and the other lead to first slip ring then to the other. The ohmmeter should read infinity (no needle movement) in both checks.

3 If the meter shows a reading (needle moves) a short to ground exists. Check the soldered connections at the slip rings to make sure they are secure and grounding against the rotor shaft, or that excess solder is not grounding the rotor coil.

4 Replace the rotor if repairs cannot be made.

(e) Stator Continuity Test (Refer to Figure 30)

1 Using a 100 watt soldering iron, disconnect the three stator wires from diode assembly, and remove stator from rear housing.

2 Set the ohmmeter selector switch on resistance scale 1 and zero the meter.

3 Connect ohmmeter leads alternately between all three sets of leads. Meter readings should be equal between any pair of stator leads.

4 If unequal readings are obtained, the stator winding is open. Check wiring junction. If breaks are found repair and recheck. If unequal readings still exist, replace the stator.

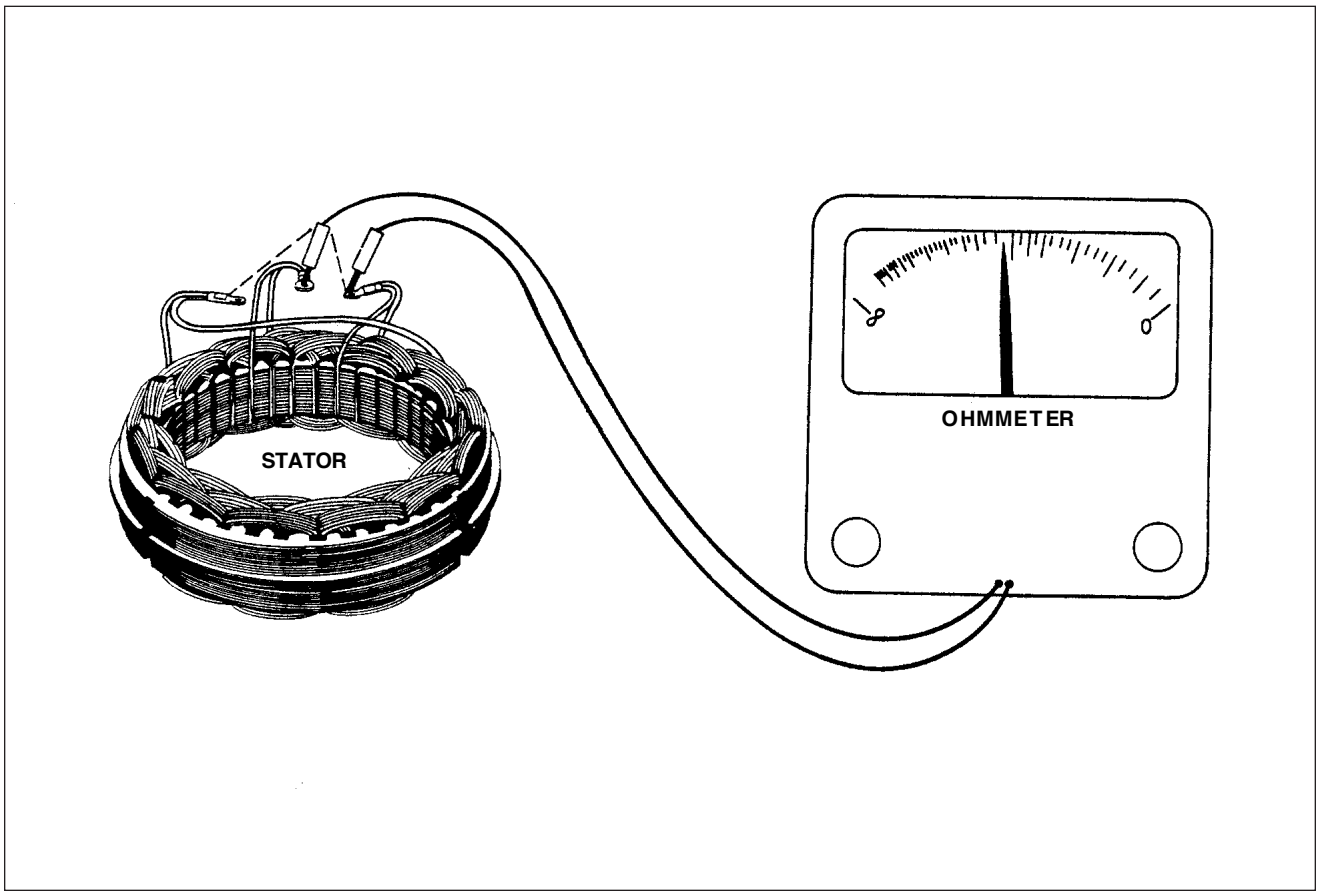

Stator Continuity Test
Figure 30

D.C. GENERATION (cont.)

(f) Stator Ground Test (Refer to Figure 31)

1 Set ohmmeter selector switch on resistance scale 1000 and zero the meter.

2 Connect one meter lead to bare metal portion of stator core and other lead alternately to each of the stator leads. The ohmmeter should read infinity (no needle movement). Be sure lead is making good contact with stator core surface.

3 If meter shows any reading (needle moves) the stator is grounded and must be replaced.

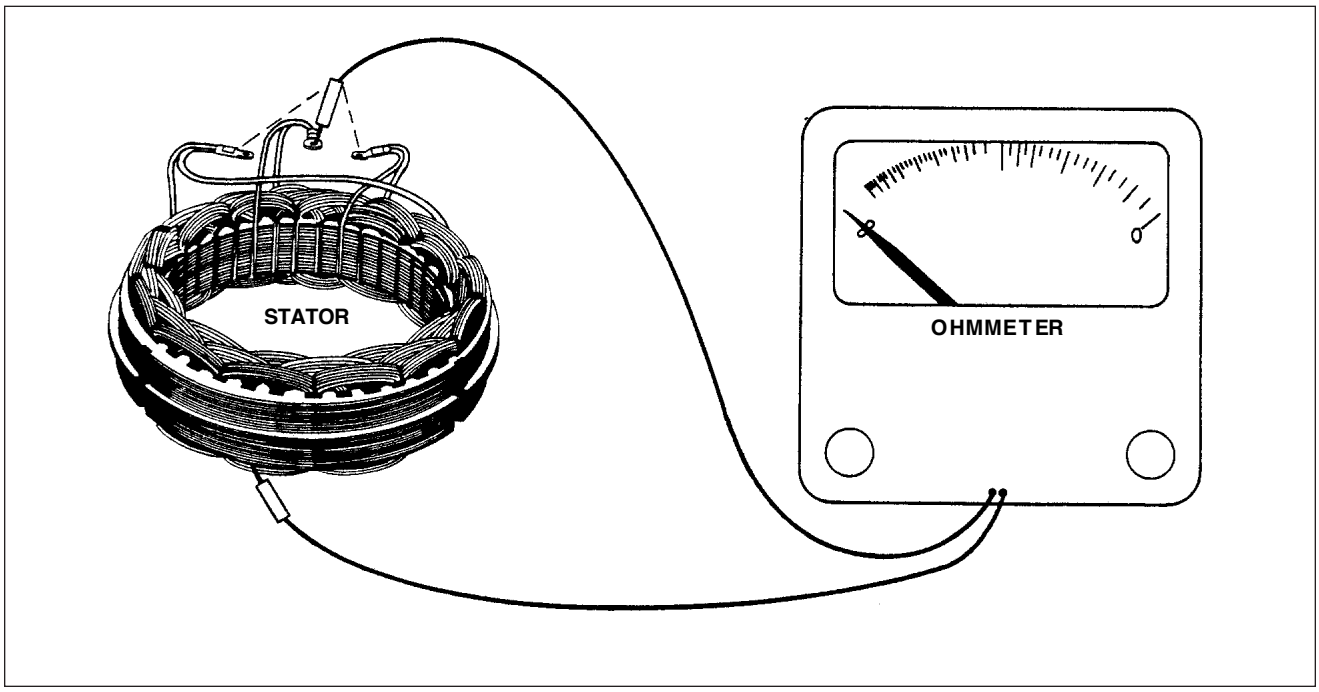

Stator Ground Test
Figure 31

(g) Diode Testing (Refer to Figure 32)

Stator must be disconnected from rectifier assembly to perform this test. Rectifier shown removed for clarity.

1 Set the ohmmeter selector on resistance scale 10 and zero the meter.

2 Test the negative diodes by connecting one ohmmeter lead to "GRD'' post terminal on rectifier and connect other lead to each stator lead connection of rectifier momentarily. Reverse ohmmeter leads and check in opposite direction. Meter must shown continuity in one direction and infinity (no needle movement) in other direction.

3 Test the positive diodes by connecting one ohmmeter lead to the "BAT'' terminal on rectifier and other lead to each stator lead connection of rectifier momentarily. Reverse ohmmeter leads and check in the opposite direction. Meter must show continuity in one direction and infinity (no needle movement) in other direction.

4 If continuity is observed in both directions, the diode(s) is shorted.

5 If no continuity is observed in both directions, the diode(s) is open.

6 Replace the rectifier assembly if open or shorted diodes are found.

D.C. GENERATION (cont.)

(g) Diode Testing (Refer to Figure 32) (cont.)

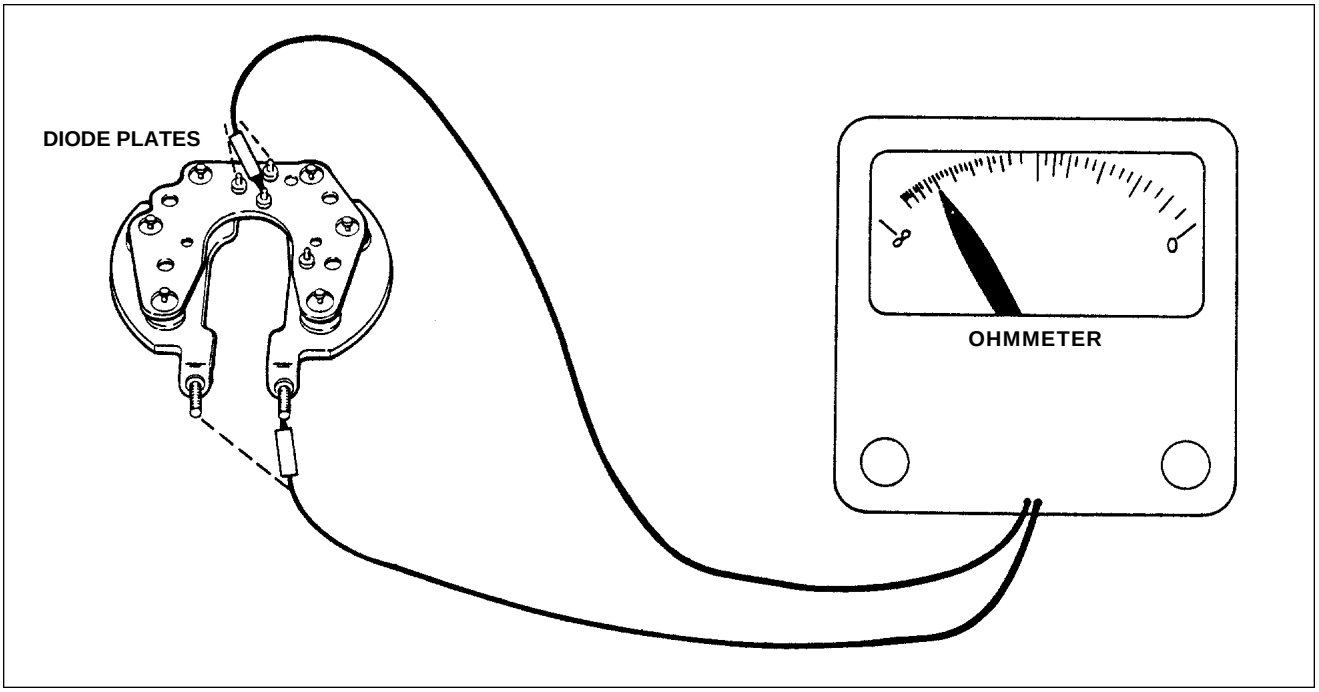

Diode Testing
Figure 32

(h) Assembly Procedure (Refer to Figures 33, 34, 35, and 36)

1 Clean all parts with a lint free cloth.
2 Position the front bearing in the front housing and install the bearing retainer screws.
3 Install spacer on rotor shaft and slide rotor shaft through housing and bearing.
4 Install spacer, fan, pulley, flat washer, lock washer and nut. Tighten the nut to 60-100 ft.-lbs. A special tool similar to Figure 24-33 is required to torque nut. Figure 24-33. Front Housing Assembly
5 If the rear bearing was removed, press a new bearing into place from inside the housing. Apply pressure to the outer race only. Install dust cover over bearing end of housing.
6 Install radio suppressor capacitor in rear of housing and install retainer screw.
7 Install springs and brushes into brush holder. Install short length of .040 wire through brush holder to retain brushes in place. Wire should be long enough to extend through hole in housing for removal after housings are assembled.
8 Install two retainer screws in brush assembly and housing. Hold down on brush assembly while tightening screws, to prevent breaking brush assembly attachment brackets.
9 Install insulator on “BAT’’ post of rectifier assembly and install insulators (2) in place in the rear housing for mounting bolts in positive “BAT’’ side of rectifier.
10 Carefully install rectifier and stator into rear housing. Ensure insulators are in place. Install “BAT’’ post insulator and nut and “GRD’’ post retainer and nut, finger tight.

D.C. GENERATION (cont.)

(h) Assembly Procedure (Refer to Figures 33, 34, 35, and 36) (cont.)

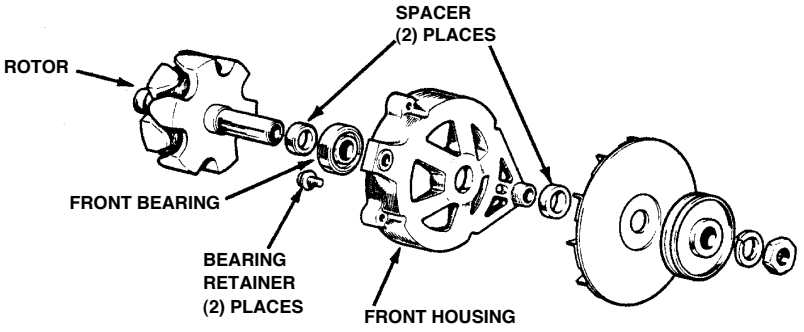

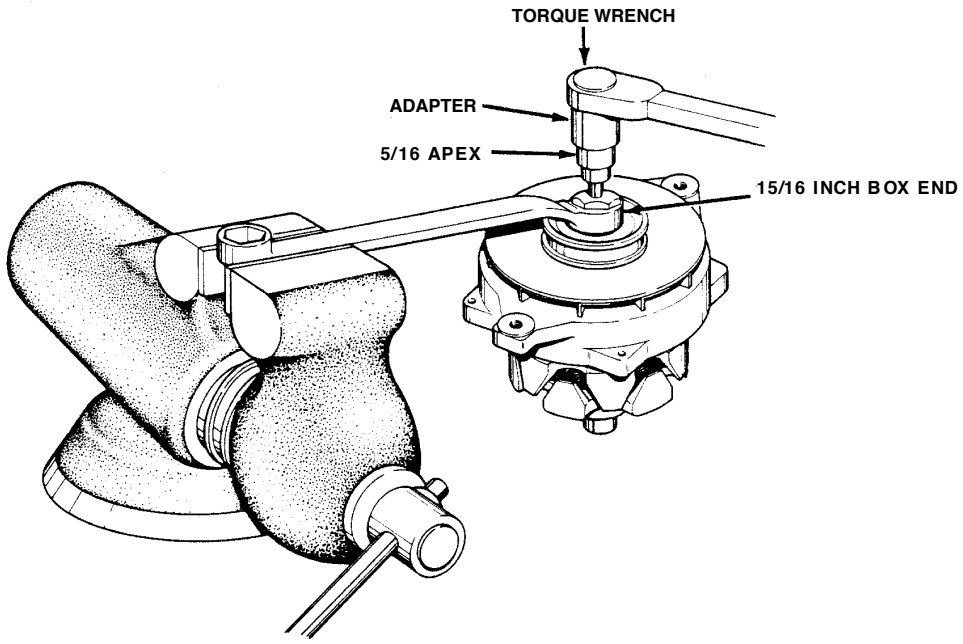

Front Housing Assembly
Figure 33

11 Install the 4 rectifier retainer bolts (check insulators on positive side) finger tight. Install suppression capacitor lead to rectifier and tighten screw.

12 Tighten "BAT" and "GRD" retainer nuts then 4 rectifier retainer bolts.

13 Install the 3 stator winding leads to rectifier posts and solder with 100 watt iron (to prevent overheating of connection) and resin core solder. Solder stator terminal lead to diode assembly.

D.C. GENERATION (cont.)

(h) Assembly Procedure (Refer to Figures 33, 34, 35, and 36) (cont.)

14 Position the front and rear housings together, align scribe marks on housings and stator, and install four thru-bolts in housings. Alternately tighten each thru-bolt around alternator until a preliminary torque of 15 to 25 inch-pounds is reached for each bolt. Final torque each thru-bolt alternately around the alternator until each bolt is torqued 45 to 60 inch-pounds.

15 Spin pulley to ensure that alternator is free of binding or noise.

16 Pull retainer wire from brush assembly and seal hole in housing with EP-711 sealant or equivalent. (Available from Coast Pro-Seal Compton, California or equivalent.)

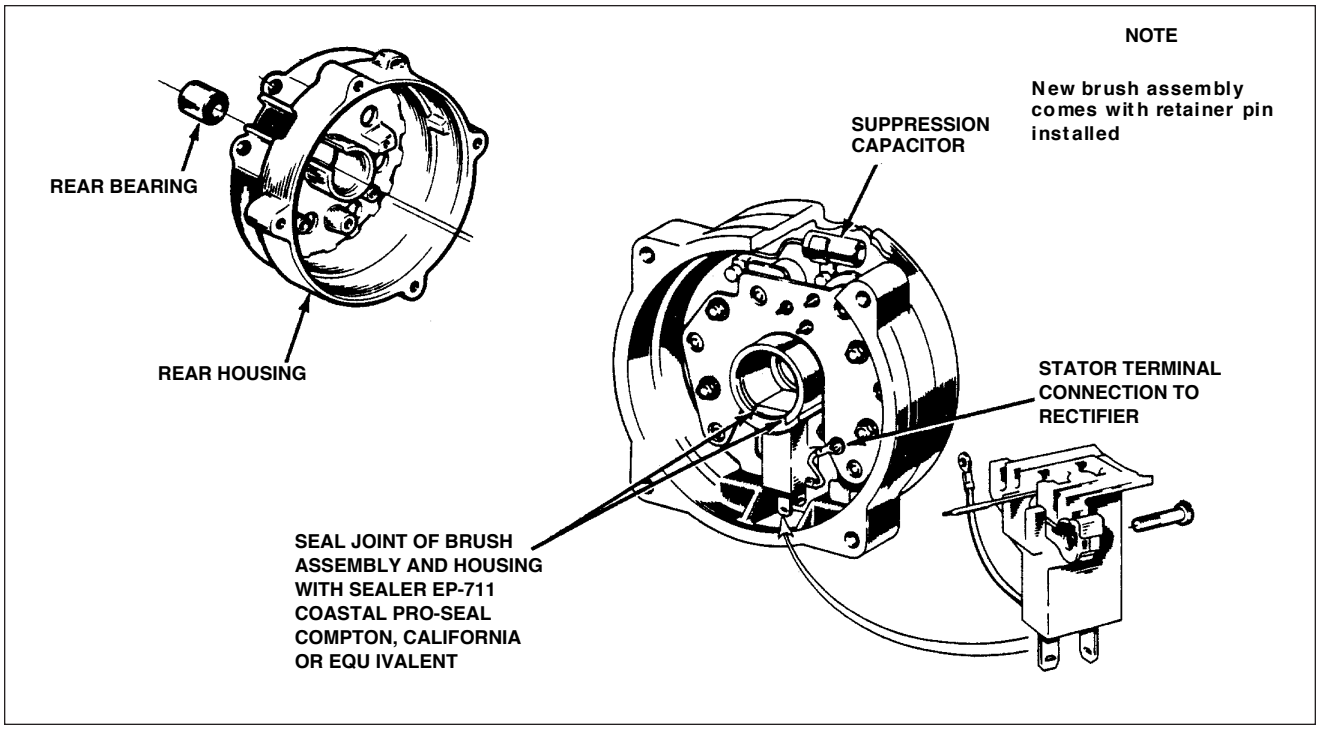

Rear Housing Bearing and Brush Assembly Installation
Figure 34

D.C. GENERATION (cont.)

(h) Assembly Procedure (Refer to Figures 33, 34, 35, and 36) (cont.)

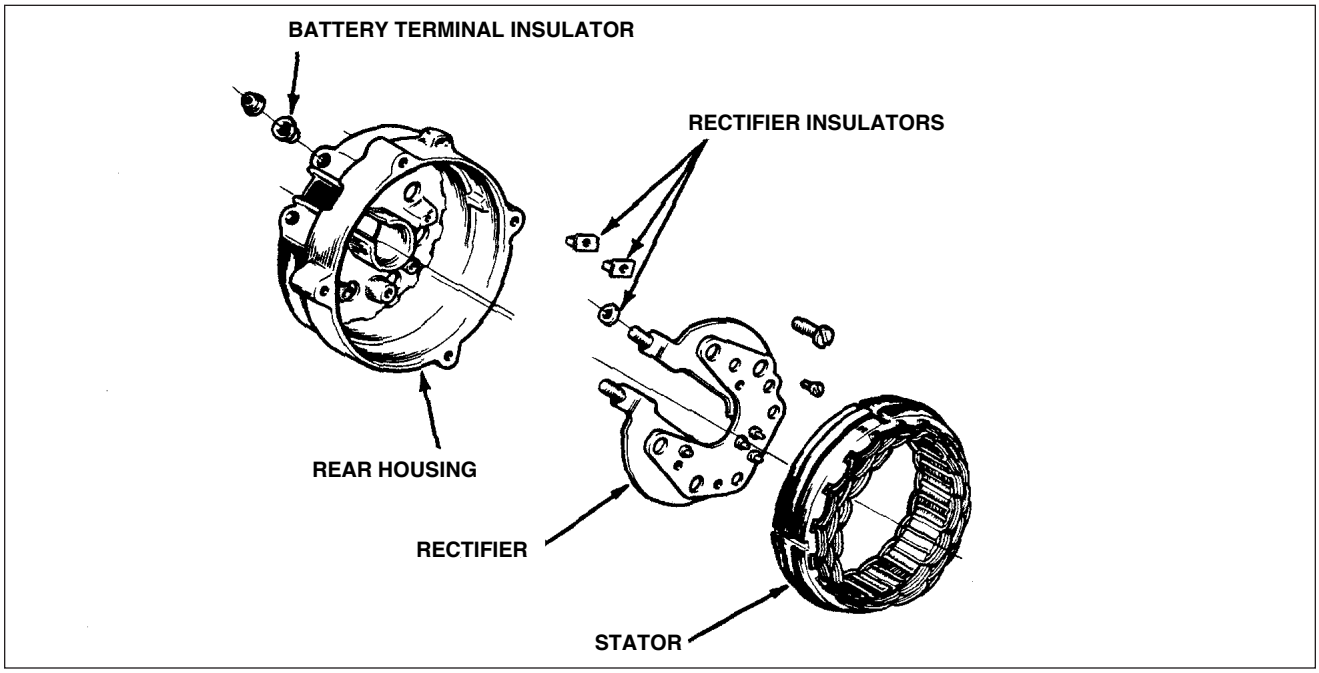

Rear Housing Components
Figure 35

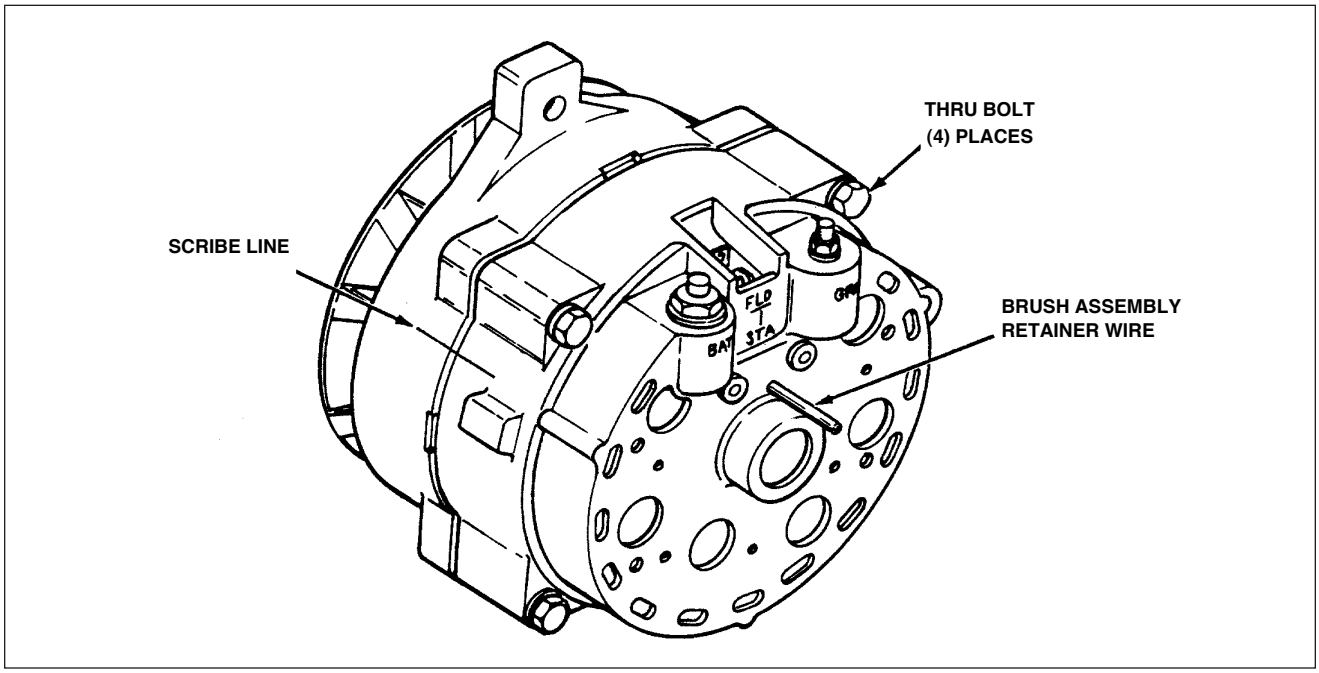

Housings Assembly
Figure 36

D.C. GENERATION (cont.)

(10) Installation (Refer to Figure 37.)

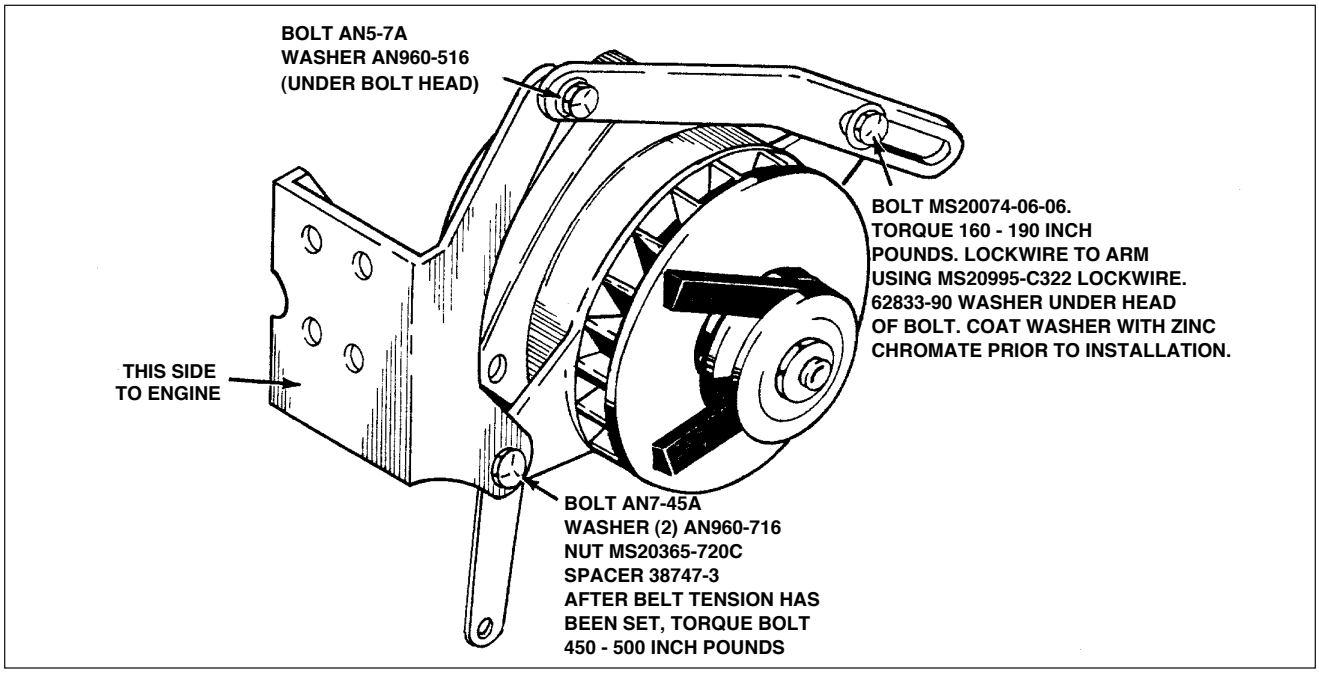

Alternator Installation
Figure 37

(11) Adjusting Alternator Belt Tension.
Loosen bottom mounting bolt and belt adjusting bolt. Adjust alternator belt tension by using a 1 inch open end wrench on adjusting lug of alternator to applying pressure .

Check belt tension for 50 to 70 lbs. span tension. If installing ***new*** belt, first adjust tension to 90-100 lbs. span tension. Then, recheck tension within 0:15 minutes of engine operation. If span tension is less than 50 lbs. adjust tension to 70 lbs.

After tension is set and upper bolt safetied, tighten lower mounting bolt 450 to 500 lb.-in. There should be no end play in alternator mount. Add thin washers between alternator and mount to remove end play.

D. Battery Service

(1) The battery is located under the floor of the forward baggage compartment. It is enclosed in a box with a vent system and a drain. The vents allow fresh air to enter the box and draw off fumes that may accumulate due to the charging process of the battery. The drain is capped off from the bottom of the fuselage and should be opened occasionally to drain any accumulation of liquid or during cleaning of the box. The battery should be checked for fluid level, but must not be filled above the baffle plates. A hydrometer check should be performed to determine the percent of charge in the battery. All connections must be clean and tight. If the battery is not up to normal charge, recharge starting with a charging rate of four amperes and finishing with two. A fast charge is not recommended. Access to the battery is through the external access panel on the right side of the fuselage.

D.C. GENERATION (cont.)

D. Battery Service (cont.)

(2) Battery Removal

(a) Remove external access panel and floor panel located in forward baggage compartment.
(b) Cut the safety wire and remove wing nuts securing battery box cover.
(c) Disconnect battery cables.

– NOTE –

Remove ground cable to prevent an accidental short circuit or arcing.

(d) Lift battery from the box.

(3) Battery Installation

– CAUTION –

Do not install battery with reverse polarity. Connect ground to negative terminal of battery.

(a) Properly position in battery battery box.
(b) Connect battery cables.
(c) Install and safety wire wing nuts securing battery box cover.
(d) Install floor panel and external access panel

(4) Testing Battery

Specific gravity values for checking battery charge using a hydrometer are listed in Chart 5.

If the alternator output is known to be correct, battery capability can be more accurately determined with a load type tester.

CHART 5.
HYDROMETER READING AND BATTERY CHARGE PERCENT

Hydrometer Reading	Percent of Charge
1280	100
1250	75
1220	50
1190	25
1160	Very little useful capacity
1130 or below	Discharged

D.C. GENERATION (cont.)

D. Battery Service (cont.)

(5) Battery Charging

– CAUTION –

Never allow lead acid batteries or tools used on them to be near Ni-Cad batteries and Ni-Cad battery tools.

The National Electric Code forbids charging batteries installed in aircraft or within 10 feet of fuel tank areas. The battery must be removed from the aircraft for charging. Further, an aircraft battery should not be allowed to deteriorate to the point where safety of flight is jeopardized. The batteries emergency capacity should be sufficient to power the essential bus for a minimum of thirty minutes.

(a) Remove battery from airplane.
(b) Remove cell plugs and ensure that vents in plugs are open and that vent valves operate freely.
(c) Check that the electrolyte level in each cell is at the bottom of the split ring.
(d) A hydrometer check of each cell should be accomplished. (Refer to Chart 5)

CAUTION:

If charging is necessary wear eye protection - don't take chances. Also make sure the charging area is well ventilated. If central air conditioning is used, the battery charging area should be vented to the outside air to prevent hydrogen gasses from being circulated throughout the building.

(e) It is recommended a wet cloth be placed over the vent caps within the manifold to prevent splashing of electrolyte.

– NOTE –

Maintenance personnel should refer to latest version of applicable battery manufacturer's service manual for any limitations or special charging procedures.

(f) If a constant current (recommended) charge is available, the charge should be started at 4 amperes and finishing with 2 amps. A fast charge is not recommended.
(g) As charging occurs, if any cells sputter or flood, the electrolyte level is too high and the excess must be removed. In any case the electrolyte level shall be adjusted at the end of the charge. The level will rise due to acid returning to the electrolyte mix, normal gassing, and expansion due to temperature rise.
(h) Thoroughly clean battery after charging to prevent remaining acid bridges which can form during charging.

(6) Battery Corrosion Prevention.

Check battery for spilled electrolyte or corrosion each 50 hour inspection or every 30 days, whichever comes first. Should spilled electrolyte or corrosion be found in box, on terminals or around battery, clean both box and battery by the following procedure:

D.C. GENERATION (cont.)

(6) Battery Corrosion Prevention (cont.)
(a) Remove battery from airplane.
(b) Remove box drain cap from under side of fuselage. Drain off any electrolyte that has overflowed into box.

—CAUTION—

Do not allow soda solution to enter battery.

(b) Clean the battery and the box. Corrosion effects may be neutralized by applying a solution of baking soda and water mixed to a consistency of thin cream. Apply mixture until all bubbling action has ceased.
(c) Rinse battery and box with clean water and dry.
(d) Install cap over battery box drain.
(e) Install battery in airplane.

E. Checking Voltage Regulator
The regulator is a fully transistorized unit in which all of the components are encapsulated in epoxy, which makes field repair of the unit impractical. If it does not meet specifications, it must be replaced.

(1) Testing regulator
(a) Be sure battery is fully charged and in good condition.
(b) Check proper functioning of alternator according to the manufacturer's instructions. Test must be done with regulator out of the circuit. After completing test, connect the regulator into the circuit.
(c) Use a good quality accurate voltmeter with at least a 20-volt scale.
1 Connect positive voltmeter lead to red wire at the regulator harness connector or terminal block.
2 Connect negative voltmeter lead to the regulator housing.

– NOTE –

Do not connect voltmeter across battery, because regulator is designed to compensate for resistance contained within wiring harness.

3 With the alternator turning at sufficient rpm to produce a half load condition, or approximately 25 amperes output, voltmeter should read between 13.6 and 14.3-volts. During test, ambient temperatures surrounding the voltage regulator should be between 50°F to 100°F.
(d) The voltage regulator heat sink, or case, is the ground connection for the electronic circuit. Therefore, if this unit is tested on the bench, it is most important that a No. 14 wire be connected between the regulator case and the alternator. If the regulator does not regulate between 13.6 and 14.4-volts, one of the following conditions may exist:
1 Regulates, but out of specification. The regulator is out of calibration and must be replaced.

—NOTE—

The 68804-3 (Lamar) regulator has a black ground wire that must have a low resistance connection to the ground system. It is adjustable and should be set to 14.0-volts

D.C. GENERATION (cont.)

E. Checking Voltage Regulator (cont.)

2 The voltmeter continues to read battery voltage.

a Poor or open connections within the wiring harness.

b The regulator is "open."

3 Voltage continues to rise.

a Regulator housing not grounded.

b Regulator shorted, must be replaced.

(2) Major causes of regulator failure are:

(a) Poor or loose connections.

(b) Poor ground on the regulator housing.

(c) Shorted alternator windings.

(d) A grounded yellow wire. (Will cause instantaneous failure.)

(e) Disconnecting the regulator while the circuit energized.

(f) Open circuit operation of the alternator. (Battery disconnected.)

F Checking Overvoltage Relay

(1) Equipment required to test overvoltage relay

(a) A good quality, accurate voltmeter, with a scale of at least 20-volts,

(b) A suitable power supply, with an output of at least 20-volts, or sufficient batteries with a voltage divider to regulate voltage

(2) Connect test equipment as follows:

(a) Connect B+ to "Bat'' of the overvoltage control. Be sure connection is secure and made to a clean, bright surface.

(b) Connect B- to frame of the overvoltage control. Be sure connection is secure and made to a clean, bright surface.

(c) Connect positive lead of voltmeter to the "Bat'' terminal of overvoltage control.

(d) Connect negative lead of voltmeter to frame of the overvoltage control.

(3) Set overvoltage control to operate between 16.2-volts to 17.3-volts. When adjusting the voltage, an audible "click'' may be heard when relay operates.

(4) Replace overvoltage control if it does not operate between 16.2 and 17.3-volts.

EXTERNAL POWER.

A. Operation of External Power Receptacle
The external power receptacle is located on the left side of the nose section just aft of the engine cowling.

Use the following procedure when utilizing external power for engine start or operation of any of the airplane's equipment, :

(1) Turn the master switch OFF
(2) Turn all electrical equipment OFF.
(3) Connect RED lead of the PEP kit jumper cable to the POSITIVE (+) terminal and BLACK lead to the NEGATIVE (-) terminal of an external 12-volt battery.
(4) Insert plug of jumper cable into external power socket located on fuselage. Note that, after inserting plug, the electrical system is ON.
(5) Proceed with the normal engine starting technique.
(6) After engine start:
  (a) Reduce power to the lowest possible rpm to reduce sparking when disconnecting jumper cable
  (b) Disconnect the jumper cable from the aircraft.
  (c) Turn the master switch ON and check the alternator ammeter.
  DO NOT ATTEMPT FLIGHT IF THERE IS NO INDICATION OF ALTERNATOR OUTPUT. If aircraft battery is weak, charging current will be high. DO NOT TAKE OFF until charging current falls below 20 amps.

– NOTE –

For all normal operations using the PEP jumper cables, the master switch should be OFF. It is possible to use the aircraft battery in parallel by turning the master switch ON. This will give longer cranking capabilities, but will not increase the amperage. Care should be exercised because, if aircraft battery has been depleted, the external power supply can be reduced to level of the aircraft battery. This can be tested by turning the master switch ON momentarily while the starter is engaged. If cranking speed increases, the aircraft battery is at a higher level than the external power supply.

When the engine is firing evenly, advance throttle to 800 RPM. If oil pressure is not indicated within thirty seconds, stop engine and determine trouble. It will take a few seconds longer in cold weather to get an oil pressure indication. If the engine fails to start, refer to the Lycoming Operating Handbook, Engine Troubles and Their Remedies.

Starter manufacturers recommended that cranking periods be limited to thirty seconds with a two minute rest between cranking periods. Longer cranking periods will shorten the life of the starter.

THIS PAGE INTENTIONALLY LEFT BLANK

ELECTRICAL SYSTEM LOAD DISTRIBUTION

A. Electrical System Loads

CHART 6
ELECTRICAL SYSTEM COMPONENT LOADS

Duty Cycle		Circuit	Load		
Cont.	Inter.	Equipment	Breaker	(Amps)	Optional
X		Anti-Collision Light			
		Grimes 40-0101-XX-12	10	3.5	
		Whelen WRML-12	10	3.5	
		Whelen White Strobe	10	3.8	X
X		Position Lights	7	5.4	
	X	Landing Lights	10	8.0	
X		Instrument Light(s)	5	(Max)	
		Red Flood	5	1.0	
		Panel	5	2.4	
	X	Reading Light			
		Dome	5	0.6	
	X	Fuel Pump			
		Pulsating (Carb)	10.5		
X		Engine Gauges	5	Approx. 1.0	
X		Elec. Turn & Bank	5	0.5	
X		Pitot Heat	15	13.2	
	X	Cigar Lighter		8.0	
X		Master Solenoid	—	0.8	
		X Starter Solenoid	15	10.0	
		Avionics (See Mfg's Installation Manual)			
	X	Propeller Deice (2 Blades)X	15	12	
	X	Propeller Deice (3 Blades)X	15	18	
	X	Windshield Deicer	15	14	X

THIS PAGE INTENTIONALLY LEFT BLANK



SARATOGA SP
SARATOGA II HP

MAINTENANCE MANUAL

PA-32R-301 SARATOGA SP
PA-32R-301 SARATOGA II HP
PA-32R-301T SARATOGA SP

Card 2 of 4

THIS HANDBOOK INCLUDES THE MAINTENANCE INFORMATION REQUIRED TO BE AVAILABLE BY FAR PART 23.

PART NUMBER 761 719

Published by
Technical Publications

Piper Aircraft Corporation
2926 Piper Drive
Vero Beach, Florida 32960
U.S.A.

Copyright 1990 Piper Aircraft Corporation

All rights reserved. No part of this publication may be reproduced, stored in a retrieval system, or transmitted, in any form or by any means, electronic, mechanical, photocopying, recording, or otherwise, without the prior written permission of the Piper Aircraft Corporation, except for the inclusion of brief quotations in a review.

INTRODUCTION

TABLE OF CONTENTS/EFFECTIVITY

CHAPTER SECTION	SUBJECT	GRID NO.	EFFECTIVITY
	INTRODUCTION	2A3	
	System/Chapter Index Guide	2A3	

INTRODUCTION

A. System/Chapter Index Guide

The following System/Chapter, Subsystem Section Index Guide is prepared in accordance with GAMA Specification No. 2 for use with Maintenance Manuals. The following chapters are not applicable to this Maintenance Manual: 31, 36, 38, 49, 53, 54, 60, 72, 75, and 83.

SYSTEM/ CHAPTER	SUB-SYSTEM/ SECTION – GRID NUMBER	TITLE
INTRODUCTION		
4	AIRWORTHINESS LIMITATIONS	
	00 – 1C3	General
5	TIME LIMITS/MAINTENANCE CHECKS	
	00 – 1C6	General
	10 – 1C7	Time Limits
	20 – 1C8	Scheduled Maintenance
	50 – 1D2	Unscheduled Maintenance Checks
6	DIMENSIONS AND AREAS	
	00 – 1D8	General
7	LIFTING AND SHORING	
	10 – 1D23	Jacking
8	LEVELING AND WEIGHING	
	10 – 1E3	Weighing and Balancing
	20 – 1E4	Leveling
9	TOWING AND TAXIING	
	10 – 1E7	Towing
	20 – 1E8	Taxiing
10	PARKING AND MOORING	
	10 – 1E11	Parking
	20 – 1E12	Mooring
11	REQUIRED PLACARDS	
	20 – 1E15	Exterior Placards and Markings
	30 – 1E19	Interior Placards and Markings
12	SERVICING	
	00 – 1F4	General
	10 – 1F7	Replenishing
	20 – 1G1	Scheduled Servicing
20	STANDARD PRACTICES - AIRFRAME	
	00 – 1G19	General

INTRODUCTION (cont.)

A. System/Chapter Index Guide (cont.)

SYSTEM/ CHAPTER	SUB-SYSTEM/ SECTION – GRID NUMBER	TITLE
21	ENVIRONMENTAL SYSTEMS	
	00 – 1H8	General
	40 – 1H10	Heating
	50 – 1H14	Cooling
22	AUTO FLIGHT	
	00 – 1J9	General
23	COMMUNICATIONS	
	00 – 1J14	General
	20 – 1J16	Emergency Locator Transmitter
24	ELECTRICAL POWER	
	00 – 1K1	General
	30 – 1K3	DC Generation
	40 – 1L19	External Power
	50 – 1L21	Electrical Load Distribution
25	EQUIPMENT/FURNISHINGS	
	10 – 2A15	Flight Compartment
27	FLIGHT CONTROLS	
	00 – 2A23	General
	10 – 2B7	Aileron and Tab
	20 – 2B18	Rudder and Tab
	30 – 2C5	Elevator and Tab
	50 – 2C21	Flaps
28	FUEL	
	00 – 2D14	General
	10 – 2D20	Storage
	20 – 2E10	Distribution
	40 – 2E14	Indicating
29	HYDRAULIC POWER	
	00 – 2E21	General
	10 – 2F19	Main

INTRODUCTION (cont.)

A. System/Chapter Index Guide (cont.)

SYSTEM/ CHAPTER	SUB-SYSTEM/ SECTION – GRID NUMBER	TITLE
30	ICE AND RAIN PROTECTION	
	00 – 2G19	General
	10 – 2H1	Airfoil
	30 – 2H17	Pitot and Static
	40 – 2H19	Windows, Windshields and Doors
	60 – 2H21	Propellers/Rotors
	80 – 2H23	Detection
32	LANDING GEAR	
	00 – 3A18	General
	10 – 3B4	Main Gear and Doors
	20 – 3B22	Nose Gear and Doors
	30 – 3C16	Extension and Retraction
	40 – 3C22	Wheels and Brakes
	60 – 3D18	Position and Warning
33	LIGHTS	
	00 – 3E2	General Compartment
	10 – 3E6	Flight Compartment
	40 – 3E8	Exterior
34	NAVIGATION AND PITOT/STATIC	
	00 – 3E14	General
	10 – 3E18	Flight Instrtuments Pitot/Static
	20 – 3E22	Attitude & Direction
	40 – 3F2	Independent Position Determining
35	OXYGEN	
	00 – 3F10	General
	10 – 3F12	Crew – Passenger
37	VACUUM	
	00 – 3G8	General
	10 – 3G12	Distribution
	20 – 3G16	Indicating

INTRODUCTION (cont.)

A. System/Chapter Index Guide (cont.)

SYSTEM/ CHAPTER	SUB-SYSTEM/ SECTION – GRID NUMBER	TITLE
39	ELECTRICAL / ELECTRONIC PANELS & MULTIPURPOSE PARTS	
	40 – 3G20	Multipurpose Elecrtical Parts
51	STRUCTURES	
	00 – 3G24	General
52	DOORS	
	00 – 3H16	General
	10 – 3H18	Passenger/Crew
	30 – 3I2	Cargo
55	STABILIZERS	
	10 – 3I6	Horizontal Stabilizers
	30 – 3I12	Vertical Stabilizer
	40 – 3I14	Rudder
56	WINDOWS	
	10 – 3I18	Flight Compartment
	20 – 3I20	Cabin
57	WINGS	
	00 – 3J2	General
	20 – 3J4	Auxiliary Structure
	40 – 3J6	Attach Fittings
	50 – 3J12	Flight Surfaces
61	PROPELLERS	
	10 – 3J20	Propeller Assembly
	20 – 3K6	Controlling
70	STANDARD PRACTICES - ENGINE	
	00 – 3K12	General
71	POWER PLANT	
	00 – 3K16	General
	10 – 3L6	Cowling

INTRODUCTION (cont.)

A. System/Chapter Index Guide (cont.)

SYSTEM/ CHAPTER	SUB-SYSTEM/ SECTION – GRID NUMBER	TITLE
73	ENGINE FUEL SYSTEMS	
	10 – 4A15	Distribution
	20 – 4A20	Controlling
74	IGNITION	
	00 – 4B3	General
	10 – 4B5	Electrical Power Supply
	20 – 4B22	Distribution
	30 – 4C7	Switching
77	ENGINE INDICATING	
	00 – 4C13	General
	10 – 4C13	Power
	20 – 4C16	Temperature
78	EXHAUST	
	00 – 4C23	General
79	OIL	
	20 – 4D7	Distribution
	30 – 4D7	Indicating
80	STARTING	
	00 – 4D11	General
	10 – 4D15	Cranking
81	TURBINES	
	20 – 4E1	Turbo-Supercharger
91	CHARTS & WIRING DIAGRAMS	
	00 – 4E16	General
	10 – 4F19	Electrical Schematics
95	SPECIAL PURPOSE EQUIPMENT	
	00 – 4J8	Special Purpose Equipment

– END –

GRIDS 2A9 THROUGH 2A12
INTENTIONALLY LEFT BLANK

CHAPTER

25

EQUIPMENT/ FURNISHINGS

CHAPTER 25- EQUIPMENT/FURNISHINGS

TABLE OF CONTENTS/EFFECTIVITY

CHAPTER SECTION	SUBJECT	GRID NO.	EFFECTIVITY
25-10-00	FLIGHT COMPARTMENT	2A15	July 1, 1993
25-10-00	Pilot Seat Lock and Release Rigging	2A15	July 1, 1993
25-00-00	Shoulder Harness Inertia Reel Adjustment	2A16	July 1, 1993

FLIGHT COMPARTMENT

A Pilots Seat Lock and Release Rigging (Refer to Figure 1.)

(1) Loosen screws and determine that clamps are in a relaxed condition. (Push-pull cable is able to move within the clamps.)

(2) Place a straightedge along lower surface of seat back release bushing.

(3) Raise or lower push-pull cable until lower surface of stop assembly is parallel to straightedge.

(4) Tighten screws on clamps to secure push-pull cable in this position. Stop should be lubricated and free to swivel without excessive play.

(5) With stop assembly in an engaged position, push on seat back to check engagement. Rotate the seat back release handle and check for disengagement of seat back.

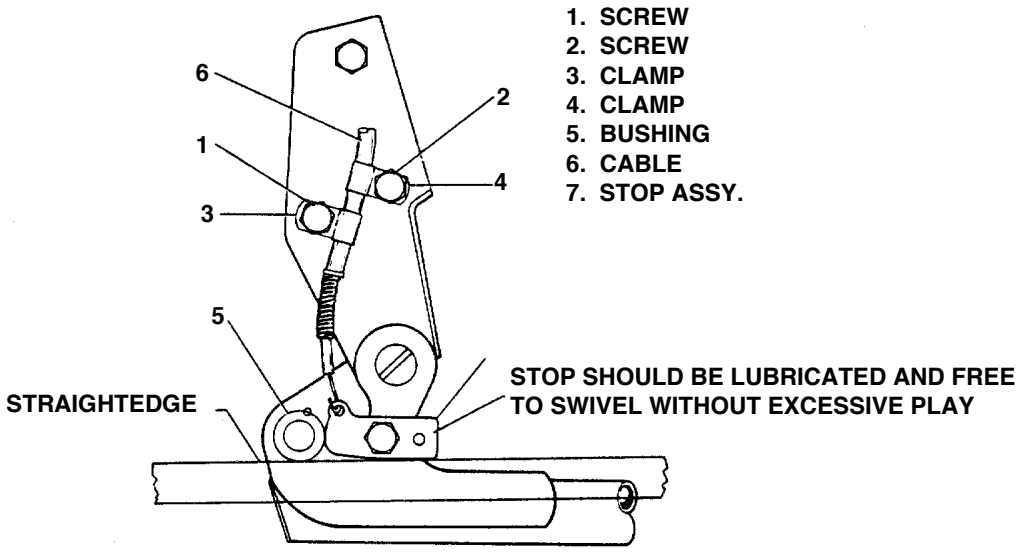

Seat Back Lock
Figure 1

B Shoulder Harness Inertia Reel Adjustment

(1) Allow the harness to wind up on the reel as much as possible.

(2) On the end of the reel, pry off the plastic cap over the spring, making sure the spring does not come out of the plastic cup, and set aside.

(3) Unwind the harness completely, then measure and mark the harness 24 inches from the reel center.

(4) Wind the harness onto the reel until the 24 inch mark is reached, then hold reel and place cap with spring over the reel shaft end.

(5) Aligning slot in shaft with spring tang, wind spring 6 turns 1/2 turn and snap plastic cover into holes in reel end shaft.

(6) Release harness and allowing it to wind up, extend the harness a few times to check reel for smooth operation.

(7) With reel fully wound, hold with inertia mechanism end up and pry off plastic cap over mechanism and set reel aside.

(8) Install nut in plastic cap so that stud in cap is flush with nut surface, then reposition cap over reel end and orientating properly, snap in place. Extend harness a few times to make sure action is correct.

INTENTIONALLY LEFT BLANK

GRIDS 2A18 THROUGH 2A19
INTENTIONALLY LEFT BLANK

CHAPTER

27

FLIGHT CONTROLS

CHAPTER 27- FLIGHT CONTROLS

TABLE OF CONTENTS/EFFECTIVITY

CHAPTER SECTION	SUBJECT	GRID NO.	EFFECTIVITY
27-00-00	FLIGHT CONTROLS	2A23	July 1, 1993
27-00-00	General Information	2A23	July 1, 1993
27-00-00	Description and Operation	2A23	July 1, 1993
27-00-00	Standard Practices andProcedures	2A23	July 1, 1993
27-00-00	Control Cable Inspection	2B1	July 1, 1993
27-00-00	Cable Maintneance	2B4	July 1, 1993
27-00-00	Cable Fittings	2B4	July 1, 1993
27-00-00	Pulleys	2B4	July 1, 1993
27-10-00	AILERON CONTROLS	2B7	July 1, 1993
27-10-00	Troubleshooting Aileron Control System	2B7	July 1, 1993
27-10-00	Control Column Removal	2B8	July 1, 1993
27-10-00	Control Column Installation	2B10	July 1, 1993
27-10-00	To Install Flex Joint Replacement	2B10	July 1, 1993
27-10-00	Aileron Control Cables Removal	2B11	July 1, 1993
27-10-00	Aileron Control Cables Installation	2B13	July 1, 1993
27-10-00	Aileron Bellcrank Assembly Removal	2B14	July 1, 1993
27-10-00	Aileron Bellcrank Assembly Installation	2B14	July 1, 1993
27-10-00	Aileron Controls Rigging and Adjustment	2B15	July 1, 1993
27-20-00	RUDDER AND TRIM CONTROLS	2B18	July 1, 1993
27-20-00	Troubleshooting Rudder Control System	2B18	July 1, 1993
27-20-00	Rudder Control Cables Removal	2B19	July 1, 1993
27-20-00	Rudder Control Cables Installation	2B19	July 1, 1993
27-20-00	Rigging and Adjustment of Rudder Controls	2B21	July 1, 1993
27-20-00	Rudder Trim Control	2B23	July 1, 1993
27-20-00	To Remove Rudder Trim Control	2B23	July 1, 1993
27-20-00	To Install Rudder Trim Control	2B23	July 1, 1993
27-20-00	Rigging and Adjustment of Rudder Trim Controls	2B24	July 1, 1993
27-20-00	Rudder and Steering Pedal Assembly	2C1	July 1, 1993
27-30-00	STABILATOR CONTROLS	2C5	July 1, 1993
27-30-00	Troubleshooting Rudder Control System	2C5	July 1, 1993
27-30-00	Stabilator Control Cables Removal	2C7	July 1, 1993
27-30-00	Stabilator Control Cables Installation	2C7	July 1, 1993
27-30-00	Stabilator Control Rigging and Adjustment	2C9	July 1, 1993
27-30-00	Stabilator Trim Assembly	2C12	July 1, 1993
27-30-00	Stabilator Trim Rigging and Adjustment	2C17	July 1, 1993
27-30-00	Stall Warning System	2C18	July 1, 1993
27-30-00	Description an Operation	2C18	July 1, 1993
27-30-00	Removal of Lift Detectors	2C18	July 1, 1993
27-30-00	Installation of Lift Detector	2C18	July 1, 1993
27-30-00	Adjustment of Lift Detector	2C18	July 1, 1993

CHAPTER 27- FLIGHT CONTROLS

TABLE OF CONTENTS/EFFECTIVITY

CHAPTER SECTION	SUBJECT	GRID NO.	EFFECTIVITY
27-50-00	FLAPS	2C21	July 1, 1993
27-50-00	Flap Operating Systems	2C21	July 1, 1993
27-50-00	Manually Operated Flaps	2C21	July 1, 1993
27-50-00	Removal of Manually Operated Wing		
27-50-00	Flap Controls	2C2	1July 1, 1993
27-50-00	Installation of Manually Operated Wing		
27-50-00	Flap Controls	2C23	July 1, 1993
27-50-00	Manually Operated Wing Flaps Rigging		
	and Adjustment	2C24	July 1, 1993
27-50-00	Electrically Operated Wing Flaps	2D2	July 1, 1993
27-50-00	Removal of Electrically Operated Wing		
	Flaps Controls	2D2	July 1, 1993
27-50-00	Installation of Electrically Operated		
	Wing Flap Controls	2D4	July 1, 1993
27-50-00	Rigging and Adjustment of Electric		
	Wing Flaps	2D5	July 1, 1993

FLIGHT CONTROLS

A. General Information

(1) Description and Operation.

The airplane is controlled in flight by the use of three primary control surfaces: ailerons, stabilator and rudder. The controls are operated by movement of the control column-tee bar assembly and rudder pedals. On the forward end of each control column is a sprocket assembly. A chain is wrapped around the sprockets to connect the right and left controls and then back to idler sprockets on the column's tee bar, which connect to the aileron primary control cables. The cables operate the aileron bellcrank and push-pull rods. The stabilator is controlled by a cable connected to the bottom of the tee bar assembly and operates an aft fuselage bellcrank which controls a push rod connected to the balance arm of the stabilator. Cables also connect the rudder pedals with the rudder horn. Provisions for directional and longitudinal trim control is provided by an adjustable trim mechanism for the stabilator and rudder. The stabilator trim is controlled by a wheel and drum mounted on the floor tunnel between the front seats. Cables routed aft from the drum to a screw assembly mounted above the stabilator attachment point. This screw assembly in turn moves the push rod which controls the stabilator trim tab. The rudder trim is controlled by a knob and screw assembly attached to the rudder pedal assembly. The flaps are mechanically operated on early models and electrically operated on 1985 and later models.

(2) Standard Practices and Procedures

The following tips may be helpful in the removal, installation, and rigging of individual control system assemblies.

(a) Turnbuckles must be assembled and adjusted in a manner that each terminal end is screwed into the barrel an approximately equal distance. During adjustment, the terminals must not be turned in a manner which would put a permanent twist in the cable.
(b) After adjustment is completed, each turnbuckle must be checked. Not more than three terminal threads shall be visible outside the barrel. Locking clips must be installed and checked for proper installation by trying to remove the clips using fingers only. Locking clips which have been installed and removed must be scrapped and new clips used.
(c) Torque all nuts in the flight control surface rigging system in accordance with AC 43.13-1A or to torques specified within this manual.
(d) After completion of adjustment, each jam nut must be tightened securely and inspected.
(e) On push rods or rod ends provided with an inspection hole, screws must be screwed in sufficiently far to pass the hole. This can be determined visually or, by feel, by inserting a piece of wire into the inspection hole. If no inspection hole is provided, a minimum of 0.375 of an inch thread engagement must be maintained.
(f) All cable rigging tensions given must be corrected to ambient temperature in the area where the tension is being checked. Refer to Chart 1.
(g) See Figure 1 for proper method of adjusting rod ends to prevent possible damage and binding of bearing surface in rod end.
(h) All pulley guard pins should be properly installed.

FLIGHT CONTROLS (cont.)

A. General Information (cont.)

Chart 1
Cable Tension Vs Ambient Temperature

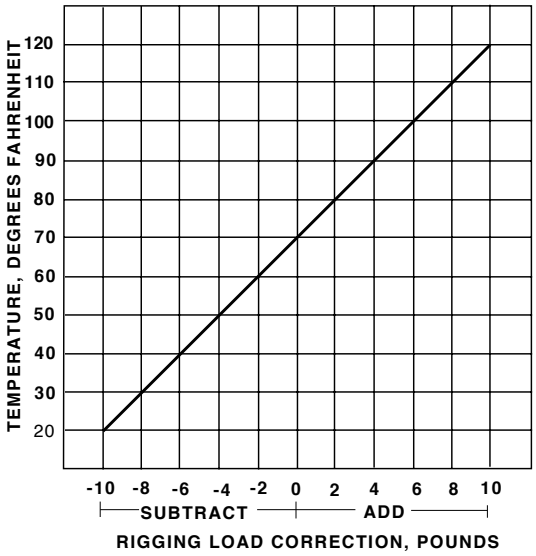

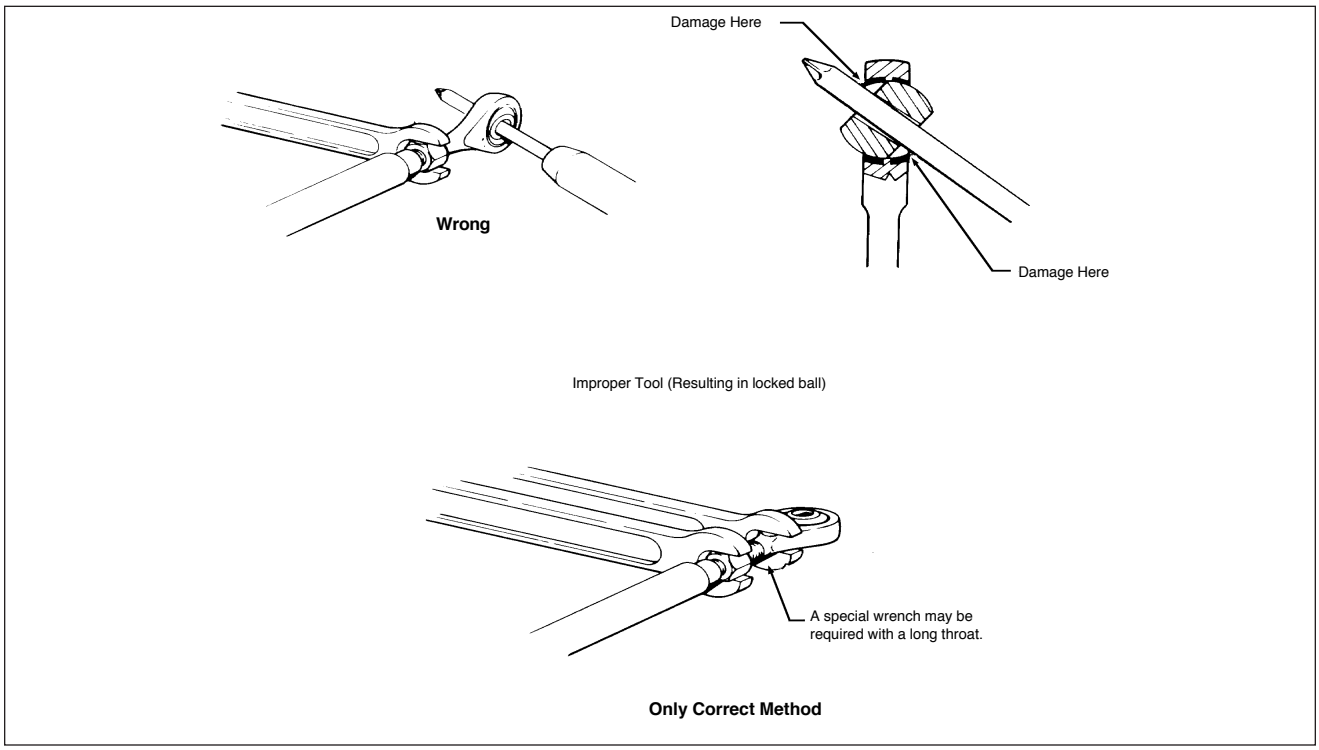

Rod End Installation Method
Figure 1

FLIGHT CONTROLS (cont.)

A. General Information (cont.)

(3) Control Cable Inspection

Aircraft control cable systems are subject to a variety of environmental conditions and forms of deterioration that, with time, may be easy to recognize as wire/strand breakage or the not-so-readily visible types of wear, corrosion, and/or distortion. The following data may help in detecting the presence of these conditions:

(a) Cable Damage

Critical areas for wire breakage are sections of the cable which pass through fairleads and around pulleys. To inspect each section which passes over a pulley or through a fairlead, remove cable from aircraft to the extent necessary to expose that particular section. Examine cables for broken wires by passing a cloth along length of cable. This will clean the cable for a visual inspection, and detect broken wires, if the cloth snags on cable. When snags are found, closely examine cable to determine full extent of damage.

The absence of snags is not positive evidence that broken wires do not exist. Figure 2A shows a cable with broken wires that were not detected by wiping, but were found during a visual inspection. The damage became readily apparent (Figure 2B) when the cable was removed and bent using the techniques depicted in figure 4.14c.

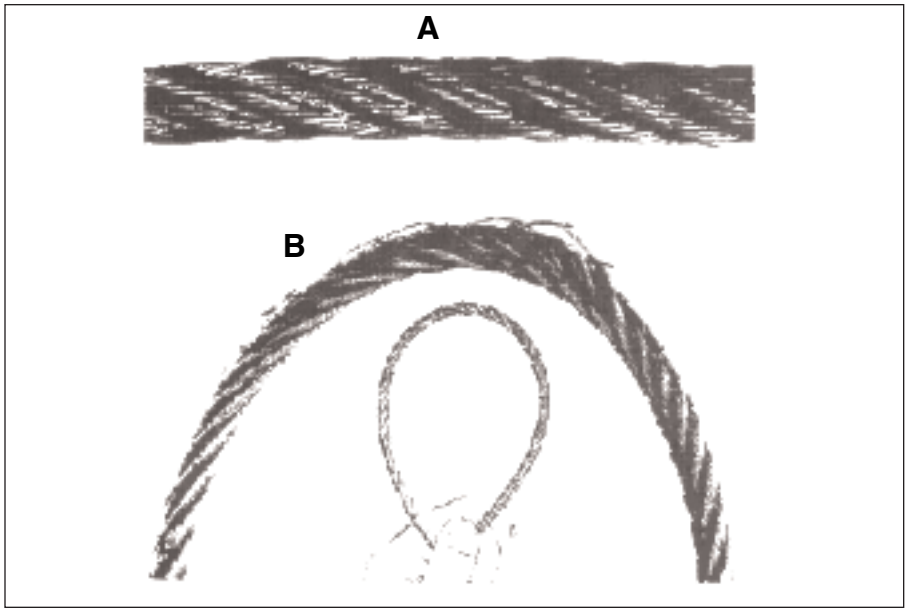

Control Cable Inspection Technique
Figure 2

FLIGHT CONTROLS (cont.)

(3) Control Cable Inspection (cont.)

(b) External Wear Patterns

Wear will normally extend along cable equal to the distance cable moves at that location. Wear may occur on one side of the cable only or on its entire circumference. Replace flexible and non-flexible cables when individual wires in each strand appear to blend together (outer wires worn 40-50 percent) as depicted in figure 3.

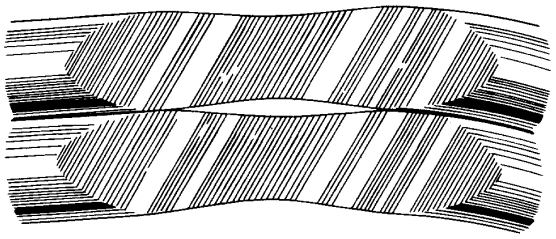

INDIVIDUAL OUTER WIRES WORN MORE TH AN 50%

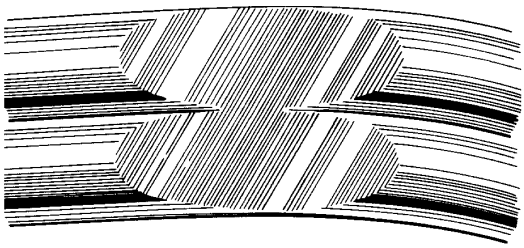

INDIVIDUAL OUTER WIRES WORN MORE THAN 40 – 50 % (NOTE BLENDING OF WORN AREAS)

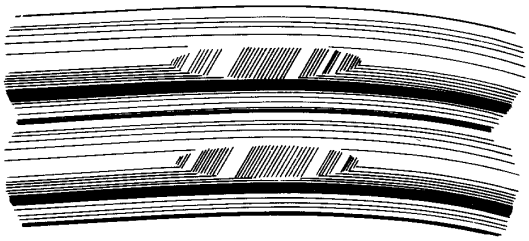

INDIVIDUAL OUTER WIRES WORN LESS THAN 40% (WORN AREAS INDIVIDUALLY DISTINGUISHABLE)

Cable Wear Patterns
Figure 3

FLIGHT CONTROLS (cont.)

(3) Control Cable Inspection (cont.)

(c) Internal Cable Wear

As wear is taking place on the exterior surface of a cable, the same condition is taking place internally, particularly in the sections of the cable which pass over pulleys and quadrants. This condition, shown in Figure 4, is not easily detected unless the strands of the cable are separated. Wear of this type is a result of the relative motion between inner wire surfaces. Under certain conditions the rate of this type wear can be greater than that occurring on the surface.

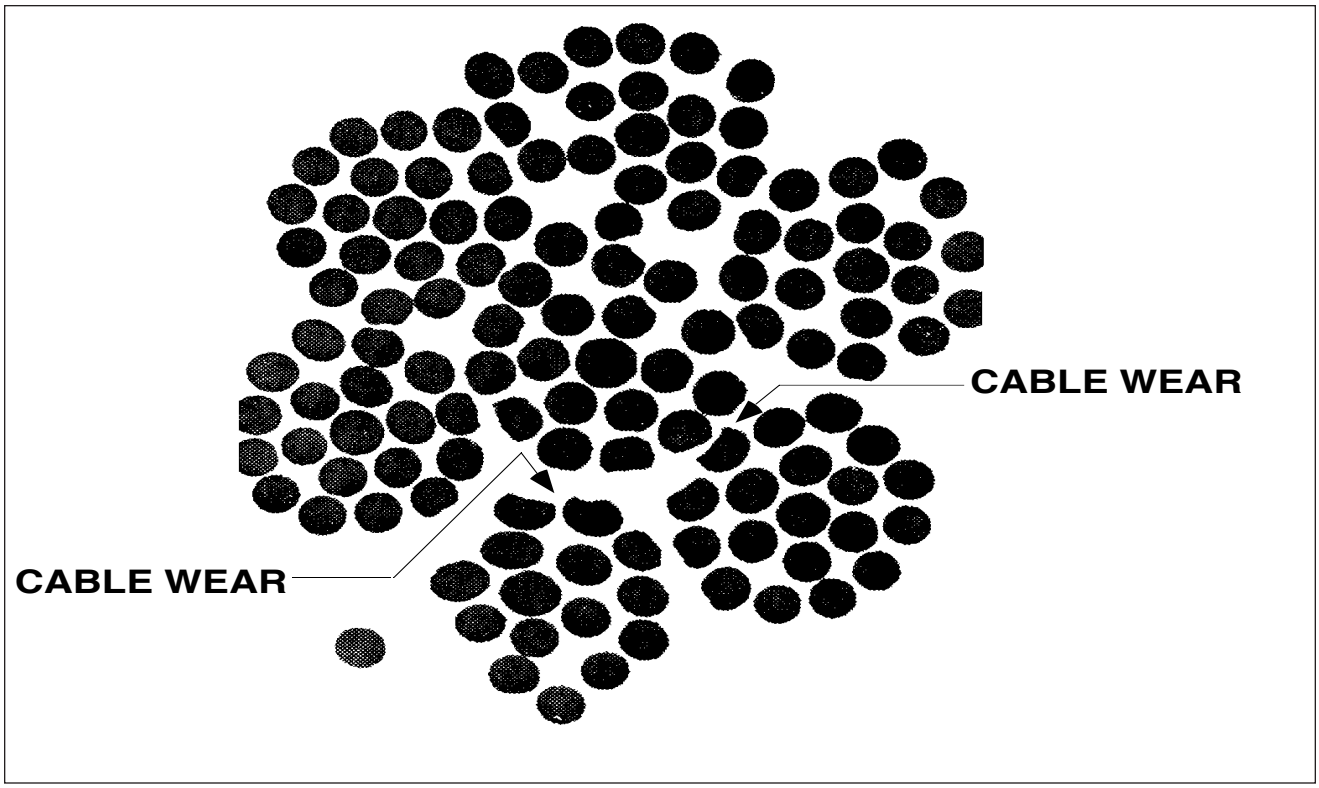

Internal Cable Wear
Figure 4

(d) Corrosion

Carefully examine any cable for corrosion that has a broken wire in a section not in contact with wear producing airframe components such as pulleys, fairleads, etc. It may be necessary to remove and bend the cable to properly inspect it for internal strand corrosion as this condition is usually not evident on the outer surface of the cable. Replace cable segments if internal strand rust or corrosion is found.

Areas especially conducive to cable corrosion are battery compartments, lavatories, wheel wells, etc., where concentrations of corrosive fumes, vapors, and liquids can accumulate.

FLIGHT CONTROLS (cont.)

(3) Control Cable Inspection

(d) Corrosion

– NOTE –

Check all exposed sections of cable for corrosion after a cleaning and/or metal-brightening operation has been accomplished in that area.

(4) Cable Maintenance

Frequent inspections and preservation measures such as rust prevention treatments for bare cable areas will help to extend cable service life. Where cables pass through fairleads, pressure seals, or over pulleys, remove accumulated heavy coatings of corrosion prevention compound. Provide corrosion protection for these cable sections by lubricating with a light coat of graphite grease or general purpose, low-temperature oil.

– CAUTION –

Avoid use of vapor degreasing, steam cleaning, methylethylketone (MEK) or other solvents to remove corrosion-preventative compounds, as these methods will also remove cable internal lubricant.

(5) Cable Fittings

Check swaged terminal reference marks for an indication of cable slippage within fitting. Inspect fitting assembly for distortion and/or broken strands at the terminal. Assure that all bearings and swivel fittings (bolted or pinned) pivot freely to prevent binding and subsequent failure. Check turnbuckles for proper thread exposure and broken or missing safety wires/clips.

(6) Pulleys

Inspect pulleys for roughness, sharp edges, and presence of foreign material embedded in the grooves. Examine pulley bearings to assure proper lubrication, smooth rotation, freedom from flat spots, dirt, and paint spray. Periodically rotate pulleys, which turn through a small arc, to provide a new bearing surface for the cable. Maintain pulley alignment to prevent the cable from riding on flanges and chafing against guards, covers, or adjacent structure. Check all pulley brackets and guards for damage, alignment, and security.

(a) Pulley Wear Patterns

Various cable system malfunctions may be detected by analyzing pulley conditions. These include such discrepancies as too much tension, misalignment, pulley bearing problems, and size mismatches between cables and pulleys. Examples of these conditions are shown in Figure 5.

FLIGHT CONTROLS (cont.)

(6) Pulleys (cont.)

(a) Pulley Wear Patterns (cont.)

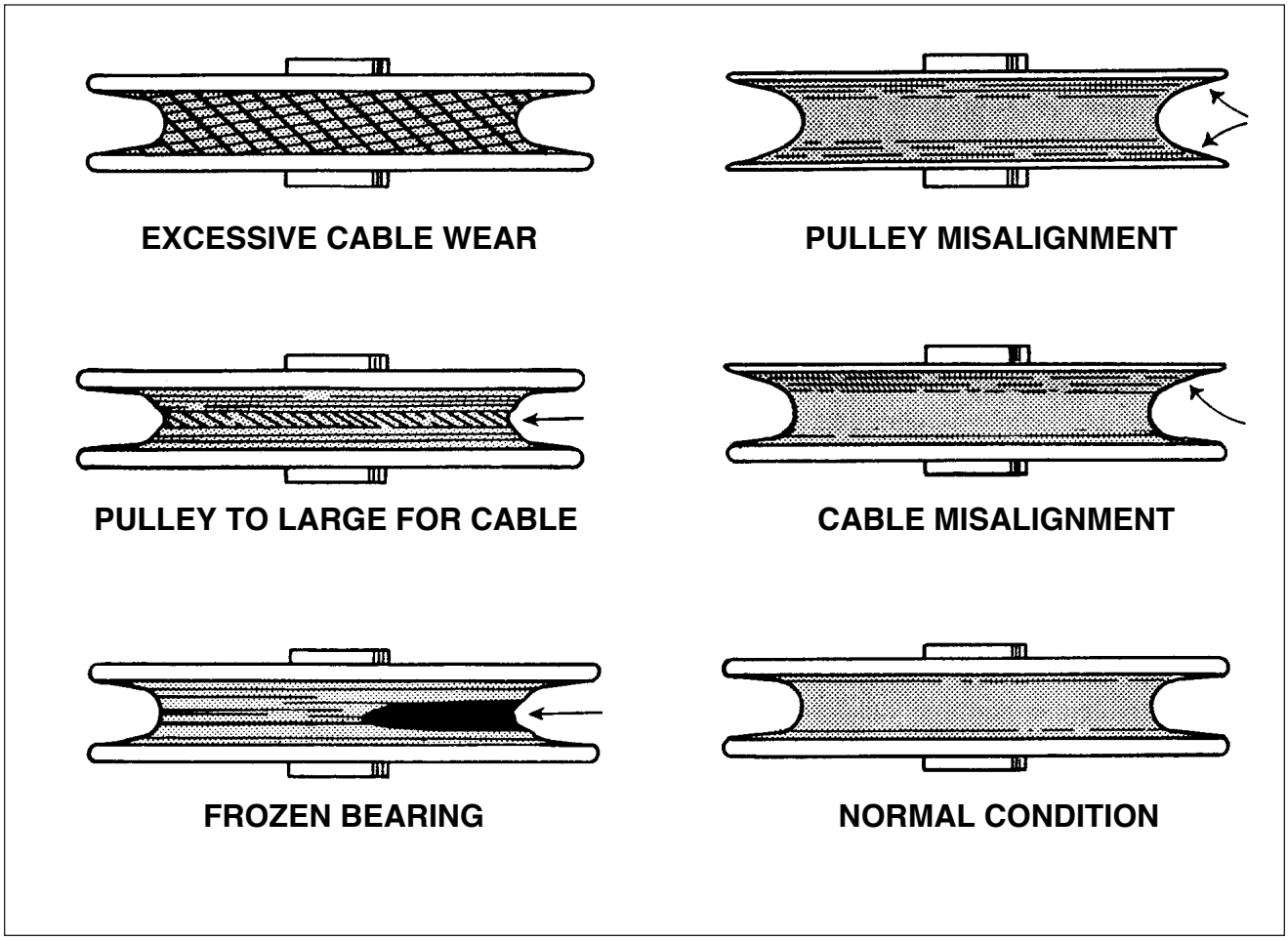

Pulley Wear Patterns
Figure 5

INTENTIONALLY LEFT BLANK

AILERON CONTROLS

A. Troubleshooting Aileron Control System

Chart 2
Troubleshooting Aileron Control System

Trouble	Cause	Remedy
Lost motion between control wheel and aileron.	Cable tension too low.	Adjust cable tension.
	Linkage loose or worn.	Check linkage and tighten or replace.
	Broken pulley.	Replace pulley.
	Cables not in place on pulleys.	Install cables correctly. Check cable guards.
Resistance to control wheel rotation.	System not lubricated properly.	Lubricate system.
	Cable tension too high.	Adjust cable tension.
	Control column horizontal chain improperly adjusted.	Adjust chain tension.
	Pulleys binding or rubbing.	Replace binding pulleys and/or provide clearance between pulleys and brackets.
	Cables not in place on pulleys.	Install cables correctly. Check cable guards.
	Bent aileron and/ or hinge.	Repair or replace aileron and/or hinge.
	Cables crossed or routed incorrectly.	Check routing of control cables.
Control wheels not synchronized.	Incorrect control column rigging.	Rerig control column.
Control wheels not horizontal when ailerons are neutral.	Incorrect rigging of aileron system.	Rerig aileron system.
Incorrect aileron travel.	Aileron control rods not adjusted properly.	Adjust control rods.
	Aileron bellcrank stops not adjusted properly.	Adjust bellcrank stops.

AILERON CONTROLS (cont)

A. Troubleshooting Aileron Control System (cont)

Chart 2 (cont)
Troubleshooting Aileron Control System (cont)

Trouble	Cause	Remedy
Correct aileron travel cannot be obtained by adjusting bellcrank stops.	Incorrect rigging of aileron cables, control wheel and control rod.	Rerig controls.
Control wheel stops before control surfaces reach full travel.	Incorrect rigging between control wheel and control cables.	Rerig controls.

B. Control Column Removal (Refer to Figure 6.)

(1) To remove either control wheel and tube:
   (a) Separate the control wheel tube from the flexible joint that is located on either side of the tee bar assembly by removing the nut, washer and bolt. Pull the tube from the flexible joint.
   (b) If removing the left control tube, slide the stop from the tube.
   (c) Should wires for the various Autopilot systems be installed in the control tube, disconnect them at the quick disconnect terminals behind the instrument panel. Draw the wires back into the tube and back out through the forward end of the tube.
   (d) Remove the control wheel assembly from the instrument panel.

(2) To remove tee bar with assembled parts:
   (a) Remove access panel to aft section of the fuselage.
   (b) Relieve cable tension from stabilator control cables at one of the stabilator cable turnbuckles in the aft section of fuselage.
   (c) Relieve tension from aileron control cables and chains at turnbuckle that connects the chains at the top of the tee bar.
   (d) Disconnect control chains from control cables where chains and cables join by removing cotter pins, nuts, bolts and bushings.
   (e) If control wheel assemblies have not been previously disconnected from tee bar assembly, separate control wheel tubes at the flexible joints by removing nuts, washers and bolts.
   (f) Remove tunnel plate just aft of the tee bar by laying back enough tunnel carpet to remove plate attachment screws.
   (g) Remove the two aileron control cable pulleys attached to lower section of tee bar by removing pulley attachment bolt.
   (h) Disconnect stabilator control cables from lower end of tee bar assembly.
   (i) Disconnect necessary engine control cables, such as the propeller pitch control, mixture control, etc., to allow tee bar assembly to be removed.
   (j) Remove tee bar assembly by removing attachment bolts with washers and nuts that are through each side of the floor tunnel, and lifting it up and out through the right side of the cabin.

AILERON CONTROLS (cont)

B. Control Column Removal (Refer to Figure 6.) (cont)

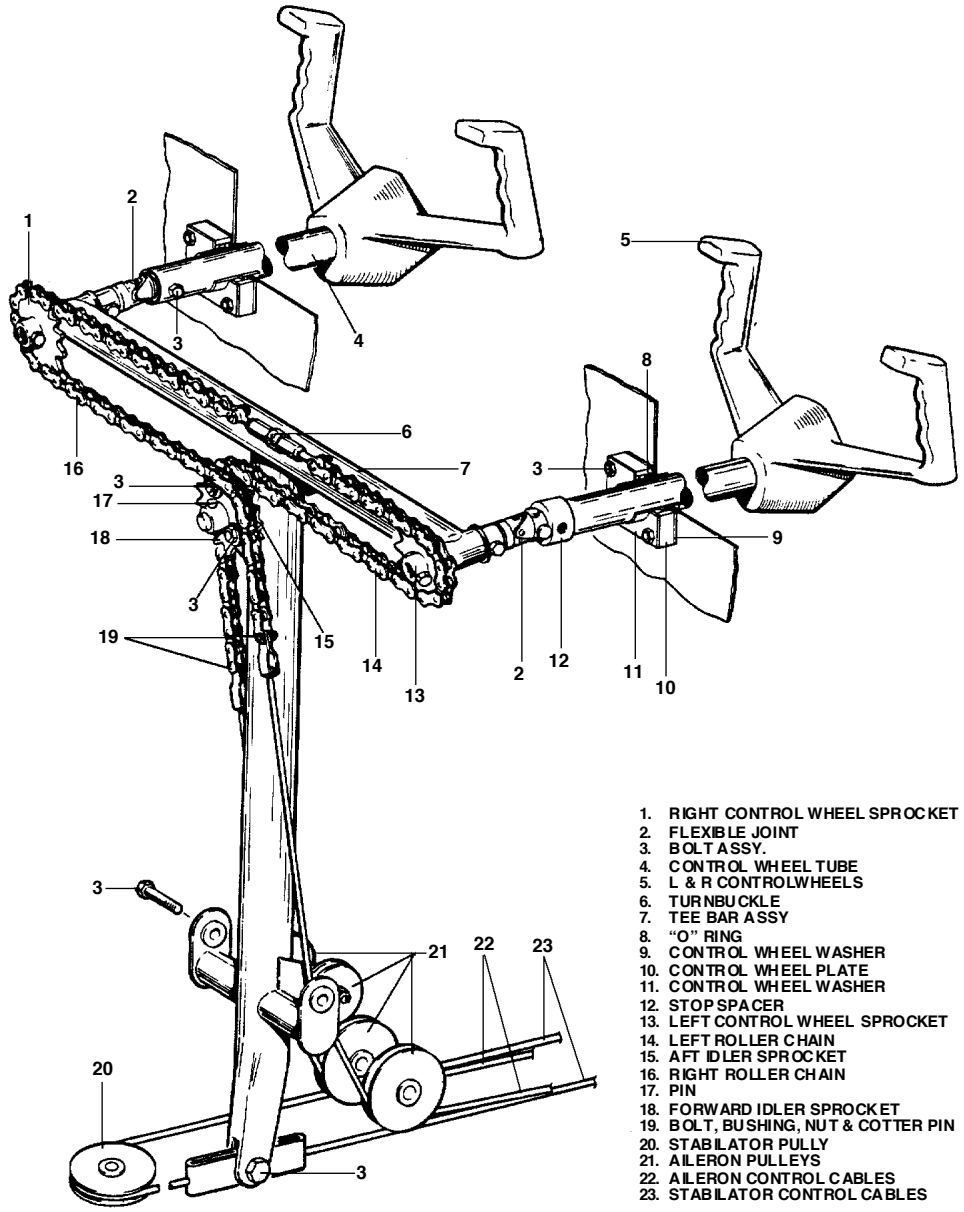

Control Column Assembly
Figure 6

AILERON CONTROLS (cont)

C Control Column Installation

(1) To install of tee bar assembly (Refer to Figure 6.)
   (a) Swing the tee bar assembly into place from the right side of the cabin and secure with attachment bolts, washers and nuts inserted through each side of the floor tunnel.
   (b) Connect the stabilator control cables to the lower end of the tee bar with bolt, washer, nut and cotter pin. Allow the cable ends free to rotate.
   (c) Place the aileron control cables around the pulleys that attach to the lower section of the tee bar; position pulleys and secure with bolt, washers and nut.
   (d) Install the control wheel per Step 2.
   (e) Place the control wheels in neutral (centered) position and install the aileron control chains on the control wheel sprockets and idler cross-over sprockets. The turnbuckle must be centered between the two control wheel sprockets.
   (f) Loosen the connecting bolts of the idler sprockets to allow the chain to fit snug around the control wheel sprockets and over the idler sprockets.
   (g) Connect the aileron control cables to the ends of the chains with bolts, bushings, nuts and cotter pins.
   (h) Adjust the chain turnbuckle between the two control wheel sprockets to allow the control wheels to be neutral and obtain proper cable tension as given in Figure 7. It may be necessary in order to have both control wheels neutral to set the chain turbuckle to neutralize the wheels and then set cable tension with the turnbuckles located under the floor panel aft of the main spar. Before safetying the turnbuckle, check that when the ailerons are neutral, the control wheels will be neutral and the chain turnbuckle centered. Also the aileron bellcranks should contact their stops before the control wheel hits its stop. Maintain 0.030 to 0.040 inch clearance between sprocket pin and adjustable stop bolts on models having adjustable tee bar stops.
   (i) Set stabilator cable tension with the turnbuckle in the aft section of the fuselage. Check safety of all turnbuckles upon completion of adjustments.
   (j) Tighten the connecting bolts of the idler sprockets.
   (k) Install the floor tunnel plate and secure with screws. Fasten the tunnel carpet in place.

(2) To install either control wheel assembly (Refer to Figure 6.)
   (a) Insert the control wheel tube through the instrument panel.
   (b) Should wires for the various Autopilot systems need to be installed in the control tube, route them through the hole in the forward side of the tube and out of the small hole in the side. Position the rubber grommet in the hole in the side of the tube.
   (c) On the left control tube, install the stop.
   (d) Connect the control wheel tube to the flexible joint of the tee bar assembly. If the control cables and/or chains have not been removed or loosened, place the ailerons in neutral and install the control tube on the flexible joint to allow the control wheel to be neutral. Install bolt, washer and nut and tighten.

(3) To Install Flex Joint Replacement (Refer to Figures 6 and 7)
   (a) Carefully lay out location for hole to be drilled in flex joint tube to match hole in control cloumn shaft.
   (b) Using a #5 (0.2055) drill bit, drill hole through flex joint tube at location determined in paragraph (a).

AILERON CONTROLS (cont)

C Control Column Installation (cont)

(3) To Install Flex Joint Replacement (Refer to Figure 6 and 7) (cont)

(c) Ream drilled hole, in steps, with a #1 reamer, checking to insure proper depth for taper pin and sufficient pin thread protrusion for proper installation.

– NOTE –

Reamer may be purchased from Enstice Tool Co., Palm Bay, Florida.

(d) Install pin through tube and shaft.
1 If pin shoulder does ***not*** protruded past tube surface, install a AN960-10 washer
2 If pin shoulder ***does*** protruded past tube surface, install a MS20364-1032C washer

(e) Install nut. Torque 35 - 40 inch-pounds.

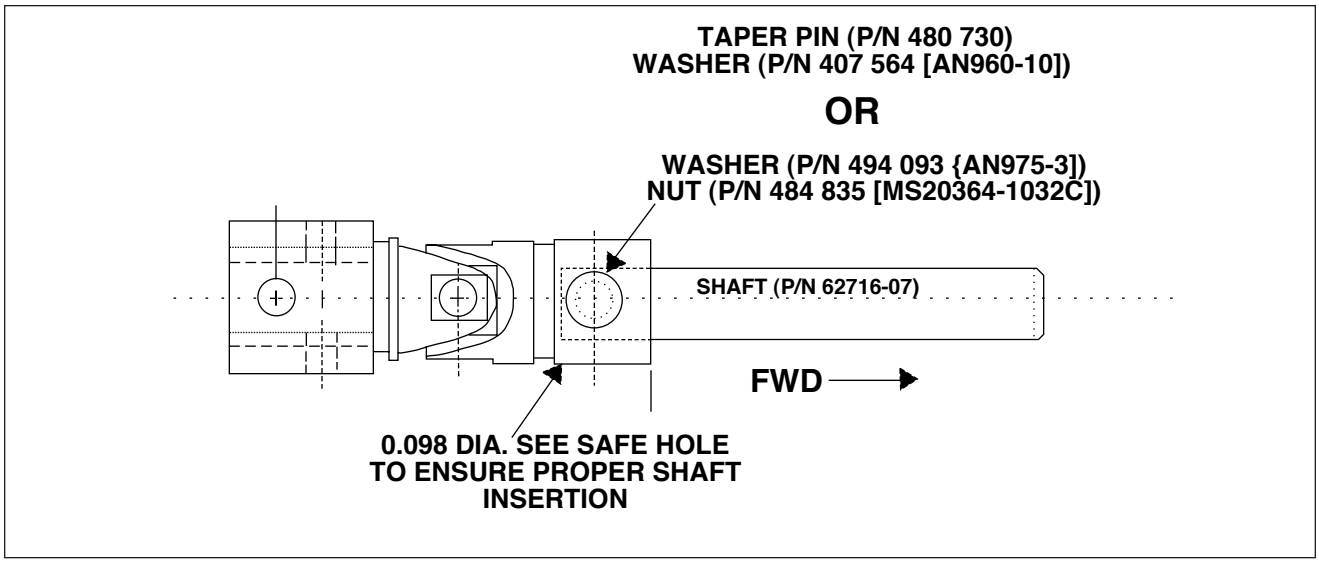

Flex (Universal) Joint Assembly
Figure 7

D. Aileron Control Cables Removal (Refer to Figure 8)

(1) To remove any of the control cables in the fuselage or either wing:

(a) Remove center seats and seat belt attachments

(b) Remove screws securing floor panel located directly aft of the main spar. Lift panel and remove from airplane.

(c) Remove tunnel plate just aft of the tee bar by laying back enough tunnel carpet to remove plate attachment screws.

(d) Remove forward heat duct from side of floor tunnel from which the cable is to be removed by removing trim control wheel cover, heater baffles from side of duct, floor carpet and the duct attachment screws.

AILERON CONTROLS (cont)

D. Aileron Control Cables Removal (Refer to Figure 8) (cont)

(1) To remove any of the control cables in the fuselage or either wing: (cont)

(e) Separate primary control cable at turnbuckle located in floor opening aft of main spar.

(f) Remove cable pulleys attached to lower section of control column tee bar assembly by removing pulley attachment bolt.(g) Move cable guard located under pulley cluster below the fuel selector by removing cotter pin from exposed end of guard and sliding it to the left or right as required.

(h) Remove the cotter pins used as cable guards at the pulley in the forward area of the floor opening aft of the main spar.

(i) Disconnect the cable from the control chain at the control column tee bar assembly by removing the cotter pin, nut, bolt and bushing that connect the two together. Secure the chains in some manner to prevent them from unwrapping from around the sprockets.

(j) Draw the cable back through the floor tunnel.

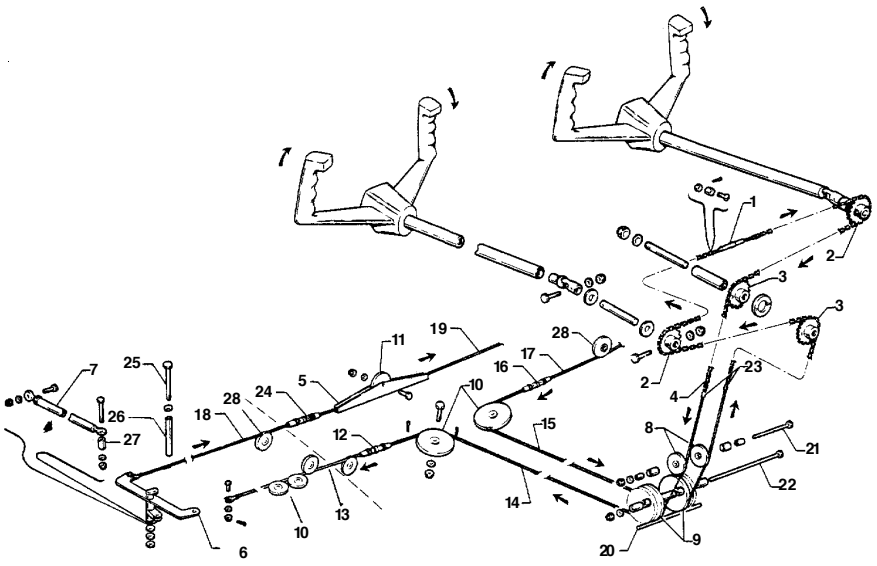

Aileron Controls
Figure 8

AILERON CONTROLS (cont)

D. Aileron Control Cables Removal (Refer to Figure 8) (cont)
   (3) To remove primary control cable in either wing:
      (a) Remove the access plate to the aileron bellcrank located on the underside of the wing forward of the inboard end of the aileron.
      (b) If not previously disconnected, separate the cable at the turnbuckle located in the floor opening aft of the main spar.
      (c) Disconnect the pulley guard pin from pulley.
      (d) Disconnect the cable from the forward end of the aileron bellcrank by removing the cotter pin, nut, washer and bolt.
      (e) Draw the cable from the wing.
   (4) To remove either balance cable:
      (a) Separate the balance cable at the turnbuckle in the right side of the floor opening aft of the main spar.
      (b) If the left balance cable is to be removed, remove the cotter pin used as a cable guard at the pulley in the center of the floor opening.
      (c) Remove the access plate to the aileron bellcrank located on the underside of the wing forward of the inboard end of the aileron.
      (d) Disconnect the cable from the aft end of the aileron bellcrank by removing the cotter pin, nut, washer and bolt.
      (e) Draw the cable from the wing

E. Aileron Control Cables Installation (Refer to Figure 8)
   (1) To install left or right primary control cable:
      (a) Draw cable through fuselage floor tunnel.
      (b) Connect cable to the end of control chain and secure using bushing, bolt, nut and cotter pin.
      (c) Place cable around pulley located in the tunnel below the fuel selector.
      (d) Position cables and install cable pulleys that attach to lower section of tee bar assembly. Secure with bolt, washer and nut.
      (e) Place the cable around pulley located in floor opening just aft of main spar.
      (f) If primary control cable in the wing is already installed, connect control cable ends at turnbuckle located in floor opening aft of main spar.
      (g) Check rigging and adjustment per Rigging and Adjustment of Aileron Controls.
      (h) Position heat duct and secure with screws.
      (i) Install tunnel plate aft of tee bar assembly and secure with screws.
      (j) Put floor carpet in place and secure.
      (k) Install lower and upper selector covers and secure with screws.
      (l) Place fuel selector knobs in place and secure with set screws.
   (2) To install primary control cable in left or right wing:
      (a) Draw control cable into wing.
      (b) Connect cable to the forward end of aileron bellcrank using a bolt, washer, nut and cotter pin. Allow cable end to rotate freely on bellcrank.
      (c) If primary control cable is already installed in fuselage, connect ends at turnbuckle located under rear seat aft of main spar.
      (d) Check rigging and adjustment per Rigging and Adjustment of Aileron Controls.
      (e) Install access plate on underside of wing.

AILERON CONTROLS (cont)

E. Aileron Control Cables Installation (Refer to Figure 8) **(cont)**

(3) To install left or right balance cable:
(a) Draw the cable into wing.
(b) Connect cable to the aft end of aileron bellcrank using a bolt, washer, nut and cotter pin. Allow the cable end to rotate freely on bellcrank.
(c) Connect balance cable ends at turnbuckle located under rear seat aft of main spar.
(d) If left cable was removed, install cotter pin cable guard at pulley located within fuselage aft of main spar.
(e) Check rigging and adjustment per Rigging and Adjustment of Aileron Controls.
(f) Install access plate on the underside of wing.
(4) Install floor panel, seat belt attachments, rear seat and two front seats.
Assembly Removal (Refer to Figure 8.)

F. Aileron Bellcrank Assembly Removal (Refer to Figure 8.)

(1) Remove rear seat and floor panel.
(2) Remove access plate to aileron bellcrank located on underside of wing, forward of inboard end of aileron.
(3) Relieve aileron control cables tension by loosening balance cable turnbuckle located in opening aft of main spar.
(4) Disconnect primary and balance control cables from bellcrank assembly by removing cotter pins, nuts, washers and bolts.
(5) Disconnect aileron control rod at aft or forward end, as desired, by removing the cotter pin, nut, washer and bolt.
(6) Remove nut, pivot bolt and washers that secure bellcrank. The nut is visible from underside of wing.
(7) Remove bellcrank from within wing.

G. Aileron Bellcrank Assembly Installation (Refer to Figure 8.)

(1) Ensure that bellcrank pivot bushing is lubricated. Install pivot bushing in torque tube portion of bellcrank.
(2) Place bellcrank in position in wing with a washer located between each end of torque tube and mounting brackets.
(3) Install bellcrank pivot bolt with head up. Install a washer and nut on bolt. Torque nut 20 to 25 inch-pounds. Check that bellcrank rotates freely with little up-down play.
(4) Install and adjust control rod. Check aileron travel per Rigging and Adjustment of Aileron Controls.
(5) Connect ends of primary and balance control cables to bellcrank using bolts, washers, nuts and cotter pins. Allow cable ends to rotate freely on the bellcrank.
(6) Tighten control cables at balance cable turnbuckle in floor opening aft of main spar. Check cable tension per Rigging and Adjustment of Aileron Controls.
(7) Install access plate on underside of wing.
(8) Install floor panel, seat belt attachments and seats.

AILERON CONTROLS (cont)

H. Aileron Controls Rigging and Adjustment. (Refer to Figures 9 and 10)

—NOTE—

Flap adjustment must be completed before starting aileron adjustment.

(1) To check and adjust rigging of aileron controls:
   (a) Determine that control chains have been rigged per Control Column Assembly Installation.
   (b) Set the right and left aileron bellcranks at neutral position by:
      1 Removing access plate to each aileron bellcrank located on underside of wing, forward of inboard end of aileron, by removing plate attaching screws.
      2 Affix a bellcrank rigging tool between the forward arm of each bellcrank and the adjacent rib as shown in Figure 9. (Tool may be fabricated from dimensions given in Chapter 95.)
         a Slotted end of the tool fits on bellcrank arm forward of and adjacent to the primary control cable end.
         b Position other end of the tool so that side of tool contacts aft side of bellcrank stop. Bellcrank must be moved to allow a snug fit of tool between bellcrank arm and rib. It may be necessary to loosen a primary control cable or balance cable.
         c Neutral position of bellcrank is position at which forward and aft cable connection holes are an equal distance from adjacent outboard wing rib.

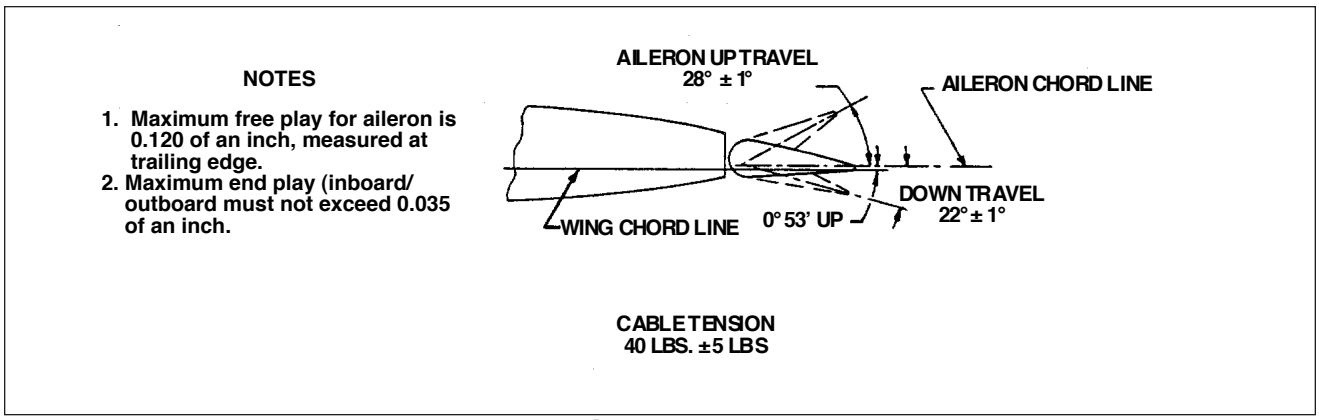

Aileron Rigging
Figure 9

   (c) With each bellcrank set at neutral, the ailerons may be checked and adjusted for neutral as follows:
      1 Ensure that bellcrank rigging tool fits snug between bellcrank and rib.
      2 Place an aileron rigging tool, as shown in Figure 11, against underside of the wing and aileron as close as possible to inboard end of aileron without contacting any rivets. Tool must be positioned parallel with wing ribs, with aft end of the tool even with trailing edge of the aileron. (Tool may be fabricated from dimensions given in Chapter 95.)

AILERON CONTROLS (cont)

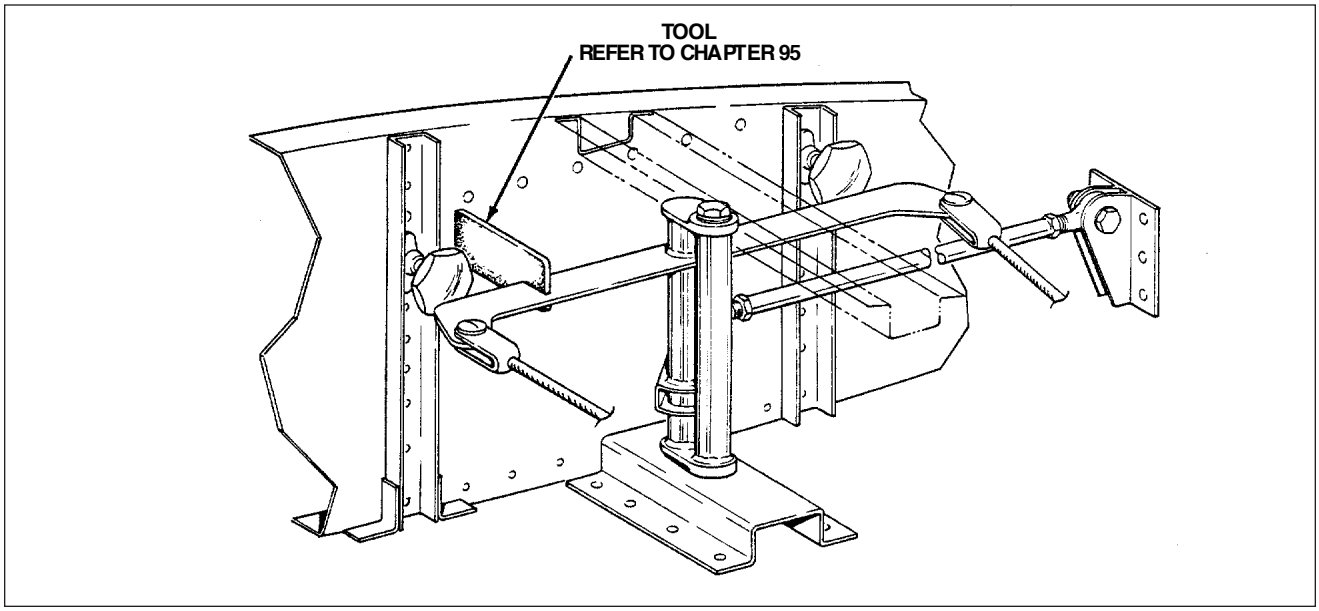

Bellcrank Rigging Tool
Figure 10

(c) With each bellcrank set at neutral, the ailerons may be checked and adjusted for neutral as follows (cont.):

3 With aileron control rod connected between bellcrank and aileron:

a Check that surface of the wing contacts tool at its forward surface and at spacer.

b Check that trailing edge of flap contacts aft end of the tool. The aileron is neutral at this position.

4 Should the three points not contact, loosen jam nut at the aft end of control rod and rotate rod until the three points contact. While making this adjustment, apply a slight up pressure against trailing edge of aileron. After adjustment, tighten jam nut.

(2) To adjust primary and balance cable tension, as given in Figure 9:

(a) Remove the two front seats if desired, the rear seat and floor panel to facilitate in the necessary operation .

(b) Loosen connecting bolts of idler cross-over sprockets at control tee bar to allow chain to fit snug around control wheel sprockets and over idler sprockets.

(c) Ensure both bellcranks are at neutral position.

(d) Adjust turnbuckles of primary and balance cables, located in access opening just aft of main spar, to proper tension. Maintain neutral-center position of control wheels. To obtain neutral position of both control wheels, it may be necessary to adjust roller chain turnbuckle located between the control wheel sprockets. During adjustment, apply a little more tension on primary control cables to hold bellcranks in neutral position against rigging tools.

(e) When adjustment is complete there should be even tension on all cables.

(f) Tighten the bolts to secure the idler cross-over sprockets.

(g) Remove the aileron bellcrank rigging tool from each wing.

(3) Aileron Tab (PA-32R-301 II HP only)

A fixed trim tab is located on the trailing edge of the left aileron. The tab is ground adjustable only.

AILERON CONTROLS (cont)

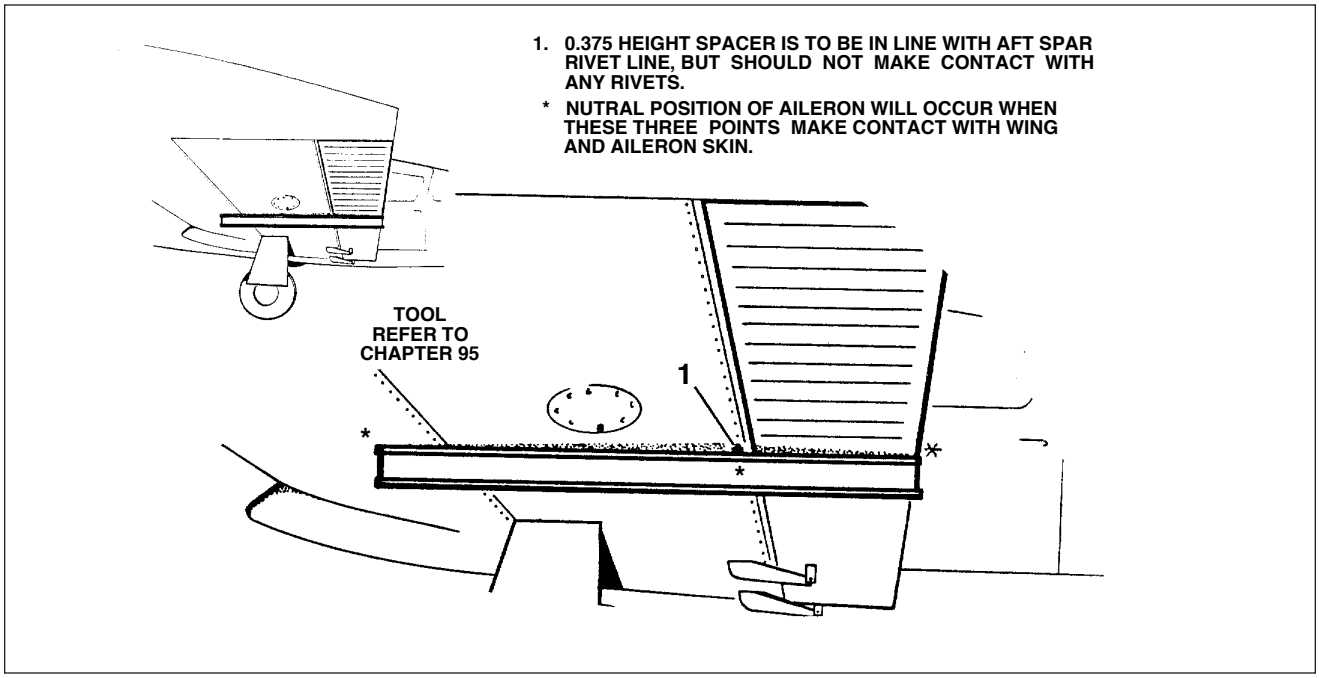

Aileron Rigging Tool
Figure 11

(4) Check ailerons for correct travel from neutral per dimensions given in Figure 9 by the following procedure:
   (a) Center bubble of a protractor over surface of either aileron at neutral position. Note reading.
   (b) Move aileron full up and down. Check degree of travel in each direction. Degree of travel on protractor is determined by taking the difference between protractor reading at neutral and up, and neutral and down. Bubble must be centered at each reading.
   (c) If travel is not correct, set by rotating bellcrank stops in or out. Stops are attached to wing rib adjacent to aileron bellcrank.
   (d) Repeat procedure for other aileron.
   (e) Check the bellcrank stops to assure that the bellcrank contact is made simultaneously, but still have cushion before contacting the control wheel stops. Maintain 0.030 to 0.040 clearance between sprocket pin and adjustable stop bolts on models having adjustable tee bar stops.
   (f) Check complete system for operation and safety for turnbuckles, bolts, etc., install all pulley guard pins.
   (g) Install access plates and panels.

– NOTE –

When an out of trim condition persists despite all the rigging corrections that can be made, there is a possibility that the trailing edge of the aileron has been used to move the aircraft forward. This can result in a slight bulging of the aileron contour at the trailing edge which will cause an out of rig condition that is very difficult to correct.

RUDDER AND TRIM CONTROLS.

A. Troubleshooting Rudder Control System

Chart 3
Troubleshooting Rudder Control System

Trouble	Cause	Remedy
Lost motion between rudder pedals and rudder.	Cable tension too low.	Adjust cable tension.
	Linkage loose or worn.	Check linkage and tighten or replace.
	Broken pulley.	Replace pulley.
	Bolts attaching rudder to bellcrank are loose.	Tighten bellcrank bolts.
Excessive resistance to rudder pedal movement.	System not lubricated properly.	Lubricate system.
	Rudder pedal torque tube bearing in need of lubrication.	Lubricate torque tube bearings.
	Cable tension too high.	Adjust cable tension.
	Pulleys binding or rubbing.	Replace binding pulleys and or provide clearance between pulleys and brackets.
-	Cables not in place on pulleys.	Install cables correctly. Check cable guards.
	Cables crossed or routed incorrectly.	Check routing of control cables.
Rudder pedals not neutral when rudder is streamlined.	Rudder cables incorrectly rigged.	Rerig rudder cables.
Incorrect rudder travel.	Rudder bellcrank stop incorrectly adjusted.	Rerig bellcrank stops.
	Nose wheel contacts stops	Rerig nose wheel stops. before rudder.
Trim control knob moves with excessive resistance.	System not lubricated properly.	Lubricated system.

RUDDER AND TRIM CONTROLS. (cont)

B. Rudder Cables Removal (Refer to Figure 12.)

(1) To remove either forward rudder cable :
- (a) Remove access panel to aft section of fuselage.
- (b) Disconnect desired cable at turnbuckle in aft section of fuselage.
- (c) Remove tunnel cover in the aft area of cabin by removing carpet over the tunnel and cover attachment screws.
- (d) Remove cable guard plate from underside of pulley cluster located in aft area of floor tunnel, by removing guard attachment screws.
- (e) Remove floor panel located directly aft of main spar by removing center seats, seat belt attachments and screws securing floor panel. Lift panel and remove from airplane.
- (f) From within area of floor opening, remove cable rub blocks attached to spar housing by removing block attachment screws.
- (g) Remove cable guard pin at pulley cluster in aft area of opening by removing cotter pin from one end of the guard.
- (h) Remove fuel selector panel cover by removing rudder trim knob and cover attachment screws.
- (i) Remove lower fuel selector cover and fuel selector control lever by removing attachment pin at bottom of lever that holds lever on selector torque tube.
- (j) Remove tunnel plate just aft of tee bar by removing enough carpet from tunnel to allow plate attachment screws and plate to be removed.
- (k) Remove forward head duct from one side of the floor tunnel from which control cable is to be removed.)
- (l) Move cable guard pin located under pulley cluster and below fuel selector by removing cotter pin from exposed end and sliding it to the left or right as required.
- (m) Disconnect the end of cable from arm on rudder pedal torque tube by removing cotter pin, nut, washer and bolt.
- (n) Draw the cable from floor tunnel.

(2) To remove either aft rudder control cable :
- (a) Remove access panel to aft section of fuselage.
- (b) Remove tail cone by removing its attachment screws.
- (c) Disconnect desired cable at turnbuckle in aft section of fuselage.
- (d) Disconnect cable from rudder horn by removing cable clevis bolt, bushing, washer and nut.
- (e) Draw the cable through the fuselage.

C. Rudder Cables Installation (Refer to Figure 12

(1). To install forward rudder control cables:

– NOTE –

Aft control cable(s) must be installed before installing forward cable(s). Refer to paragraph C, 2.

- (a) Draw control cable through floor tunnel.
- (b) Connect end of cable to arm on rudder pedal torque tube by installing bolt, washer, nut and cotter pin. Ensure cable end is free to rotate.

RUDDER AND TRIM CONTROLS. (CONT)

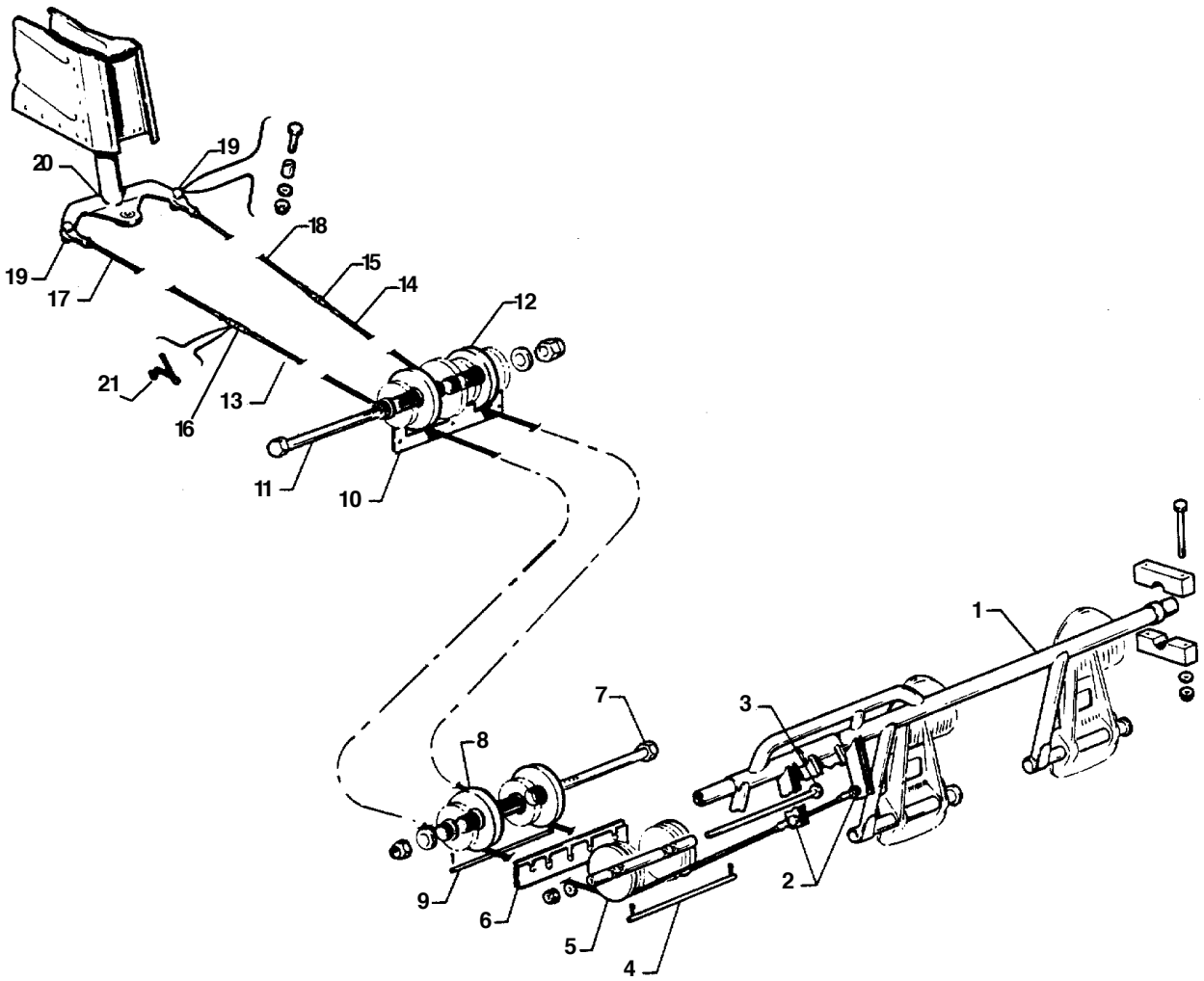

Rudder Controls
Figure 12

RUDDER AND TRIM CONTROLS. (cont)

(1). To install forward rudder control cables (cont):
- (c) Connect forward cable to aft control cable at turnbuckles in aft section of fuselage. Ensure each cable is in the groove of its pulley.
- (d) Move cable guard, located in forward tunnel under pulley cluster and below the fuel selector, into position, and secure with cotter pin.
- (e) Install cable guard blocks, located within floor opening aft of main spar, onto spar housing. Secure with screws,
- (f) Install cable guard pin at pulley cluster in aft area of floor opening by sliding it into position and fastening with a cotter pin.
- (g) Install cable guard plate under pulley cluster located in aft area of aft floor tunnel. Secure with screws.
- (h) Set cable tension and check rigging adjustment per Rigging and Adjustment of Rudder Controls.
- (i) Install heat duct. Secure with screws.
- (j) Install forward tunnel plate aft of tee bar. Secure with screws.
- (k) Put floor carpet in place and secure.
- (l) Place fuel selector lever on selector torque tube. Secure with pin and cotter pin.
- (m) Install lower and upper selector covers. Secure with screws.
- (n) Install floor panel and seat belt attachment aft of main spar. Secure panel with screws.
- (o) Install seats.
- (p) Install cover and carpet of aft floor tunnel.

(2) To install aft rudder control cable:
- (a). Position control cable(s).(Refer to Figure 12)
- (b) Connect cable(s) at turnbuckle(s) in aft section of fuselage.
- (c) Connect cable to rudder horn with clevis bolt, bushing, washer and nut.
- (d) Set cable tension and check rigging adjustment per Rigging and Adjustment of Rudder Controls.
- (e) Install tail cone and secure with screws.
- (f) Install the access panel to the aft section of the fuselage.

D. Rigging and Adjustment of Rudder Controls

1. To check and set correct degree of rudder travel:
   - (a) Check rudder travel by swinging rudder until it contacts its stop. If control cables are connected, rudder pedals must be used to swing rudder .
   - (b) With rudder against either left or right stop, place a rigging tool against side of the rudder and vertical stabilizer as shown in Figure 13. (Be sure tool is not contacting any rivets.) If no gap exists between rigging tool and surfaces of the rudder and vertical stabilizer, rudder stop for that direction of travel is correct. (Refer to Figure 15.) (Tool may be fabricated from dimensions given in Chapter 95.)
   - (c) Swing the rudder in the other direction and check travel as directed in Step (b)
   - (d) Should rudder travel be incorrect (indicated by showing a gap between tool and any part of control surface), remove tail cone fairing and the reset stops to obtain correct rudder travel . (Refer to Figures 14 and 15.)

RUDDER AND TRIM CONTROLS. (cont)

D. Rigging and Adjustment of Rudder Controls (cont)

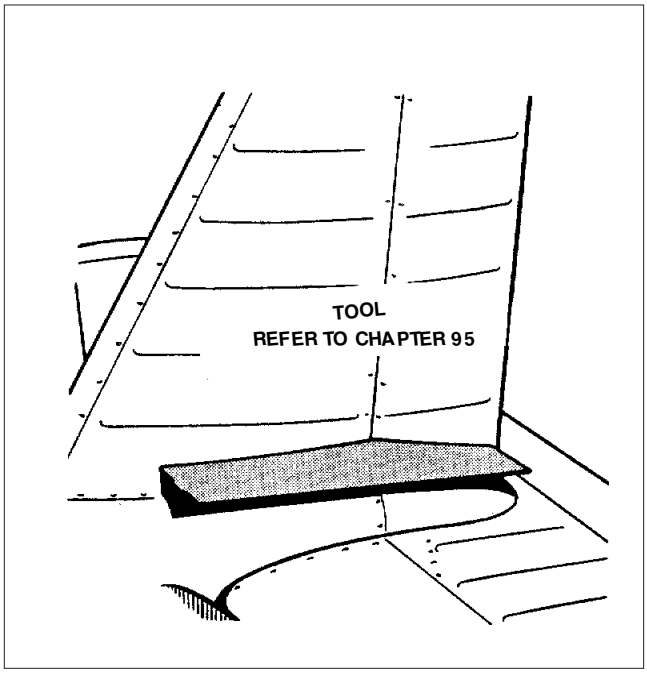

Rudder Rigging Tool
Figure 13

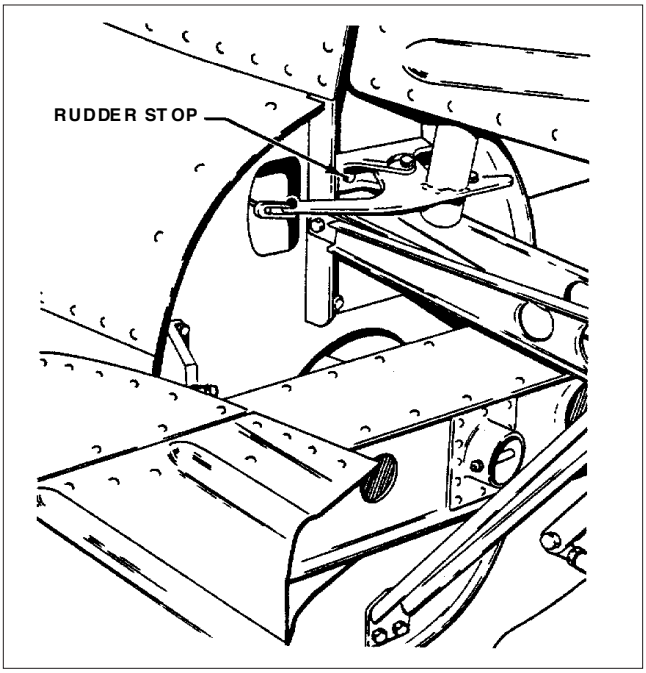

Rudder Travel Adjustments
Figure 14

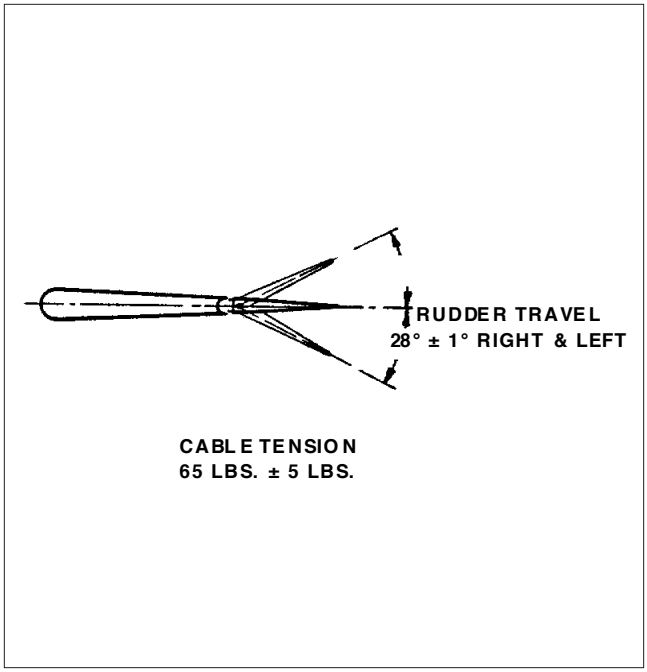

Rudder Rigging
Figure 15

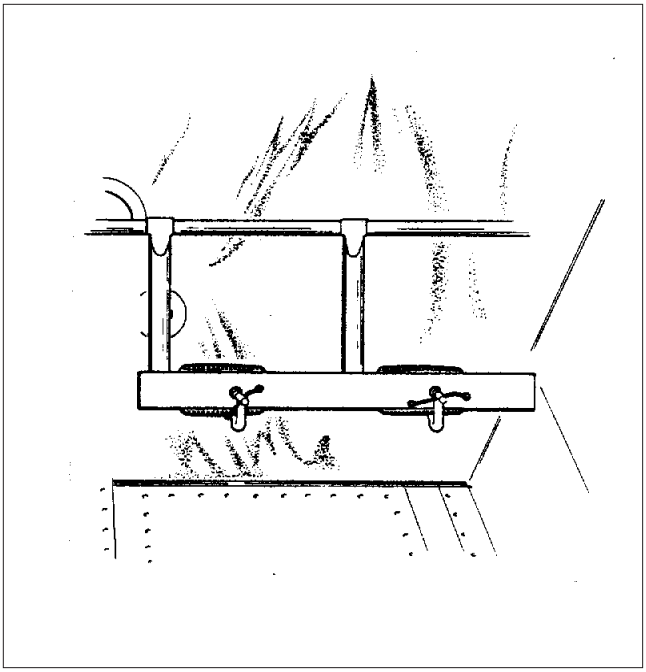

Clamping Rudder Pedals
Figure 16

RUDDER AND TRIM CONTROLS. (cont)

D. Rigging and Adjustment of Rudder Controls (cont)

(2) To set cable tension and align rudder:
(a) Remove tail cone and fuselage aft access panel.
(b) Check that nose gear steering has been aligned.
(c) Clamp rudder pedals together in neutral position. (Refer to Figure 16 and Alignment of Nose Landing Gear, Chapter 32.)
(c) Adjust turnbuckles in aft section of fuselage to obtain proper cable tension and to allow rudder to align at neutral position.
(d) Check safety of turnbuckles.

– CAUTION –

To avoid cable stretch, do not push rudder harder than necessary .

(e) Adjust rudder pedal stops by pushing on pilot's left rudder pedal until rudder stop is contacted.
1 Adjust pedal stop (on fire wall) to provide 0.06 to 0.120 of an inch clearance.
2 Repeat procedure with the copilot's right rudder pedal.
(f) Install tail cone and fuselage aft access panel.

E. Rudder Trim Control.

(1) To remove Rudder Trim Control (Refer to Figure 17.)
(a) Remove fuel selector panel cover by removing rudder trim knob and cover attachment screws.
(b) Place trim knob on assembly and rotate to extreme left (counterclockwise) trim position.
(c) Disconnect housing lug from arm on rudder pedal torque tube by removing cotter pin, nut, washer and bolt.
(d) Remove threaded bushing from aft end of mounting channel by removing cotter pin and clevis pin.
(e) Remove mounting channel may by removing channel attachment screws inside of channel.
1 Middle and aft screws need only be turned out.
2 Forward screw is secured by a nut on underside of tunnel. To remove forward screw
a lift floor carpet on right side of tunnel adjacent to channel and remove access plate on side of tunnel.
b Secure nut and turn out screw.
(2) To Install Rudder Trim Control. (Refer to Figure 17.)
(a) Install trim control mounting channel on upper side of floor tunnel. (A spacer plate is installed between channel and the tunnel.)
1 Install the middle and aft attachment screws. These screws are secured with anchor nuts.
2 Install forward screw. Forward screw is secured with a nut that must be held from within the tunnel.
(b) Install the access plate on the side of the tunnel and secure carpet in place.

RUDDER AND TRIM CONTROLS. (cont)

(2) To Install Rudder Trim Control. (Refer to Figure 17.) (cont)

(c) Before attaching assembly to mounting channel, check that:

1 Clips are installed so safety wire will be on top.

2 Threaded bushing is installed on assembly shaft with welded attachment bushing forward or toward housing.

(d) Attach housing lug to arm provided on rudder pedal torque tube. Secure with bolt, washer and nut. Tighten nut only finger tight and safety with cotter pin.

(e) Clamp rudder pedals in neutral. Position threaded bushing and shaft extension in mounting channel.

1 Install the clevis pin and cotter pin.

2 Check that dimensions noted in Figure 17 are maintained.

(f) Install fuel selector panel cover and cover attachment screws.

(g) Install rudder trim knob

(h) Ensure that neutral indicator aligns with neutral position on cover placard.

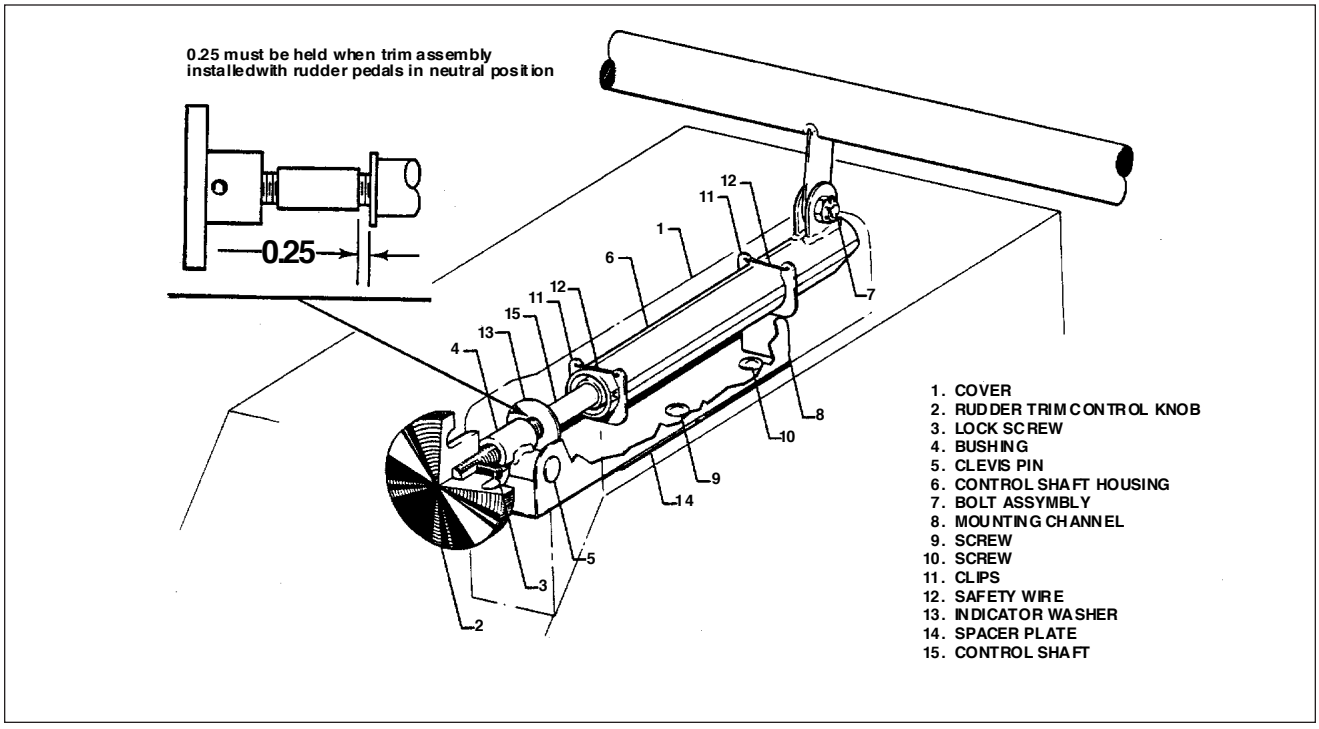

Rudder Trim Control
Figure 17

(3) Rigging and Adjustment of Rudder Trim Controls

No adjustments are necessary, other than those required during installation of assembly in the airplane. Refer to Installation of Rudder Trim Controls, paragraph E, (2).

RUDDER AND TRIM CONTROLS. (cont)

F. Rudder and Steering Pedal Assembly

(1) To Remove Rudder and Steering Pedal Assembly (Refer to Figure 18.)

(a) Remove access panel to aft section of fuselage.

(b) Relieve rudder and stabilator cable tension by loosening one rudder and one stabilator cable turnbuckle in aft section of fuselage.

(c) Remove fuel selector panel cover by removing rudder trim knob and cover attachment screws.

(d) Remove lower selector cover. Disconnect fuel selector control lever from selector torque tube by removing attachment pin located at bottom of the lever.

(e) Remove tunnel plate just aft of tee bar by laying back enough tunnel carpet to remove plate attachment screws.

(f) Disconnect stabilator control cable from lower end of tee bar assembly.

(g) Remove tee bar attachment bolts with their washers and nuts which are through each side of the floor tunnel. Pull the lower end of the tee bar aft.

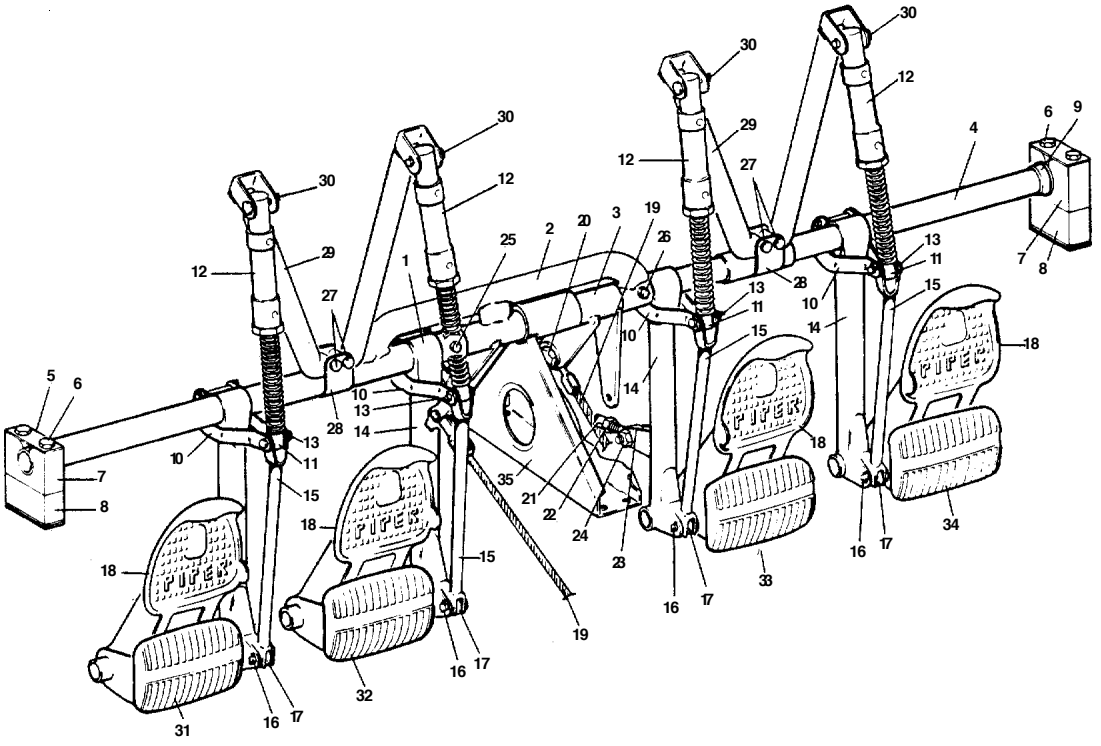

Rudder and Steering Pedal Assembly
Figure 18

RUDDER AND TRIM CONTROLS. (cont)

(1) To Remove Rudder and Steering Pedal Assembly (Refer to Figure 18.) (cont)
- (h) Disconnect control cable ends from arms of torque tube by removing cotter pins, washers, nuts and bolts.
- (i) Disconnect rudder trim from torque tube assembly by removing cotter pin, washers and bolt.
- (j) Disconnect steering rods at the rudder pedals by removing nuts and bolts.
- (k) Disconnect brake cylinders at lower end of each cylinder rod by removing cotter pins, washers, nuts and bolts.
- (l) Disconnect vee braces from torque tube by removing nuts, washers and bolts that secure strap bracket to vee brace.
- (m) If an AutoPilot amplifier is installed over the torque tube at the right side of the fuselage, disconnect electrical plug and release the two fasteners that secure it to its mounting bracket.
- (n) Disconnect torque tube support bracket where it attaches to floor tunnel by removing its attachment bolts.
- (o) Remove two bolts located at the center of the torque tube assembly over the floor tunnel that extend through torque tube. Compress the tubes.
- (p) Disconnect torque tube support blocks from their support brackets on each side of fuselage by removing attachment nuts, washers and bolts.
- (q) Remove trim side panels, if desired.
- (r) Remove assembly from airplane. Note the spacer washer on each end between support blocks.

(2) To Install Rudder and Steering Pedal Assembly (Refer to Figure 18.)
- (a) Assemble torque tube assembly as shown in Figure 18. Do not install the two bolts through the center of the tube assembly at this time.
- (b) Place upper support blocks on the ends of the torque tube assembly. Note that a washer is required on each end of tube.
- (c) Position support blocks on their mounting brackets at each side of fuselage and secure with bolts, washers and nuts.
  - 1 A bushing is required in bolt holes of upper support block.
  - 2 A plate is required on top of upper block, between upper and lower blocks and under block mounting bracket.
- (d) Align bolt holes in center area of torque tube assembly. Install bolts, washers and nuts and tighten.
- (e) Position torque tube support bracket on floor tunnel and secure with bolts.
- (f) Position vee braces on torque tube. Install strap bracket around torque tube and brace. Secure with bolts, washers and nuts.
- (g) Connect ends of brake cylinder rods and clevis rods to idler arms. Secure with clevis and cotter pins.
- (h) Connect steering rods to rudder pedals and secure with bolts and nuts. Check steering rod adjustment per Alignment of Nose Gear, Chapter 32.
- (i) Connect rudder trim to arm of torque tube and secure with bolt, washer, nut and cotter pin. Installed a thin washer under nut. Tighten nut only finger tight.
- (j) Connect ends of rudder control cables to arms provided on torque tube. Secure with bolts, washers, nuts and cotter pins. Ends must be free to rotate.

RUDDER AND TRIM CONTROLS. (cont)

(2) To Install Rudder and Steering Pedal Assembly (Refer to Figure 18.) (cont)

(k) Swing tee bar into place. Insert attachment bolts through each side of the floor tunnel. Secure with washers and nuts.

(l) Connect stabilator control cables to lower end of tee bar with bolt, washer and nut. Secure with cotter pin. Cable ends must be free to rotate.

(m). Set rudder cable tension and check rigging and adjustment per Rigging and Adjustment of Rudder Controls.

(n) Set stabilator cable tension. Check rigging and adjustment per Rigging and Adjustment of Stabilator Controls, Section 27-30-00.

(o) Check aileron cable tension.

(p) Check safety of bolt and turnbuckles.

(q) Install floor tunnel plate and secure with screws. Fasten tunnel carpet in place.

(r) Install fuel selector lever on selector torque tube. Secure with clevis pin and safety with cotter pin.

(s) Install fuel selector covers and rudder trim control knob.

(t) Install access panel to aft section of the fuselage.

(u) Refer to Piper Service Bulletins No. 703 and No 772.

INTENTIONALLY LEFT BLANK

STABILATOR CONTROL SYSTEM

A. Troubleshooting Stabilator Control System

Chart 4
Troubleshooting Stabilator Control System

Trouble	Cause	Remedy
Lost motion between control wheel and stabilator.	Cable tension too low.	Adjust cable tension.
	Linkage loose or worn.	Check linkage and tighten or replace.
	Broken pulley.	Replace pulley.
	Cables not in place on pulleys.	Install cables correctly.
Resistance to stabilator control movement.	System not lubricated properly.	Lubricate system.
	Cable tension too high.	Adjust cable tension.
	Binding control column.	Adjust and lubricate.
Resistance to stabilator control movement. (cont)	Pulleys binding or rubbing.	Replace binding pulleys and/ or provide clearance between pulleys and brackets.
	Cables not in place on pulleys.	Install cables correctly.
	Cables crossed or routed incorrectly.	Check routing of control cables.
	Bent stabilator hinge.	Repair or replace stabilator
Incorrect stabilator travel.	Stabilator stops incorrectly adjusted.	Adjust stop screws.
Correct stabilator travel cannot be obtained by adjusting stops.	Stabilator cables incorrectly rigged.	Rerig stabilator cables.

STABILATOR CONTROL SYSTEM (cont.)

A. Troubleshooting Stabilator Control System (cont.)

Chart 4
Troubleshooting Stabilator Control System (cont.)

Trouble	Cause	Remedy
Lost motion between trim control wheel and trim tab.	Cable tension too low.	Adjust cable tension.
	Cables not in place on pulleys.	Install cables properly.
	Broken pulley.	Replace pulley.
	Linkage loose or worn.	Check linkage and tighten or replace.
Trim control wheel moves with excessive resistance.	System not lubricated properly.	Lubricate system.
	Cable tension too high.	Adjust cable tension.
	Pulleys binding or rubbing.	Replace binding pulleys. Provide clearance between pulleys and brackets
	Cables not in place on pulleys.	Install cables properly.
	Trim tab hinge binding. -	Lubricate hinge. If necessary, replace.
	Cables crossed or routed incorrectly.	Check routing of control cables.
Trim tab fails to reach full travel.	System incorrectly rigged.	Check and/ or adjust rigging.
	Trim drum incorrectly wrapped .	Check and/ or adjust rigging.
Trim indicator fails to indicate correct trim position.	Trim indicator unit not adjusted properly.	Adjust trim indicator.

STABILATOR CONTROL SYSTEM (cont.)

B. Stabilator Cables Removal (Refer to Figure 19.)

(1) To Remove Forward Stabilator Control Cables
- (a) Remove access panel to aft section of the fuselage.
- (b) Disconnect desired control cable at turnbuckle in aft section of fuselage.
- (c) Remove floor tunnel cover in aft area of cabin by:
  - 1 Removing trim plate.
  - 2 Removing carpet over tunnel.
  - 3 Removing cover attachment screws.
- (d) Remove cable guard plate from underside of pulley cluster in aft area of tunnel opening by removing guard attachment screws.
- (e) Remove floor panel located directly aft of main spar by removing center seats, seat belt attachments and screws securing the panel. Lift panel and remove from airplane.
- (f) Remove cable rub blocks attached to the spar housing, located in floor opening, by removing block attachment screws.
- (g) Remove cotter pin cable guard at pulley cluster in aft area of floor opening.
- (h) Remove fuel selector panel cover by removing rudder trim knob and cover attachment screws.
- (i) Remove lower fuel selector cover. Disconnect fuel selector control lever from selector torque tube by removing attachment pin located at bottom of lever.
- (j) Remove tunnel plate just aft of tee bar by removing enough carpet from tunnel to allow plate attachment screws and plate to be removed.
- (k) To remove right (upper) stabilator control cable:
  - 1 Remove cotter pin cable guards at pulley located in forward area of the tunnel.
  - 2 Disconnect cables from lower end of tee bar by removing cotter pin, nut, washer and bolt.
  - 3 Draw cable aft through the floor tunnel.

(2) To remove either aft stabilator control cable:
- (a) Remove access panel to aft section of the fuselage.
- (b) Disconnect desired control cable at turnbuckle in aft section of fuselage.
- (c) Disconnect cable end at stabilator balance arm by removing the cotter pin, nut, washer and bolt.
- (d) Remove cable guard pin at the pulley.
- (e) Remove cable from airplane.

C. Stabilator Cables Installation (Refer to Figure 19.)

– NOTE –

Aft control cable(s) must be installed before installing forward cable(s). Refer to paragraph C, (2)

(1) To install forward stabilator cables:
- (a) Draw control cable through floor tunnel. Be sure right (upper) cable is routed around the pulley that is in the forward area of the forward floor tunnel.

STABILATOR CONTROL SYSTEM (cont.)

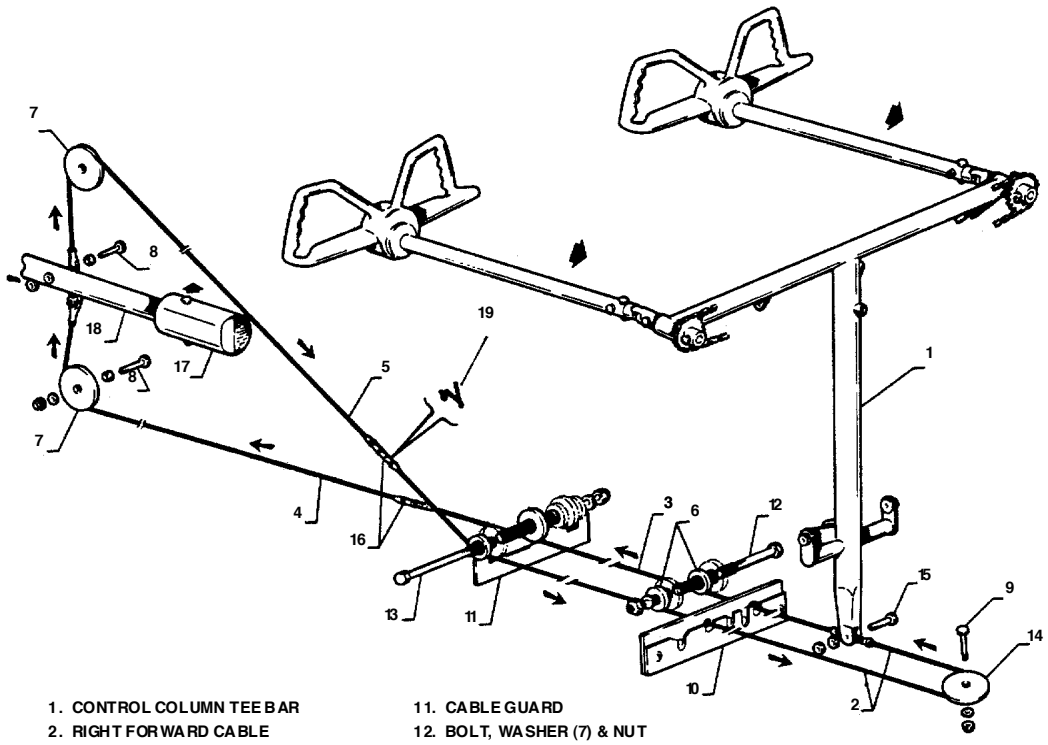

Stabilator Controls
Figure 19

(1) To install forward stabilator cables (cont.):
   (b) Connect cables to lower end of control column tee bar with bolt, washer, nut and cotter pin. Ensure that cable is free to rotate.
   (c) Connect control cable to aft cable at turnbuckle in aft section of fuselage.
   (d) If installing right control cable, install cotter pin cable guard at pulley in forward area of tunnel.
   (e) Install the cable rub blocks to the spar housing located in forward area of floor opening aft of main spar. Secure with screws.
   (f) Install cotter pin cable guard at pulley cluster located in aft area of floor opening, .
   (g) Install cable guard under pulley cluster located in aft area of aft floor tunnel. Secure with screws.
   (h) Set cable tension. Check rigging and adjustment per Rigging and Adjustment of Stabilator Controls.

STABILATOR CONTROL SYSTEM (cont.)

(1) To install forward stabilator cables (cont.):
(i) Install tunnel plate directly aft of tee bar assembly. Secure with screws.
(j) Put floor carpet in place and secure.
(k) Place fuel selector lever on selector torque tube. Secure with pin and safety with cotter pin.
(l) Install lower and upper selector covers. Secure with screws.
(m) Install floor panel aft of main spar. Secure with screws.
(n) Install the seat belt attachments and seats.
(o) Install cover and carpet of aft floor tunnel.
(p) Install access panels to aft section of the fuselage.

(2) To install either aft stabilator control cable:
(a) Route left (lower) cable under pulley located beneath balance arm. Route right (upper) cable over pulley located above balance arm.
(b) Connect cable to the stabilator balance arm. Insert bolt and washer. Install nut and finger tighten as much as possible. Install cotter pin.
(c) Connect cable to forward cable at turnbuckle in aft section of fuselage. Upper aft cable connects to right forward cable and lower cable to left forward cable.
(d) Install cable guard pin at pulley.
(e) Set cable tension. Check rigging and adjustment per Rigging and Adjustment of Stabilator Controls.
(f) Install access panels to aft section of the fuselage.

D. Stabilator Controls Rigging and Adjustment
(1) To check and set the correct degree of stabilator travel:
(a) Level airplane. (Refer to Leveling, Chapter 8.)
(b) Place stabilator in neutral position. Neutral position is obtained when a level, placed on stabilator rigging tool (Figure 20), indicates that stabilator is parallel (bubble centered) with leveling holes noted in Chapter 8, Figure 1. (Rigging tool may be fabricated from dimensions given in Chapter 95.)
(c) To check the stabilator travel:

– NOTE –

The stabilator should contact both of its stops before the control wheel contacts its stops.

1 Place rigging tool on the upper surface of stabilator.
2 Set number of degree up travel, specified in Figure 20, on a bubble protractor
3 Place protractor on rigging tool.
3 Raise trailing edge of stabilator. Check that, when stabilator contacts its stops, protractor bubble is centered.
4 Set the number of degrees down travel specified Figure 20 on a bubble protractor
5 Place protractor on the rigging tool.
6 Lower trailing edge of stabilator. Check that, when stabilator contacts its stops, protractor bubble is centered.

STABILATOR CONTROL SYSTEM (cont.)

D. Stabilator Controls Rigging and Adjustment (cont.)

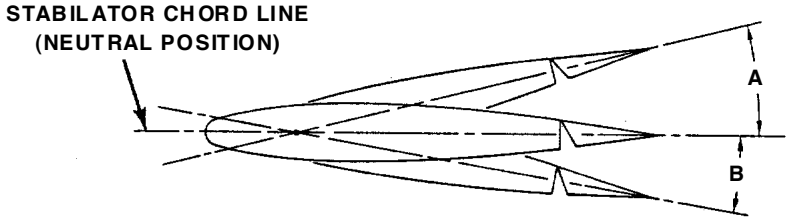

Neutral position of stabilator is with the stabilator chord line parallel with top of front seat tracks. Can be established with bubble protractor. See Rigging and Adjustment of Stabilator Controls in text.

Stabilator

A - STABILATOR TRAILING EDGE UP TRAVEL FROM NEUTRAL = 14.5° ± 0.5°

B - STABILATOR TRAILING EDGE DOWN TRAVEL FROM NEUTRAL = 5.5° ± 0.5°

C - CABLE TENSION = 40 LBS. ± 5 LBS

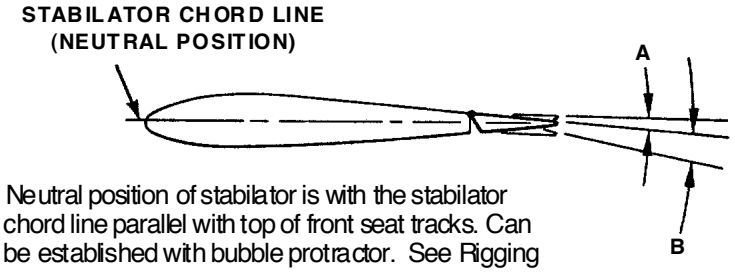

1. Neutral position of stabilator is with the stabilator chord line parallel with top of front seat tracks. Can be established with bubble protractor. See Rigging and Adjustment of Stabilator Controls in text.
2. Maximum free play for control surface tab is 0.06 of an inch measured at tab trailing edge.

Stabilator Trim Tab

A - STABILATOR TAB TRAILING EDGE UP TRAVEL FROM NEUTRAL = 5° ± 1°

B - STABILATOR TAB TRAILING EDGE DOWN TRAVEL FROM NEUTRAL = 8° ± 1°

C - CABLE TENSION 14 LBS. ± 1 LB.

Stabilator Rigging
Figure 20

STABILATOR CONTROL SYSTEM (cont.)

(1) To check and set the correct degree of stabilator travel (cont.):
  (d) If stabilator travel is not correct in either the up or down position:
    1 Remove tail cone by removing the attachment screws.
    2 With use of rigging tool and bubble protractor, turn stops located at each stabilator hinge in or out to obtain correct degree of travel. (Refer to Figure 21.)
    3 Check that locknuts of stop screws are secure.
    4 Install the tail cone.

(2) To check and set stabilator control cable tension:
  (a) Check that stabilator travel is correct.
  (b) Remove access panel to aft section of fuselage and tail cone.
  (c) Position and secure tee bar (control column) 1/2 inch ± 1/4 inch off forward tee bar stop .
  (d) Check each stabilator control cable for correct tension as given in Figure 20.
  (e) If tension is not correct, loosen turnbuckle of ***lower*** cable in aft section of fuselage and adjust turnbuckle of ***upper*** cable to obtain correct tension. Cable tension should be obtained with control wheel one-quarter inch dimension from stop and stabilator contacting its stop.
  (f) With the tension of upper cable correct and control wheel still forward, adjust the turnbuckle of ***lower*** cable to obtain correct tension.
  (g) Check safety of all turnbuckles and bolts.
  (h) Check the full travel of the control wheel with relation to the full travel of the stabilator. Determine that stabilator contacts its stop before control wheel contacts its stops. Move control wheel to full fore and aft positions. Travel distance from point where stabilator contacts its stops, and control wheel contacts its stops, should be approximately equal. Adjust turnbuckles if incorrect.
  I. Install access panels and tail cone.

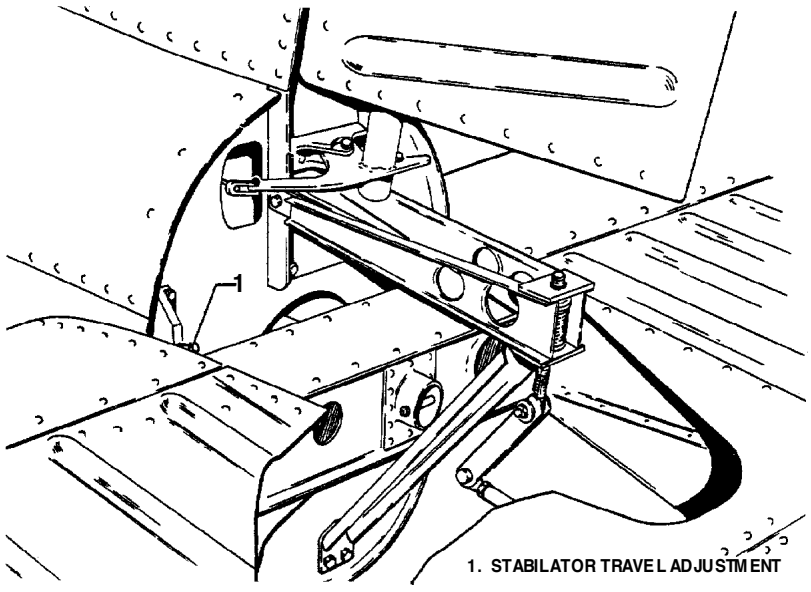

Stabilator Travel Adjustments
Figure 21

STABILATOR CONTROL SYSTEM (cont.)

E Stabilator Trim Assembly

(1) To Remove Forward Stabilator Trim Assembly. (Refer to Figure 23.):

(a) Remove panel to the aft section of airplane.

(b) Remove trim control wheel assembly and/or trim control cables

(c) If aft trim cable is not to be removed, block cables at pulleys in aft section of fuselage to prevent them from unwrapping from trim drum. (Refer to Figure 22.)

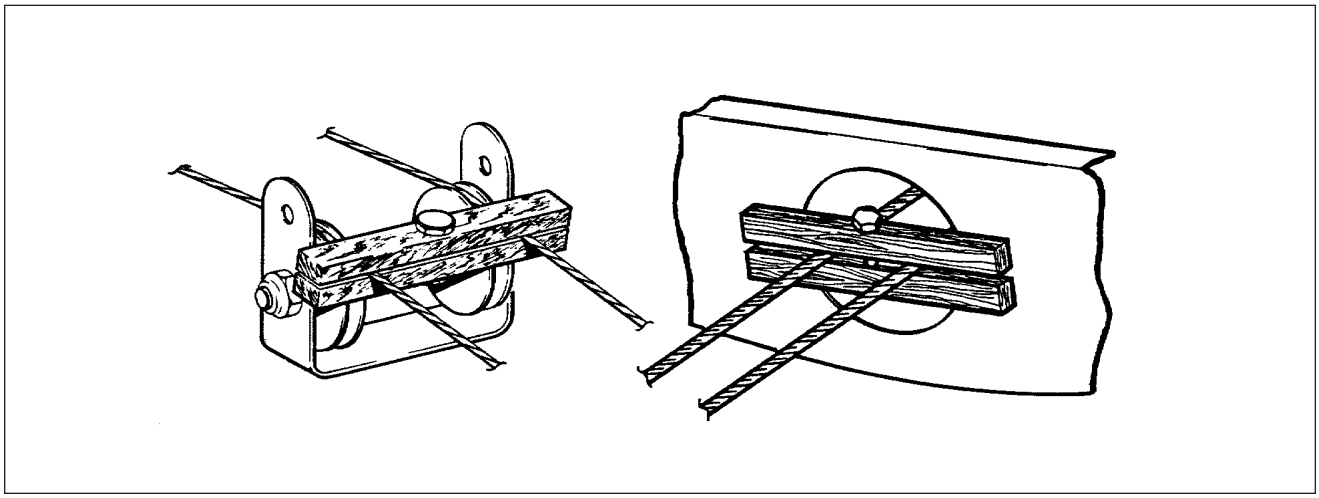

Methods of Securing Trim Cables
Figure 22

(d) To remove trim control wheel, loosen cables at trim cables turnbuckles in aft section of fuselage.

(e) To remove trim cables, disconnect cables at trim cables turnbuckles in aft section of fuselage.

(f) To remove control wheel with drum:

1 Remove control wheel cover by removing cover attaching screws.

2 Remove wheel assembly from its mounting brackets by removing nut, washer and bolt that secures wheel between the brackets. Draw wheel from brackets. ***Use caution not to damage trim indicator wire***.

3 Unwrap ***left*** cable from drum.

4 Wheel and drum are joined by a push fit. Separate these two items with their center bushing. Unwrap ***right*** cable.

5 Tie cables forward to prevent them from slipping back into floor tunnel.

(f) To remove trim control cables:

1 Remove pilot and rear seats.

2. Remove seat belts attached to forward floor tunnel by removing attachment nuts, washers and bolts.

3 Remove heater deflectors from each side of aft end of forward floor tunnel by sliding deflector sideways and releasing retainer spring.

STABILATOR CONTROL SYSTEM (cont.)

E Stabilator Trim Assembly

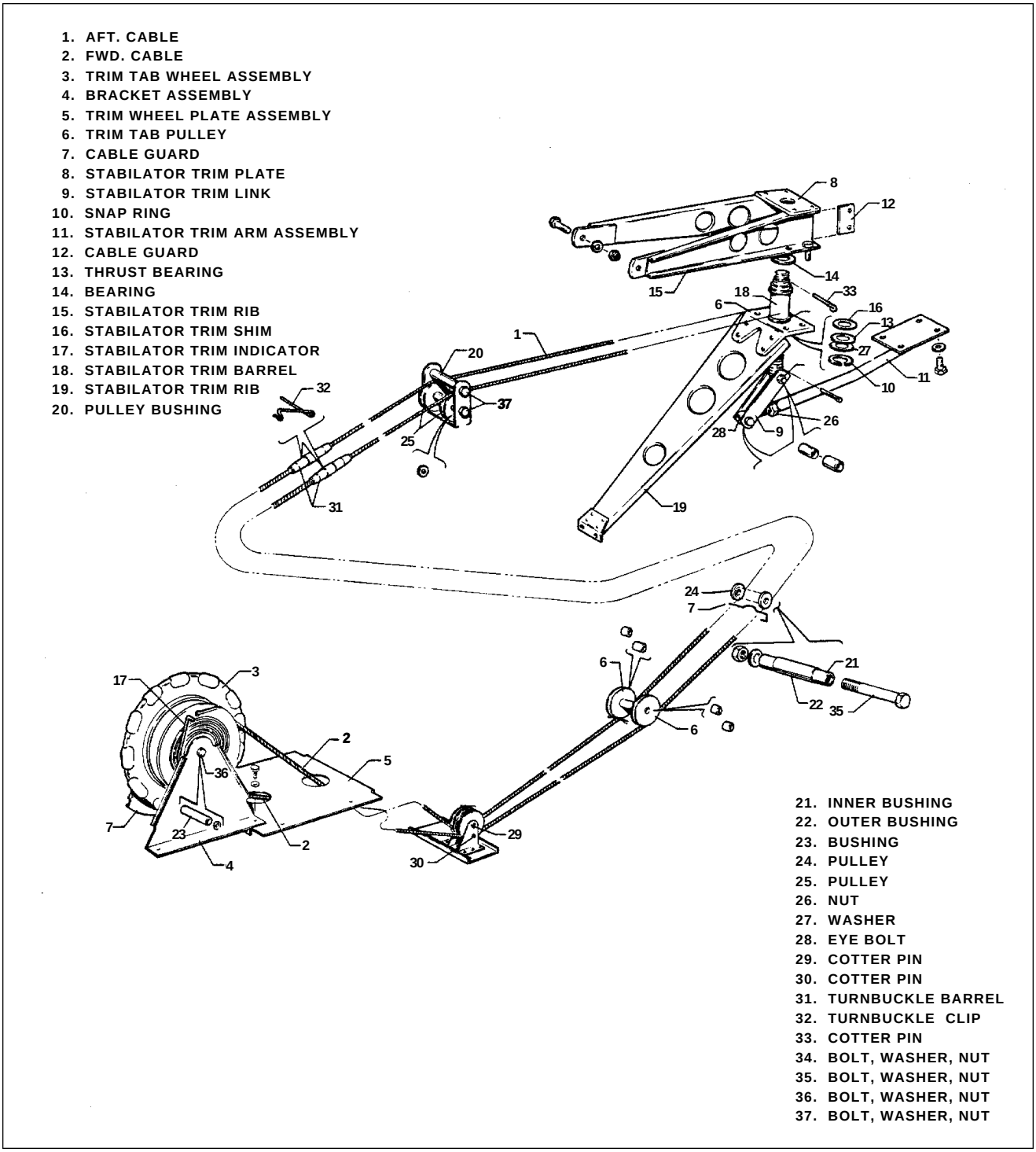

Stabilator Trim Controls
Figure 23

STABILATOR CONTROL SYSTEM (cont.)

(1) To Remove Forward Stabilator Trim Assembly. (Refer to Figure 23.) (cont.):
   (f) To remove trim control cables:
      1 Remove pilot and rear seats.
      2. Remove seat belts attached to forward floor tunnel by removing attachment nuts, washers and bolts.
      3 Remove heater deflectors from each side of aft end of forward floor tunnel by sliding deflector sideways and releasing retainer spring.
      4 Unfasten carpet from aft portion of forward floor tunnel and lay it forward.
      5 Remove tunnel cover located between trim control wheel and spar cover by removing selector knobs and cover attachment screws.
      6 Remove cable pulleys located in forward tunnel by removing cotter pin, washer and clevis pin.
      7 Remove floor panel aft of main spar by removing panel attachment screws and seat belt attachments. Lift panel and remove from airplane.
      8 Remove cable rub blocks located in floor opening on aft side of main spar by removing block attachment screws.
      9 Remove trim plate located on top of forward end of aft floor tunnel.
      10 Remove carpet from aft floor tunnel.
      11 Remove cover plate from top of aft floor tunnel by removing attachment screws.
      12 Remove cable guard from underside of trim cable pulleys located in forward area of aft floor tunnel by removing tinnerman nut and withdrawing the cable guard.
      13 Remove cable guard plate from underside of pulley cluster located in aft area of floor tunnel by removing plate attachment screws.
      14 Remove cable guard from cable pulleys in aft lower section of fuselage forward of cable turnbuckles.
      15 With cables disconnected from trim control wheel, draw cable(s) through floor tunnel.

(2) To Install Forward Stabilator Trim Assembly (Refer to Figure 23.)
   (a) Install trim control wheel with drum:
      1 Wrap ***right*** trim cable on trim drum by inserting swagged ball of cable in slot provided in right side of drum that mates with the control wheel. Looking at this side, wrap drum with three wraps of cable in a ***clockwise*** direction.
      2 Attach trim control wheel to cable drum by aligning long lug of drum with long slot of wheel and pushing the two pieces together.
      3 Wrap ***left*** trim cable on drum by inserting swagged ball of cable in slot provided in the flanged left side of drum. Looking at this side, wrap drum with three wraps of cable in a ***clockwise*** direction.
      4 Lubricate and install bushing in control wheel and drum.
      5 Align control cables and position trim control wheel assembly between its mounting brackets. Check that end of trim indicator wire is positioned in spiraled slot of drum with no bind on end. Install retainer bolt from left side. Install washer and nut.
      6. Install cover over trim control wheel. Secure with screws, unless the control cables have to be installed.

STABILATOR CONTROL SYSTEM (cont.)

(2) To Install Forward Stabilator Trim Assembly (Refer to Figure 23.) (cont.)
(b) To install trim control cables:
1 Draw cable(s) through floor tunnel.
2 Wrap cable drum and install trim control wheel as given in step (2), (a).
3 Position cable pulleys on their mounting bracket and install clevis pin, washer and cotter pin.
4 Connect forward cable to aft cable at turnbuckle in aft section of fuselage. If aft cable has not been installed, refer to paragraph (4).
5 Install cable guard at cable pulleys in aft lower section of fuselage forward of cable turnbuckles.
6 Install cable guard plate at underside of pulley cluster located in aft area of aft floor tunnel. Secure with screws.
7 Install pin type cable guard at underside of pulleys located in forward area of aft floor tunnel. Secure with a tinnerman nut.
8 Install cable rub blocks located on aft side of main spar housing. Secure with screws.
9 Remove blocks that secure aft trim cable. Check that cables are seated on their pulleys.
10. Set cable tension. Check rigging and adjustment. Check safety of all turnbuckles.
11 Install tunnel cover on]forward tunnel. Secure with screws.
12 Install carpet over floor tunnel.
13 Install heat deflectors on each side of floor tunnel.
14 Install cover over trim control wheel and secure with screws and special washers.
15 Install fuel selector knobs and secure with set screws.
16 Install seat belts removed from top of floor tunnel. Secure with bolt, washer and nut.
17 Install floor panel and seat belt attachments aft of main spar. Secure panel with screws.
18 Install aft floor tunnel and secure with screws.
19 Install carpet over aft floor tunnel.
20 Install trim plate on top of forward end of aft floor tunnel.
21 Install panel to aft section of airplane.
22 Install seats.

(3) To Remove Aft Stabilator Trim Controls (Refer to Figure 23.)
(a) Remove access panel to aft section of the fuselage.
(b) Block trim cables at the first set of pulleys forward of cable turnbuckles in the aft section of the fuselage by method shown in Figure 22.
(c) Disconnect cable at the turnbuckles in aft section of fuselage.
(d) Remove cable guard from pulley cluster.
(e) Remove tail cone by removing attachment screws.
(f) Disconnect link between trim screw and trim control arm by removing nut, washer and bolt connecting link to screw.
(g) Remove cotter pin from top of trim screw. Turn screw down and out of barrel.
(h) Remove snap ring, washer and thrust washer from the bottom of barrel.
(i) Disconnect diagonal rib from the horizontal rib that supports trim assembly by removing four attachment nuts, washers and bolts.
(j) Draw trim cable from fuselage.

STABILATOR CONTROL SYSTEM (cont.)

(4) To Install Aft Stabilator Trim Controls (Refer to Figure 23)
  (a) Wrap the trim barrel by (refer to Figure 24):
    1 Laying center (as measured equally from each end to center of the cable) of trim cable in slot of the barrel.
    2 Bring half of cable to be used on right side through e diagonal slot in flange at forward end of barrel and wrap aft in a clockwise direction 11.5 wraps to the center of barrel.
    3 Bring half of cable to be used on left side through diagonal slot in aft end of barrel and wrap forward in a counterclockwise direction 11.5 wraps to the center of barrel.

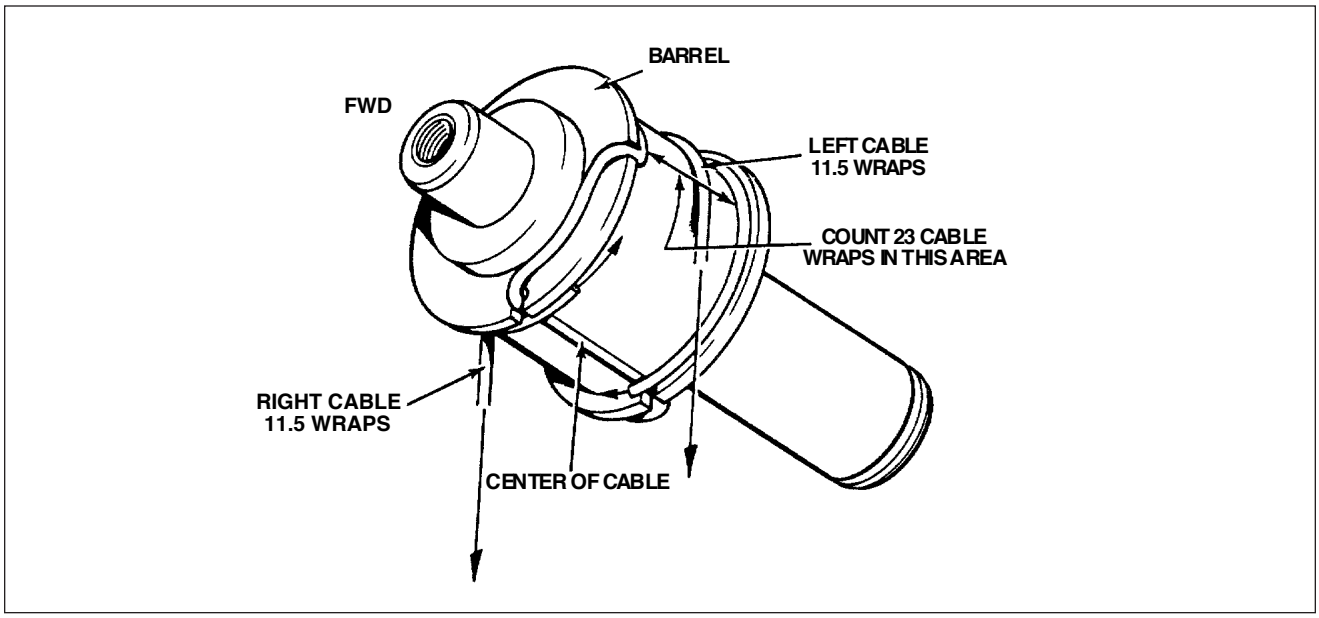

Wrapping Trim Barrels
Figure 24

    4 Count a total of 23 cable wraps on top side of the barrel. (Refer to Figure 24.)
  (b) Block cable by clamping between two pieces of wood laid next to wraps to prevent unwrapping. Fabricate block with a notch so hardware can be installed. After installation of hardware safety wire the bolts.
  (c) Ensure barrel bushings are installed in rib plate and clip.
  (d) Lubricate bushings and install trim barrel in bushings between the two support ribs.
  (e) Attach bottom diagonal rib to horizontal rib. Secure with bolt, washer and nut.
  (f) Install thrust washer, washer and snap ring on lower end of barrel.
  (g) Install trim screw in barrel. Secure both ends with a cotter pin through trim screw.
  (h) Route cables into fuselage. Attach ends to forward trim cables.
  (i) Remove blocks holding forward cables tight.
  (j) Set cable tension. Check rigging and adjustment per Rigging and Adjustment of Stabilator Trim. Check safety of all turnbuckles.
  (k) Install tail cone and secure with screws.
  (l) Install aft fuselage access panel.

STABILATOR CONTROL SYSTEM (cont.)

F Stabilator Trim Rigging and Adjustment (Refer to Figure 25.)

(1) Level the airplane. (Refer to Leveling, Chapter 8.)

(2) Check for proper stabilator trim cable tension as given in Figure 20. If cables were disconnected, rotate trim control wheel several times to allow cables to seat and recheck tension.

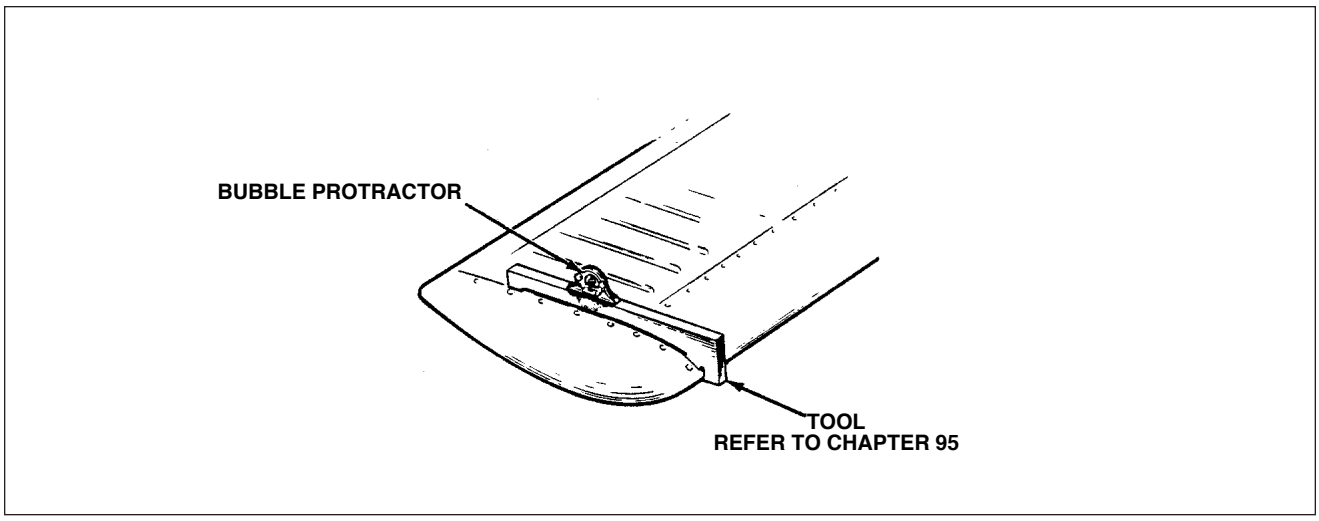

Stabilator Rigging Tool
Figure 25

(3) Secure stabilator in neutral position. Refer to 23-30-00, paragraph D, (1), (b).

(4) Turn trim control wheel until aft end of turnbuckle of ***right*** trim cable is approximately two inches forward of double pulleys at top of rear bulkhead.

(5) Check that trim screw is turned down until cotter pin stop in top of screw is contacting plate on horizontal support rib of trim assembly.

(a) If stop is not contacting plate, and links between the screw and trim control arm are not disconnected, disconnect the two by removing nut, washers and bolt.

(b) With turnbuckle still two inches from pulley, turn screw down until pin contacts plate.

(6) Check rod end on tab actuating arm for approximately six threads forward of jam nut.

(7) Connect links to trim screw and secure with bolt, washers and nut.

(8) Turn the trim wheel until trim tab streamlines with neutral stabilator.

(9) Check bubble of protractor over neutral tab; then check tab travels specified in Figure 19. Degree of travel on protractor is determined by taking difference between protractor reading at neutral and up position, and neutral and down. With airplane level, bubble must be centered at each reading. To obtain correct travel:

(a) Disconnect links at actuating arm rod end.

(b) Turn rod end in or out, as required.

(c) Connect links to actuating arm rod end.

(d) Secure jam nut on actuating arm rod link

(10) Turn trim wheel full travel. Check for turnbuckle clearance and location of tab indicator.

STABILATOR CONTROL SYSTEM (cont.)

G. Stall Warning System

(1) Description and Operation

This system consists of two lift detectors that are electrically connected to the flap position switch and stall warning horn. As stalling condition is approached. the lift detector will activate the stall warning horn. The following ground check can be performed to determine that the lift detectors are functioning.

The lift detectors are located on the leading edge of the left wing at wing station 174.00. With electrical power applied, extend flaps to the 10° flap position. The 0° to 10° flap position activates the inboard lift sensor only. Gently lifting out on the ***inboard*** lift detector sensor should activate the stall warning horn. Lifting out on the ***outboard*** lift detector sensor should ***not*** activate the stall warning horn.

Now position the flap from 20° to 40°. Gently lifting out on the ***outboard*** lift detector sensor should activate the stall warning horn. Lifting out on the ***inboard*** lift detector sensor should ***not*** activate the stall warning horn.

A deicer system incorporates a pneumatic deice system and heated lift detectors on PA-32R-301T only (s/n's 32R-8129012 and up). Although the airplane is not approved for operations in icing conditions, the heat provided to the lift detector sensors and case plates minimizes the possibility of the stall warning system becoming inoperative due to icing

(2) Removal of Lift Detectors.

—NOTE—

The master (battery) switch must be off prior to performing any work on the lift detector. Place reference marks on holding plate and wing skin for use when installing.

(a) Remove screws holding plate around tab. The lift detector is attached to plate. Remove unit from wing.

(b) Mark electrical wires and terminals to facilitate installation. Remove electrical wires from lift detector. Remove lift detector from aircraft.

(2) Installation of Lift Detector

(a) Attach electrical leads to appropriate terminals of lift detector.

(b) Position lift detector and mounting plate assembly on wing. Determine that sensor blade of unit drops down freely. Secure in position with screws previously removed.

STABILATOR CONTROL SYSTEM (cont.)

G. Stall Warning System (cont.)

(3) Adjustment of Lift Detector

The lift detector switch is adjusted at the factory when the airplane is test flown, and should not require any further adjustment during the normal service life of the airplane. Should some type of service on the wing require moving the switch, use the following procedure to position the switch at the proper position.

– CAUTION –

Never adjust the switch by bending the vane.

Loosen the two Philips head screws; one on either side of the vane. If the stall warning comes on too late, move switch up. If the stall warning comes on to early, move switch down. Retighten the screws after making any adjustments.

The only way to test the accuracy of the setting is to fly the airplane into a stall condition and NOTE the speed at which the stall warning comes on. The stall should be made with the flaps and landing gear up and power off. It may be necessary to make several test flights and alternate adjustments before the desired setting is obtained. The stall warning should come on not less than five or more than ten miles per hour before the actual stall occurs.

INTENTIONALLY LEFT BLANK

FLAPS

A. Flap Operating Systems

Airplane serial numbers 32R-8013001 through 32R-8413024 (PA-32R-301). and serial numbers 32R-8029001 through 32R-8429028 (PA-32R-301T) are equipped with manually controlled flaps. The flaps are extended by a control cable and are spring-loaded to the retract (up) position. The control is located between the two front seats on the control console. Pulling the handle up will extend the flaps to any one of three positions: 10°, 25°, or 40°. Handle detents are provided for these flap positions.. To retract the flaps, depress the button on the end of the handle and lower the control.

Airplane serial numbers 32R-8513001 through 32R-8613005, and 3213001 and up (PA-32R-301), and serial numbers 32R-8529001 through 32R-8629005, and 3229001 and up (PA-32R-301T) are equipped with electrically operated flaps. A control lever and indicator light are located on the lower right instrument panel. Selection of a new flap position will activate the flap motor and the light. When the flaps reach the desired position, the flap motor is switched off automatically and the indictor light goes out.

The flap control lever on airplane serial numbers 32R-8513001 through 32R-8513016 (PA-32R-301), and 32R-8529001 through 32R-8529020 (PA-32R-301T) has three stops: 0°, 25°, and 40°.

The flap control lever on airplane serial numbers 32R-8613001 through 32R-8613005 and 3213001 and up (PA-32R-301), and 32R-8629001 through 32R-8629005 and 3229001 and up (PA-32R-301T), have four stops: 0°, 10°, 25°, and 40°.

B Manually Operated Flaps

(1) Removal of Manually Operated Wing Flap Controls (Refer to Figure 26)

(a) To remove flap torque tube assembly:

1 Extend flaps to 40° position

2 Remove floor panel located aft of main spar by removing center seats, seat belt attachments and screws securing panel. Lift panel and remove from airplane.

3 Remove access plate located between underside of aft section of each wing and fuselage by removing attaching screws.

4 Disconnect left and right flap control tubes (rods) either:

a At the flaps by removing nuts, washers and bolts at the torque tube cranks (arms) or by;

b. Removing bolts and washers from inner side of each crank. Remove bolt through a hole in the fuselage side skin located over torque tube .

5 Disconnect flap tension spring at the spar or at aft end of control cable.

6 Grasp flap handle, release plunger, and allow handle to return to retracted position. Use caution as forward pressure will be on handle with tension spring disconnected.

7 Disconnect flap return spring at spar or at return chain.

8 Disconnect control cable from chain by removing cotter pin, nut, and clevis bolt.

9 Remove tube support bearing blocks (Figure 25, references numbers 16 and 33) by removing block attachment bolts.

FLAPS (cont.)

B Manually Operated Flaps (cont.)

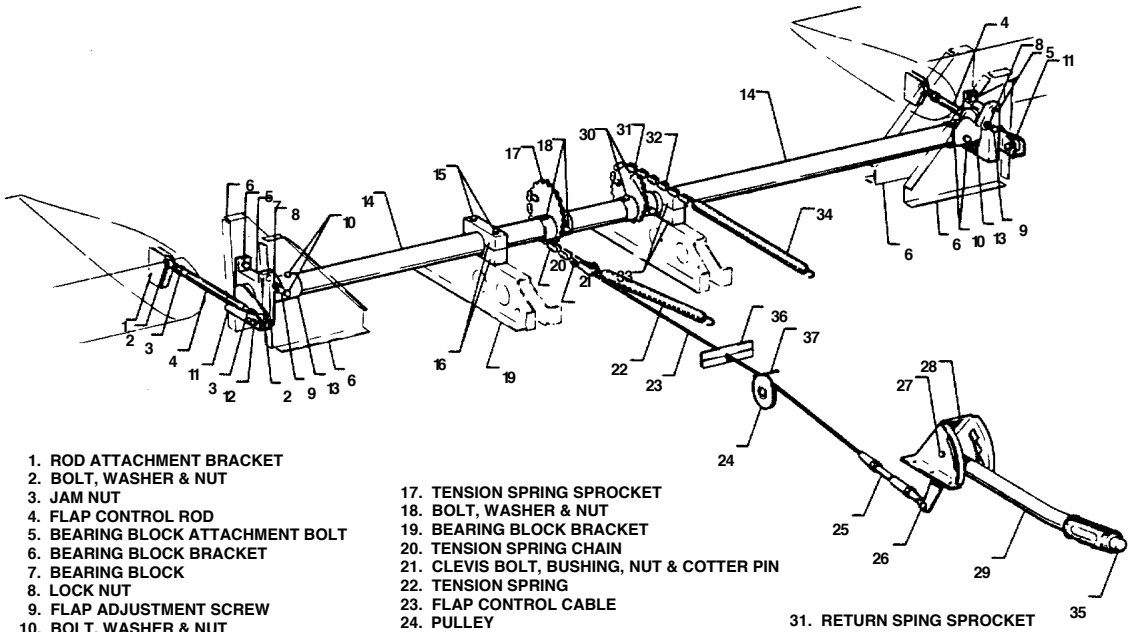

Manually Operated Flap System
Figure 26

(1) Removal of Manually Operated Wing Flaps (Refer to Figure 26) (cont.)

(a) To remove flap torque tube assembly (cont.):

10 Remove nuts, washers and bolts securing right and left cranks, and stop fittings on torque tube.

11 Remove cranks from torque tube between each wing and fuselage, .

12 Disconnect one end bearing block from its mounting bracket by removing nuts, washers and bolts.

13 Slide tube from end bearing block that is still attached to its brackets. Raise end and lift it from floor opening.

(b) To remove flap control cable:

1 Remove center seats and screws securing floor panel. Remove floor panel.

2 Extend flaps to 40° position. Disconnect flap tension spring from cable.

3 Retract flaps. Use caution as there will be forward pressure on handle with spring disconnected .

4 Disconnect cable from chain by removing cotter pin, nut, clevis pin and bushing.

5 Remove flap handle bracket and trim control wheel cover.

FLAPS (cont.)

(b) To remove flap control cable (cont.):
6 Remove aft heat deflectors on each forward floor tunnel by sliding far enough to release spring fasteners.
7 Lift aft section of tunnel carpet far enough to remove screws securing tunnel cover between flap handle and spar cover. Remove spar cover.
8 Remove cotter pin cable guard from flap cable pulley located inside floor tunnel just ahead of spar housing.
9 Remove cable rub blocks located in floor opening on aft side of spar housing by removing attachment screws.
10. Disconnect cable turnbuckle at flap handle by removing cotter pin. nut and bolt.

(c) To remove flap handle and bracket:
1 Disconnecting cable turnbuckle from handle.
2 Remove bolts securing the bracket to floor tunnel.
3 Remove handle and bracket.

(2) Installation of Manually Operated Wing Flap Controls (Refer to Figure 26)
(a) To install the flap handle with bracket:
1 Position assembly on floor tunnel
2 Secure with bolts.
(b) To install flap control cable:
1 Attach cable and turnbuckle to flap handle. Secure with a new clevis bolt, nut and cotter pin. Check that turnbuckle end is free to rotate on arm.
2 Route cable through tunnel and spar housing.
3 Install cable rub blocks on aft side of spar housing. Secure with screws.
4 Install cotter pin cable guard over pulley located just ahead of spar housing in forward floor tunnel.
5 Attach cable end to tension chain and secure with bushing, clevis bolt, nut and cotter pin. If chain is not installed because of torque tube assembly being removed, install torque tube assembly per paragraph (c) before performing step 6.
6 Pull the flap handle full back and connect the tension spring to the cable end.

(c) To install flap flap torque tube assembly:
1 Install chain sprockets with chains on torque tube . Secure with bolts, washers and nuts.
2 Slide the tube stop fittings on their respective ends of the torque tube.
3 Check that one end bearing block fitting is installed between its attachment brackets.
4 Slide the other end bearing block over its respective end of torque tube.
5 Position torque tube by placing end with bearing block attached between appropriate mounting bracket Slide other end into previously attached end bearing block. Secure with bolts, washers and nuts.
6. Push torque tube cranks (arms) on each end of torque tube and slide stop fitting in place.
7 Align bolt hole of crank and stop fitting with holes in the torque tube and install bolts. Holes in stop fitting are elongated to allow stop fitting to be pushed against bearing block allowing no side play of assembly. Tighten bolt assemblies on stop fittings.
8 Install tube support blocks on their support brackets and secure with bolts.

FLAPS (cont.)

(2) Installation of Manually Operated Wing Flap Controls (Refer to Figure 26)

(c) To install flap flap torque tube assembly:

6. Push torque tube cranks (arms) on each end of torque tube and slide stop fitting in place.

7 Align bolt hole of crank and stop fitting with holes in the torque tube and install bolts. Holes in stop fitting are elongated to allow stop fitting to be pushed against bearing block allowing no side play of assembly. Tighten bolt assemblies on stop fittings.

8 Install tube support blocks on their support brackets and secure with bolts.

9 Connect flap return spring to return chain and/ or at spar housing.

10 Connect control cable end to the tension chain. Secure with bushing, clevis bolt, nut and cotter pin.

11 Pull flap handle full back (extend) and connect tension spring. Release flap handle to the forward (retract) position.

12 Connect flap control tube to flap and/ or torque tube crank and secure. The bolt and bushing that connects control tube to crank is installed through a hole in the side of fuselage located over torque tube.

(d) Install tunnel cover and secure with screws.

(e) Install tunnel carpet, heat deflectors, and bracket cover.

(f) Install floor panel and seat belt attachments. Secure with screws

(g) Install seats.

(3) Manually Operated Wing Flaps Rigging and Adjustment

(a) Place flap handle in full forward (flap retracted) position.

(b) Remove floor panel just aft of main spar.

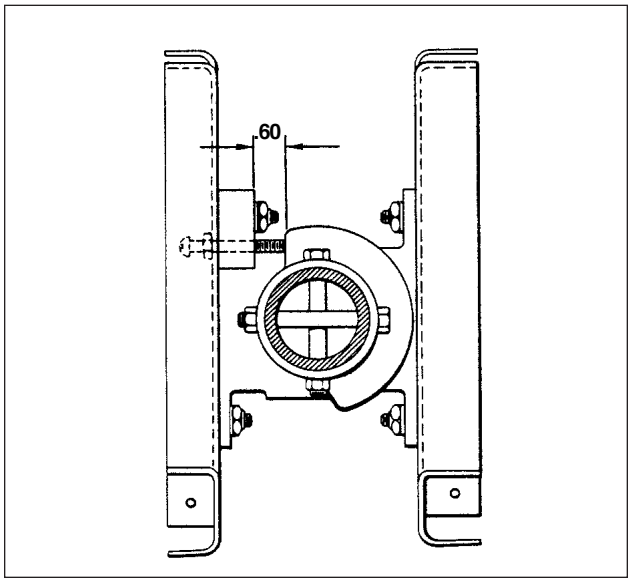

Flap Step Adjustment
Figure 27

FLAPS (cont.)

(3) Manually Operated Wing Flaps Rigging and Adjustment (cont.)

(c) Adjust flap up stop and step lock

1 Loosen jam nut of ***right*** torque tube stop screw, located in the floor opening along the outer end of the flap torque tube.

2 Turn stop screw to obtain approximately 0.60 of an inch between stop fitting and bearing block measured along top side of screw (refer to Figure 27). It may be necessary to loosen the adjustment screw of the left stop.

(d) Check cable tension and adjust as required to remove all slack. Do not tighten cable to point that stop screw comes off stop.

(e) Place a 0.125 of an inch thick spacer between right hand stop screw and stop fitting. With flaps installed and control rods connected, determine that, when down pressure is applied on top of the flap, it will not cause the flap to come down. If the flap extends (comes down under pressure), turn stop screws out a few turns until flap remains in the up-lock position the spacer inserted. Adjust both stop screws, tighten jam nuts and remove spacer block.

(f) To check up-neutral position of flaps:

1 Place a flap rigging tool as shown in Figure 28 against underside of wing and flap as close as possible to the outboard end of the flap without contacting any rivets. (Refer to Chapter 95 for dimensions to fabricate this tool.)

2 Tool must be positioned parallel with wing ribs, with aft end of tool even with trailing edge of flap.

(g) With flap control rods connected between torque tube crank arm and flaps; check that:

1 Surface of wing contacts tool at its forward surface and at spacer.

2 Aft end of flap contacts aft end of tool. Maintain a light pressure on underside of flap to remove slack in the linkage while making this check.

(h) Adjust each flap push rod so that chord line of flap forms a zero degree + 1° angle with wing chord at the outboard end of flap. This is the neutral position.

—NOTE—

To remedy condition of wing heaviness during flight, on PA-32R-301/301T SP models, adjust flap on side of heavy wing down from neutral by lengthening the control rod . Check inspection hole in each rod end to ensure that there are sufficient threads remaining and a wire cannot be inserted through these holes. Do not raise flap of other wing above neutral. A wing heavy condition on PA-32R-301 II HP models may be corrected by ground adjusting trim tab on trailing edge of left airleron.

(i) Measuring from the neutral position obtained from Steps (f), (g), and (h):

1 Maintain light up pressure on underside of flap.

2 Check flap down travel, which should be 10° ± 2° at first notch, 25° ± 2° at second notch and 40° ± 2° at the third notch.

3 Adjust the torque tube screw in or out as required. After any adjustment of screw it will be necessary to review steps (c) thru (i).

(j) Check complete operation of the flaps, flap control handle and ratchet mechanism.

(k) Install all access covers removed.

FLAPS (cont.)

(3) Manually Operated Wing Flaps Rigging and Adjustment (cont.)

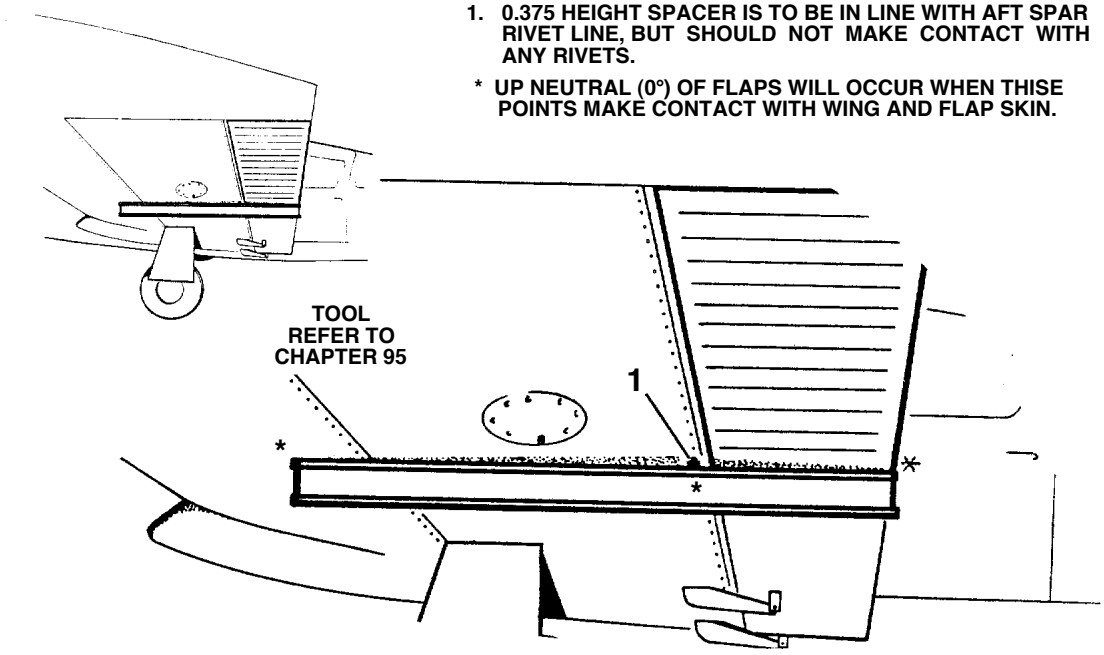

Flap Rigging Tool
Figure 28

C Electrically Operated Wing Flaps.

(1) Removal of Electrically Operated Wing Flap Controls (Refer to Figure 29)

(a) To remove flap torque tube assembly:

1 Extend flaps to 40° position

2 Remove floor panel located aft of main spar by removing center seats, seat belt attachments and screws securing panel. Lift panel and remove from airplane.

3 Remove access plate located between underside of aft section of each wing and fuselage by removing attaching screws.

4 Disconnect left and right flap control tubes (rods) either:

a At the flaps by removing nuts, washers and bolts at the torque tube cranks (arms) or by;

b. Removing bolts and washers from inner side of each crank. Remove bolt through a hole in the fuselage side skin located over torque tube .

5 Disconnect electrical connections from limit switches mounted to torque tube switch plate.

6 Disconnect cable ends from torque tube pulley assembly by removing the cotter pins.

7 Disconnect jack screw actuator from torque tube bellcrank by removing nut, washers and bolt.

FLAPS (cont.)

C Electrically Operated Wing Flaps. (cont.)

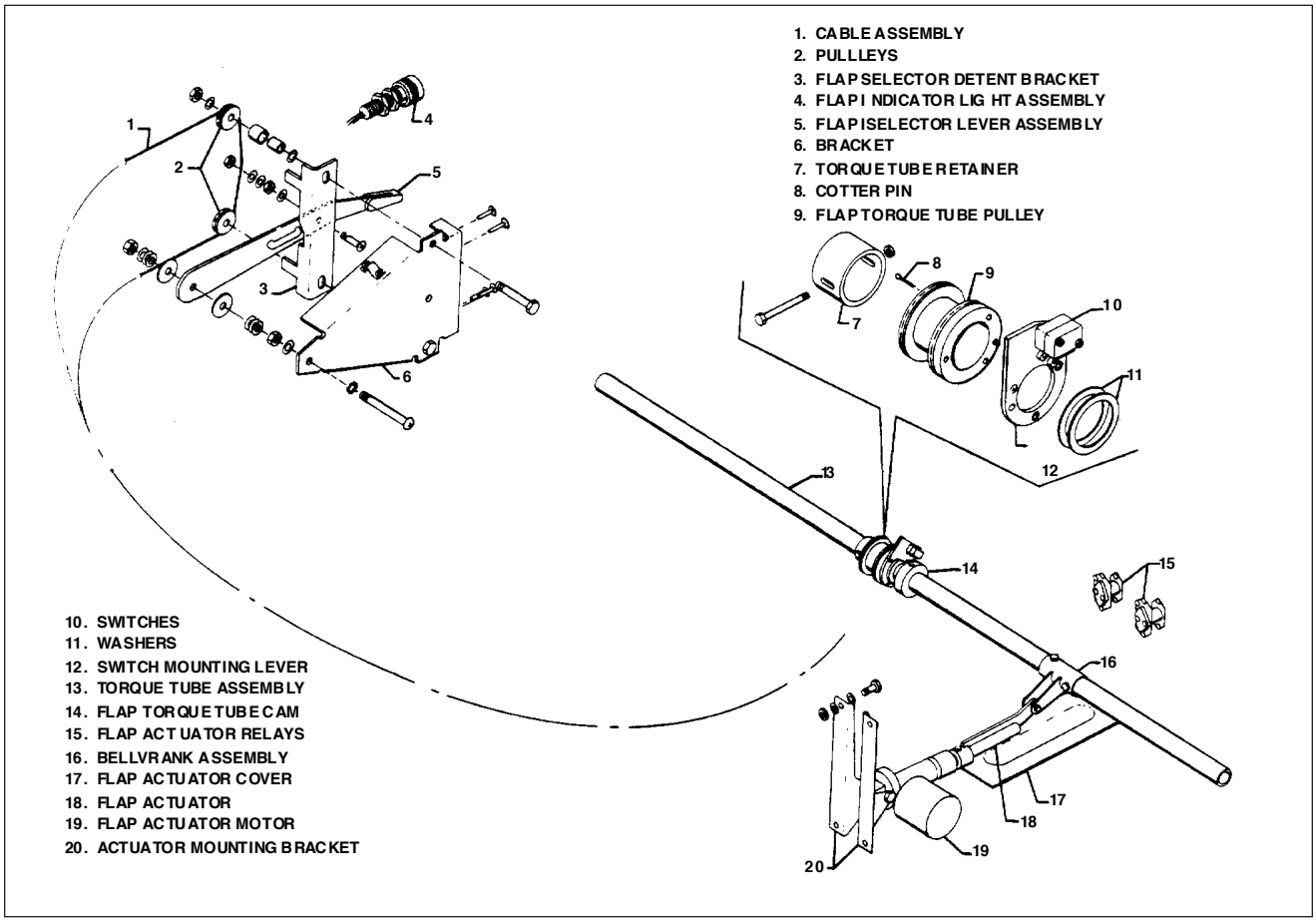

Electrically Operated Flap System
Figure 29

(a) To remove flap torque tube assembly (cont.):
- 8 Remove tube support bearing blocks by removing block attachment bolts.
- 9 Remove nuts, washers and bolts securing right and left cranks, and stop fittings on torque tube.
- 10 From between each wing and fuselage, remove cranks from torque tube.
- 11 Disconnect one bearing block from its mounting brackets by removing nuts, washers and bolts.
- 12 Slide tube from bearing block still attached to its brackets. Raise end and lift it from floor opening.

(b) To remove flap control cable:
- 1 Remove center seats. Remove center floor panel by removing screws securing panel.
- 2 Remove aft heat deflectors on each forward floor tunnel by sliding them far enough to release spring fasteners.

FLAPS (cont.)

(b) To remove flap control cable (cont.):
3 Lift aft section of tunnel carpet far enough to remove screws securing tunnel cover. Remove cover.
4 Remove cotter pins securing cable ends to pulley assembly on torque tube.
5 Remove clamps securing cable housings to support bracket.
6 Disconnect flap selector lever and cable from flap selector lever support bracket mounted on aft side of instrument panel.
7 Remove cable assembly from tunnel.

(c) To remove flap actuator jack screw and motor assembly:
1 Remove center seats. Remove center floor panel by removing screws securing panel.
2 Disconnect electrical leads to flap actuator motor.
3 Remove nut, washers and bolt securing flap actuator jack screw to torque tube bellcrank.
4 Remove nut. washers and bolt securing flap actuator jack screw to its mounting bracket. Do not drop bushing in jack screw mounting end.
5 Remove flap actuator jack screw and motor assembly through center floor opening

(2) Installation of Electrically Operated Wing Flap Controls (Refer to Figure 29)

(a) To install flap actuator jack screw and motor assembly:
1 Position flap actuator jack screw and motor assembly through center floor opening. Do not drop bushing in jack screw mounting end.
2 Install nut. washers and bolt securing flap actuator jack screw to its mounting bracket.
3 Install nut, washers and bolt securing flap actuator jack screw to torque tube bellcrank.
4 Connect electrical leads to flap actuator motor.

(b) To install flap control cable:
1 Position cable assembly in tunnel.
2 Connect cable to flap selector lever and flap selector lever support bracket mounted on aft side of instrument panel.
3 Attach cable ends to pulley assembly on torque tube by installing cotter pins .
4 Install clamps securing cable housings to support bracket.
5 Install aft section tunnel cover and secure with screws.
6 Install tunnel carpet and heat deflectors,
7 Install center seats.

(c) To install flap torque tube assembly:
1 Check that one end bearing block fitting is installed between its attachment brackets.
2 Slide the other end bearing block over its respective end of torque tube.
3 Position torque tube by placing end with bearing block attached between appropriate mounting bracket Slide other end into previously attached end bearing block. Secure with bolts, washers and nuts.
4 Between each wing and fuselage, attach cranks to torque tube.
5 Install nuts, washers and bolts securing right and left cranks, and stop fittings on torque tube.
6 Install tube support bearing blocks . Secure by installing block attachment bolts.
7 Connect jack screw actuator to torque tube bellcrank and secure with nut, washers and bolt.

FLAPS (cont.)

(c) To install flap torque tube assembly (cont.):
8 Connect cable ends to torque tube pulley assembly and secure with cotter pins.
9 Connect electrical connections to limit switches mounted to torque tube switch plate.
10 Connect left and right flap control tubes (rods) either:
a At flaps by installing nuts, washers and bolts at torque tube cranks (arms) or by;
b. Installing bolts and washers to inner side of each crank. Install bolt through a hole in the fuselage side skin located over torque tube .
11 Install access plate located between underside of aft section of each wing and fuselage by installing attaching screws.
12 Install floor panel located aft of main spar and secure with screws
13 Install center seats and seat belt attachments.
14 Retract flaps.

(3) Rigging and Ajustment of Electrically Operated Wing Flaps:
(a) To Rig Control Cable:
1 Loosen lever cable clamp nut so that cable can move freely through cable clamp. Secure lever in the full down position. (Refer to Figure 30).
2 Position the swash plate assembly on torque tube and secure inplace. (Refer to Figure 30.)
3 Loosen cable housing clamps at pulley support channel. Adjust cable tension so that a 5 ± 0.5 pound pull midway between cable housing clamps and swash plate assembly will deflect the cable 0.38 inch from relaxed position. Tighten cable housing clamp. (Refer to Figure 31.)
4 Tighten lever cable lamp nut so that cable is compressed to 1/2 its full diameter. (Refer to Figure 30.)

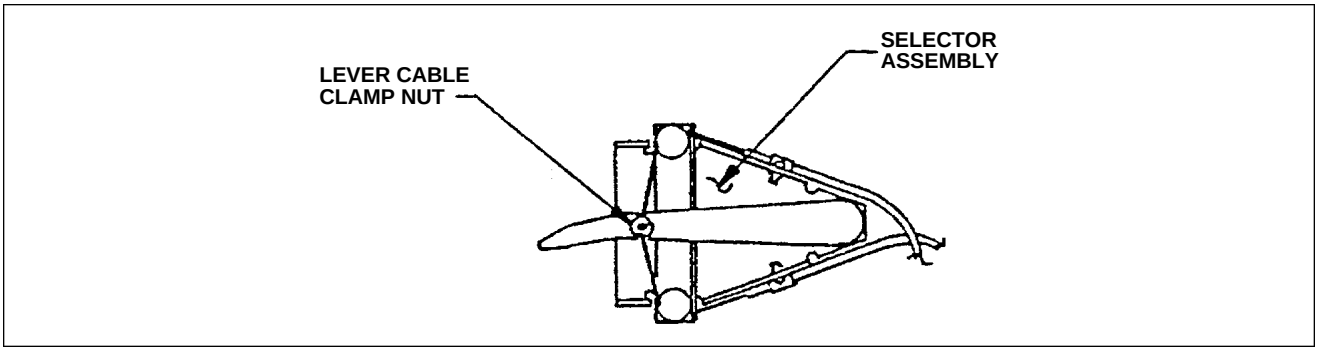

Flap Selector and Cable Assembly
Figure 30

FLAPS (cont.)

(3) Rigging and Ajustment of Electrically Operated Wing Flaps (cont.):

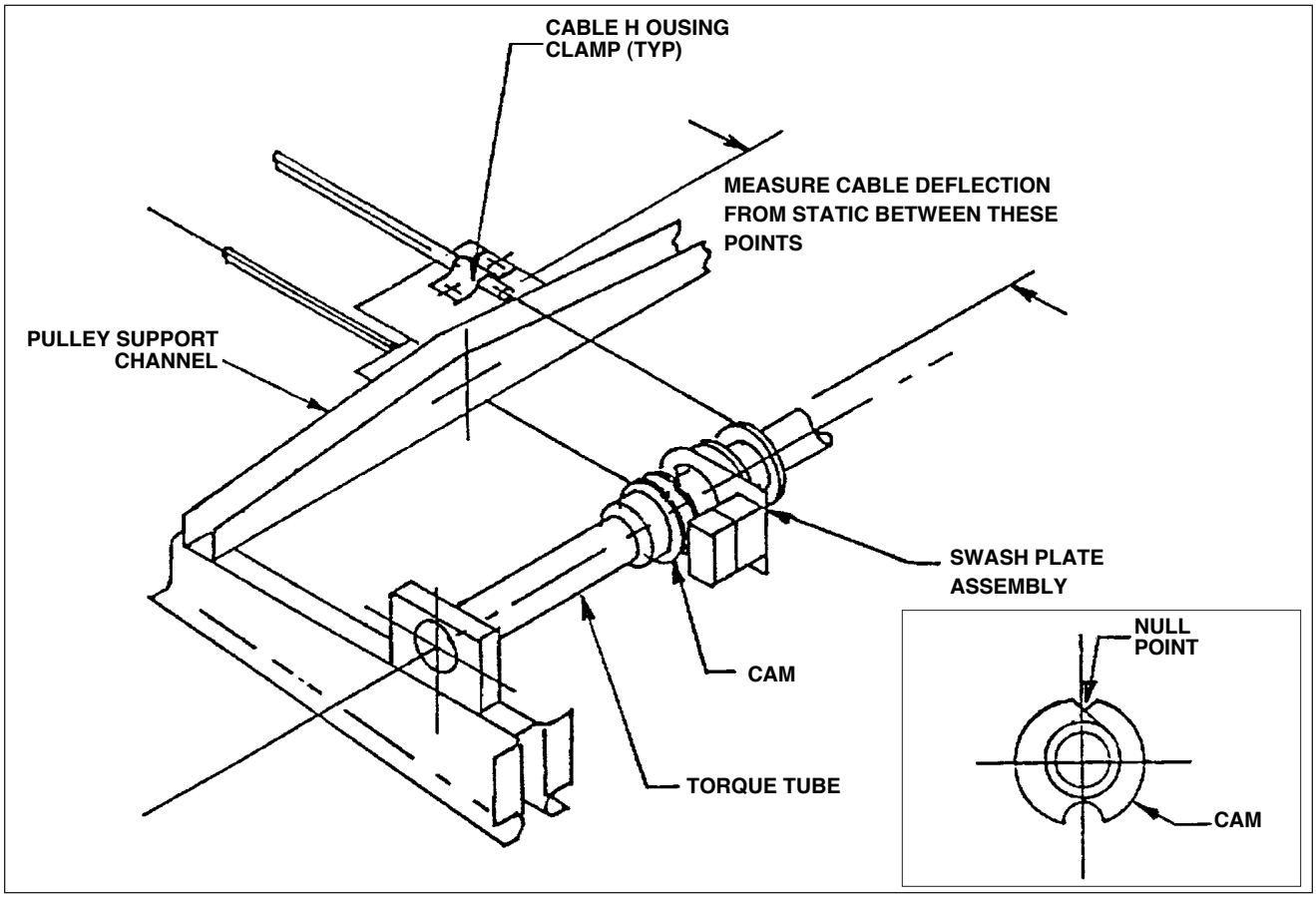

Electricaly Operated Flap Torque Tube Assembly
Figure 31

(b) To Adjust Cam:

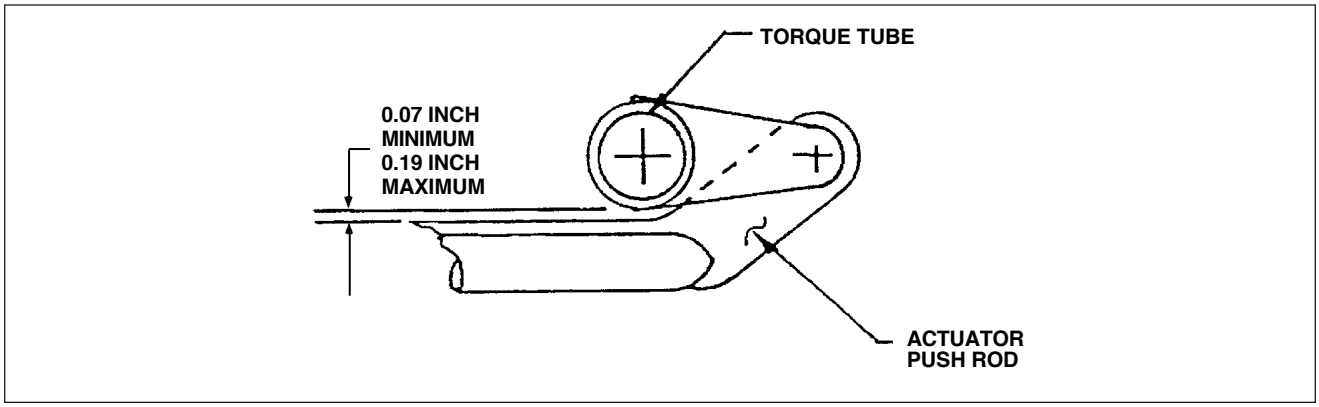

Electricaly Operated Flap Cam Adjustment
Figure 32

FLAPS (cont.)

(b) To Adjust Cam (cont.):

1 Pull the electric flap circuit breaker.
2 Disconnect actuator motor power leads and connect a reversible 12 volt dc power source.
3 Run actuator out so that there is 0.10 inch clearance between torque tube and the actuator push rod. (Refer to Figure 31).
4 Connect aircraft wires to actuator motor and secure.
5 Pull electric flap circuit breaker. Apply power to aircraft buss.

— NOTE—

Be sure that switch rollers are in cam "null point", as shown in Figure 26 inset, and not 180 degrees off.

6 Loosen set screw in cam and rotate until flap in-transit light is out. (Refer to Figure 31). Tighten the cam set screws.
7 Push in electric flap circuit breaker and verify that flap motor does not run.
8 Move selector lever to full DOWN position. Verify that actuator retracts and stops about 0.4 inch short of bottoming out.
9 Move flap selector lever to the full UP position. Verify that clearance between actuator push rod and torque tube is .07 inch minimum and 0.19 inch maximum. (Refer to Figure 32).
10 Adjust left and right stop screws so that contact is just made with stop. Tighten jam nuts. (Refer to Figure 33).

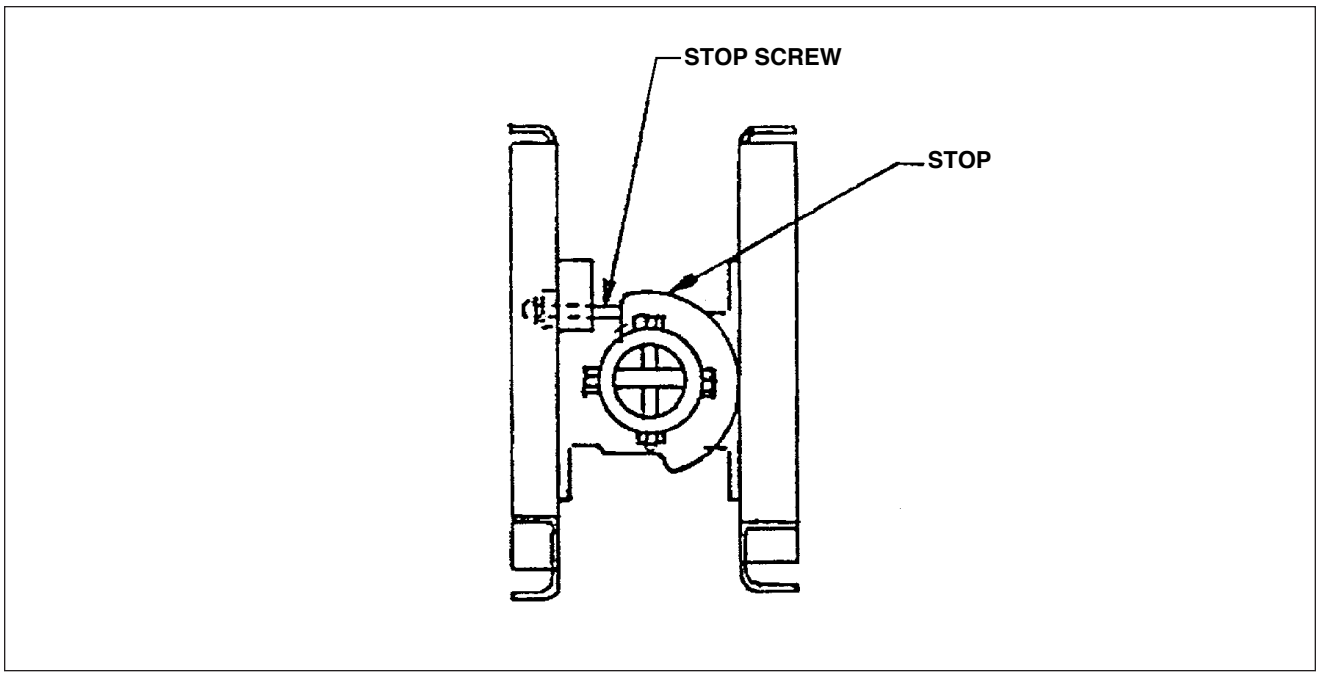

Stop Screws Adjustment
Figure 33

FLAPS (cont.)

(c) To Set Flap Angle

1 Place flap selector in UP position.

2 Adjust each flap push rod so that chord line of flap forms a 0° ± 1° angle with wing chord at outboard end of flap.

— NOTE —

While making adjustrnent, maintain a slight up pressure on underside of flap sufficient to take slack out of linkage.

(d) Flap Travel Check.

1 While checking flap travel, maintaining a light up pressure on underside of flap, . Travel shall be:

a In the full UP position: 0° ± 1°.

b At FIRST stop:10° ± 2°.

c At the SECOND stop: 25° ± 2°.

d At full DOWN position: 40° ± 2°.

PAGE INTENTIONALLY LEFT BLANK

PAGE INTENTIONALLY LEFT BLANK

CHAPTER

28

FUEL

CHAPTER 28 - FUEL

TABLE OF CONTENTS/EFFECTIVITY

CHAPTER SECTION	SUBJECT	GRID NO.	EFFECTIVITY
28-00-00	FUEL	2D14	July 1, 1993
28-00-00	General	2D14	July 1, 1993
28-00-00	Description	2D14	July 1, 1993
28-00-00	Troubleshooting	2D14	July 1, 1993
28-10-00	FUEL STORAGE	2D20	July 1, 1993
28-10-00	Aluminum Fuel Tanks Inspection and Repair	2D20	July 1, 1993
28-10-00	Inboard Fuel Tank Removal	2D20	July 1, 1993
28-10-00	Inboard Fuel Tank Installation	2D20	July 1, 1993
28-10-00	Outboard Fuel Cell Removal	2D21	July 1, 1993
28-10-00	Molded Nipple Fittings Installation	2D21	July 1, 1993
28-10-00	Fuel Cell Compartment	2D21	July 1, 1993
28-10-00	Cleaning of Fuel Cells	2D23	July 1, 1993
28-10-00	Inspection of Fuel Cells	2D23	July 1, 1993
28-10-00	Handling and Storage of Fuel Cells	2D23	July 1, 1993
28-10-00	Repair of Fuel Cells	2D23	July 1, 1993
28-10-00	Handling of Repair Materials	2D24	July 1, 1993
28-10-00	Repair Procedures of Goodyear Vithane Fuel Cells	2E1	July 1, 1993
28-10-00	Fuel Cells Repair Limitations	2E1	July 1, 1993
28-10-00	Heat Cure Repair Patch Method	2E2	July 1, 1993
28-10-00	Air Cure Repair Patch Method	2E3	July 1, 1993
28-10-00	Accessory Replacement	2E3	July 1, 1993
28-10-00	Fuel Cell Defect Repairs	2E4	July 1, 1993
28-10-00	Testing Fuel Cells	2E4	July 1, 1993
28-10-00	Outboard Fuel Cell Installation	2E5	8-80
28-10-00	Fuel System Inspection	2E6	July 1, 1993
28-10-00	Locking Fuel Cap	2E6	July 1, 1993
28-10-00	Disassembly of Locking Fuel Cap	2E6	July 1, 1993
28-10-00	Assembly of Locking Fuel Cap	2E6	July 1, 1993
28-20-00	DISTRIBUTION	2E10	July 1, 1993
28-20-00	Fuel Selector Valve	2E10	July 1, 1993
28-20-00	Fuel Selector Valve and Filter Removal	2E10	July 1, 1993
28-20-00	Cleaning Filter Assembly	2E10	July 1, 1993
28-20-00	Fuel Selector and Filter Valve Installation	2E10	July 1, 1993
28-20-00	Cleaning Fuel System	2E11	July 1, 1993
28-20-00	Electric Fuel Pump	2E12	July 1, 1993
28-20-00	Electric Fuel Pump Removal	2E12	July 1, 1993
28-20-00	Electric Fuel Pump Installation	2E12	July 1, 1993

CHAPTER 28 - FUEL

TABLE OF CONTENTS/EFFECTIVITY

CHAPTER SECTION	SUBJECT	GRID NO.	EFFECTIVITY
28-40-00	INDICATING	2E14	July 1, 1993
28-40-00	Fuel Quantity Sender Unit	2E14	July 1, 1993
28-40-00	General	2E14	July 1, 1993
28-40-00	Fuel Quantity Sender and Gauge Check	2E14	July 1, 1993
28-40-00	PA-32R-301 SP and PA-32R-301T		
28-40-00	Airplanes	2E14	July 1, 1993
28-40-00	PA-32R-301 II HP Airplanes	2E15	July 1, 1993

FUEL

A. General

(1) Description.

The fuel system consists of two interconnected tanks in each wing, having a combined capacity of 53.5 U.S. gallons per wing, for a total capacity of 1071 U.S. gallons. The inboard tank becomes an integral part of the wing surface when installed. Fuel flow is indicated on the gauge located in the instrument panel. A fuel quantity gauge for each wing system is also located in the instrument panel, and indicates the amount of fuel remaining as transmitted by the electric fuel quantity sending units located in the wing tanks. An exterior sight gauge is installed in the inboard tank of each wing so fuel quantities can be checked on the ground during the preflight of the airplane.

Fuel is drawn through a finger screen located in the inboard fuel tank and routed to a three position fuel selector valve and filter unit which is located aft of the main spar. The valve has OFF, LEFT and RIGHT positions which are remotely selected by means of a torque tube operated by a handle located in the pedestal. The handle has a spring loaded detent to prevent accidental selection to the OFF position. From the selector valve the fuel goes to the electric fuel pump which is also mounted aft of the main spar and then goes forward to the engine driven fuel pump which forces the fuel through the injector unit into the engine.

Refer to Figures 1, 2 or 3 for layout and relationship of the fuel system and components.

(2) Troubleshooting Fuel System

Electrical and mechanical troubles of the system are found in Chart 1. When troubleshooting, check from the power supply to the items affected. If no problem is found by this method, the trouble probably exists inside individual pieces of equipment, which may then be removed from the airplane and replaced with an identical unit or units, tested and known to be good.

CHART 1
TROUBLESHOOTING CHART (FUEL SYSTEM) (Sheet 1 of 2)

Trouble	Cause	Remedy
Failure of fuel to flow.	Fuel line blocked.	Flush fuel system.
	Fuel vent cap blocked.	Check and clean vent hole in cap.
	Mechanical or electrical fuel pump failure.	Check and replace if necessary.
	Fuel selector valve in improper position.	Reposition as required.
		Check for obstructions in the fuel selector leverage mecha nism.
	Damaged fuel selector valve.	Replace fuel selector valve.

FUEL (cont.)

A. General (cont.)
(2) Troubleshooting Fuel System (cont.)

CHART 1
TROUBLESHOOTING CHART (FUEL SYSTEM) (Sheet 2 of 2)

Trouble	Cause	Remedy
Fuel quantity gauge fails to operate.	Broken wire.	Check and repair.
	Gauge inoperative. Fuel sender float partially or completely filled with fuel.	Replace gauge. Replace sender.
	Circuit breaker open.	Check and reset.
	Float and arm assembly of fuel sender sticking.	Check.
	Bad ground.	Check for good contact at ground lip or rear of gauge.
No fuel pressure indication.	Fuel selector valve stuck.	Check fuel selector valve.
	Fuel tanks empty.	Check fuel tanks and fill.
	Defective gauge.	Replace gauge.
	Fuel selector valve in improper position.	Reposition fuel selector valve lever.
Lower pressure or pressure surges.	Obstruction in inlet side of pump. Air in line to pressure gauge.	Trace lines and locate obstruction. Bleed line.

FUEL (cont.)

A. General (cont.)

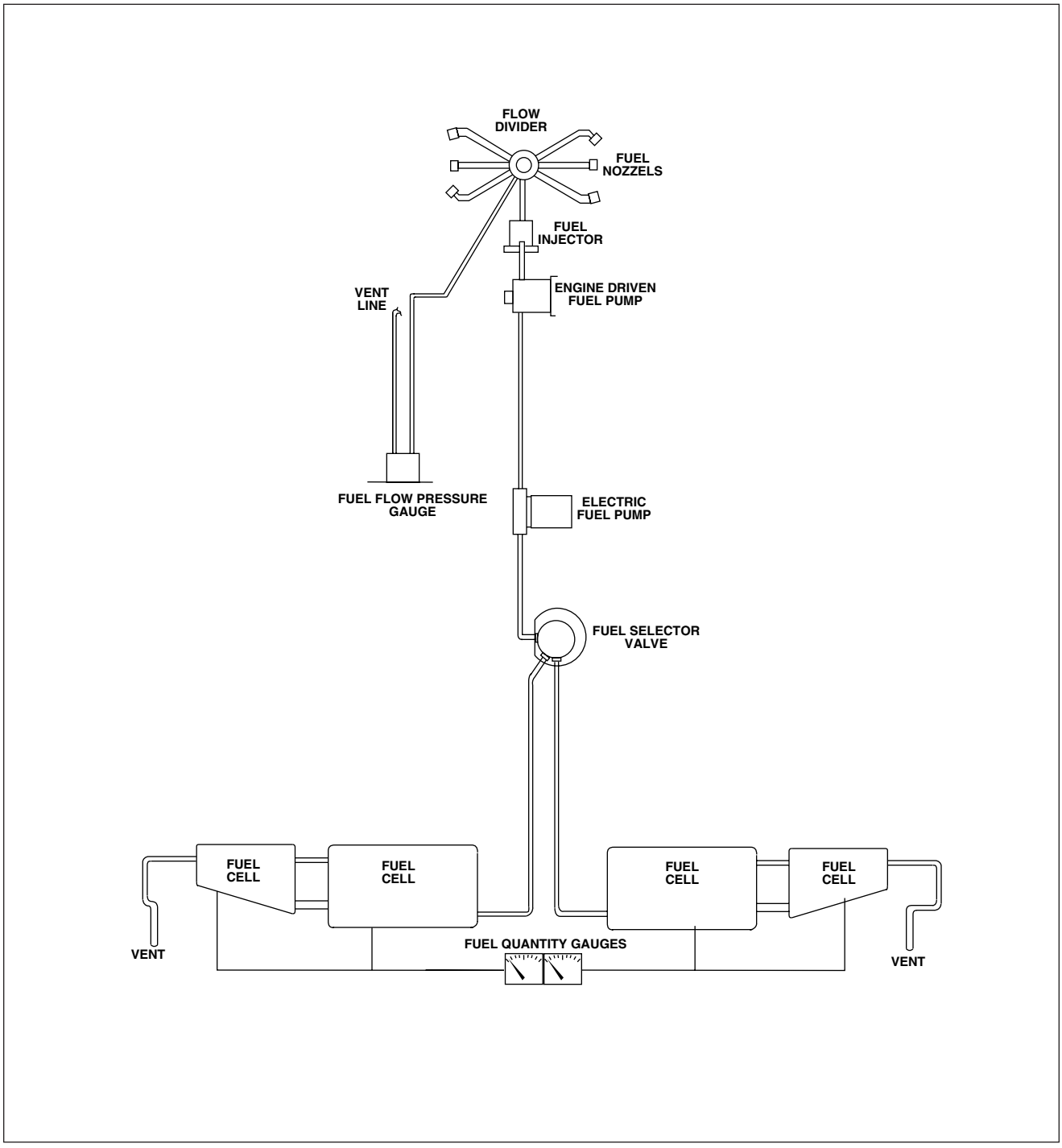

PA-32R-301 SP Fuel System (s/n's 32R-8013001 through 32R-8613005 and 3213001 through 3213041)
Figure 1

FUEL (cont.)

A. General (cont.)

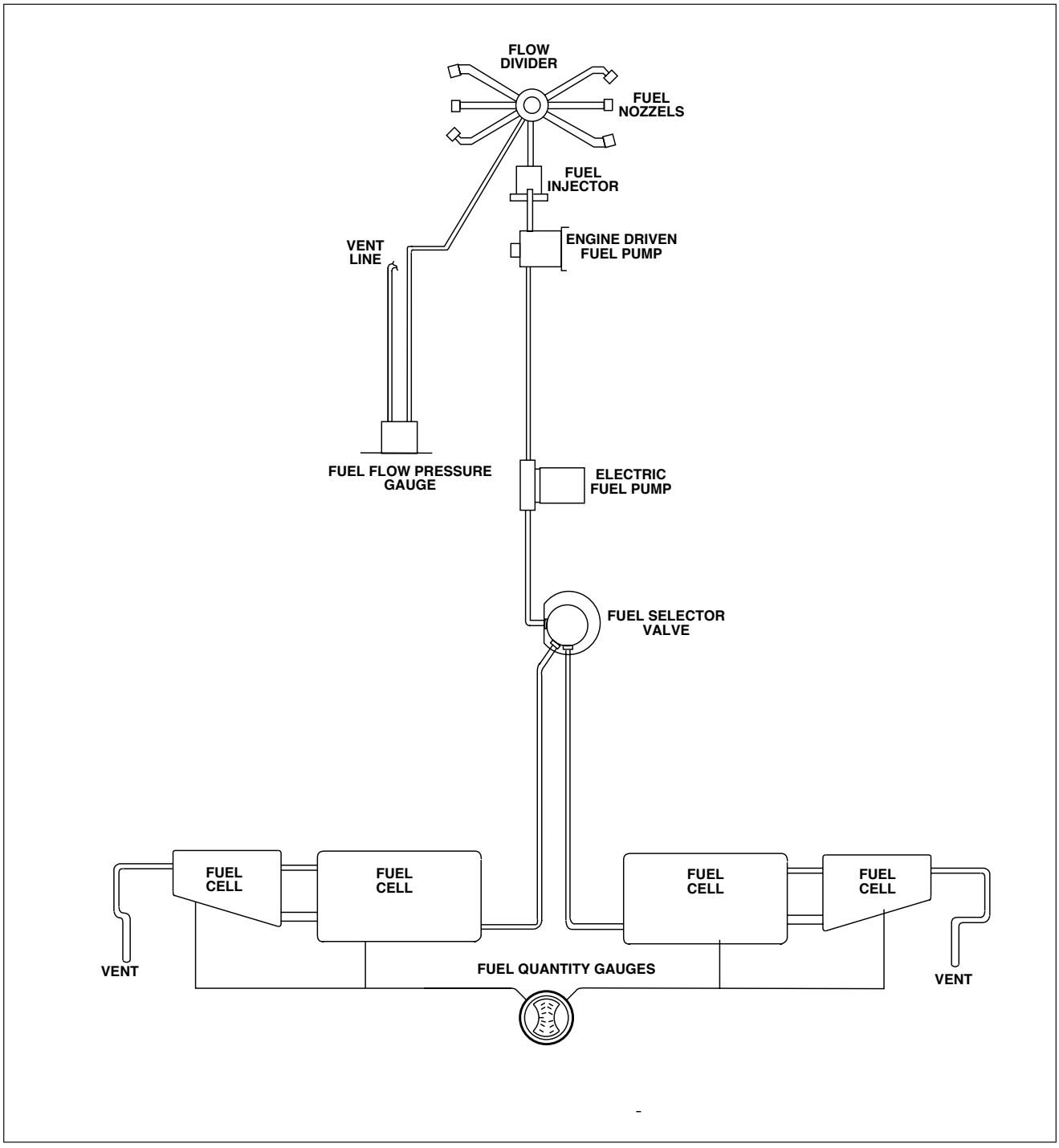

PA-32R-301 HP Fuel System (s/n's 3213029, 3213042 and up)
Figure 2

FUEL (cont.)

A. General (cont.)

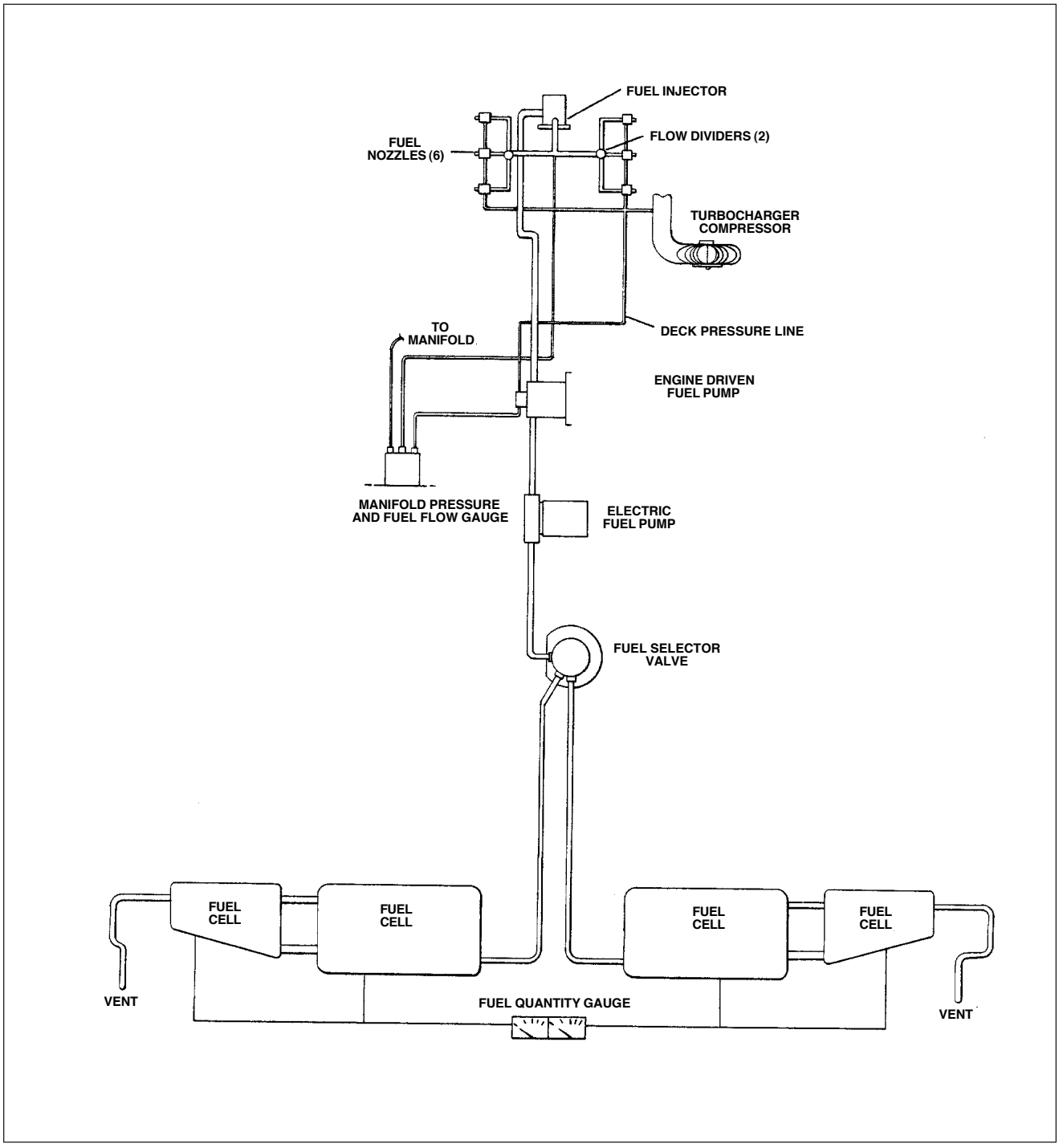

PA-32R-301T Fuel System
Figure 3

PAGE INTENTIONALLY LEFT BLANK

FUEL STORAGE

A. Aluminum Fuel Tanks Inspection and Repair

– WARNING –

If drain valves are removed to drain tanks, apply Parker Hannifin thread lube, Piper code no. 913 224, to male pipe threads before installing. Do not allow lubricant to enter fuel system.

Completely drain fuel tanks. (Refer to Draining Fuel Systems, Chapter 12.) Inspect each tank for signs of leaks as indicated by telltale stains. If a fuel leak is detected, remove fuel tank and repair as follows: (Refer to Repair of Fuel Cells for repairing bladder-type outboard tanks.)

– WARNING –

Sloshing of fuel tanks not approved

(1) If tank has previously been sloshed, use a mirror and inspection light inserted through the filler neck to inspect tank interior for signs of peeling or chipping sealer. If peeling and/or chipping has occurred, and separated material is found, sloshing material must be completely removed or tank replaced.
(2) Seal leaks with Products Research Corporation PR 1422A series or PR1433G series sealant. For example: PR1422A1

B. Inboard Fuel Tank Removal
(1) Completely drain fuel from tank.
(2) Remove cover from access hole located on underside of wing between wing stations 88.75 and 115.95.
(3) Loosen clamps at hose connections on fuel line and fuel vent line. Slide hose connections away from fuel tank.
(4) Disconnect fuel line on inboard side of tank.
(5) Remove screws from around perimeter of the tank. Carefully pull tank away from wing far enough to gain access to/and remove sender wire.
(6) Remove tank.

C. Inboard Fuel Tank Installation
(1) Position fuel tank in wing recess. Connect fuel sender wires. Slide tank completely into position. Secure with screws around its perimeter.
(2) Through access hole located on underside of wing:
  (a) Slide hose on interconnecting fuel line.
  (b) Slide fuel vent line into position.
  (c) Tighten clamps on both lines.
(3) Connect fuel line on inboard side of tank.

FUEL STORAGE (Cont.)

C. Inboard Fuel Tank Installation (cont.)
(4) Fill fuel tanks and check for:
(a) Leaks
(b) Unrestricted fuel flow
(c) Accurate sender indications on fuel quantity gauge.
(d) Ground wire is securely atached to interconnecting fuel line, fuel vent line, and wing rib at wing station 88.75.

D. Outboard Fuel Cell Removal (Refer to Figure 4.)
(1) Drain fuel cell as described in Chapter 12.
(2) Remove the access covers located on bottom of wing at wing stations 111.8, 165.5, and 129.3.
(3) Remove the twelve screws securing fuel cap adapter assembly to upper wing surface (wing station 140.09). Remove adapter assembly.
(4) Remove four screws securing fuel cell and nut ring and gasket to the top of wing. Remove nut ring and gasket.
(5) Utilizing access opening at wing station 165.5, loosen the two clamps which secure fuel vent line and fuel vent valve assembly in fuel cell nipple.
(6) Carefully separate \fuel vent line from fuel cell nipple.
(7) Reach in fuel cell and remove fuel vent valve assembly from fuel cell nipple.
(8) Utilizing access opening at wing station 111.8, loosen clamps securing fuel cell to upper and lower fuel interconnecting lines. Separate interconnecting lines from fuel cell.
(9) Working through access opening at wing station 129.3 (lower wing surface), disconnect electrical wire from fuel sender unit terminal. Remove the five bolts securing fuel sender unit and remove sender unit from fuel cell.
(10) Inserting arm between fuel cell and top of wing, separate velcro strips which hold fuel cell in place.
(11) Fold fuel cell into a manageable form and withdraw it through the access opening at top of wing.

E. Molded Nipple Fittings Installation

The lightweight molded nipple fitting was developed for ease of installation. To receive the best service from this type fitting, it is necessary to exercise certain precautions during installation.

(1) Unless otherwise specified, insert tubing into fitting until end is flush with inside edge of nipple.
(2) Hose clamp must clear end of fitting by 1/4 inch where possible.
(3) Locate hose clamp on fabric reinforced area of nipple.
(4) Do not use sealing paste or gasket compound.
(5) Use lightweight motor oil to facilitate insertion of tubing into nipple.

F. Fuel Cell Compartment
(1) Clean compartment thoroughly of all filings, trimmings, loose washers, nuts, bolts and etc.
(2) Round off all sharp edges. Where this is not possible tape over all sharp edges or rough rivets.
(3) Inspect compartment for cleanliness and condition prior to installation of fuel cell.

FUEL STORAGE (Cont.)

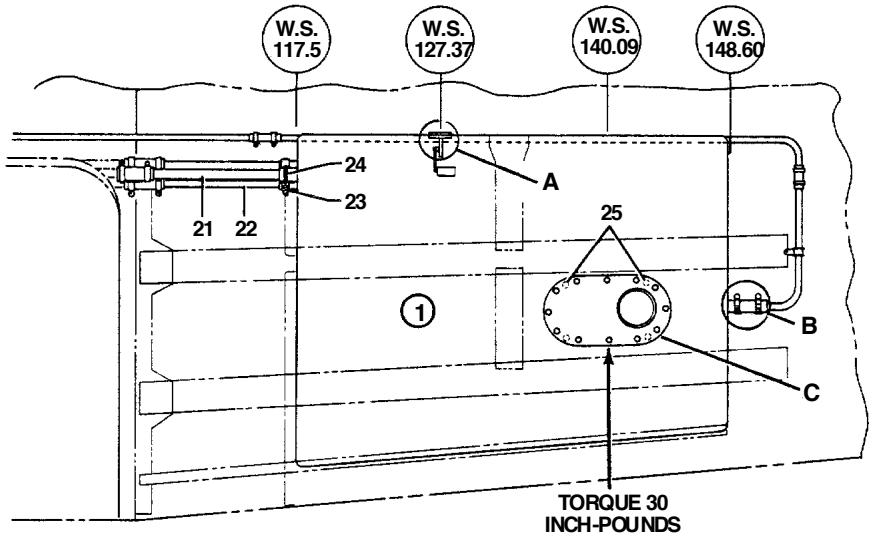

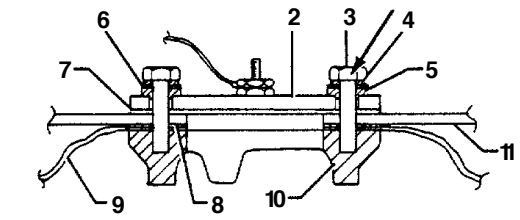

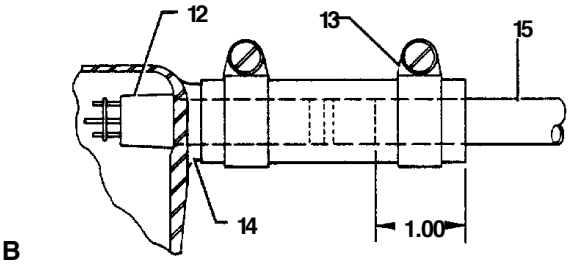

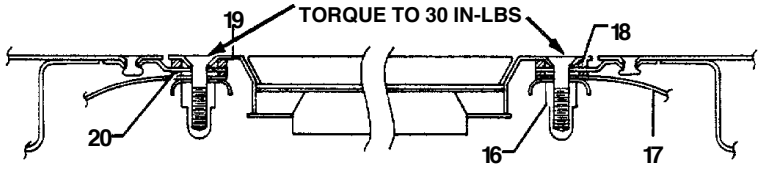

1. FUEL CELL
2. FUEL SENDER UNIT
3. AN3-6A BOLT. TORQUE TO 25 IN.-LBS.
4. AN935-10 LOCKWASHER
5. INSULATING WASHER
6. AN960-10 7.WASHER
7. NEOPRENE GASKET
8. CORK GASKET
9. FUEL CELL
10. NUT RING
11. SPAR
12. FUEL VENT VALVE ASSEMBLY
13. #10HL CLAMP. TORQUE 12 -16 IN.-LBS.
14. NIPPLE
15. FUEL VENT LINE
16. NUT RING
17. FUEL CELL
18. GASKET
19. FUEL CAP ADAPTER ASSEMBLY
20. GASKET
21. FUEL VENT INTERCONNECT LINE
22. FUEL TANK INTERCONNECT LINE
23. #32HL CLAMP. TORQUE 30 - 35 IN.- LBS.
24. #12HL CLAMP. TORQUE 15 - 20 IN.- LBS.
25. SCREWS (12)

Fuel Cell Components
Figure 4

FUEL STORAGE (Cont.)

G. Cleaning of Fuel Cells
   1. New fuel cells kept in their shipping containers should not require cleaning prior to installation. If a cell should becomes dirty, clean with soap and warm water to.
   2. Prior to removal, a used cell should be drained, purged with fresh air and swabbed out to remove all traces of fuel. Upon removal the cell should be cleaned throughly with soap and warm water.

H. Inspection of Fuel Cells.
   (1) Inspect fuel cells during regularly scheduled airplane maintenance inspections.
   (2) Inspect interior of each cell for cracking, porosity or other signs of deterioration.
   (3) Inspect nipple as follows:
      (a) Attempt to scrape the rubber off the nipple fitting with a fingernail . If rubber has not degraded, the fingernail will glide across rubber without damage to the rubber. If an unsatisfactory condition exists, the fingernail will dig into the rubber.
      (b) Deteriorated rubber has consistency of either art gum or chewing gum. Usually it will have changed from a light tan color to a dark reddish-brown, bluish or greenish color, depending upon the color of fuel used.
   (4) Replace any cell found seeping or with soft nipples.

I. Handling and Storage of Fuel Cells
   (1) Do not remove fuel cells from shipping container until time of installation.
   (2) After removing fuel cell from its shipping container, inspect cell for damage due to crating or removal from crate.
   (3) Do not use fuel cell nipple fittings as handholds. Do not drag fuel cells.
   (4) Stack fuel cells only in original shipping containers.
   (5) Prior to storing used fuel cells, clean with soap and warm water.
   (6) Fold fuel cells smoothly and loosely with a minimum number of folds. Protective wadding should be placed between folds.

– CAUTION –

Should the temperature be below 70° F move the cells to a warmer storage location.

   (7) Store fuel cells in a dry area protected from sunlight. Recommended storage temperature is 70° F.

J. Repair of Fuel Cells (Refer to Chart 2.)

The following is a repair procedure recommended for field repair of fuel cells constructed of Goodyear Vithane material. There are two methods by which these repairs may be accomplished. One method is by heat cure; the other is air cure. The end result of either repair is a neat, permanent repair. The heat repair allows the cell to be cured and ready for reinstallation in two hours; while the air cure method requires that the cell not be moved for 72 hours during the air cure period.

– NOTE –

Air cure repairs are to be made at a room temperature of approximately 75°F. For each 10°F drop in temperature, add 20 hours cure time. For instance, if the room temperature reads 65°F, air cure for 92 hours instead of 72 hours.

FUEL STORAGE (Cont.)

J. Repair of Fuel Cells (Refer to Chart 2.) (cont.)

CHART 2
FUEL CELL REPAIR EQUIPMENT LISTS

Repair Kit, Goodyear Part No. 2F1-3-37813		
GROUP I MATERIALS		
80C27 Repair Cement	8	Pint cans 320 gms in each
80C28 Cross-Linker	8	14 oz bottles 81 cc in each
Methylethylketone	2	1 pint cans
FT-192 Repair Fabric	2	Sheet 12 x 12
AP368 Manual	1	
GROUP II MATERIALS		
The following equipment is necessary to perform the repair.		
Group II equipment will be furnished at additional cost, if ordered by customer.		
Foam Rubber Cloth Sheet, 1/4 x 12 x 12	2	
Paint Brush, 1 inch wide	2	
Aluminum Plates, 1/4 x 6 x 6	4	
Measuring Cup (250 ml)	1	
Cellophane (Sheet 12 x 24)	2	
NOTES		
Accessories - order per individual cell requirements.		
Phenol plates, phenol plate assemblies and phenol test equipment can be ordered as required from cell manufacturer.		
Alodine 1200 to be ordered as required from cell manufacturer.		
Cure Iron (Set 240°F) Optional.		

(1) Handling of Repair Materials

(a) Protect all materials from dirt contamination, sunlight, and excessive heat or cold while in storage. Keep containers tightly capped and stored at a temperature of 70°F.

– NOTE–

80C27 repair cement requires thorough mixing to obtain full adhesive values.

(b) The repair code 80C27 referred to in this text is prepared immediately prior to use by mixing repair cement 90C27 (pint can with 320 gms) with cross-linker 80C28 (4 oz. bottle with 81cc).

FUEL STORAGE (Cont.)

(1). Handling of Repair Materials (cont.)

– CAUTION –

All containers for cements and solvents should be properly identified.

(c) Repair cement has a pot life of 20 minutes after mixing. The unmixed 80C27 and 80C28 have a shelf life of six months from the date of packaging.

(2) Repair Procedures of Goodyear Vithane Fuel Cells

– NOTE –

The repair of Goodyear Vithane fuel cells is restricted to authorized personnel. Authorized personnel are those who have been certified and trained by Goodyear representatives, or those who have received their training from persons who have been certified and trained by Goodyear representatives.

(3) Fuel Cells Repair Limitations

(a) FT-192 repair fabric is for repair of simple contours only. Patches referred to in this text are of this material.
(b) Inside patches are to lap defect edges a minimum of 1.0 inches in each direction.
(c) Outside patches are to lap defect edges 0.25 to 0.50 inches inside patches.
(d) Outside patches are to be applied and cured prior to applying an inside patch.
(e) Blisters between inner liner and fabric larger than 0.25 of an inch in diameter require an outside and an inside patch.
(f) Separations between layers or plies larger than 0.50 inch in diameter require an outside and inside patch. Holes and punctures require an outside and inside patch.
(g) Slits or tears up to 6.0 inches maximum length require an outside and inside patch.
(h) External abraded or scuffed areas without fabric damage require an outside patch only.
(i) A loose edge may be trimmed provided a 0.50 inch minimum lap or seam is maintained.

– CAUTION –

For each 10°F drop in temperature from 75°F, add 20 hours cure time. For example: at 65°F, cure for 92 hours.

(j) Air cure repair patches are to remain clamped and undisturbed for 72 hours at a room temperature of approximately 75°F.
(k) All heat cured patches are ready for use when cool.
(l) Fitting repairs are confined to loose flange edges, seal surface rework and coat stock.
(m) The maximum number of heat cure repairs in the same area is four.

– NOTE –

Damaged fuel cells, not covered by the above procedures, should be returned for repair to: Engineered Fabrics Corporation, 669 Goodyear Street, Rockmart, Georgia 30153.

FUEL STORAGE (Cont.)

(4) Heat Cure Repair Patch Method

(a) Prepare the exterior cell wall and exterior patch.

1 Cut a repair patch from FT-192 material to size required to insure a proper lap over injury in all directions. (See Limitations.)

a Hold shears at an angle to produce a beveled edge (feather) on patch. (Dull side or gum contact face of repair patch should be largest surface after beveling.)

b Round corners of patch.

2 Wash one square foot of cell wall surrounding injury with a clean cloth soaked with Methylethylketone solvent.

3 Wash repair patch contact side with a clean cloth soaked with Methylethylketone solvent

4 Abrade cell wall surface about the injury and on the contact side of patch with fine emery cloth to remove the shine.

5 Repeat Methylethylketone washings two more times, for a total of three washings for each surface.

6 Tape a 8'' x 8'' piece of cellophane inside the cell over the injury.

(b) Position cell for patch application on repair table

(c) Mix the 80C27 cement (320 gms) with the cross-linker 80C28 (81cc), and stir mixture thoroughly, for five minutes.

– NOTE –

Cement must be at a minimum of 70°F before mixing. Keep away from water and excessive heat.

(d) Brush one even coat of mixed repair cement on the cell wall around the injury and on the contact side of the repair patch. Allow to dry for fifteen minutes.

– CAUTION –

Do not use the first can of mixed cement for second coat.

(e) Repeat a second mixing of repair cement and brush a second coat.

– CAUTION –

Make sure cellophane inside cell over injury remains in place because cement will stick cell walls together without it as a separator.

(f) After cement has dried approximately five minutes, center patch over injury.

1 Lay patch by rolling it down on surface from ***center*** to ***edge*** without trapping air.

2 Hold unrolled portion of repair patch off cemented surface until roller contact insures an air-free union.

3 The patch may now be moved by hand on the wet surface to improve lap. ***Do not lift repair patch, slide it***.

FUEL STORAGE (Cont.)

(4) Heat Cure Repair Patch Method (cont.)

(g) Using two aluminum plates larger than patch:

1 Cover one smooth surface of each plate with fabric-backed airfoam, fabric side out. Foam must cover edges of plate for protection.

2 Tape airfoam in place.

(h) Using a cellophane separator to prevent cement from sticking in the wrong place:

1 Fold cell adjacent to patch and place one prepared plate over repair patch.

2 Place second prepared plate outside of bladder opposite patch.

– CAUTION –

Make sure that cell fold is not clamped between plates. This would cause a hard permanent crease. Also make sure that the patch does not move when clamp is tightened.

(i) Center repair iron 2F1-3-25721-1 on plate over repair patch. Secure assembly with a "C" clamp. Tighten by hand. Check cement flow to determine pressure.

(j) Connect repair iron into 110-volt current and cure repair for two hours.

(k) After curing, unplug repair iron and allow it to cool to touch. Remove "C" clamp. Wet cellophane to remove it from repair.

– CAUTION –

Applying both an outside and inside repair patch simultaneously not recommended.

(l) After outside patch has been cured, apply inside patch using same procedure as above, except for side of repair patch (see Limitations, paragraph J, (3).

– CAUTION –

For each 10°F drop in temperature from 75°F, add 20 hours cure time. For example: at 65°F, cure for 92 hours.

(5) Air Cure Repair Patch Method

Follow procedure for heat cure method, except omit repair iron. Cure each patch per air limitations (minimum 72 hours), undisturbed at 75°F.

K. Accessory Replacement

(1) Obtain a cured repair accessory from cell manufacturer.

(2) Mark location of old accessory. Preserve markings for guide lines to locate new part.

(3) Remove old accessory by gradually loosening an edge with a blunt probe-like instrument.

(4) When a loose edge is created, grasp the accessory by loose edge with pliers and gently peel it off cell wall. Be careful not to pull cell lap open while peeling accessory off. Pull from blind side of a cell lap toward the exposed edge.

FUEL STORAGE (Cont.)

K. Accessory Replacement (cont.)
(5) Buff cell surface under accessory with emery cloth to smooth roughness and prepare for cement.

– NOTE –

Removal of the old accessory will probably leave an uneven cavity and surface.

(6) Prepare replacement accessory by buffing and washing contact surface. Also wash the cell surface (see paragraphs J, (4), (a), 2 and 3.)
(7) Apply mixed 80C27 repair cement to both surfaces being sure to level cavity left by removal of old accessory.
(8) Roll new accessory into place as with a repair patch. Place suitable padded plates in position to insure adequate pressure when clamped. Use a cellophane separator to prevent the cement from sticking in the wrong place [see paragraphs J, (4) (g) and (h)].
(9) Cure by either heat cure or air cure method.

L. Fuel Cell Defect Repairs
(1) Blisters:
(a) Remove loose material by trimming.
(b) Apply an outside and inside repair patch.
(2) Holes, Punctures, Cuts, Tears and Deep Abraded Areas:
(a) Trim away any ragged material
(b) Apply an outside and inside repair patch.
(3) Loose Seams:
(a) Buff loose edges and contact surfaces with emery cloth.
(b) Wash three times with Mehtylethylketone.
(c) Apply 80C27 mixed cement in two coats as with a repair patch.
(d) Clamp and cure. Cure by either heat cure or air cure method.
(e) Loose seams may be trimmed if a minimum lap remains.
(4) Loose Fitting Flange - Inside:
(a) Buff the edge of the flange and the contact surface under the flange.
(b) Apply 80C27 mixed repair cement, cellophane, padded plates and clamp.
(c) Follow procedure as outlined for repair patch.
(5) Looseness Against Metal:
(a) Prepare metal as per metal fitting - sealing surfaces.
(b) Apply 80C27 mixed cement and cure.

M. Testing Fuel Cells

Use either of the following procedures detect leaks in bladder cells:

(1) Soap Suds Test:
(a) Attach test plates to all fittings.
(b) Inflate the cell with air to a pressure of 1/4 psi ***maximum***.
(c) Apply a soap and water solution to all repaired areas suspected of leakage. Bubbles will appear at any point where leakage occurs.
(d) After testing, remove all plates and wipe soap residue from the exterior of the cell.

FUEL STORAGE (Cont.)

M. Testing Fuel Cells (cont.)

(2) Chemical Test:

– NOTE –

The chemical test is the more sensitive and preferred test.

(a) Attach a test plate to all fitting openings except one.
(b) Make up a Phenolphthalein solution as follows:
1 Add 40 grams Phenolphthalein crystals in 1/2 gallon of Ethyl Alcohol and mix, then;
2 Add 1/2 gallon of water.
(3) Pour ammonia on an absorbent cloth in the ratio of 3 ml per cubic foot of cell capacity. Place ammonia saturated cloth inside the cell.
(4) Install remaining test plate to opening used to insert ammonia saturated cloth.
(5) Inflate cell with air to a pressure of 1/4 psi ***maximum***. Cap and maintain pressure for fifteen minutes.
(6) Soak a large white cloth in phenolphthalein solution. Wring it out thoroughly. Spread cloth smoothly on outer surface of cell. Press cloth down to insure detection of minute leaks.
(7) Check cloth for red spots, which indicate a leak. Mark any leaks found and move cloth to a new location. Repeat procedure until entire exterior surface of cell has been covered. Red spots appearing on cloth may be removed by resoaking cloth in phenolphthalein solution.
(8) Phenolphthalein solution and test cloth are satisfactory only as long as they remain clean. Any phenolphthalein solution that is not in immediate use should be stored in a closed rust proof container to prevent evaporation and deterioration.
(9) After test, remove all plates and test equipment. Allow cell to air out.

(3) In conducting either test outlined above, the cell need not be confined by a cage or jig, providing the 1/4 psi pressure is not exceeded.

N. Outboard Fuel Cell Installation (Refer to Figure 4, page 28-9, grid 2D16.)
(1) Inspect cell compartment as explained in the paragraph F, “Fuel Cell Compartment”.
(2) Do not use sharp tools such as screwdrivers, files, etc. for installation purposes.
(3) Roll cell into a shape and size which can be inserted through access opening of the cell compartment.
(4) Place cell within cell compartment. Unroll and establish correct relationship of cell to compartment.
(5) Secure cell by pressing velcro strips of fuel cell against velcro strips of cell compartment.
(6) Using appropriate access opening in bottom of wing, install fuel sender unit as shown in Figure 4, View “A”.
(7) Reaching into fuel cell, place fuel vent valve assembly in place in fuel cell vent nipple. Secure with clamp installed through appropriate access opening in bottom of wing. Torque clamp 12-16 inch - pounds.
(8) Insert fuel vent line one inch into fuel cell vent nipple and secure with clamp. Torque clamp 12-16 inch - pounds.

FUEL STORAGE (Cont.)

N. Outboard Fuel Cell Installation (Refer to Figure 4, page 28-9, grid 2D16.) (cont.)

(9) Insert fuel interconnect lines into appropriate fuel cell openings and secure with clamps. Torque 3/4 inch fuel vent interconnect clamp (12HL) 15-20 inch - pounds. Torque 2 inch fuel tank interconnect clamp (32HL) 30-35 inch - pounds.

(10) Align holes of cork gasket, fuel cell, and nut plate. Secure with four screws. Torque 12-15 inch - pounds..

(11) Using a clean soft lint-free cloth, wipe inside of cell clean of all dirt and foreign material. Inspect for cleanliness.

(12) Install a new gasket and fuel cap adapter assembly. Coat each of the twelve screws' threads with PR 1422 CL2 sealant. Install screws and torque from 20 to 25 inch-pounds. After torquing, clean screws with MEK solvent.

(13) Fill fuel tanks and check for leaks, unrestricted fuel flow, and proper fuel level indication.

(14) Install access covers.

O. Fuel System Inspection

Fill tanks with fuel. Inspect tanks and fuel line connections for leaks.

(1) If fuel tanks leak, follow instructions given in Aluminum Fuel Tanks Inspection and Repair.

(2) If fuel line connections leak tighten clamps.

(3) If fuel line connections continue to leak:

(a) Drain tanks.

(b) Replace hose connections.

P. Locking Fuel Cap (Refer to Figure 5)

The locking fuel cap is an optional equipment item. When the optional locking fuel cap is installed, the optional ignition and door lock kit is also installed, thereby allowing the use of one key to operate all of the locks.

(1) Disassembly of Locking Fuel Cap

(a) Remove the two screws from top of fuel cap.

(b) Remove screw and lock washer that secures pawl to bottom of key lock. Remove pawl.

(c) Remove nut that secures key lock to cover.

(d) Slide lock, gaskets, and spring over back of key lock.

(e) Remove key lock by pushing keylock through cover. Ensure that the O–ring is not lost.

(2) Assembly of Locking Fuel Cap

(a) Insert key lock through cover. Make sure that O–ring gasket is installed under head of key lock.

(b) Slide spring, gaskets, and lock over back of key lock.

(c). Install nut that secures key lock to cover.

(d) Apply loctite #211 or #680 to screw threads primed with locquic "N" or "T". Attach pawl to back of lock assembly with screw and lock washer.

(e) Apply a thin coating of PR-1422 sealant to shank and thread of the screws removed from top of cap. Install screws and lockwashers on top of fuel cap.

FUEL STORAGE (Cont.)

P. Locking Fuel Cap (cont.)

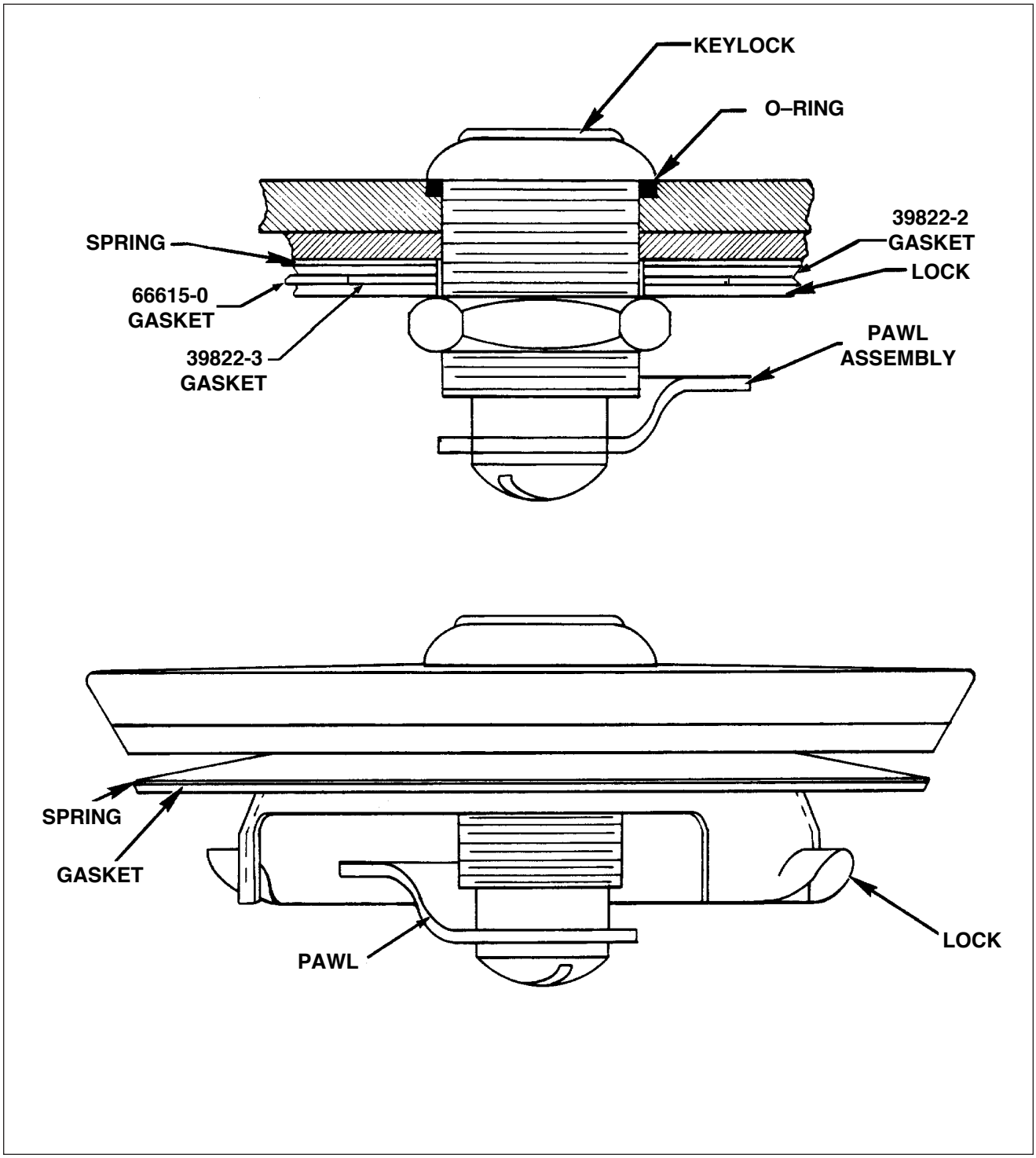

Locking Fuel Cap Assembly
Figure 5

`INTENTIONALLY LEFT BLANK

INTENTIONALLY LEFT BLANK

DISTRIBUTION

A. Fuel Selector Valve

When the fuel selector handle is not in a positive selector detent position, more than one fuel port will be open at the same time. Ensure that the fuel selector is positioned in a detent, which can be easily felt when moving the handle through its various positions.

(1) Fuel Selector Valve and Filter Removal.
  (a) Drain fuel from tanks. (Refer to Draining Fuel System, Chapter 12.)
  (b) Remove center seats, seat belt attachments and floor panel just aft of main spar by removing floor attachment screws. Lift panel and remove.
  (c) Remove plate from bottom of fuselage that covers fuel selector.
  (d) Disconnect fuel lines and selector linkage from valve assembly.
  (e) Remove the four mounting screws that holds fuel selector in place. Remove selector assembly.

(2) Cleaning Filter Assembly (Refer to Figure 6)
  (a) Remove access panel to filter bowl on bottom of fuselage.
  (b) Remove fuel strainer bowl.
  (c) Remove filter disc assembly from center stem by compressing filter retainer spring and removing filter retainer washer.
  (d) Inspect bowl gasket. Replace if necessary.
  (e) Filter discs may be cleaned as follows:
    1 Plug open ends of filter disc center with stoppers to prevent dirt from entering.

– CAUTION –

Do not use acetone, methylethylketone, etc., to clean nylon filter discs.

    2 Wash metallic filter disc in acetone, gasoline, carbon tetrachloride, trichlorethylene (permachor) or Bendix cleaner. Wash nylon filter disc with soap and water.
    3 Remove stubborn deposits from filter disc with a soft bristle brush.
    4 Rinse all traces of soap solution. Drain or blow dry. Remove stoppers.
  (f) Replace the filter disc if damage is evident.
  (g) Reinstall filter disc assembly and strainer bowl.

(3) Fuel Selector Valve and Filter Installation

– NOTE –

When installing fuel selector valve, drain and flush complete fuel system and tanks to ensure no contamnation is present. (Refer to Cleaning Fuel System.)

  (a) Position the valve inside the airplane just aft of the main spar.
  (b) Secure the valve with machine screws, washers and self-locking nuts.
  (c) Connect the fuel lines.
  (d) Connect fuel selector valve linkage to insure that selector handle engages the left indent position when it is against the safety stop on the console cover.

DISTRIBUTION (Cont.)

(3) Fuel Selector Valve and Filter Installation (cont.)
(e) Fill the fuel tanks and check all connections for leaks.
(f) Install the rear seat and fuel drain placard cover.
(g) Install the access plate to the bottom of the fuselage with attaching screws.

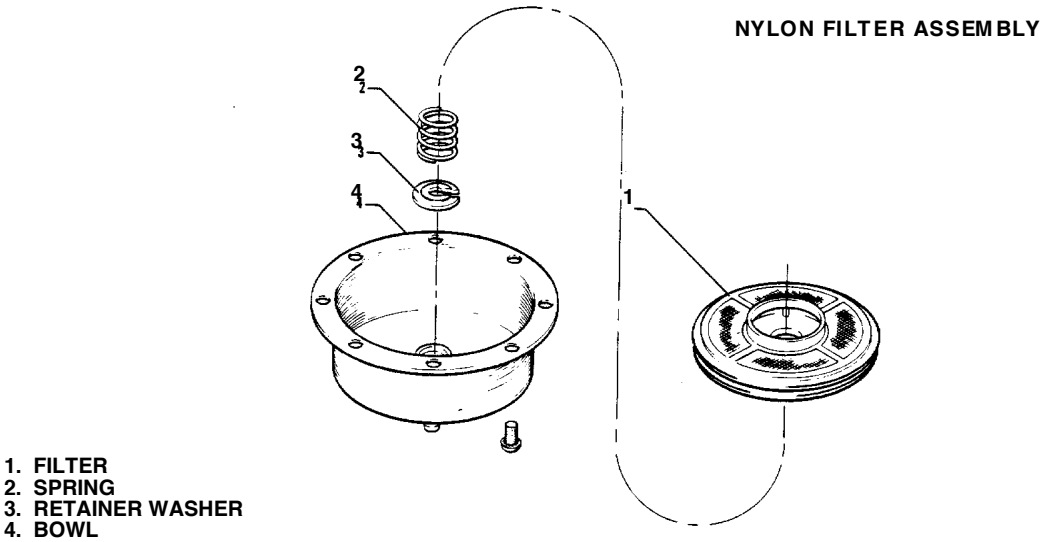

Fuel Filter Asssembly
Figure 6

B Cleaning Fuel System
(1) Remove all fuel from tanks. Drain fuel a chamois or other straining equipment to inspect for presence of foreign matter.
(2) Flush each tank should opening tank drain and adding two or three gallons of clean fuel. While fuel is draining, raise and lower airplane wing to allow the fuel to rinse any contamination remaining in tank out drain.
(3) After fuel selector valve is installed and the aircraft refueled:
(a) Disconnect fuel inlet line to injector.
(b) Turn electric fuel pump ON to flush lines.
(c) While flushing, move fuel selector back and forth from one tank to another.
(4) Make proper logbook entry.

DISTRIBUTION (Cont.)

C. Electric Fuel Pump
   (1) Electric Fuel Pump Removal
      (a) Turn fuel selector to OFF position.
      (b) Remove floor panel located directly aft of main spar by removing center seats, seat belt attachments and screws that secure panel. Lift panel and remove it from the airplane.
      (c) Disconnect electrical lead from pump.
      (d) Disconnect pump inlet and outlet lines.
      (e) On PA-32R-301T disconnect vent tube from bottom of pump.
      (f) Remove pump by removing pump attachment hardware.
   (2) Electric Fuel Pump Installation
      (a) Position pump in airplane. Secure with attachment hardware.
      (b) On PA-32R-301T connect vent tube to bottom of pump.
      (c) Connect pump inlet and outlet lines.
      (d) Install floor panel in airplane and secure with screws. Install center seats and seat belt attachments.
      (e) Set fuel selector to desired position.

PAGE INTENTIONALLY LEFT BLANK

INDICATING

A. Fuel Quantity Sender Unit

(1) General

Inboard and outboard fuel tanks in each wing are interconnected and have a total capacity of 53.5 gallons. On PA-32R-301 SP airplanes, fuel quantity sender units mounted in each fuel tank electrically transmit the cumulative quantity of fuel in each set of tanks to two (LEFT and RIGHT) fuel quantity gauges mounted in the engine cluster on instrument panel. On PA-32R-301 II HP airplanes, the cumulative quantity of fuel in each set of tanks is read on a single fuel quantity gauge with dual (LEFT and RIGHT) indications. The gauge is mounted in the instrument panel to the left of the gear selector handle.

(2) Fuel Quantity Sender and Gauge Check

To check fuel quantity sender units and fuel quantity gauges while installed in airplane:

(a) PA-32R-301 SP and 32R-301T airplanes (refer to Figure 7):

1 Level airplane laterally and longitudinally (refer to Leveling, Chapter 8) ± 1°.

2 Place fuel selector lever in OFF position.

3 Completely drain fuel tanks that relate to fuel quantity senders and gauge to be checked. (Refer to Draining Fuel System, Chapter 12.)

– NOTE –

Measure all fuel added with a suitable device

4 Place 2.5 gallons of fuel in wing tank that relates to gauge and sender unit being checked.

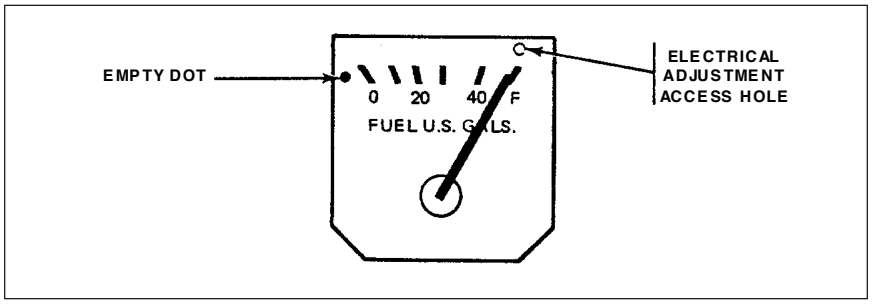

PA-32R-301 SP and PA-32R-301T Fuel Gauge
Figure 7

CHART 3
PA-32R-301 SP AND PA-32R-301T FUEL QUANTITY GAUGE/SENDER TOLERANCES

Total Fuel in Tanks [Side(s) Being Tested] Gallons	Required Gauge Reading	Tolerance (Plus or Minus) Needle Widths	Resistance (Ohms) Both Senders
12 1/2	10	2	21
22 1/2	20	2	32
42 1/2	40	2	63

INDICATING (Cont.)

(2) Fuel Quantity Sender and Gauge Check (cont.)

(a) PA-32R-301 SP and 32R-301T airplanes (cont.):

5 With 12 to 14-volts dc supplied to airplane's electrical system, fuel gauge needle should be centered on the “0” radial mark + 0. -1 1/2 needle widths. If not within this tolerance, the gauge should be replaced.

6 With 14-volts dc supplied to airplane's electrical system, and battery/alternator switch OFF, add fuel to the 2 1/2 gallons already in the tank(s) to total quantities specified in CHART 3

7 If gauge does not read within tolerances specified in CHART 3, check senders resistance specified in CHART 3

8. If necessary to adjust gauge at either the 10, 20 or 40 gallon position, recheck gauge as specified above.

(b) PA-32R-301 II HP airplanes (refer to Figure 8):

1 Level airplane laterally and longitudinally (refer to Leveling, Chapter 8) ± 1°.

2 Place battery switch in OFF position.

3 Connect external power supply to airplane using APU connector. Adjust to provide 12 to 14 Vdc.

4 Desired fuel quantities in side to be tested is obtained by either:

a Completely drain fuel tanks that relate to fuel quantity senders and gauge to be checked. Then add fuel in increments specified in CHART 4.

b With tanks completely full, defuel each tank 10 gallons at a time.

c After measured amount has been added or drained, vibrate tank by bumping lower swing surface. Vibrate gauge by tapping gauge glass with fingers.

5 If gauge does not read within tolerances specified in CHART 3, check senders resistance specified in CHART 3

6 If gauge or sender fails to meet accuracy requirements in CHART , replace gauge or sender, as applicable

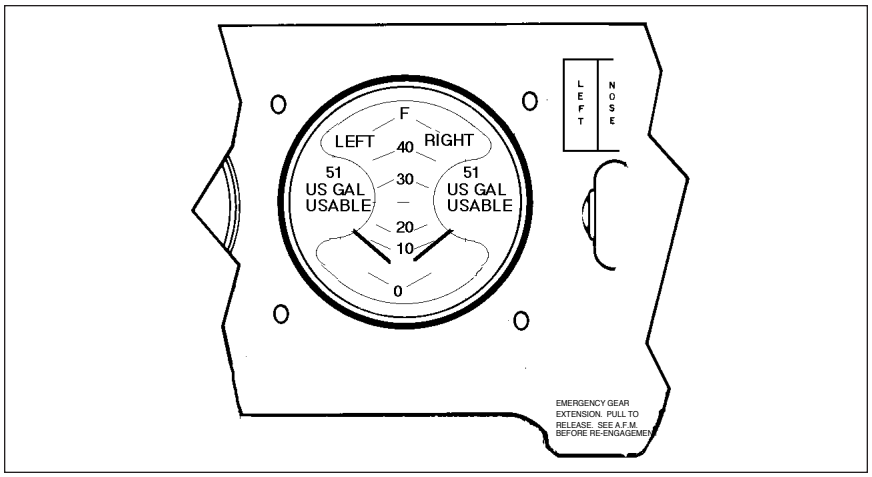

PA-32R-301 II HP
Figure 8

INDICATING (Cont.)

(2) Fuel Quantity Sender and Gauge Check (cont.)

(b) PA-32R-301 II HP airplanes (refer to Figure 8) (cont.):

CHART 4
PA-32R-301 II HP FUEL QUANTITY GAUGE/SENDER TOLERANCES

Total Fuel in Tanks [Side(s) Being Tested] Gallons	Required Gauge Reading	Tolerance (Plus or Minus) Needle Widths	Resistance (Ohms) Both Senders
2 1/2	0	+0, -1	5
12 1/2	10	± 3/4	21
22 1/2	20	± 1	32
32 1/2	30	± 1 1/2	46
42 1/2	40	± 1 1/2	63
53 1/2	F	± 1 1/2	90

PAGE INTENTIONALLY LEFT BLANK

CHAPTER

29

HYDRAULIC POWER

CHAPTER 29 - HYDRAULIC POWER

TABLE OF CONTENTS/EFFECTIVITY

CHAPTER SECTION	SUBJECT	GRID NO.	EFFECTIVITY
29-00-00	HYDRAULIC POWER	2E21	July 1, 1993
29-00-00	General	2E21	July 1, 1993
29-00-00	Description	2E21	July 1, 1993
29-00-00	Troubleshooting	2F2	July 1, 1993
29-10-00	MAIN	2F19	July 1, 1993
29-10-00	Removal of Prestolite Hydraulic Pump	2F19	July 1, 1993
29-10-00	Disassembly of Prestolite Hydraulic Pump	2F19	July 1, 1993
29-10-00	Cleaning, Inspection and Repairs of Prestolite Hydraulic Pump	2F21	July 1, 1993
29-10-00	Assembly of Prestolite Hydraulic Pump	2F22	July 1, 1993
29-10-00	Test and Adjustment of Prestolite Hydraulic Pump	2F23	July 1, 1993
29-10-00	Installation of Prestolite Hydraulic Pump	2G1	July 1, 1993
29-10-00	Removal of Oildyne Hydraulic Pump	2G1	July 1, 1993
29-10-00	Servicing of Oildyne Hydraulic Pump	2G1	July 1, 1993
29-10-00	Back-Up Landing Gear Extender Actuator Assembly	2G4	July 1, 1993
29-10-00	Removal of Back-Up Landing Gear Extender Actuator Assembly	2G4	July 1, 1993
29-10-00	Installation of Back-Up Landing Gear Extender Actuator Assembly	2G4	July 1, 1993
29-10-00	Check and Adjustment of Back-Up Landing Gear Actuator Assembly	2G7	July 1, 1993
29-10-00	Operational Check of Retractable Landing Gear System	2G9	July 1, 1993
29-10-00	Airplanes equipped ***with*** back-up gear extender	2G9	July 1, 1993
29-10-00	Airplanes ***not*** equipped with back-up gear extender	2G10	July 1, 1993
29-10-00	Removal and installation of Hydraulic Lines	2G11	July 1, 1993
29-10-00	Testing Hydraulic System	2G11	July 1, 1993
29-10-00	Servicing Hydraulic Pump/Reservoir	2G12	July 1, 1993
29-10-00	Prestolite Pump/Reservoir	2G12	July 1, 1993
29-10-00	Oildyne Pump/Reservoir	2G12	July 1, 1993

CHAPTER 29 - HYDRAULIC POWER

TABLE OF CONTENTS/EFFECTIVITY

CHAPTER SECTION	SUBJECT	GRID NO.	EFFECTIVITY

INTENTIONALLY LEFT BLANK

HYDRAULIC POWER

A. General

– NOTE –

PA32R-301 airplanes with s/n's 32R-8013001 thru 32R-8613005 and 3213001, and PA32R-301T airplanes with s/n's 32R-8029001 thru 32R-8029110, 32R-8029121 thru 32R-8629006 and 3229001 thru 3229002 may be equipped with a back-up landing gear extender. Refer to Piper Service Bulletin No. 866A

The hydraulic system components covered in this section consist of the combination hydraulic pump and reservoir, actuating cylinders and hydraulic lines. The brake system, although hydraulically operated, is not included in this section as it has its own hydraulic system independent of the gear retraction system. The brake system along with the landing gear and components is covered in Chapter 32.

– WARNING –

Prior to starting any investigation of the hydraulic system, place the airplane on jacks. (Refer to Jacking, Chapter 7.)

This chapter provides instructions for remedying malfunctions which may arise in the operation of the hydraulic system. The instructions are organized so that the mechanic can refer to: Description of the System, for a basic understanding of the system; Troubleshooting, for a methodical approach in locating difficulty; Corrective Maintenance, for the removal, repair and installation of components; and Adjustments and Checks, for the operation of the repaired system.

B. Description

– NOTE –

PA32R-301 airplanes with s/n's 32R-8013001 thru 32R-8613005 and 3213001 thru 3213019, and PA32R-301T airplanes with s/n's 32R-8029001 thru 32R-8629005 and 3229001 thru 3229003 were originally equipped with Prestolite hydraulic pumps. PA32R-301 airplanes with s/n' 3213020 and up are equipped with Oildyne hydraulic pumps. Prestolite pumps may be replaced with Oildyne pumps by using Piper kit 764 785.

Hydraulic fluid to the landing gear actuating cylinders is supplied by an electrically powered reversible pump located below the raised floor in the forward baggage compartment at station 45. A reservoir is also an integral part of the pump. The pump is controlled by the landing gear selector switch located on the instrument panel to the left of the control quadrant. As the switch is placed in either the up or down position, the pump directs fluid through the particular pressure line to each individual actuating cylinder. As fluid pressure increases at one side of a cylinder piston, fluid at the other side is directed back through the other line to the pump. Both lines serve either as pressure or return passages depending on the rotation of the pump to retract or extend the gear. (Refer to Figure 1.)

HYDRAULIC POWER (Cont.)

B. Description (cont.)

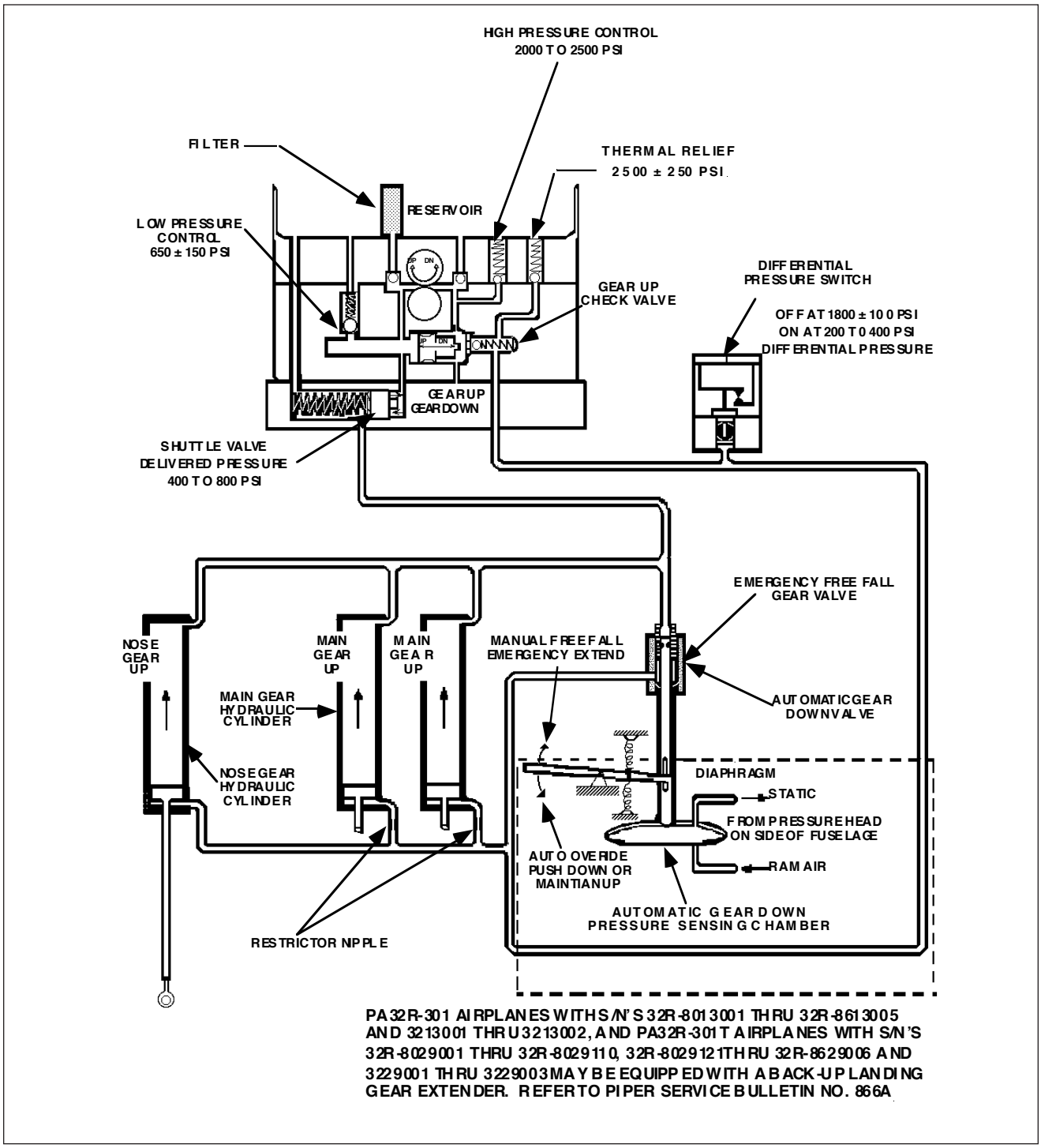

Prestolite Hydraulic System Schematic
Figure 1 (Sheet 1 of 2)

HYDRAULIC POWER (Cont.)

B. Description (cont.)

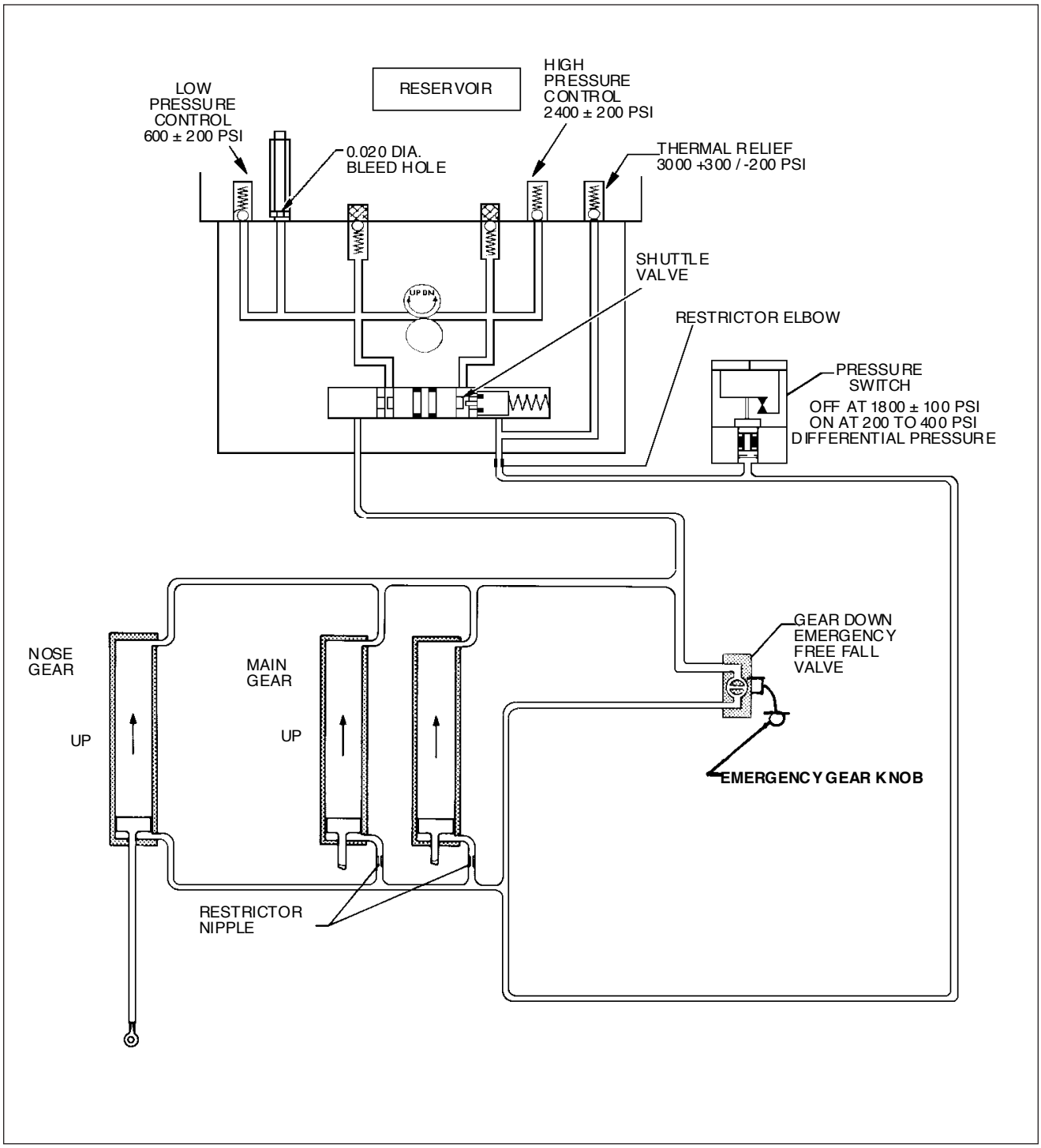

Oildyne Hydraulic System Shematic
Figure 1 (Sheet 2 of 2)

HYDRAULIC POWER (Cont.)

B. Description (cont.)

A pressure switch is installed on a cross fitting connected to the pump mount assembly. During landing gear retraction the pressure switch is the primary means to shut down the pump. This switch opens the electrical circuit to the pump solenoid when the gear fully retracts and the pressure in the system increases to 1800 ± 100 psi. As long as the gear selector handle is in the up position the switch will continue to hold the circuit open until system pressure drops to 200 to 400 psi. At that time, the pump will again operate to build up pressure to prevent the gear from free falling. The pressure switch has no effect on the system when the gear selector is in the down position.

Both the Prestolite and Oildyne hydraulic pumps are gear type units driven by a 14-volt reversible motor. designed to operate in a pressure range of 2000 to 2500 psi. To prevent excessive buildup of pressure in the hydraulic system due to expansion, a thermal relief valve is incorporated in both the Prestolite and Oildyne pumps. The Prestolite pump's relief valve will open at 2250 ± 250 psi allowing fluid to flow into the reservoir. The Oildyne pump's relief valve will open at 3000 ± 500 psi Other valves in both pumps channel fluid to the proper outlet during retraction or extension of gear. A shuttle valve located in the base of the both pumps allows fluid displaced by the cylinder pistons to return to the reservoir without back-pressure. (Refer to Figure 1 and Chart 1 for specific pressures.)

Also in the system is a by-pass or free-fall valve that allows the gear to drop should a malfunction in the pump system occur. To prevent the gear from extending too fast, there is a special restrictor nipple on the main gear retraction line. This valve is manually controlled by a lever or push-pull type cable located between the two pilot seats on the elevator trim quadrant.'

– NOTE–

Beginning with airplane s/n's 3213003 and up, Piper Aircraft no longer installs the automatic gear extender system. Piper kit, P/N 765 199, provides information concerning the removal of the backup landing gear extension system

Models that have not had the automatic backup gear extender removed, have a lever that can manually extend the gear, or allow the gear to extend automatically by the use of a backup extension device that operates by a pressure sensing mechanism that lowers the landing gear regardless of the gear selector handle position. Its operation depends on airspeed and engine power (propeller slipstream). Gear extension occurs even if the selector is in the up position, at airspeeds below approximately 103 KIAS with engine power off. The device also prevents the gear from retracting at airspeeds below approximately 81 KIAS at sea level with full power, though the selector switch may be in the up position. This speed increases with reduced power and/or increased altitude. The sensing device operation is controlled by a differential air pressure across a flexible diaphragm which is mechanically linked to the hydraulic valve and an electrical switch which actuates the pump motor. A high pressure and static air source for actuating the diaphragm is provided in a mast mounted on the left side of the fuselage above the wing. Manual override of the device is provided by an emergency gear lever located between the front seats to the right of the flap handle.

HYDRAULIC POWER (Cont.)

B. Description (cont.)

The emergency gear lever, used for emergency extension of the gear, manually releases hydraulic pressure to permit the gear to free-fall with spring assistance on the nose gear. The lever must be held in the downward position for emergency extension. This same lever, when held in the raised position, can be used to override the system, and gear position is controlled by the selector switch regardless of airspeed/power combinations. The lever must also be held in the raised position when hydraulic system operational checks are being conducted. An override latch allows the emergency extension lever to be retained in the up override position. The latch is disengaged by pulling up on the extension lever. The lever includes a centering device to return the handle to neutral, when not latched in override. An auto extension off light is mounted below the gear selector switch, and flashes to indicate whenever the latch is in use. The auto extension off light is controlled by a switch and flasher mounted behind the instrument panel.

Refer to Chapter 32, Landing Gear, for a description of the landing gear and associated electrical switches.

CHART 1
HYDRAULIC SYSTEM LEADING PARTICULARS

HYDRAULIC PUMP	HYC5005 Prestolite	Piper p/n 481 879 Oildyne
Hydraulic Pump		
High Pressure	2000 to 2500 psi	2000 ± 2000 psi
Low Pressure	650 + 150 psi	600 ± 200 psi
Flow Rate @ 1000 psi	45 cu. in. per min.	60 cu. in. per min.
Hydraulic Fluid	MIL-H-5606	MIL-H-5606
Relief Valve (Thermal)	2250 + 250 psi	3000 +300 / -200 psi
Shuttle Valve Delivered Pressure	400 to 800 psi	———
Pressure Switch		
Open (OFF) Pressure	1800 + 100 psi	1800 + 100 psi
Close (ON) Pressure	200 to 400 psi Differential pressure	200 to 400 psi Differential pressure

HYDRAULIC POWER (Cont.)

C. Troubleshooting

– CAUTION –

If equipped with automatic gear extender, prior to starting any investigation of the hydraulic system, place airplane on jacks. With airplane on jacks, pull the emergency extension lever up and latch in override position. This is required to prevent the buildup of unnecessary pressure on actuating cylinders and connecting hydraulic lines when gear is raised or lowered manually. Failure to comply with this procedure could result in the buildup of sufficient pressure to unlock the downlock mechanism allowing gear to collapse when wing jacks are removed. Prior to removing airplane from jacks, push emergency lever down, turn on master switch and select gear down. Observe that all three green lights indicating the landing gear is down and locked are energized. Turn master switch off.

Malfunctions in the hydraulic system will result in failure of the landing gear to operate properly. When trouble develops, place the airplane on jacks (refer to Jacking, Chapter 7), then proceed to determine extent of the trouble. Chart 2 lists troubles which may be encountered, along with their probable cause, and suggests a remedy for the trouble involved. A hydraulic system operational check may be conducted using Figures 1 or 2. When the trouble has been recognized, the first step in troubleshooting is isolating the cause. Hydraulic system troubles are not always traceable to one cause. It is possible that a malfunction may be the result of more than one difficulty within the system. Starting first with the most obvious and most probable reasons for the trouble, check each possibility and, in turn, by process of elimination, isolate the troubles.

– NOTE –

If equipped with a Prestolite hydraulic pump that is found to be faulty, requiring disassembly, it is recommended it be repaired by an accredited overhaul facility. If equipped with an Oildyne hydraulic pump that is found to be faulty, pump must be replaced, or returned to Piper Aircraft, via the local Piper distributor, for repairs. Pressure checks with adjustments may be accomplished in accordance with instructions given in this chapter.

HYDRAULIC POWER (Cont.)

C. Troubleshooting (cont.)

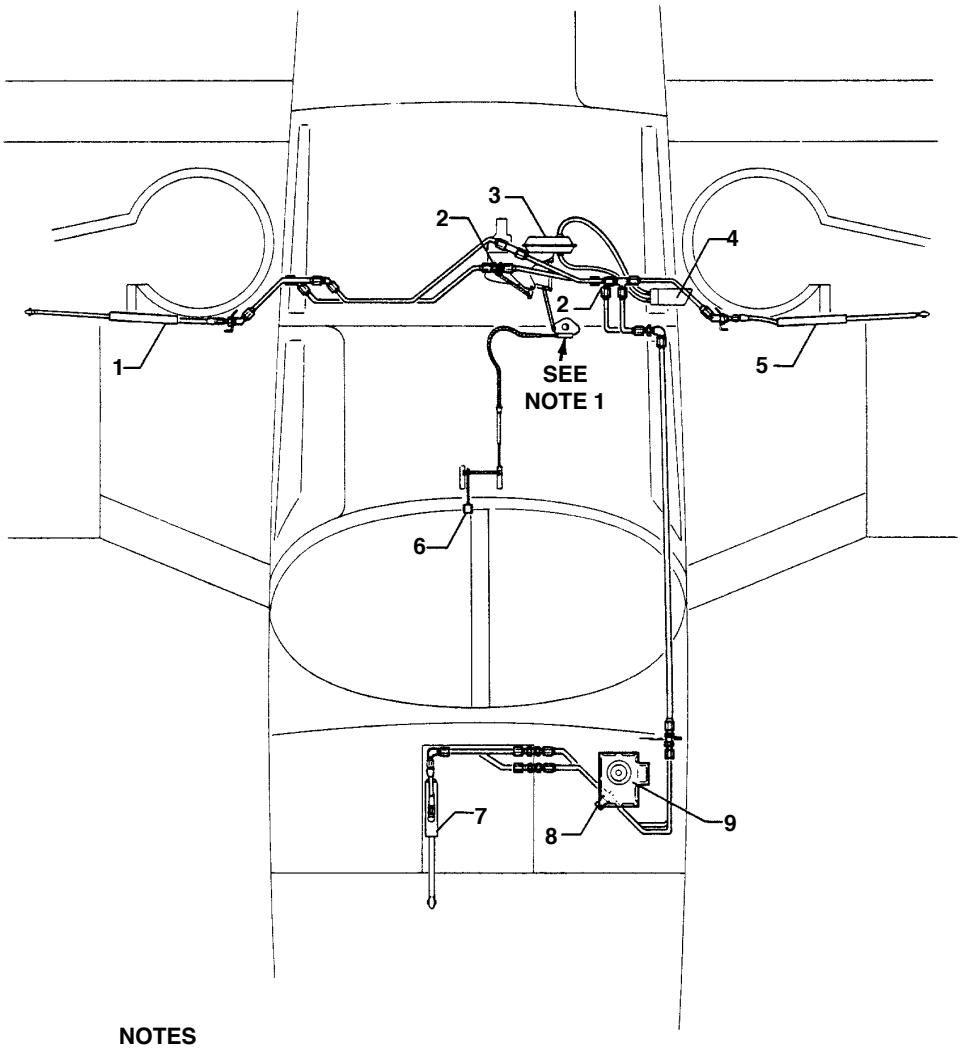

NOTES

1. **ADJUST CONNECTOR ON END OF CONTROL CABLE TO OBRTAIN 0.65 IN. MAX. DIMENSION SHOWN IN FIGURE 6.**
2. **A SPECIAL RESTRICTOR NIPPLE (2) IS INSTALLED ON THE MAIN GEAR RETRACTION LINE. DO NOT MISTAKE THIS FOR A STANDARD NIPPLE.**

1. **RIGHT ACTUATING CYLINDER**
2. **RESTRICTOR NIPPLE (SEE NOTE 2)**
3. **BACK-UP GEAR EXTENDER ACTUATOR**
4. **BACK-UP GEAR EXTENDER MAST**
5. **LEFT ACTUATING CYLINDER**
6. **EMERGENCY GEAR EXTENDER LEVER**
7. **NOSE ACTUATING CYLINDER**
8. **PRESSURE SWITCH**
9. **PUMP/RESERVOIR**

Hydraulic System With Backup Gear Extender Installation
PA32R-301 SP (S/N's 32R-8013001 thru 32R-8613005 and 3213001 and 3213002)
PA32R-301T SP (S/N's 32R-8029001 thru 32R-8029110, 32R-8029121 thru 32R-8629006, and 3229001 thru 3229003)

Figure 2 (Sheet 1 of 3)

HYDRAULIC POWER (Cont.)

C. Troubleshooting (cont.)

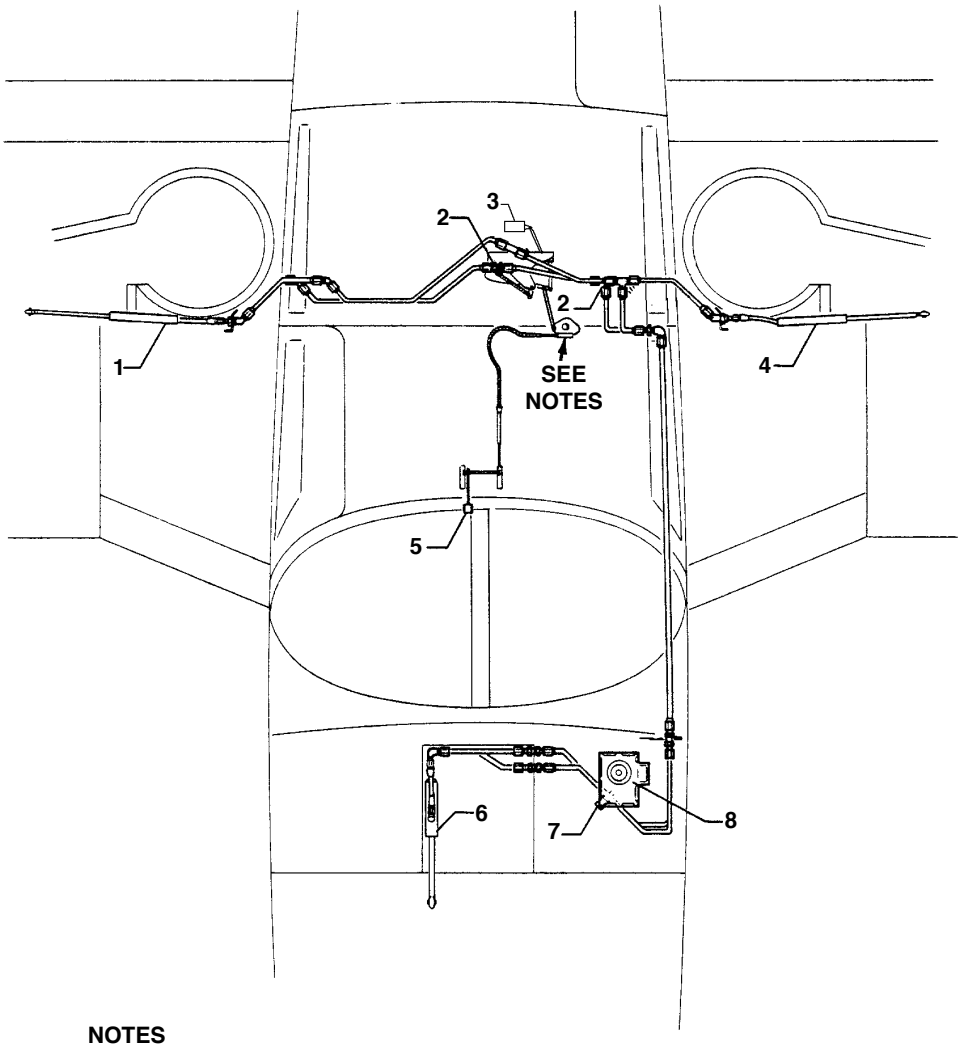

NOTES

1. **SPECIAL RESTRICTOR NIPPLE (2) IS INSTALLED ON THE MAIN GEAR RETRACTION LINE. DO NOT MISTAKE THIS FOR A STANDARD NIPPLE.**
2. **SYSTEM SHOWN WITH LANDING GEAR BACK-UP EXTENDER REMOVED. REFER TO PIPER SERVICE BULLETIN NO. 866A AND PIPER KIT P/N 765 199.**

1. **RIGHT ACTUATING CYLINDER**
2. **RESTRICTOR NIPPLE (SEE NOTE 2)**
3. **LANDING GEAR FREE FALL VALVE**
4. **LEFT ACTUATING CYLINDER**
5. **EMERGENCY GEAR EXTENDER LEVER**
6. **NOSE ACTUATING CYLINDER**
7. **PRESSURE SWITCH**
8. **PUMP/RESERVOIR**

Hydraulic System Installation With Backup Gear Extender Removed
PA32R-301 SP (S/N's 32R-8013001 thru 32R-8613005 and 3213001 and 3213002)
PA32R-301T SP (S/N's 32R-8029001 thru 32R-8029110, 32R-8029121 thru 32R-8629006, and 3229001 thru 3229003)

Figure 2 (Sheet 2 of 3)

HYDRAULIC POWER (Cont.)

C. Troubleshooting (cont.)

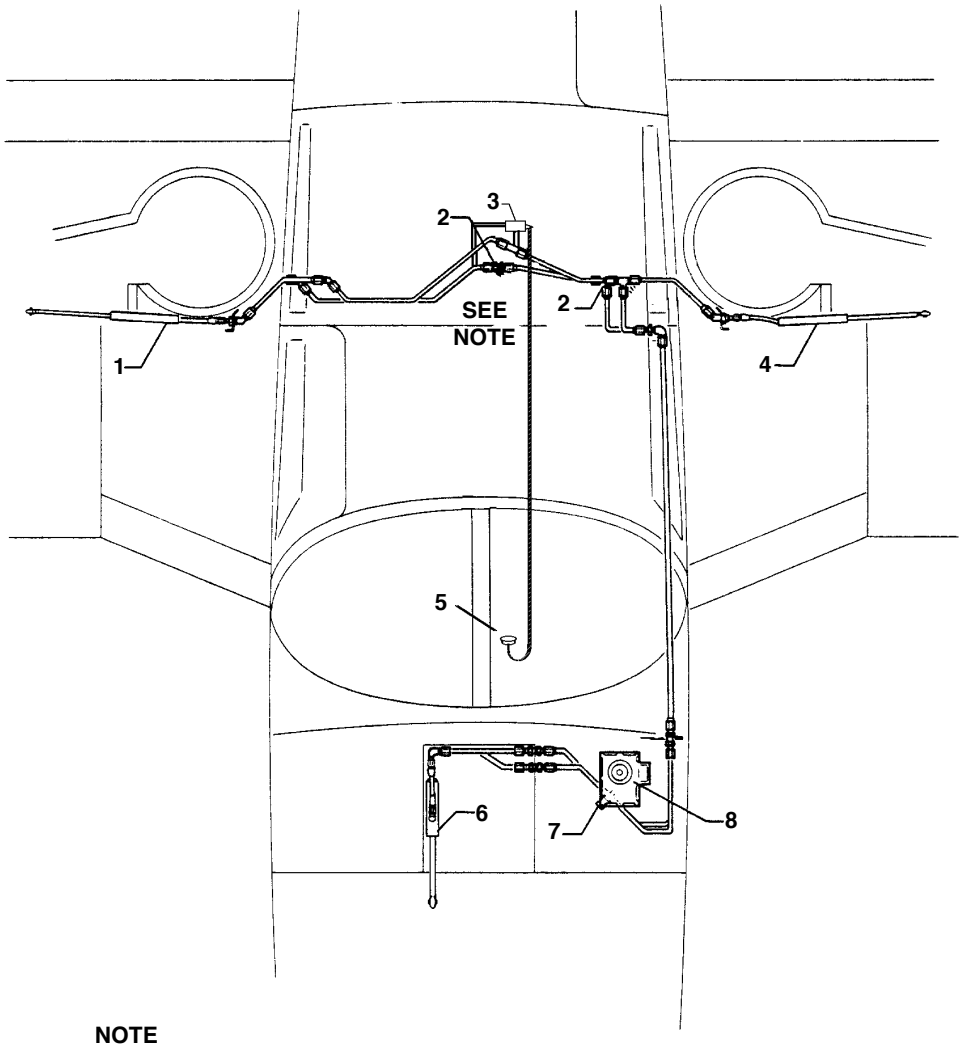

NOTE

SPECIAL RESTRICTOR NIPPLE (2) IS INSTALLED ON THE MAIN GEAR RETRACTION LINE. DO NOT MISTAKE THIS FOR A STANDARD NIPPLE.

1. **RIGHT ACTUATING CYLINDER**
2. **RESTRICTOR NIPPLE (SEE NOTE)**
3. **LANDING GEAR FREE FALL VALVE**
4. **LEFT ACTUATING CYLINDER**
5. **EMERGENCY GEAR EXTENDER KNOB**
6. **NOSE ACTUATING CYLINDER**
7. **PRESSURE SWITCH**
8. **PUMP/RESERVOIR**

Hydraulic System Installation
32R-301 SP (s/n's 3213003 thru 3213041)
32R-301 II HP (s/n's 3213041 and up)
Figure 2 (Sheet 3 of 3)

HYDRAULIC POWER (Cont.)

C. Troubleshooting (cont.)

Chart 2.
Hydraulic System Troubleshooting

– NOTE –

PA32R-301 airplanes with s/n's 32R-8013001 thru 32R-8613005 and 3213001 thru 3213019, and PA32R-301T airplanes with s/n's 32R-8029001 thru 32R-8629005 and 3229001 thru 3229003 were originally equipped with Prestolite hydraulic pumps. PA32R-301 airplanes with s/n's 3213020 and up are equipped with Oildyne hydraulic pumps. Prestolite pumps may be replaced with Oildyne pumps by using Piper kit 764 785.

TROUBLE	CAUSE	REMEDY
Landing gear retraction system fails to operate.	Landing gear actuator circuit breaker open.	Reset circuit breaker and determine cause for open circuit breaker.
	Landing gear selector circuit breaker open.	Reset circuit breaker and determine cause for open circuit breaker.
	Landing gear actuator circuit wires broken.	Check wiring.
	Landing gear selector circuit wires broken.	Check wiring.
	Safety (squat) switch out of adjustment.	Readjust switch. (Refer to Adjustment of Safety to Chapter 32.)
	Squat switch inoperative.	Replace switch.
	Pressure switch inoperative.	Replace switch.
	Pump retraction solenoid inoperative (inboard solenoid).	Replace solenoid.
	Gear selector switch ground incomplete.	Check ground.
	Gear selector switch inoperative.	Replace switch.
	Hydraulic pump ground. incomplete	Check ground.

HYDRAULIC POWER (Cont.)

C. Troubleshooting (cont.)

Chart 2.
Hydraulic System Troubleshooting (cont.)

– NOTE –

If retracting solenoid of pump can be heard to actuate when gear selector switch is operated, it may be assumed the gear control circuit is operating properly and that the actuator circuit should be further checked.

TROUBLE	CAUSE	REMEDY
Landing gear retraction system fails to operate. (cont.)	Hydraulic pump inoperative.	Replace or overhaul pump.
	(1) Auxiliary extender switch inoperative.	Replace unit.
	Hydraulic fluid in reservoir below operating level.	Fill reservoir with hydraulic fluid.
	Battery low or dead.	Check condition of battery.
	(1) (2) Pressure head air passage obstructed.	Clear obstruction.
	(1) (2) Pressure head hose off.	Reconnect hose.
	(1) (2) Split or hole in diaphragm of auxiliary extender.	Replace diaphragm. Refer to Piper Service Letter No. 810.
	(1) ***If equipped with back-up landing gear extender***	
	(2) ***Can be checked by using override.***	
Landing gear extension system fails to operate.	Landing gear actuator circuit breaker open.	Reset circuit breaker and determine cause for open circuit breaker.
	Landing gear selector circuit breaker open.	Reset circuit breaker and determine cause for open circuit breaker.

HYDRAULIC POWER (Cont.)

C. Troubleshooting (cont.)

Chart 2.
Hydraulic System Troubleshooting (cont.)

TROUBLE	CAUSE	REMEDY
Landing gear extension system fails to operate. (cont.)	Landing gear actuator circuit wires broken.	Check wiring.
	Landing gear selector circuit wires broken.	Check wiring.
	Pump extension solenoid inoperative (outboard solenoid).	Replace solenoid.
	Gear selector switch ground incomplete.	Check ground.
	Gear selector switch inoperative.	Replace switch.
	Hydraulic pump ground incomplete.	Check ground.
	Hydraulicl pump inoperative.	Replace or overhaul pump.
	Hydraulic fluid in reservoir below operating level.	Fill reservoir with hydraulic fluid.
	Low or dead battery.	Check condition of battery.
Landing gear retraction extremely slow.	Hydraulic fluid in reservoir below operating level.	Fill reservoir with hydraulic fluid.
	Restriction in hydraulic lines.	Isolate and check hydraulic lines.
	Shuttle valve sticking in pump base.	Check cause.
Pump stops during gear retraction.	Landing gear actuator circuit breaker opens.	Reset circuit breaker and determine cause for overload.
	Landing gear selector circuit breaker opens.	Reset circuit breaker and determine cause for overload.
	(3) Pressure switch out of adjustment.	Remove and readjust or replace switch.
	(3) Oildyne pumps may require overhaul.	

HYDRAULIC POWER (Cont.)

C. Troubleshooting (cont.)

Chart 2.
Hydraulic System Troubleshooting (cont.)

TROUBLE	CAUSE	REMEDY
Pump stops during gear retraction. (cont.)	Mechanical restriction or obstruction in hydraulic system allows pressure to build up and shut off pump before gear has retracted.	Place airplane on jacks and run retraction check. Isolate and determine cause.
	Shuttle valve sticking in pump base.	Check cause.
Pump stops during gear. extension.	Landing gear actuator circuit breaker opens.	Reset circuit breaker and determine cause for overload.
	Landing gear selector circuit breaker opens.	Reset circuit breaker and determine cause for overload.
Pump fails to shut off though gear has fully retracted.	Pressure switch inoperative.	Replace switch.
	Pressure switch out of adjustment.	Replace switch.
	Pump retraction solenoid sticking (inboard solenoid).	Replace solenoid.
	Internal leakage of system.	(1) Check back-up extension unit valve for internal leak age.
		Check gear actuating cylinders for internal leakage.
		(4) Check for internal damage to hydraulic pump.
	External leakage of system.	(1) Check back-up extension unit valve for external leak age.

(1) If equipped with back-up gear extender

(4) Prestolite pumps only. Return Oildyne pumps to Piper Aircraft via local Piper distributor for overhaul.

HYDRAULIC POWER (Cont.)

C. Troubleshooting (cont.)

Chart 2.
Hydraulic System Troubleshooting (cont.)

TROUBLE	CAUSE	REMEDY
Pump fails to shut off though gear has fully retracted. (cont.)	External leakage of system. (cont.)	(5) Check free-fall valve for external leakage.
		Check gear actuating cylinders for external leakage.
	Pump relief valve out of adjustment.	Replace pump.
		(5) **Airplanes not equipped with back-up gear extender**
– NOTE – ***The out of adjustment or failed switch may be determined by noting which down light is not ON.***		
Pump fails to shut off though the gear has fully extended.	Pump extension solenoid sticking (out-board solenoid).	Replace solenoid.
	Nose gear down limit switch actuator out of adjustment.	Adjust switch actuator. (Refer to Adjustment of Nose Gear Down Limit Switch, Chapter 32.)
	Nose gear down limit switch failed.	Replace switch.
	Main gear down limit switch out of adjustment.	Adjust switch. (Refer to Adjustment of Main Gear Down Limit Switch, Chapter 32.)
	Main gear down limit switch failed.	Replace switch.

HYDRAULIC POWER (Cont.)

C. Troubleshooting (cont.)

Chart 2.
Hydraulic System Troubleshooting (cont.)

TROUBLE	CAUSE	REMEDY
Pump running intermittently after gear has retracted.	Leakage of high pressure check valve.	(4) Remove pump and replace check valve.
	Internal leakage of system.	Check auxiliary retraction unit valve for internal leakage.
		Check gear actuating cylinders for internal leakage.
	External leakage of system.	Check back-up extension unit valve for external leakage.
		Check gear actuating cylinders for external leakage.
		Check for broken or damaged hydraulic lines.
		(4) Prestolite pumps only. Return Oildyne pumps to Piper Aircraft, via local Piper distributer, for overhaul.
Gear stops part way up, but pump continues to run.	Pump high pressure relief valve out of adjustment.	Replace pump.
	Internal leakage of system.	Check back-up extension unit valve for internal leakage.
		Check gear actuating cylinders for internal leakage.
		Check for broken or damaged hydraulic lines.
	Hydraulic fluid in reservoir below operating level.	Fill reservoir with hydraulic fluid.

HYDRAULIC POWER (Cont.)

C. Troubleshooting (cont.)

Chart 2.
Hydraulic System Troubleshooting (cont.)

TROUBLE	CAUSE	REMEDY
All gears fail to free fall.	(1) Back-up extension unit valve fails to open.	Check unit and valve and replace.
	(6) Free-fall valve fails to open.	Replace valve.
	(1) If equipped with back-up gear extender	
	(6) Airplanes not equipped with back-up gear extender	
(1) Gear free falls at air speeds above that required.	Back-up extender unit hydraulic valve fails to close.	Check extender unit spring adjustment.
		Check hydraulic valve for sticking open.
		Check extender unit diaphragm for damage.
		Check for restriction in air pressure and static lines.
(1) If equipped with back-up gear extender		
(1) Landing gear fails to operate at required speeds. (Gear up at 81 KIAS, gear down at 103 KIAS.)	Friction or tight connection at any of the attachment points (pivot points) of the override control components.	Clean, free and lubricate all pivot points.
	Binding of diaphragm shaft caused by build up of sand or dirt.	Clean all moving parts.
(1) If equipped with back-up gear extender		

HYDRAULIC POWER (Cont.)

C. Troubleshooting (cont.)

Chart 2.
Hydraulic System Troubleshooting (cont.)

TROUBLE	CAUSE	REMEDY
(1) Landing gear will not retract after selecting up at an airspeed above actuator speed. Also, upon trying to override it is found that only with a steady pressure can the override be activated. After gear does retract and the override lever (manual extruder) is relaxed (approximately 11 to 15 seconds) the gear will fall free. **(1) If equipped with back-up gear extender**	Restriction in pressure head of gear back-up extender actuator.	Disconnect hoses at back-up extender and clean out hoses and head.
With gear selector down and three green lights on, gear unsafe light comes ON or intermittently ON.	Shorted gear up solenoid.	Replace solenoid.
With gear selector down and three green lights ON, pump motor circuit breaker opens.	Shorted gear up solenoid.	Replace solenoid.
With gear unsafe light on, pump operates on and off.	Shorted gear down solenoid.	Replace solenoid.
With gear unsafe light on, pump motor circuit breaker opens.	Shorted gear down solenoid.	Replace solenoid.
(1) With override lever up, auto extension OFF light fails to operate. **(1) If equipped with back-up gear extender**	Auto extension off switch actuator out of adjustment. switch location) by moving mounting bracket at attachment slot. Adjust switch until actuator is closed when emergency gear handle is in override position and open when handle is in neutral.	Adjust switch. (Refer to Description, Chapter 29 for

HYDRAULIC POWER (Cont.)

C. Troubleshooting (cont.)

Chart 2.
Hydraulic System Troubleshooting (cont.)

TROUBLE	CAUSE	REMEDY
(1) With override lever up, auto extension OFF light fails to operate. (cont.)	Auto extension off switch failed.	Replace switch.
	Auto extension off flasher failed.	Replace flasher.
(1) If equipped with back-up gear extender		

Chart 3
Hydraulic Pump Motor Characteristics

	HYC5005 Prestolite	Piper p/n 481 879 Oildyne
Electrical Characteristics:		
Voltage	14 V.d.c.	14 V.d.c.
Rotation	Reversible	Reversible
Polarity	Negative ground	Negative ground
Operating Current	75 amps, max. at 14 volts (both rotations)	65 amps, max. at 14-volts (both rotations)
Operating Time	12 seconds max. with a current load of 75 amperes at 77° F	– – –
Overload Protection	Thermal circuit breaker	25 ampere Landing Gear Actuator circuit breaker
Automatic Reset Time	12 seconds, max.	– – –
Location, Automatic Reset	Commutator end head of motor	– – –

HYDRAULIC POWER (Cont.)

C. Troubleshooting (cont.)

Chart 3
Hydraulic Pump Motor Characteristics (cont.)

	HYC5005 Prestolite	Piper p/n 481 879 Oildyne
Mechanical Characteristics:		
Bearings	Absorbent bronze (Drive end bearing in upper pump and valve assembly casting)	– – –
	Steel ball (Thrust, between commutator end head and end of armature shaft)	– – –
End Play, Armature	.005 inch, min. (Adjust by selection of thrust washers on drive end of armature shaft)	– – –

GRIDS 2F16 THROUGH 2F18
PAGES 29-20 THROUGH 29-22
INTENTIONALLY LEFT BLANK

MAIN

– NOTE –

PA32R-301 airplanes with s/n's 32R-8013001 thru 32R-8613005 and 3213001 thru 3213019, and PA32R-301T airplanes with s/n's 32R-8029001 thru 32R-8629005 and 3229001 thru 3229003 were originally equipped with Prestolite hydraulic pumps. PA32R-301 airplanes with s/n' 3213020 and up are equipped with Oildyne hydraulic pumps. Prestolite pumps may be replaced with Oildyne pumps by using Piper kit 764 785.

A. Removal of Prestolite Hydraulic Pumps

The Prestolite hydraulic pump, with reservoir incorporated, is located in the nose section of the fuselage. Access to the pump is through the access panel in the nose baggage compartment. To remove pump:

(1) Disconnect the pump electrical leads from the pump solenoid relays and the ground wire from the battery shelf.
(2) Disconnect the hydraulic lines from the pump. Cap the line ends to prevent contamination.
(3) Remove pump by removing pump attaching bolts.
(4) Cap or plug all ports.
(5) Clean exterior of pump using a dry cleaning solvent to remove accumulated dirt and dust

B. Disassembly of Prestolite Hydraulic Pump. (Refer to Figure 3.)

If the airplane is equipped with a faulty Prestolite hydraulic pump, it is recommended it be sent to an accredited overhaul facility for disassembly and repair. If equipped with an Oildyne hydraulic pump that is found to be faulty, either return pump to Oildyne via your local Piper distributor for disassembly and overhaul, or replace pump.

The major components of the pump assembly are: pump base, valve and gear case, reservoir, and pump motor.

To disassemble the major components of the ***Prestolite*** hydraulic pump:

(1) Remove pump base from valve and gear case by:
  (a) Cutting safety wire and removing bolts with washers securing pump base to pump and gear case.
  (b) The check valve within the pump base should be removed for cleaning purposes only. To remove valve, cut safety wire and remove bolt, spring and steel ball. Replace O-ring at reassembly.

MAIN (Cont.)

B. Disassembly of Prestolite Hydraulic Pump. (Refer to Figure 3.) (cont.)

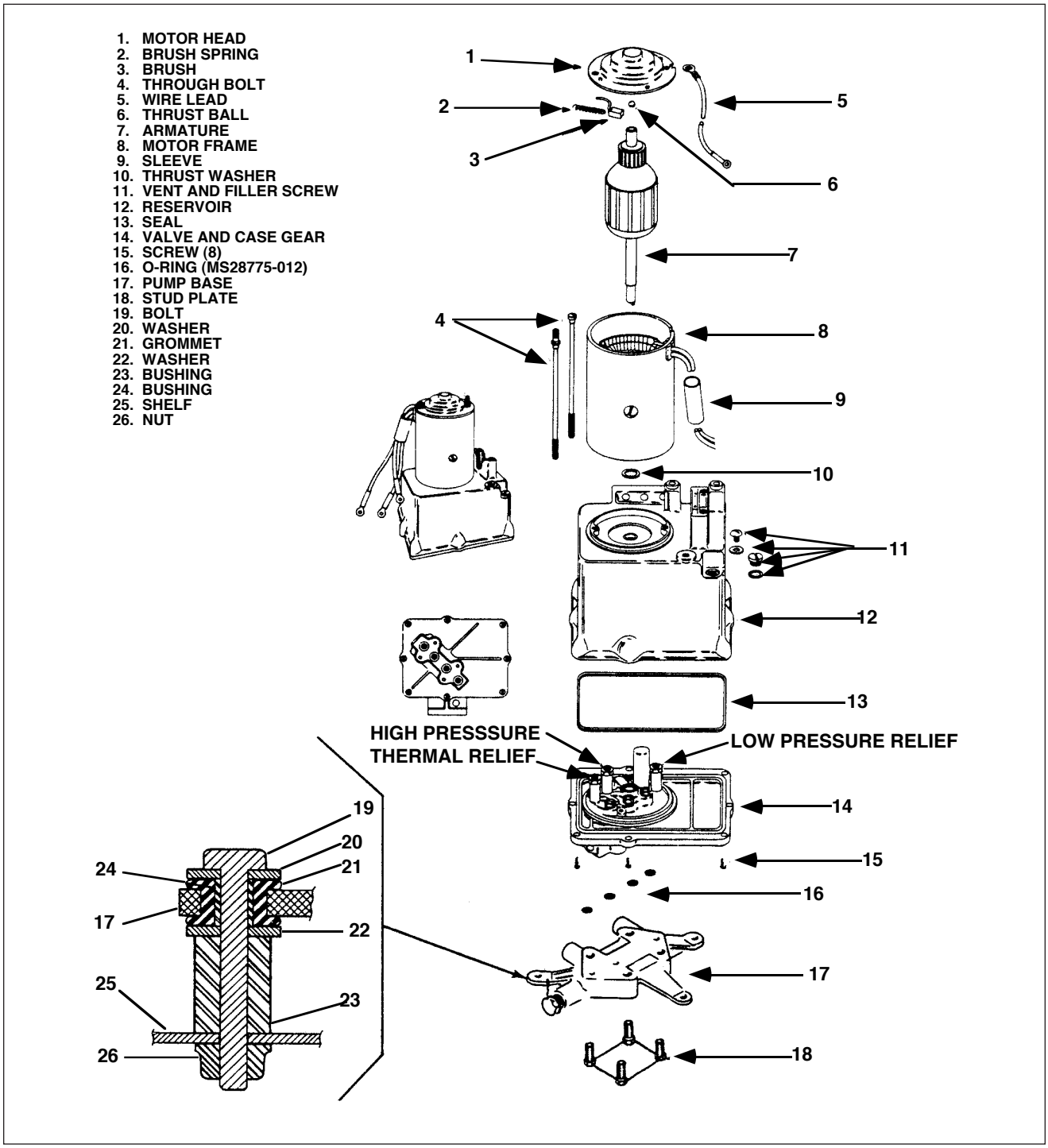

Prestolite Hydraulic Pump / Reservoir Exploded View
Figure 3

MAIN (Cont.)

B. Disassembly of Prestolite Hydraulic Pump. (Refer to Figure 3.) (cont.)

(2) Remove pump motor from pump and disassemble as follows:
(a) Remove through bolts from head of motor. Using a knife cut seal coating between motor head and case.
(b) Lift the head up from case approximately 0.50 of an inch. This will allow inspection of brushes without brushes unseating from commutator. (Refer to Cleaning, Inspection and Repairs of Hydraulic Pump for brush inspection.) The brush leads are secured to the head assembly.
(c) Raise head assembly off armature and note the small thrust ball located between end of armature and motor head. Do not misplace this bearing.
(d) Draw armature from motor frame. Note number of thrust washers mounted on drive end of armature shaft.
(e) Remove motor frame from pump reservoir.

(3) Remove valve and gear case from reservoir as follows:
(a) Remove eight screws from flange of body and separate the two assemblies.
(b) Pump gears and valves should be removed for cleaning purposes only. Remove cap securing gears by removing attaching bolts. The two valve springs should be positively identified with their cavities to preclude the necessity of readjusting each valve for proper operating pressure.

C. Cleaning, Inspection and Repairs of Prestolite Hydraulic Pump

– CAUTION –

Repair facilities must be clean to prevent contamination of pump components. Proper and careful handling should be exercised to prevent damaging pump components

(1) Discard all O-rings.
(2) Remove caps or plugs and clean all components with a dry type cleaning solvent and dry thoroughly.
(3) Inspect pump components for scratches, scores, chips, cracks and wear.
(4) Inspect motor for worn brushes (minimum of .218 brush remains between the braided wire and commutator end), excess wear and excess bearing wear.
(5) Repairs are limited to O-ring and brush replacement as follows:
(a) One brush holder has the winding wire attached. Locate this wire and remove by using a soldering gun.
(b) The head assembly can now be removed and worked on for ease of brush replacement if required.
(c) Remove brush wire and brush from by-metal heat protector.

MAIN (Cont.)

C. Cleaning, Inspection andRepairs of Prestolite Hydraulic Pump (cont.)

(d) Solder new brush wires to head assembly and by-metal heat protector, and wire from winding to one brush holder.

(e) Install brush springs and brushes into brush holders and secure in place (temporary) with a piece of string looped around the brush and holder and tied in a knot.

– NOTE –

Insure that braided wire is in the holder slot for proper brush movement.

(f) Install the head assembly with new brushes to the frame and commutator in accordance with instructions given in Assembly of Hydraulic Pump, Step 1.

D. Assembly of Prestolite Hydraulic Pump (Refer to Figure 3.)

(1) To assemble pump motor install on reservoir:

(a) Position motor frame on reservoir. Note aligning marks on frame and reservoir.

(b) Place the same amount of thrust washers removed on drive end of armature.

(c) Lubricate entire length of armature shaft, on drive end, with light grease to prevent O-ring seal damage. Insert end of shaft in reservoir.

(d) Saturate felt oiling pad around commutator end bearing with SAE 20 oil. Allow excess oil to drain off before assembling motor.

(e) Insert thrust ball in bearing of motor head. Place a small amount of grease inside bearing to hold ball in position.

(f) Place head assembly on frame. Allow brushes to extend over commutator. Remove string securing brushes in holders. Push head assembly on frame. Ensure proper indexing of head and frame assemblies. Secure in place with through bolts.

(g) Check freedom of rotation and end play (thrust) of armature within assembly. A minimum of 0.005 inch end play is required. Adjust to this tolerance as necessary by adding or removing thrust washers on drive end of armature shaft.

(2) Assemble valve and gear case to the reservoir as follows:

(a) If removed, place pump gears in valve and gear case and install cover. Install cover attaching bolts and secure.

(b) Lubricate reservoir seal ring with hydraulic fluid (MIL-H-5606A) and place in recess provided in case.

(c) Position reservoir on valve and gear case. Care should be taken when aligning armature shaft with pump gear. Do ***not run*** motor to accomplish this.

(d) Ensure seal ring is properly positioned; install and tighten screws. Connect motor electrically to a 14-volt power supply. With an ammeter in the circuit, check current draw does not exceed 12 amperes.

(3) Attach the pump base to the pump as follows:

(a) With pump inverted, lubricate O-ring seals and install them in recesses provided in the valve and gear case.

(b) Install attaching bolts with washers and torque to 70 inch-pounds.

(c) Safety attaching bolts with MS20995-C32 wire.

(4) Conduct motor operational check not to exceed 10 seconds running time.

MAIN (Cont.)

E. Test and Adjustment of Prestolite Hydraulic Pump (Refer to Figure 4)

(1) Test Equipment:
- (a) Hydraulic pump and mounting base.
- (b) Pressure gauge (0-1000 psi).
- (c) Pressure gauge (0-3000 psi).
- (d) Hoses with fittings to connect base and gauges.
- (e) Power supply (14 VDC).
- (f) Ammeter (0 to 100 amps)
- (g) Fuse or circuit protector (100 amps).

(2) Test and Adjustment:

– NOTE –

Test gauges or gauges of known accuracy should be used when performing the following tests.

- (a) Connect the 0 to 1000 psi gauge to the low pressure port of the pump base.
- (b) Connect the 0 to 3000 psi gauge to the high pressure port of the pump.base.
- (c) Connect black lead of pump motor to the negative terminal of the DC power supply.
- (d) Remove the filler plug located on the forward side of the pump and ascertain that fluid is within 1/2 inch of the bottom of the filler plug hole. Should fluid be below this level, add fluid, MIL-H-5606A, through the filler hole. Reinstall the filler plug and tighten.

– NOTE –

A small vent hole is located under the vent screw head. Retain 1/64 inch clearance between the screw head and the small vent hole.

- (e) Bleed air from the attached lines. (Lines may be bled by alternately connecting blue lead and green lead to the positive terminal of the power supply until all air is exhausted.)
- (f) Connect blue lead to positive terminal of power supply. Pump should operate and the high pressure gauge should indicate a specific pressure, as given in Chart 2 (refer to 29-00-00).
- (g) Disconnect blue lead. The high pressure reading should not drop more than 300 psi in five minutes. High pressure may not be selected again for five minutes.
- (h) Connect green lead to positive terminal of power supply. Pump should operate in reverse, dropping reading on high pressure gauge to zero. The low pressure gauge should indicate 500 to 800 psi. Disconnect green lead. Both pressure gauges should indicate zero psi.
- (i) Should it be necessary to check the pump motor, first connect the ammeter in the electrical circuit with the positive terminal of the meter to the black lead and negative terminal of the meter to the negative terminal of the DC power supply.
- (j) Connect the blue lead from the pump motor to the positive terminal of the power supply. With a high pressure indication on the pressure gauge, the ammeter should read 75 amperes maximum. Disconnect the blue lead.

MAIN (Cont.)

E. Test and Adjustment of Prestolite Hydraulic Pump (Refer to Figure 4) (cont.)

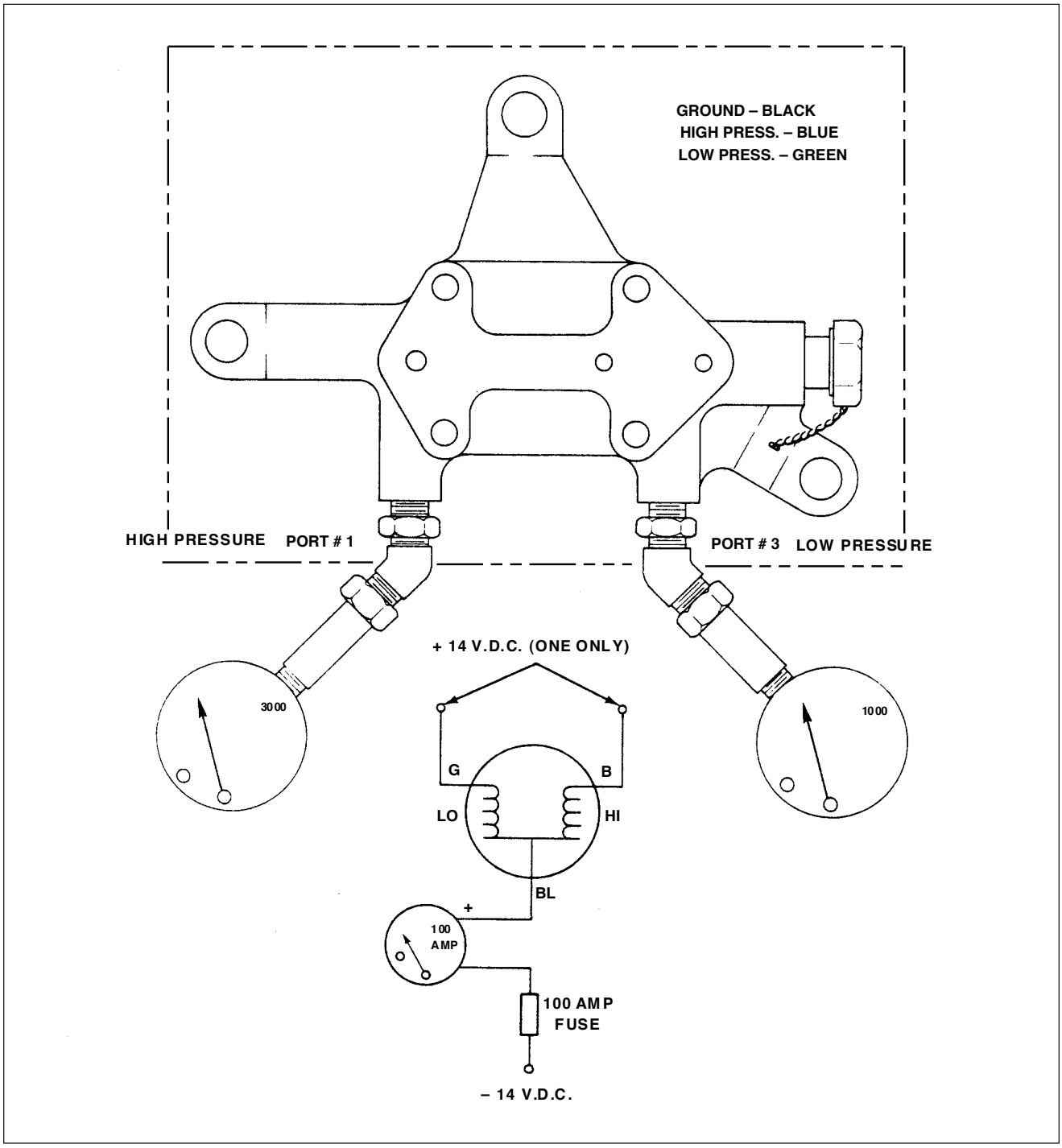

Test and Adjustments of Prestolite Hydraulic Pump
Figure 4

MAIN (Cont.)

E. Test and Adjustment of Prestolite Hydraulic Pump (Refer to Figure 4) (cont.)

(2) Test and Adjustment (cont.):

(k) Connect the green lead from the pump motor to the positive terminal of the power supply. With low pressure indication within the 500 to 800 psi range, the ammeter should read between 15 to 35 amperes.

– NOTE –

Replace pump assembly if any of the various tests do not perform satisfactorily.

(l) Disconnect the green lead from the power supply and permit the pressure to drop before disconnecting the hydraulic lines.

F. Installation of Prestolite Hydraulic Pump (Refer to Figure 3)

(1) Insert grommet in pump base mounting hole.
(2) Insert bushing in grommet.
(3) Place washer over bolt and insert bolt through grommet, bushing and pump base.
(4) Place washer and bushing over bolt. Secure to mounting shelf.
(5) Connect hydraulic lines to pump.
(6) Connect pump electrical leads. Blue wire to gear up solenoid, green wire to gear down solenoid, and black wire to ground.
(7) Check fluid level in pump. Refer to Chapter 12 for filling instructions.
(8) With airplane on jacks, operate pump to purge hydraulic system of air, and check for leaks. After operation, recheck fluid level.

G. Removal of Oildyne Hydraulic Pump

The Oildyne hydraulic pump, with reservoir incorporated, is located in the nose section of the fuselage. Access to the pump is through the access panel in the nose baggage compartment. To remove pump:

(1) Disconnect the pump electrical leads from the pump solenoid relays and the ground wire from the battery shelf.
(2) Disconnect the hydraulic lines from the pump. Cap the line ends to prevent contamination.
(3) Remove pump by removing pump attaching bolts.
(4) Cap or plug all ports.
(5) Clean exterior of pump using a dry cleaning solvent to remove accumulated dirt and dust

H. Servicing Oildyne Hydraulic Pump (Refer to Figure 5)

Field service of Oildyne hydraulic pumps is limited to removal, cleaning, and inspecting the hydraulic fluid reservoir. Should pump malfunction, either replace pump, or return pump to Piper Aircraft, via the local Piper distributor, for servicing or repairs.

The Oildyne pump incorporates a dipstick to check the quantity of hydraulic fluid in the reservoir. Replenish only with MIL-H-5606 petroleum base hydrfaulic fluid.

MAIN (Cont.)

H. Servicing Oildyne Hydraulic Pump (Refer to Figure 5) (cont.)

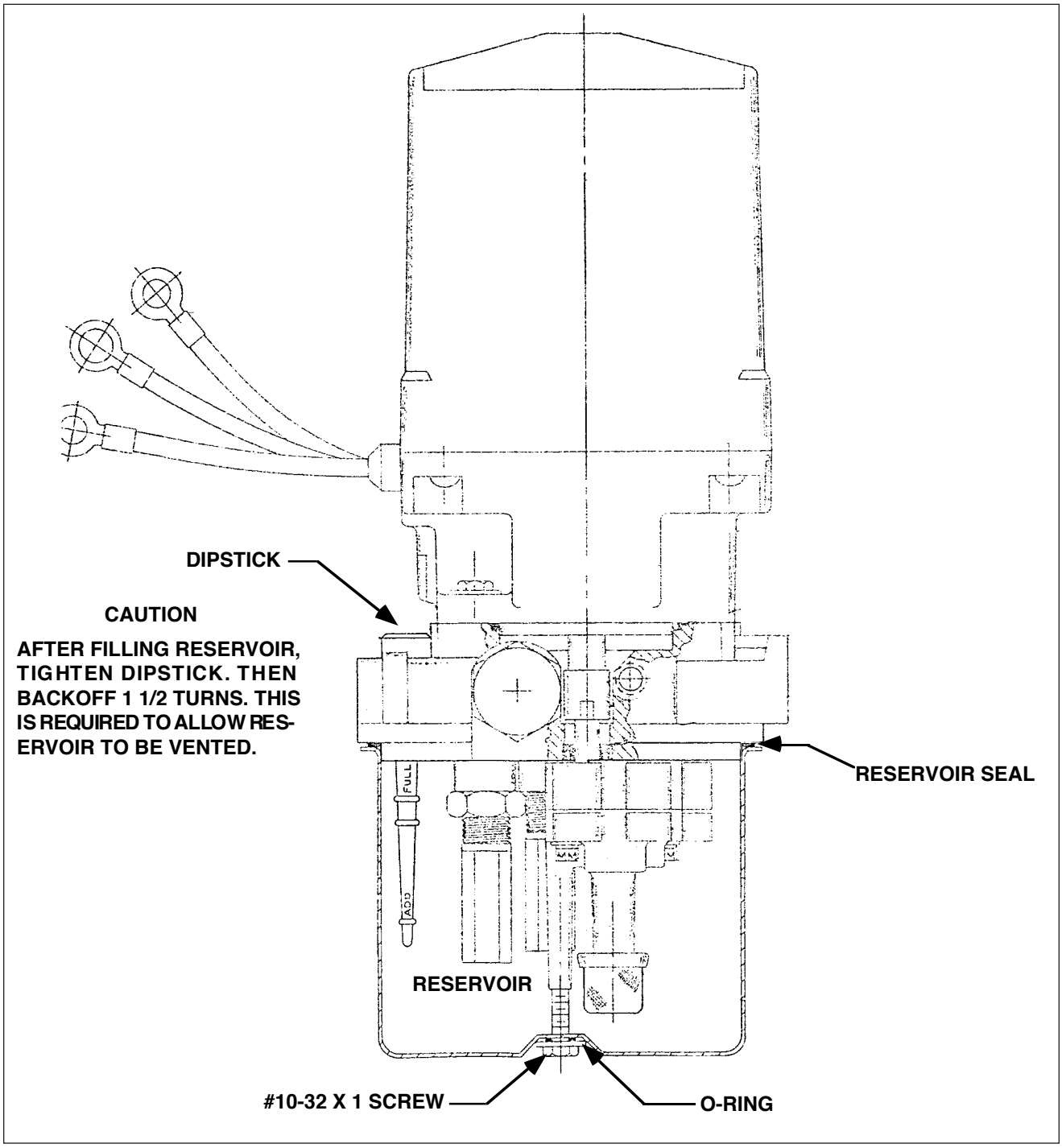

Oildyne Hydraulic Pump
Figure 5

MAIN (Cont.)

I. Back-Up Landing Gear Extender Actuator Assembly

– NOTE –

PA32R-301 airplanes with s/n's 32R-8013001 thru 32R-8613005 and 3213001 thru 3213002, and PA32R-301T airplanes with s/n's 32R-8029001 thru 32R-8029110, 32R-8029121 thru 32R-8629006 and 3229001 thru 3229003 may be equipped with a back-up landing gear extender. Refer to Piper Service Bulletin No. 866A

– NOTE–

Beginning with airplane s/n's 3213003 and up, Piper Aircraft no longer installs the automatic gear extender system. Piper kit, P/N 765 199, provides information concerning the removal of the backup landing gear extension system

(1) Removal of Back-Up Landing Gear Extender Actuator Assembly. (Refer to Figure 6.)

The back-up landing gear extender actuator is located under the center seat floorboard. Gain access to the actuator by removing center seats and floorboard.

(a) Disconnect actuator electrical leads at quick disconnect terminals.
(b) Disconnect manual override control rod at actuator control arm by removing cotter pin, washers, and clevis pin.
(c) Disconnect pressure and static hoses from elbows of diaphragm housing by releasing clamps and sliding hoses from their elbows. Hoses should be tagged for ease of reassembly.
(d) Place a shop cloth under actuator hydraulic valve to absorb fluid. Disconnect hydraulic tubes from cross and tee. Cover open tubes and fittings to prevent contamination.
(e) Remove the hardware that secure the actuator base to the mountin~ brackets. There are two mounting bolts at the inboard side of the base and one mounting screw at the outboard side of the diaphragm housing. Remove the actuator from the mounting brackets.

(2) Installation of Back-Up Landing Gear Extender Actuator Assembly. (Refer to Figure 6.)
(a) Position the gear back-up extender actuator against its mounting brackets and install attaching hardware. Do not tighten nuts.
1 With the base attached and before installing the attaching screw through the ring of the diaphragm housing, insure that the attaching holes in the housing and mounting bracket align without using force. Should they misalign, it may be necessary to reform the main fuselage mounting bracket.
2 To reform the main fuselage mounting bracket, an aligning tool may be used (Refer to Figure 29-5.) This tool may befabricatedfrom dimensions given in Chapter 95. When proper alignment has been accomplished, tighten the attaching hardware.
(b) Connect the manual control push rod to the actuator control arm using clevis pin. Place a washer over end of clevis pin and secure with cotter pin.

MAIN (Cont.)

I. Back-Up Landing Gear Extender Actuator Assembly (cont.)

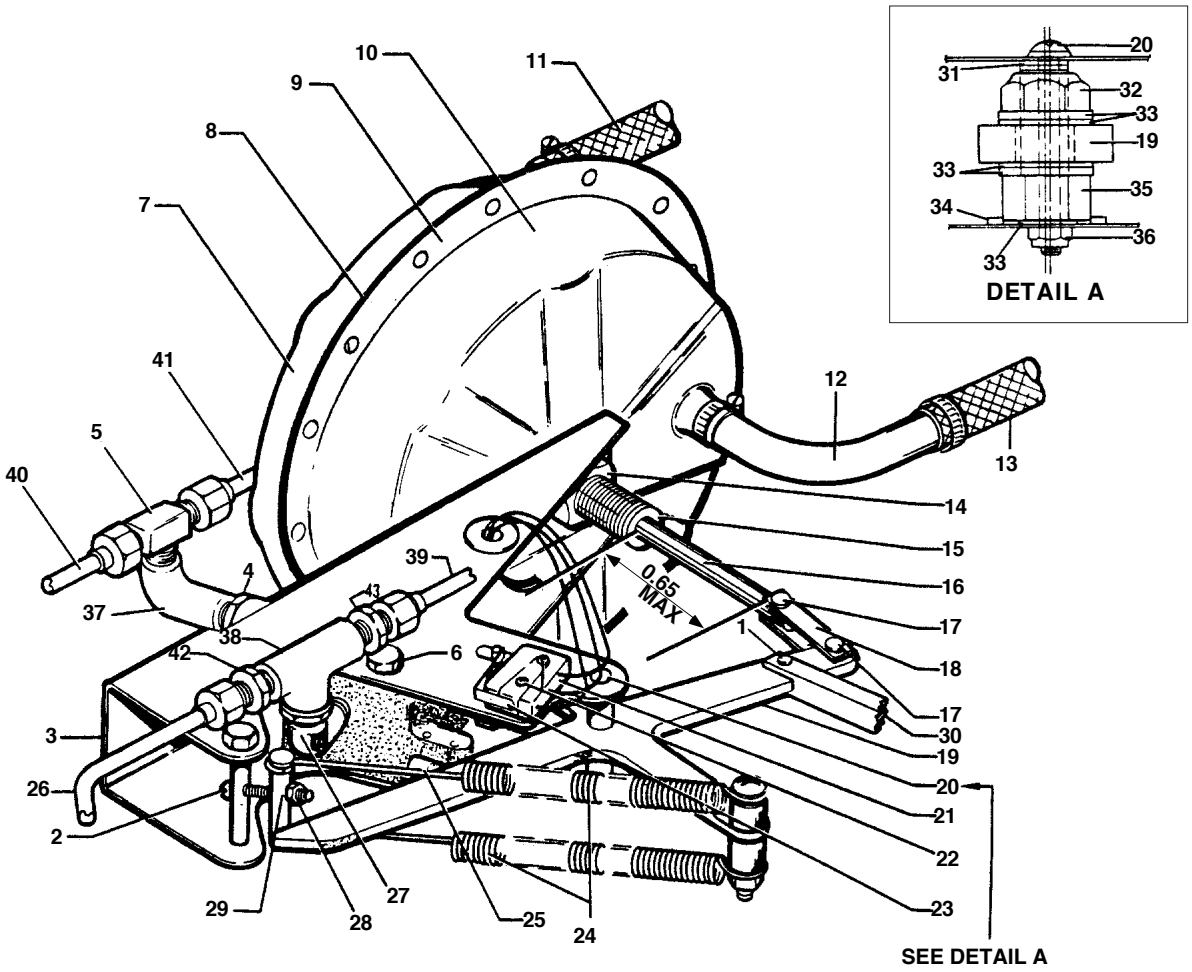

1. CLEVIS PIN
2. ADJUSTMENT SCREW
3. BASE
4. NIPPLE
5. TEE
6. BOLT & NUT
7 STATIC HOUSING ASSEMBLY
8. SEAL
9. HOUSING RING
10. PRESSURE HOUSING ASSEMBLY
11. STATIC HOSE
12. ELBOW
13. PRESSURE HOSE
14. NUT
15. TEFLON BUSHING
16. DIAPHRAGM SHAFT
17. CLEVIS PIN
18. LINK
19. ACTUATING ARM
20. SCREW
21. PUMP SWITCH
22. SCREW & NUT
23. ACTUATOR SWITCH
24. SPRINGS
25. HYDRAULIC VALVE
26. TUBE
27. ELBOW
28. JAM NUT
29. ANCHOR
30. PUSH ROD
31. SPACER
32. ADJUSTMENT NUT
33. WASHER
34. CAM
35. ECCENTRIC BOLT
36. NUT
37. ELBOW
38. TEE
39. TUBE
40. TUBE
41. TUBE
42. NIPPLE
43. NIPPLE

Landing Gear Back-Up Extender Actuator
Figure 6

MAIN (CONT.)

I. Back-Up Landing Gear Extender Actuator Assembly (cont.)

(2) Installation of Back-Up Landing Gear Extender Actuator Assembly. (Refer to Figure 6.) (cont.)

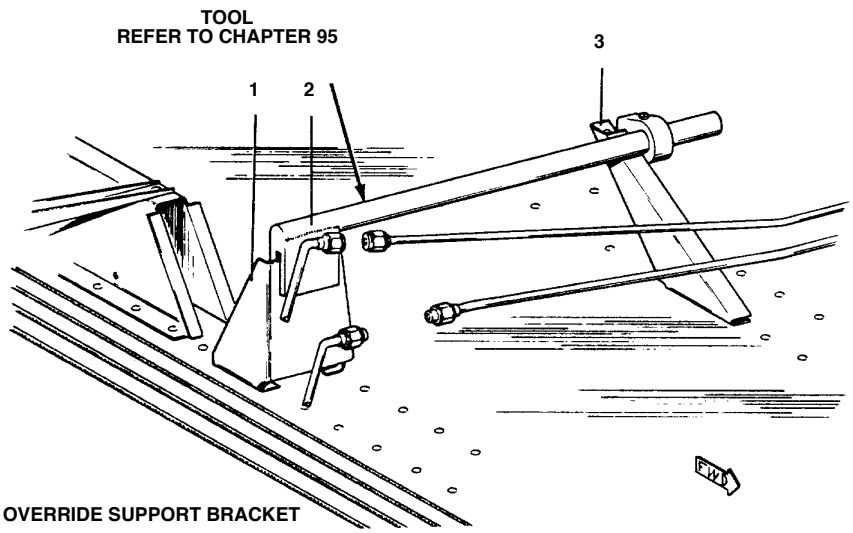

Checking Aligning Brackets of Landing Gear Back-Up Gear Extender Actuator
Figure 7

(c) Move actuator on its mounting brackets to allow manual control push rod to have maximum clearance from the left stabilator cable and center in the fairlead on the aft face of the main spar box. Check system for sufficient travel and freedom of movement of controls. Tighten actuator attaching hardware.

– NOTE –

Use care should when attaching forward hose to diaphragm assembly so that no strain is placed on teflon bushing and diaphragm shaft, thus causing friction in movement.

(d) Connect hydraulic tubes to respective tees.
(e) Connect the pressure and static hoses to the elbows of the diaphragm housing. Secure hoses with clamps.
(f) Connect the actuator electrical leads terminal to their mating terminals and insulate. Refer to the electrical schematic for hookup.
(g) Check the actuator adjustments.
(h) Install floorboard and center seats.

MAIN (Cont.)

J. Check and Adjustment of Gear Back-Up Extender Actuator (Refer to Figure 6)

– NOTE.–

Prior to testing, ensure distance between teflon bushing and link does not exceed 0.65 inch. Override must be engaged to check. Make adjustments at spar box linkage. Refer to Figure 6.

(1) If diaphragm problem is suspected check the following:
   (a) If the landing gear retracts or extends at too high an airspeed or will not retract at all unless the back-up extender is placed in the override position, then the diaphragm is possibly defective.
   (b) If it is determined that the diaphragm is defective, remove Back-Up Extender and install Piper Kit No. 761 138, Back-Up Gear Extender Diaphragm Replacement. Instructions for installing the diaphragm are included in the kit.
   (c) Following completion of Replacement Kit, install the extender unit in aircraft and functionally test and adjust as outlined below and in Operational Check of Retractable Landing Gear System.

(2) Adjustment of landing gear back-up extender actuator is preset to allow hydraulic valve of actuator to open when airspeed is reduced below 103 KIAS with the engine power OFF. Adjustment is accomplished by setting tension of spring on actuator with adjustment screw as follows:

– WARNING –

While making adjustments, do not lay tools in area exposed by the removal of floorboard. This may interfere with airplane controls.

– CAUTION –

Do not adjust micro switch and eccentric bolt. These components are set at the factory under specific conditions and with the use of special set-up equipment.

– NOTE –

The airspeed at which the hydraulic valve of the actuator opens was preset at the factory under ideal conditions. There could be some variations at different altitudes and atmosphere conditions.

– NOTE –

This adjustment requires two people: a qualified pilot and a mechanic to set the actuator adjustment screw.

   (a) Remove center seats and floorboard.

MAIN (Cont.)

J. Check and Adjustment of Gear Back-Up Extender Actuator (Refer to Figure 6) (cont.)

(b) Torque pivot screw to 8 to 10 inch-pounds.

(c) Loosen jam nut of adjustment screw.

(d) Ensure electrical switch will actuate with use of emergency gear extension lever.

(e) Fly the airplane (refer to Owner's Handbook). Should spring tension be very far out of adjustment it may be necessary to assist gear retraction with the use of the emergency gear extension lever moved to the up override position.

(f) Loosen the adjustment screw [(2), Figure 6] by turning counterclockwise until spring tension is free.

(g) With airplane at a safe altitude, slow airplane to a glide of 109 KIAS with gear selector handle up and throttle reduced to power OFF. (Gear unsafe light and horn will activate when power is reduced.) At 109 KIAS, slow the airplane at a rate of one knot per second until 103 KIAS is obtained. Maintain airplane at this airspeed.

– NOTE –

Adjustment of adjustment nut [(32), Figure 6] may be necessary to increase or decrease spread between gear up and gear down actuation airspeeds. Increase spread between these speeds by loosening nut. Tighten nut to bring airspeeds closer together. Whenever adjustment nut is adjusted, it may be necessary to readjust spring tensions and to repeat nut adjustment procedure. CAUTION should be observed so as not to disturb the position of eccentric bolt [(35), Figure 6] in relation to the rest of the unit.

(h) With the glide established, turn the adjustment screw clockwise until the gear drops. (First indication of gear dropping will be that the gear unsafe light comes ON.)

(i) Climb again to a safe altitude and check that the gear drops at the correct airspeed.

(j) Land the airplane and tighten the adjustment screw jam nut.

(3) To check adjustment of electrical switch:

(a) Place airplane on jacks. (Refer to Jacking, Chapter 7.)

(b) Set mixture control back to idle cut-off. Set throttle full forward to prevent gear warning horn from sounding during adjustment.

(c) Determine that actuator tension springs are properly adjusted according to Step 2.

(d) Retract the landing gear hydro-electrically by turning the master switch ON, raising the emergency gear extension lever and moving the gear selector switch to the up position. The emergency gear extension lever must be retained in the up position to keep the gear up.

(e) Check proper switch operation by:

1 Turning master switch ON and moving gear selector switch to up position. Pump should not operate.

2 Move emergency gear extension lever to up override position. Pump should operate and gear should retract.

3 With selector lever up, slowly lower emergency gear extension lever to allow gear to drop to down position. The pump should not operate at any time during extension.

4 Turn master switch OFF.

MAIN (Cont.)

J. Check and Adjustment of Gear Back-Up Extender Actuator (Refer to Figure 6) (cont.)

(3) To check adjustment of electrical switch (cont.):

(f) Check gear operation in the normal manner with gear selector switch. The emergency extension lever must be held in the up override position.

(g) Ensure gear is down and locked; remove airplane from jacks. Flight check retractable landing gear system. (Refer to Operational Check of Retractavble Landing Gear System)

K. Operartional Check of Retractable Landing Gear System

(1) Airplanes equipped ***with*** back-up gear extender:

(a) Maximum Gear Extend: Place the gear selector in the down position at 130 KIAS. In approximately 5 to 10 seconds the three green gear lights should be on indicating that the gear is down and locked.

(b) Minimum Gear Retract: Allow approximately 8 seconds for the pressure in the hydraulic system to normalize between gear extension and retraction. Place the selector switch in the UP position at 109 KIAS. In approximately 5 to 10 seconds all the gear indicating lights should be out, indicating that the gear is fully retracted.

(c) Back-Up Extender Override Gear Down and Up:

1 Down: Establish a normal glide at approximately 113 KIAS, with power at idle. Slowly move override lever down, while observing ammeter to confirm that hydraulic pump does not start. Gear should extend and lock. Move gear selector switch down. Release override lever. Gear should remain down.

2 Up: Set maximum climb power. Maintain approximately 70 KIAS for approximately 15 seconds. Move gear selector switch to up position. The gear should not retract. Pull override lever up. Gear should retract. Allow airspeed to increase to at least 113 KIAS. Release override lever; gear should remain up.

(d) Back-Up Extender Gear Down and Up:

1 Gear Down: Set power at idle. Glide airplane at 113 KIAS. Decrease airspeed at the rate of 1 knot per second. Gear should start down between 98 to 108 KIAS. After gear is down and locked place gear selector switch down.

2 Gear Up: Set maximum climb power. Maintain approximately 70 KIAS for approximately 15 seconds. Move gear selector up. Gear should stay down and locked. Increase airspeed at the rate of 1 knot per second. Gear should begin to retract between 76 and 85 KIAS at zero ***density*** altitude. The speed at which gear starts to retract will increase 1.3 KIAS for each 1000 feet increase of ***density*** altitude.

3 Manual Override Up Latch: With the gear up, the aircraft in normal flight configuration, select up on the gear override lever. Engage the up latch. The amber up latch warning light, below the gear selector switch, should be flashing. Gradually slow the aircraft below the auto gear extend speed and observe that the gear stays fully retracted. Disengage the up latch. The flashing amber warning light should go out.

MAIN (Cont.)

K. Operartional Check of Retractable Landing Gear System (cont.)

(1) Airplanes equipped ***with*** back-up gear extender (cont.):

(e) Gear Indicator Lights:

1 The green lights indicate when the corresponding gear is in the locked down position. Turn landing light switch on and off; observe ammeter for indication.

2 The red gear warning light will indicate an unsafe condition. It will be ON when gear is in an intermediate position, neither fully up nor down. In conjunction with the sounding of the gear warning horn, when the throttle setting is less than l4 ± 2 inches of manifold pressure, it will be ON when the gear is not locked down. It will also indicate that the gear is locked down when the selector switch is in the UP position, except at full throttle.

(f) The Gear Warning Horn: Will sound, in conjunction with red gear unsafe light, per the conditions noted above.

(g) Throttle Micro Switches Check:

1 The forward throttle micro switch is checked by moving the throttle full forward while the gear is down and the gear selector switch is in the up position. The horn should stop sounding and the red light should go out. Retard the throttle slightly and the horn and light should come on.

2 The aft throttle micro switch setting is checked as follows: With gear up, reduce throttle at a normal rate. The gear warning horn and the red light should come on at 14 + 2 inches of manifold pressure.

(2) Airplanes ***not*** equipped with back-up gear extender

(a) Maximum Gear Extend:

1 (PA32R-301 SP / 301T SP): Place the gear selector in the down position at ***132 KIAS***. In approximately 5 to 10 seconds the three green gear lights should be on indicating that the gear is down and locked.

2 (PA32R-301 II HP): Place the gear selector in the down position at ***130 KIAS***. In approximately 5 to 10 seconds the three green gear lights should be on indicating that the gear is down and locked.

(b) Maximum Gear Retract:

1 (PA32R-301 SP / 301T SP): Allow approximately 8 seconds for the pressure in the hydraulic system to normalize between gear extension and retraction. Place the selector switch in the UP position at ***110 KIAS***. In approximately 5 to 10 seconds all the gear indicating lights should be out, indicating that the gear is fully retracted.

2 (PA32R-301 II HP): Allow approximately 8 seconds for the pressure in the hydraulic system to normalize between gear extension and retraction. Place the selector switch in the UP position at ***108 KIAS***. In approximately 5 to 10 seconds all the gear indicating lights should be out, indicating that the gear is fully retracted.

MAIN (Cont.)

K. Operartional Check of Retractable Landing Gear System (cont.)

(2) Airplanes ***not*** equipped with back-up gear extender (cont.)

(c) Emergency Gear Extension:

1 (PA32R-301 SP / 301T SP): Establish level flight cruise condition at ***92 KIAS***. Pull 25 amp hydraulic pump circuit breaker. Place landing gear selector handle in down position and note hydraulic pump does ***not*** operate

2 (PA32R-301 II HP): Establish level flight cruise condition at ***90 KIAS***. Pull 25 amp hydraulic pump circuit breaker. Place landing gear selector handle in down position and note hydraulic pump does ***not*** operate.

3 All models:

a While fishtailing airplane, pull emergency landing gear extension control.

b. Landing gear should extend, and three green locked down position lights should come ON, within 10 seconds.

c. After green position lights are ON, release emergency gear extension control. Reset 25 amp hydraulic pump circuit breaker. Pump should ***not*** operate. If pump does run, it could indicate gear not fully down and locked.

d. Retract gear. system should operate normally.

(d) Gear Warning Horn (all models): Will sound, in conjunction whenever red gear unsafe light is on and throtle is closed. Reduce throttle at a normal rate. The gear warning horn and red light should come on at 14 + 2 inches of manifold pressure.

(e) Flap / Landing Gear Position Warning Horn: With landing retracted, extend flaps. Check that horn sounds before flaps reach 25° position, but not before reaching,or at, 10° position

L. Removal and Installation of Hydraulic Lines

Remove a damaged hydraulic line by disconnecting fitting at each end and by disconnecting where secured by brackets. Refer to Figure 2 as an aid in the location of attaching brackets and bends in lines. Provide a small container for draining line. Install a new or repaired line in reverse. Operate hydraulic pump to purge the system of air. Check fluid level in reservoir.

M. Testing Hydraulic System

Test hydraulic system after performing any service or repairs to determine that it functions properly. Connect airplane to an outside power source in order to conserve the battery. (Refer to External Power Receptacle, Chapter 24.)

– CAUTION –

Turn master switch OFF before inserting or removing external power supply plug.

(1) Place airplane on jacks. (Refer to Jacking, Chapter 7.)

(2) With gear down, master switch ON, and hydraulic pump circuit breaker closed, place landing gear selector switch in the UP position. Hydraulic pump should immediately start operating and the gear retract. Red gear unsafe light on instrument panel should be ON until gear is fully retracted. Hydraulic pump should stop operating after full gear retraction.

MAIN (Cont.)

M. Testing Hydraulic System (cont.)

(3) Place gear selector switch in DOWN position. Gear should extend and lock in position. Gear down lights on instrument panel will be ON when all three gears are locked in position. Inspect hydraulic system for leakage of hydraulic fluid.

(4) Recycle the landing gear to determine that it functions properly.

– CAUTION –

Prior to removing the airplane from jacks, turn master switch on and determine that all three gear down green lights are ON This indicates landing gear is down and locked.

(5) To check operation of landing gear back-up extender, refer to paragraph K, Operartional Check of Retractable Landing Gear System

N. Servicing Hydraulic Pump/Reservoir

(1) Prestolite Pump/Reservoir

– NOTE –

Hydraulic pump/reservoir fluid level must be checked with landing gear down and locked.

(a) Check fluid level in reservoir of combination pump and reservoir at least every 50 hours.

(b) To check fluid level:

1. Remove filler plug located on forward side of pump.
2 Check that fluid is within 1/2 inch of bottom of filler plug hole.
3 If fluid is below this level, add MIL-to bring lH5606A fluid through filler hole.
4 Install filler plug and tighten.

– NOTE –

A small vent hole is located under vent screw head. Retain 1/64 inch clearance between screw head and small vent hole.

(2) Oildyne Pump/Reservoir

(a) Check fluid level in reservoir of combination pump and reservoir at least every 50 hours.

(b) To check fluid level:

1 Remove filler plug located on left rear corner of pump.
2 If fluid level is between ADD zone top ring of and FULL ring, fluid level is satisfactory.
3 If fluid level is in the ADD zone, add MIL-H5606A fluid through dip stick hole to bring level up to at least top ring of ADD zone.
4 Install and tighten dip stick, then back off 1 1/2 turns to allow reservoir to be vented.

GRIDS 2G12 THROUGH 2G15
PAGES 29-40 THRIUGH 29-42
INTENTIONALLY LEFT BLANK

CHAPTER

30

ICE AND RAIN PROTECTION

CHAPTER 30 - ICE AND RAIN PROTECTION

TABLE OF CONTENTS/EFFECTIVITY

CHAPTER SECTION	SUBJECT	GRID NO.	EFFECTIVITY
30-00-00	GENERAL	2G19	July 1, 1993
30-00-00	Description and Operation	2G19	July 1, 1993
30-10-00	AIRFOILS	2H1	July 1, 1993
30-10-00	General	2H1	July 1, 1993
30-10-00	Troubleshooting	2H1	July 1, 1993
30-10-00	Inspection	2H3	July 1, 1993
30-10-00	Ground Procedure	2H3	July 1, 1993
30-10-00	100 Hour Inspection	2H3	July 1, 1993
30-10-00	Operational Check	2H4	July 1, 1993
30-10-00	Electrical Test	2H4	July 1, 1993
30-10-00	Testing For Pressure Leaks	2H4	July 1, 1993
30-10-00	Component Maintenance and Replacement	2H5	July 1, 1993
30-10-00	Filters	2H5	July 1, 1993
30-10-00	Pressure Control Valves	2H5	July 1, 1993
30-10-00	Timer	2H5	July 1, 1993
30-10-00	Pneumatic Boots	2H5	July 1, 1993
30-10-00	Removal of Boots	2H5	July 1, 1993
30-10-00	Repair of Boots	2H6	July 1, 1993
30-10-00	Cold Repair	2H6	July 1, 1993
30-10-00	Tube Area Damage	2H6	July 1, 1993
30-10-00	Vulcanized Repairs	2H7	July 1, 1993
30-10-00	Installing Pneumatic Boots	2H9	July 1, 1993
30-10-00	Preparation of Leading Edges	2H9	July 1, 1993
30-10-00	Preparation of Deicer Boot	2H10	July 1, 1993
30-10-00	Mounting Boot on Leading Edge	2H10	July 1, 1993
30-10-00	Adhesion Test	2H11	July 1, 1993
30-10-00	Maintenance	2H12	July 1, 1993
30-10-00	Icex Application	2H12	July 1, 1993
30-10-00	Resurfacing Conductive Cement	2H13	July 1, 1993
30-10-00	Final Test and Adjustment of Pneumatic System	2H14	July 1, 1993
30-30-00	PITOT AND STATIC	2H17	July 1, 1993
30-40-00	WINDOWS AND WINDSHIELD	2H19	July 1, 1993
30-40-00	Heated Windshield Panel	2H19	July 1, 1993
30-40-00	Removal and Installation of Heated Panel	2H19	July 1, 1993
30-60-00	PROPELLER DEICING SYSTEM	2H21	July 1, 1993
30-60-00	Description	2H21	July 1, 1993
30-60-00	Deicer System Operational Check	2H21	July 1, 1993

CHAPTER 30 - ICE AND RAIN PROTECTION

TABLE OF CONTENTS/EFFECTIVITY

CHAPTER SECTION	SUBJECT	GRID NO.	EFFECTIVITY
30-60-00	PROPELLER DEICING SYSTEM (Cont.)	– –	——
30-60-00	Troubleshooting	2H21	July 1, 1993
30-60-00	USING THE AMMETER	2I4	July 1, 1993
30-60-00	INSPECTION	2I4	July 1, 1993
30-60-00	50 Hour Inspection	2I4	July 1, 1993
30-60-00	100 Hour Inspection	2I5	July 1, 1993
30-60-00	REPAIR PROCEDURES FOR INDIVIDUAL COMPONENTS	2I7	July 1, 1993
30-60-00	Brush Replacement	2I7	July 1, 1993
30-60-00	Repairing Brush Block Assembly	2I7	July 1, 1993
30-60-00	Attaching Individual Brushes to Brush Retainer	2I7	July 1, 1993
30-60-00	Alignment of New Brushes	2I9	July 1, 1993
30-60-00	SLIP RINGS	2I9	July 1, 1993
30-60-00	Machining of Slip Rings	2I9	July 1, 1993
30-60-00	Replacement of Slip Rings	2I9	July 1, 1993
30-60-00	DEICER BLADES	2I10	July 1, 1993
30-60-00	Resistance Check of Deicer Blade	2I10	July 1, 1993
30-60-00	Replacement	2I10	July 1, 1993
30-60-00	Repair of Deicer Lead Strap	2I11	July 1, 1993
30-60-00	Removal of Deicer	2I12	July 1, 1993
30-60-00	Blade Preparation	2I12	July 1, 1993
30-60-00	Cement Application	2I12	July 1, 1993
30-60-00	Installation of Deicer and Required Materials	2I13	July 1, 1993
30-60-00	Preparation and Application of Sealer	2I15	July 1, 1993
30-60-00	Wrinkled Deicers	2I16	July 1, 1993
30-60-00	Electrical Check	2I16	July 1, 1993
30-60-00	Installation of Deicer Straps and Wire Harness	2I17	July 1, 1993
30-60-00	Balancing	2I19	July 1, 1993
30-60-00	Final Electric Check	2I19	July 1, 1993
30-60-00	Other Components	2I19	July 1, 1993
30-60-00	Timer Test (Prop Deice)	2I19	July 1, 1993
30-80-00	DETECTION	2I23	July 1, 1993
30-80-00	Ice Viewing Light	2I23	July 1, 1993
30-80-00	Removal of Ice Viewing Light	2I23	July 1, 1993
30-80-00	Installation of Ice Viewing Light	2I23	July 1, 1993

ICE AND RAIN PROTECTION

A. General

Material contained herein provides information for general maintenance characteristic of ice protection system. If further information is necessary contact product manufacturer or Piper Service Representative.

B. Description and Operation

Ice protection system is made up of five separate systems: a pneumatic deice system, an electrical prop deice system, an electrically heated windshield panel, heated pitot/stall warning system, and an ice detection light installation. These systems can be installed individually or in any combination. Except for heated pitot/stall warning system, systems are controlled from a control panel on center instrument panel.

The pneumatic system, which utilizes boots to displace ice from leading edges of flight surfaces, requires installation of a second, high capacity, air pump. Along with boots and related plumbing, system also includes a pressure control valve, a vacuum regulator, three deice flow valves, three pressure switches and a timer module. Pressure control valve is mounted on firewall, and vacuum regulator is located in forward baggage compartment. Deice flow valves, pressure switches and timer module are mounted under floor on right side of fuselage as shown in Figure 1.

Boots are attached to leading edge of wings, vertical stabilizer and stabilator. Boots are of a fabric reinforced rubber containing built-in, span-wise inflation tubes (refer to Figure 2). A ply of conductive neoprene is cured to each boot surface to dissipate static electric charges and prevent damage to boots from those charges, as well as preventing a fire hazard after each flight. Attached to flight surface with cement, boots are connected to the plumbing, through skin, by flexible and/or aluminum air connections.

Operation of pneumatic deice system is controlled by a momentary single pole, single throw switch on control panel (refer to Figure 3). During normal operation, vacuum provided continuously from pump inlet is directed to boots system through deice flow valves to hold boots down in flight. The pressure control valve which is closed during normal operation (boots deflated) allows air pressure from pump to be dumped overboard. Activation of momentary switch activates timer in timer module, which starts its 18 second cycle, that activates pressure control valve and three deice flow valves in following sequence: 6 seconds for inboard wing boots, 6 seconds for outboard wing boots, and 6 seconds for tail boots. Having activated switch, timer is activated to start first 6 second cycle. Pressure begins to build up in system and upon reaching 8 psi, a pressure switch on deice flow valve illuminates a green indicator light on control panel. Pressure continues to build (max. pressure 18 psi) until 6 second cycle is completed. At this point power is removed from deice flow valve and next group of boots is activated. After three 6 second sequences are completed, pressure control valve is closed and system pressure is dumped overboard. As pressure decreases, pressure switch on control valve is deactivated, extinguishing green light. With pressure dumped from system, deice valves again direct vacuum to boots. System now can be reactivated, if necessary, through momentary switch on control panel. System should not be operated more than once each 60 seconds to obtain maximum service life.

ICE AND RAIN PROTECTION (Cont.)

B. Description and Operation (cont.)

Propeller deice system, which can be installed by itself or included in a package with others of ice protection system, is designed for both two- and three-bladed propeller installations. Each propeller deice system consists of an electrically heated deicer bonded to each propeller blade, slip ring assembly with brush block assembly to transfer electrical power to rotating deicers, a timer, an ammeter, a control switch-circuit breaker, shunt, together with wiring harnesses to complete circuit. Power is drawn from aircraft electrical system.

To conserve electrical power current is cycled to deicer heaters at timed intervals rather than continuously. Each has two separate heaters; one for outer half and one for inner half. By heating all outer or inner heaters, rotational balance is held during deicing. Current is drawn from airplane electrical system through switch, ammeter and timer. Timer successively delivers current via slip ring and brush block arrangement to (Phase 1) outer heaters on propeller and then inner heaters on propeller. Timer energizes each of these phases in turn for about 30 seconds and then repeats cycle as long as control switch is on. See cycle sequence. (Refer to Figures 8 and 9.) System may be used continuously inflight if needed.

– NOTE –

Heating may begin at any phase in cycle depending on timer position when switch was turned off from previous use.

Deicers contain special heater wires protected by fabric plies and by oil and abrasion-resistant rubber. Side of deicer cemented to propeller has a dull finish whereas air side finish is glossy. Each deicer has separate lead for inboard and a third lead which is a common ground. These leads are so marked. An unmarked ground can be identified by using an ohmmeter across three possible pairs of leads. One pair will show twice resistance of other pairs. Latter are hot leads and lead excluded from pair that shows twice resistance of other pairs is ground lead.

To transfer electrical power to rotating deicer, a brush block assembly is mounted to engine or similar stationary member and has brushes which are spring loaded to press against revolving slip rings. Slip ring assembly is provided as a slip ring gear assembly which replaces original starter ring gear of engine.

Timer is a sealed unit. If found inoperative, it must be replaced as an assembly - no field repairs are authorized.

Ammeter is designed for each particular system and it is therefore important that correct replacement part number be used if replacement should be required. In event of low aircraft battery voltage (very possible in ground check), ammeter reading will be lower than at full voltage. Provided ammeter needle reads in shaded range on scale, (full aircraft voltage) current flow is considered as normal.

A heated windshield panel can also be installed as a separate item or with any combination of systems. Installation is controlled by a circuit breaker/switch on control panel along with use of a glass panel imbedded with wire filaments. Panel is mounted to a metal frame and secured by two screws to fuselage, just outside of windshield on pilot's side. Frame is hinged at its base to facilitate cleaning of windshield and panel. When not in use, panel can be removed by removing two attaching screws and harness from fuselage.

ICE AND RAIN PROTECTION (Cont.)

B. Description and Operation (cont.)

Pitot and stall warning heat systems are operated as a single system when they are installed. It should be noted that although pitot heat system can be installed in aircraft by itself, stall warning heat combination can only be included if pitot heat system is also installed. These system(s) utilize a switch in switch cluster to left of pilot's side of instrument panel. Other parts of system(s) include a heated pitot head, heated lift detectors (inner and outer), and two circuit breakers (one for each part of the system).

For seeing and detecting ice at night, an ice detecting light can also be included with systems. Light, controlled by a switch on deice control panel, is mounted on left side of forward baggage compartment.

– NOTE –

Refer to Chapter 91 for wiring schematics not found in this chapter .

THIS SPACE INTENT IONALLY LEFT BLANK

ICE AND RAIN PROTECTION (Cont.)

B. Description and Operation (cont.)

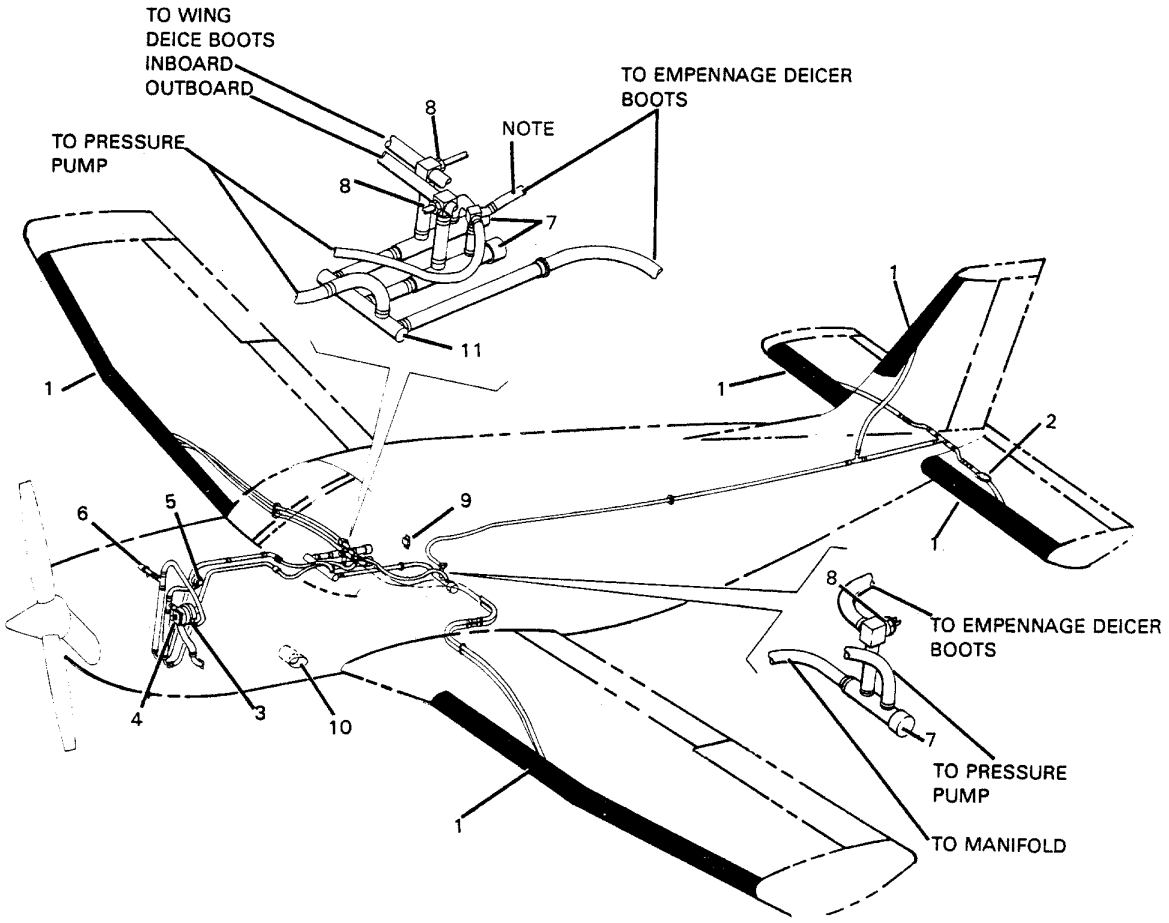

1. DEICE BOOTS
2. STABILATOR DEICE ACCESS DOOR
3. PUMP, DRY AIR
4. COUPLING ASSEMBLY, AIR PUMP
5. REGULATOR, PRESSURE
6. VALVE, PRESSURE CONTROL
7. VALVE, DEICE FLOW (3 REQ.)
8. SWITCH, PRESSURE (3 REQ.)
9. TIMER
10. LIGHT, ICE VIEWING
11. MANIFOLD

NOTE
DISCONNECT THIS VACUUM LINE AND INSTALL VACUUM GAUGE WHEN PERFORMING "FINAL TEST AND ADJUSTMENT OF PNEUMATIC SYSTEM" AS DESCRIBED IN THIS CHAPTER.

Pneumatc Deice System Installation
Figure 1

ICE AND RAIN PROTECTION (Cont.)

B. Description and Operation (cont.)

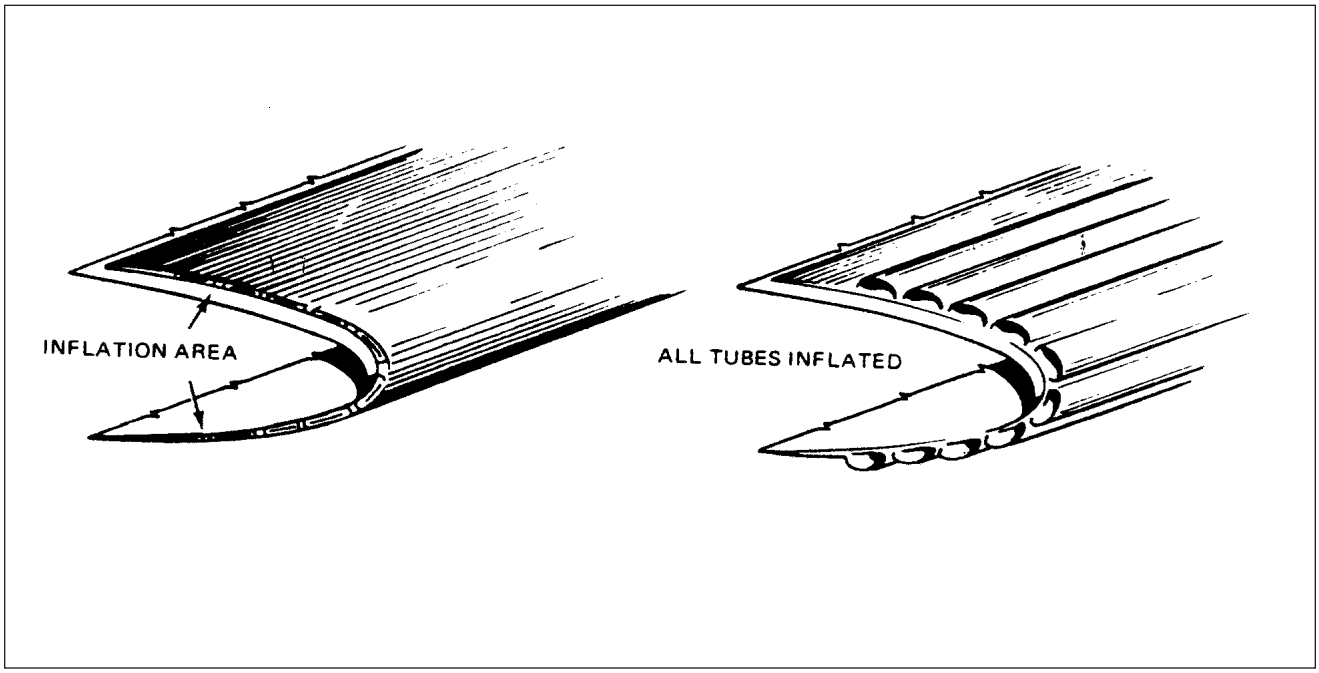

Pneumatic Deicer Boot Operation
Figure 2

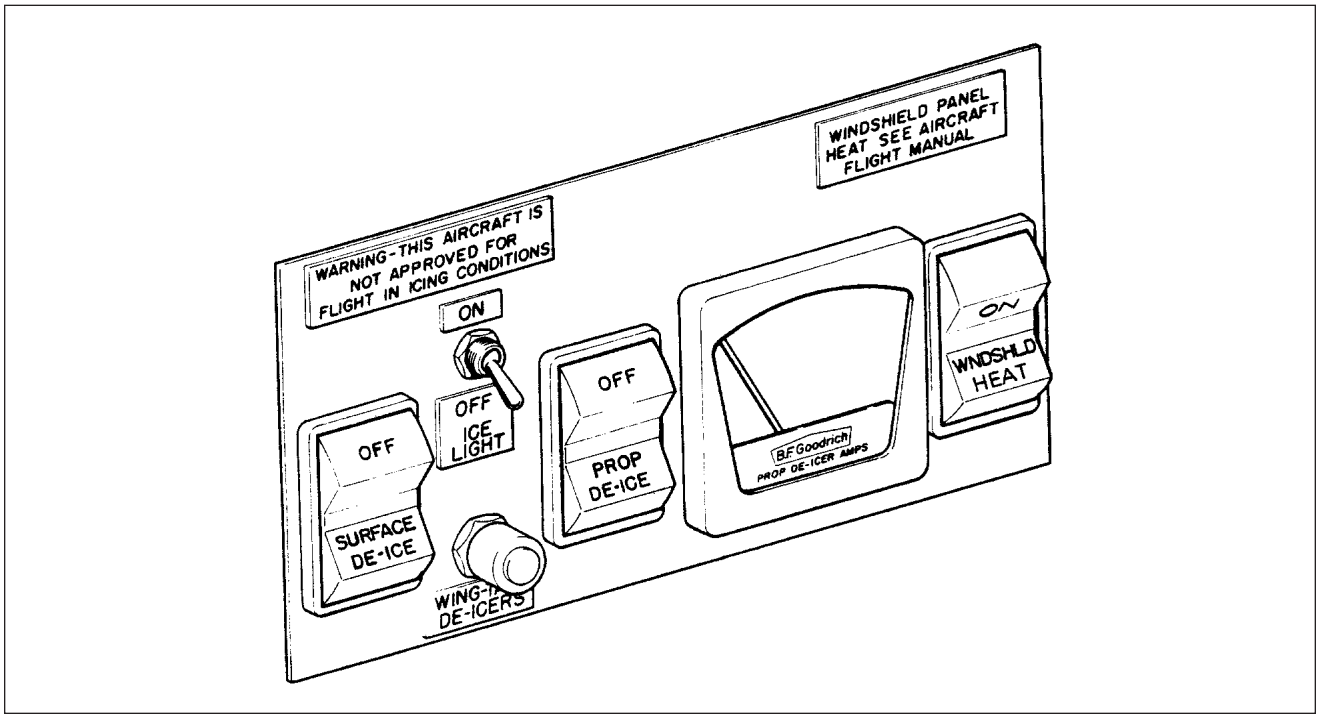

Deice Control Panel
Figure 3

INTENTIONALLY LEFT BLANK

AIRFOILS

A. General

Airfoil deicing is performed by pneumatic deicing system. System utilizes inflatable boots to clear ice off leading edges of wings, vertical stabilizer, and stabilator.

Boots are of a fabric reinforced rubber construction containing built-in span wise inflation tubes. Attached to leading edges of flight surfaces with cement, they are connected through skin by aluminum and/or flexible rubber air connection stems.

A ply of conductive neoprene is provided on surface to dissipate static electric charges. These charges, if allowed to accummulate, would eventually discharge through boot to metal skin beneath creating static interference with radio equipment, and possible punctures in rubber. Also such static charges would constitute a temporary fire hazard after each flight.

For operation descriptions refer to general description at beginning of chapters.

B. Troubleshooting

The troubleshooting chart contained herein is based on the premise, except as specified, that engine driven pneumatic pumps and electrical system are operating properly. It is further assumed that system components were installed properly.

CHART 1
TROUBLESHOOTING PNEUMATIC DEICE SYSTEM (Sheet 1 of 2)

Trouble	Cause	Remedy
Deicers do not inflate. Engine operating at minimum cruise rpm.	Open circuit breaker.	Push circuit breaker to reset.
	System connection loose or wire broken.required.	Tighten or repair as
	Timer not functioning.	Test or replace as required.
	Control valves not functioning.	Make electrical test. Check for sticking poppet. Clean. Insure that both vent ports on solenoid are open.
	Lines blocked or not connected.	Blow out lines and inspect connections. Make air leakage test.

AIRFOILS (Cont.)

B. Troubleshooting (cont.)

CHART 1
TROUBLESHOOTING PNEUMATIC DEICE SYSTEM (Sheet 2 of 2)

Trouble	Cause	Remedy
Deicers inflate slowly (inflation time - 6 seconds).	Lines partially blocked or not connected securely.	Blow out lines and inspect connections. Make air leakage test.
	Deflate valve not functioning properly.	Insure that both vent ports on solenoid are open.
	System pressure not ports on ports on reached.	Check performance to manufacturers specifications.
	Deicer puncture.	Repair per specification or replace.
Deicers DEFLATE slowly.	Lines partially blocked.	Inspect and blow out lines.
	Deflate valve not functioning properly.	Insure that both vent ports on solenoid are open.
Deicers inflate, indicator light does not function. (Check that deicer boot switch is (ON.)	Indicator lamp burned out.	Replace lamp.
	System pressure not being reached.	Check “Deicers Inflate Slowly” above.
	Pressure switch not functioning.	Make electrical test and replace if required.
	Wires loose or broken. Poor grounding of pressure switch.	Make electrical test. Repair or replace broken wires. Check for proper ground.
Deicer boots do not hold their form in flight or vacuum to the system inadequate.	Deflate valve not functioning properly by not moving to full.	Remove and troubleshoot valve. Replace if necessary.
	Vacuum line restricted.	Disconnect line from instruments and deflate valve, and blow out line.
	Broken line.	Inspect system and repair.

AIRFOILS (Cont.)

C. Inspection

A ground check of entire deicer system should be made at least every 100 hours.

Before checking system, all deicers should be inspected for damaged areas and repaired according to procedure in this section outlining cold patch or vulcanized repairs. In order to check system, refer to Chart 2 and the paragraph Final Test and Adjustment of Pneumatic System for operating pressure and check procedures.

CHART 2
OPERATING PRESSURES

Recommended OperatingPressure PSIG	Test Pressure PSIG	
	Minimum	Maximum
15	13	17
18	16	20

D. Ground Procedure

After test pressure range is established, connect an external source of air providing this pressure and a pressure gauge to pneumatic deice line at manifold assembly. Disconnect deice line from manifold to accomplish test. Deicer system should be within one psig of recommended operating pressure with each inflation cycle.

If deicers do not reach operating pressure, check inflation time to ascertain that solenoid valves are open specified length of time (six seconds). If this is not cause of trouble, or if boots deflate slowly, lines or valves may be plugged; then lines should be disconnected and blown clear.Check timing of system through several complete cycles. Boots ON six seconds, then OFF. Wing and empennage boots operate separately. If cycle time is off specified time, determine and correct the difficulty.

Inflation must be rapid to provide efficient deicing. Deflation should be complete before next inflation cycle of the boots.

E. 100 Hour Inspection

(1) Make the following checks at each 100 hour inspection of airplane:
   (a) Carefully inspect deicers for evidence of damage or deterioration. Repair or replace damaged boots.
   (b) Resurface boots showing signs of considerable wear or deterioration.
   (c) Inspect all pneumatic deicing system hose connections. Replace deteriorated sections on non-kink hoses.
   (d) Check operation of boots and operating pressure of the system as outlined in this section.
   (e) If new or replacement boots have been installed, check tube inflation to make ensure air connection stems have been properly connected.
   (f) Disconnect all system drain lines and check for proper drainage.
   (g) Check on-off control switch for freedom of action. Check associated electric wiring.
   (h) Clean or replace air filters.

AIRFOILS (Cont.)

E. 100 Hour Inspection (cont.)

(2) Operational Check

Operationally check pneumatic deicing system every 100 hours. The check can be done on the ground. Before performing operational check, perform a visual inspection to determine condition of deicer boots. Correct any areas in need of repair prior to operational check.

With engine operating, activate deicing system switch. Observe operation of deicers carefully for evidence of malfunctioning. Look for tubes which leak or fail to inflate and deflate properly.

F. Electrical Test

With engine OFF, turn airplane battery switch ON.

(1) Timer: Activate deicer system switch. The timer should begin to operate immediately and complete one full cycle of the system. If the timer does not function:
   (a) Reset circuit breaker and recheck.
   (b) Check circuit for power source, through circuit breaker, to switch to timer, to ground.
   (c) Replace timer.

(2) Pressure Control Valve: The pressure control valve is located in engine compartment. Activate system switch to ON position. Solenoid valve should be actuated immediately for 6 seconds, as evidenced by an audible click. If solenoid valve does not function:
   (a) Disconnect electrical connector at solenoid. Attach test light or other suitable test equipment to connector and activate system switch. If test equipment does not indicate complete circuit:
      1 Check circuit from timer, to solenoid connector, to ground.
      2 Replace timer.
   (b) Use ohmmeter to check solenoid for open circuit. If solenoid circuit is open, replace solenoid valve.
   (c) Unscrew solenoid.

– CAUTION –

Do not loosen steel hex actuator pin or valve poppet.

   (d) Attach connector to solenoid. Insert hex actuator pin into solenoid. Activate system switch. If pin is not ejected from solenoid, replace control valve.

G. Testing For Pressure Leaks

(1) Test can be performed in engine compartment.
(2) Cap overboard port of pressure valve.
(3) Connect a source of clean air to pressure valve inlet port. Inlet pressure source must supply a minimum of 18 psig to system. By means of a hand operated valve, trap pressure in deicer system. Observe system for leakage. Leakage rate should not exceed a pressure drop of 3.0 psig per minute.
(4) Remove test equipment, lubricate all threads, and replace all system components.

AIRFOILS (Cont.)

H. Component Maintenance and Replacement

(1) Filters
Air for the system is supplied through the vacuum system. Refer to Chapter 37 for replacement of appropriate filter(s).

(2) Pressure Control Valve
After 100 hours of engine operation, pressure control valve poppet should be checked for sticking. Determine if valve poppet is sticking by performing electrical test. If solenoid checks satisfactory, remove valve poppet and clean pressure valve bore and poppet. To clean:

(a) Remove engine upper cowling to gain access to valve.
(b) Remove electrical connector. Unscrew solenoid.

– CAUTION –

Do not lose steel hex actuator pin.

(c) Remove valve poppet. It may be necessary to apply slim nose pliers to pin projection to pull poppet from valve.
(d) Thoroughly clean valve bore and poppet with commercial hydrocarbon type solvent.
(e) Assemble valve and solenoid.

(3) Timer
No field maintenance is recommended. For repair or replacement, contact your B. F. Goodrich dealer or Piper distributor.

I-Pneumatic Boots

(1) Removal of Boots
Remove deicer boots in a well ventilated area to avoid difficulty from solvent fumes. Materials required to remove boots are: Kelite A-727-B and a pressure handle squirt can. Proceed as follows:

– NOTE –

Disconnect line fittings from boot fittings.

(a) Starting at one corner of upper trailing edge, apply a minimum amount of solvent to seam line while tension is applied to peel back corner of deicer.
(b) Using a pressure handle squirt can filled with solvent, separate deicer boot from surface for a distance of 4 inches all the way along upper trailing edge of deicer boot.
(c) Area between deicer and wing, which has now been separated, will act as a reservoir for solvent. Therefore, deicer can be pulled down towards boot leading edge with uniform tension.
(d) From center line of boot leading edge to lower boot trailing edge of deicer, use pressure handle squirt can to soften bond between deicer boot and wing skin.
(e) Should deicer boot to be removed will be scraped, remove boot by stripping it in sections parallel to tubes (spanwise).
(f) Use Kelite A-727-B (approximately one quart per 30 square feet) to clean dry cement off exposed wing area and clean area thoroughly with MEK.

AIRFOILS (Cont.)

I-Pneumatic Boots (cont.)

(2) Boot Repair

Deicer repairs are classified as: cold (temporary) repairs, which are made with boot installed on airplane, and vulcanized repairs, which are made on demounted boot in shop.

(a) Cold Repair

1 Materials and supplies for making cold repairs are listed in Chart 3.

2 Scuff Damage.

This is the most common type of damage and, in most cases, is not necessary to make a repair. When scuff is severe and has caused removal of entire thickness of surface ply in spots (brown natural rubber underneath is exposed), repair damage using Part No. 74-451-16 and proceed as follows:

a Clean area around damage with a cloth dampened slightly with solvent. Buff area around damage with steel wool so that it is moderately but completely roughened. Wipe buffed area with a clean cloth slightly dampened with solvent to remove all loose particles.

b Select a patch of ample size to cover damaged area. Apply one even coat of cement, Part No. 74-451-20, to patch and corresponding damaged area. Allow cement to set a couple of minutes until tacky.

c Apply patch to deicer with an edge, or center adhering first. Work down remainder of patch carefully to avoid trapping air pockets. Thoroughly roll patch with stitcher-roller,Part No. 74-451-73, and allow to set for ten to fifteen minutes.

d Wipe patch and surrounding area from center outward with a cloth slightly dampened with solvent. Apply one light coat of 3M EC-801 cement to seal and feather edge of patch to deicer.

e Satisfactory adhesion of patch to deicer will be reached in four hours. In a minimum of 30 minutes, inflate deicer to determine if adhesion of patch is adequate.

(b) Tube Area Damage

Repair cuts, tears, or ruptures to tube area with fabric reinforced patches, Part No. 74-451-16, depending on size of damage.

– NOTE –

These patches are manufactured so that they will stretch in one direction only. Be sure to cut and apply the patch selected so that stretch is in the widthwise (spanwise) direction of the inflatable tubes.

1 Select a patch of ample size to cover damage and to extend to at least 5/8 inch beyond ends and edges of cut or tear. If none of the patches is of proper size, cut one to size desired from one of the larger patches. If this is done, bevel edges by cutting with shears at an angle.

AIRFOILS (Cont.)

I-Pneumatic Boots (cont.)

(2) Boot Repair (cont.)

2 Buff area around damage with buffing stick, Part No. 74-451-75, so that surface is thoroughly roughened.

3 Apply patch to deicer with stretch in widthwise direction of inflatable tubes, sticking edge of patch in place, working remainder down with slight pulling action so injury is closed. Do not trap air between patch and deicer surface.

(c) Loose Surface Ply in Dead Area (Non-Inflatable Area)

1 Peel and trim loose surface ply to where adhesion of surface ply to deicer is good.

2 Scrub (roughen) area in which surface ply is removed with steel wool. Scrubbing motion must be parallel to cut edge of surface ply to prevent loosening it. Scrub with steel wool and Toluol directly over all edges, but parallel to edges or surface ply to taper them down to tan rubber ply.

3 Cut a piece of surface ply material, Part No. 74-451-23, to cover damaged area and extend at least one inch beyond in all directions.

4 Mask off damaged boot area 1-1/2 inch larger in length and width than size of surface ply patch. Apply one coat of cement, Part No. 74-451-20, to damaged area and one coat of patch. Allow cement to set until tacky. Roll surface ply to deicer with 2 inch rubber roller, Part No. 74-451-74. Roll edges with stitcher-roller, Part No. 74-451-73. Apply just enough tension on surface ply when rolling to prevent wrinkling and be careful to prevent trapping air. If air blisters appear after surface ply is applied, remove them with a hypodermic needle.

5 Clean excess cement from deicer with solvent.

(d) Loose Surface Ply in Tube Area . Loose surface ply in tube area is usually an indication of deicer starting to flex fail. This type of failure is more easily detected in form of a blister under surface ply when deicer is pressurized. If this type of damage (or void) is detected while still a small blister (about 1/4 or 3/8 inch diameter) and patched immediately, service life of deicer will be appreciably extended. Apply repair patch as outlined in Paragraph I, (2), (a), 2.

(e) Damage to Fabric Back Ply of Deicer During Removal

If cement has pulled loose from wing skin and adhered to back surface of deicer, remove it with steel wool and MEK. In those spots where coating has pulled off fabric, leaving bare fabric exposed, apply at least two addi- tional coats of cement, 1300L. Allow each coat to dry thoroughly.

(3) Vulcanized Repairs

Due to variety of boot damage possible, it is recommended that B. F. Goodrich Company be contacted so they can determine extent of damage and whether it is repairable by vulcanized method or not. Overall condition of deicer boot must be given careful consideration before deciding on any repairs. Damages can vary from minor punctures which may be easily repaired, to extensive ripping of tube or stretch areas which may make repairs exceedingly difficult or impossible. Determination where this division between repairable and unrepairable damage exists will depend upon careful judgment of the inspector. For this reason, Piper recommends contacting B. F. Goodrich Company at Akron, Ohio.

AIRFOILS (Cont.)

I-Pneumatic Boots (cont.)

Chart 3
Material and Supplies For Cold Repair (Sheet 1 of 2)

Part No.	Quantity	Description
74-451-C (FSN1650-856-7939)	1	Cold Patch Repair Kit (B. F. Goodrich Co.)
74-451-11	1/2 pt. can	A-56-B Conductive Cement
74-451-16	30 pcs.	Small Oval Patch 1-1/4 x 2-1/2 in.
74-451-17	30 pcs.	Medium Oval Patch 2-1/2 x 5 in.
74-451-18	10 pcs.	Large Oval Patch 5 x 10 in.
74-451-19	3 pcs.	Patch 5 x 19 in.
74-451-20	(2) 1/2 pt.	*No. 4 Cement (patching only)
74-451-70	2	Cement Brush 1/2 in.
74-451-73	1	1/8 in. Steel Stitcher
74-451-75	6	Emery Buffing Sticks
74-451-87	1	Buffing Shield
*This cement will give best results with the patches in this kit.		
The following items may be procured from the B. F. Goodrich Co., Akron, Ohio, or other manufacturer, as required:		
74-451-21	6 ft. roll x 6 in. wide	Type 21 or 22 Fillet
74-451-22	15 ft. roll x 2 in. wide	Neoprene Coated Splicing Tape
74-451-23	4 ft. roll x 8 in. wide	Neoprene Surface Ply
74-451-24 (FSN8040-628-4199 and or FSN8040-514-1880)	1 quart	†EC-1403 Cement and/or /EC-1300 L
74-451-74	1	2-1/2 in. Sponge Rubber Roller
†Minnesota Mining and Manufacturing Company, Adhesives Division, 411 Piquette Ave., Detroit, Michigan.		

AIRFOILS (Cont.)

I-Pneumatic Boots (cont.)

Chart 3
Material and Supplies For Cold Repair (Sheet 2 of 2)

Part No.	Quantity	Description
The following materials may be obtained from local supply:		
		Toluol
	As required	Clean, Lint-Free Cloths (preferably cheese cloth)
	Rolls	1 in. Masking Tape
	1	Sharp Knife
	6 ft. long	Steel Measuring Tape
	1	Fine Sharpening Stone
	As required	Steel Wool Pads
	As required	Hypodermic needles (22 gauge or smaller)
MethylEthylKetone (MEK) can be used instead of Toluol, however MEK causes very rapid drying and provides only 10 seconds working time compared with 40 seconds for Toluol.		

(4) Installing Pneumatic Boots

– NOTE –

The following procedures assume the aircraft is set up with the provisions for the necessary connections and hardware.

Balance stabilator per instructions in Chapter 27 of this manual.

(a) Preparation of Leading Edges
If the leading edges are painted, remove all paint including zinc chromate primer.

1 With one (1) inch masking tape, mask off leading edge boot area, allowing 1/2 inch margin for non-recessed boots. Take care to mask accurately, thus eliminating the need for cleaning off excess cement later.

2.Clean metal surfaces thoroughly, at least twice, with MEK or Acetone. For final cleaning, wipe solvent film off quickly with a clean, dry cloth before it has time to dry.

– NOTE –

It is permissible to install deicers on alodined or anodized surfaces.]

3 Fill gaps of skin splices that lead under deicers with sealing compound EC-801.

AIRFOILS (Cont.)

I-Pneumatic Boots (cont.)

(4) Installing Pneumatic Boots (cont.)

(a) Preparation of Leading Edges (cont.)

4 Remove sump plugs from air connection grommets. In some cases, it will be necessary to remove sections of doped fabric used to cover air connection holes. Draw out ends of non-kink hose section so that they protrude through the connection holes in leading edge. If hose is cracked or deteriorated, replace with new hose.

(b) Preparation of Deicer Boot

Moisten a clean cloth with MEK or Acetone and carefully clean the rough, back surface of boot at least twice. Change cloths frequently to avoid recontamination of cleaned areas.

(c) Mounting Boot on Leading Edge

Thoroughly mix 1300L cement before using. Apply one even brush coat to cleaned back surface of boot and to cleaned metal surface. Allow cement to air dry for a minimum of one hour. Apply a second coat to both surfaces and allow to air dry a minimum of one hour. Ambient temperature for installation should be held between 40 and 110F. However, longer drying time of cement coats may be required as humidity approaches 99%. Deicer and leading edge may be cemented for a maximum of 48 hours before actual installation, if cemented parts are covered and kept clean. Snap a chalk line along leading edge of airfoil section. Intensify chalk line on leading edge and white reference line on boot with a ball point pen. Most boots are made with an excess of material at inboard and outboard edges for final trimming after installation and some recessed boots trim on upper and lower edges. Securely attach hose to deicer connection using clamps or safety wire.

1 Holding backside of boot close to leading edge, fasten end of each non-kink hose to corresponding air connection stem. Tinnerman or other suitable non-kink hose clamps should be used for this purpose. Tighten each clamp with a pair of slip joint pliers but do not squeeze clamp so tight that hose is damaged.

– NOTE –

If non-kink hose clamps are not available, wrap each hose connec- tion with several turns of friction tape. Over tape, wrap two separate bindings of safety wire, about 1/2 inch apart. Each of these bindings should consist of several turns of wire. Twist together ends of each binding to tighten. Press twisted ends down against hose. Finally, wrap wire with several additional turns of friction tape.

2 Push hose connections into leading edge grommets or seals as case may be. Obtain sufficient personnel to hold boot steady during installation. (Limit handling cemented side of boot with fingers.) Continue installation by reactivating cement along center line leading edge surface and boot in span wise strips approximately six inches wide. Rubber roll deicer firmly against wing leading edge, being careful not to trap any air under deicer. Always roll parallel to inflatable tubes. Position deicer center line to coincide with leading edge center line. Hold boot in this position while reacti- vating about three inches around connections and around corresponding holes in leading edge, using a clean, lint-free cloth moistened with Toluol. Insert connections in leading edge holes when cement has dried to a tacky state and rubber roll boot to leading edge in tackified area.

3 If deicer should attach “off course”, use MEK to remove and reposition properly. Avoid twisting or sharp bending of the deicer.

AIRFOILS (Cont.)

I-Pneumatic Boots (cont.)

(4) Installing Pneumatic Boots (cont.)

(c) Mounting Boot on Leading Edge (cont.)

4 Rubber roll, apply pressure over entire surface of deicer. All rolling should be done parallel to in- flatable tubes. Roll trailing edges with a narrow stitcher-roller.

– CAUTION –

Avoid excessive soaking or rubbing of cement which could remove cement from surface.

5 Remove all masking tapes and clean surfaces carefully with MEK or Toluol so that no solvent will run under deicer edges.

6 Apply masking tape to deicer edges where exposed trimmed ends or gaps between sections are to be filled with MMM EC-801 sealing compound.

7 Apply masking tape to deicer approximately 1/4 inch in from trailing edges and tape wing skin approximately 1/4 inch from trailing edges, both forming a neat, straight line.

8 Apply two brush coats of A-56-B cement to surfaces between tapes and to EC-801 seams, being sure that conductive coating (A-56-B) is continuous from deicer surface to wing painted surface. A drying time of drying time of 10 to 15 minutes between coats should be allowed.

9 Remove tapes immediately after applying A-56-B cement (before cement dries).

– CAUTION –

Cements and solvents used for installation are flammable and their fumes slightly toxic. Therefore, all work should be done in a well ventilated area away from any sparks or flames. (Use of solvent resistant type gloves is recommended.)

– NOTE –

Application of A-56-B conductive cement is not necessary on deicers that have CONDUCTIVE noted on labels.

In the event it becomes necessary to remove or loosen installed boots, use MEK or Toluol to soften adhesion line. A minimum of this solvent should be applied to seam line while tension is applied to peel back boot. This removal should be slow enough to allow solvent to undercut cement, thus preventing injury to part. Excessive quantities of solvent must be avoided.

(5) Adhesion Test

Using excess boot material trimmed from ends of any wing and empennage deicers, prepare one test specimen for each deicer installed. This specimen should be a 1 x 8 inch full thickness strip of boot material cemented to wing skin adjacent to installed boot following identical procedure used for installation. Leave one inch of strip uncemented to attach a clamp. Four hours or more after installation, attach a spring scale to uncemented end of each strip and measure force required to remove strip at rate of one inch per minute. Pull should be applied 180 to surface. (Strip doubled back on itself.)

AIRFOILS (Cont.)

I-Pneumatic Boots (cont.)

(5) Adhesion Test (cont.)

A minimum of five pounds tension (pull) shall be required to remove test strip. If less than five pounds is required, then acceptability of boot adhesion shall be based on the following tests:

(a) Carefully lift one corner of boot in question sufficiently to attach a spring clamp.

(b) Attach a spring scale to this clamp and pull with force 180 to surface and in such a direction that boot tends to be removed on the diagonal.

(c) If a force of five pounds per inch of width can be exerted under these conditions, installation shall be considered satisfactory. Remember, width increases as corner peels back.

(d) Cement corner following previous procedure.

(e) Failure to meet this requirement shall result in reinstallation of boot.

– NOTE –

Possible reasons for failure are: dirty surfaces, cement not reacti- vated properly, cement not mixed thoroughly. Corrosion of metal skin may occur if good adhesion is not attained, especially around rivet heads and metal skin splices.

If these adhesion requirements are met, airplane may be flown immediately. Do not inflate deicers within 48 hours of installation.

J. Maintenance

Clean deicers when airplane is washed with a mild soap and water solution. Do not use petroleum products to clean boots as these are injurious to rubber. In cold weather, wash boots with airplane inside a warm hangar if possible. If cleaning is to be done outdoors, heat soap and water solution before taking it out to the airplane. If difficulty is encountered with water freezing on boots, direct a blast of warm air along region being cleaned, using a portable type ground heater.

K. Icex Application

B. F. Goodrich Icex is silicone base material specifically compounded to lower the strength of adhesion between ice and the rubber surfaces of airplane deicers. Icex will not harm rubber and offers added ozone protection.

Properly applied and renewed at recommended intervals, Icex provides a smooth polished film that evens out microscopic irregularities on surface of rubber parts. Ice formations have less chance to cling. Ice is removed faster and cleaner when deicers are operated.

It should be emphasized that Icex is not a cure-all for icing problems. Icex will not prevent or remove ice formations. Its only function is to keep ice from initially getting a strong foothold, thus making removal easier.

One 16 ounce pressurized can of Icex will cover deicer surfaces of average light plane approximately three times. It is also available in quart cans (unpressurized).

AIRFOILS (Cont.)

K. Icex Application (cont.)

Before applying Icex, surfaces to which compound is to be applied shall be thoroughly cleaned to remove dirt and grease by rubbing with non-leaded gasoline. Surfaces shall then be washed with mild soap and water, rinsed with clean water, and allowed to dry.

Shake Icex can well. Compound shall be applied sparingly with a felt pad, soft cloth, or paper wiper. Compound shall be rubbed with a clean soft cloth or wiper until a smooth gloss is obtained. Use of excessive compound will result in a sticky surface which will collect dust and dirt, and reduce its efficiency.

– CAUTION –

Use only with adequate ventilation. Avoid prolonged or repeated breathing of vapor. Avoid prolonged or repeated contact with skin. Keep compound away from open flames and electric heaters; decomposition products may be harmful.

Due to natural abrasive effects on leading edges of deciers during flight, reapply Icex every 150 flight hours on wings and empennage deicers.

L. Resurfacing Conductive Cement

The following materials are required to remove and replace old, damaged coating:

(1) Fine grit sandpaper.
(2) Two inch paint brush.
(3) One inch masking tape.
(4) Conductive neoprene cement, No. A-56-B, B. F. Goodrich Company.
(5) Isopropyl Acetate, Federal Specification TT-I-721, as cleaning or thinning solvent.
(6) Alternate solvent (Toluol or Toluene may be used as an alternate for Isopropyl Acetate).

– CAUTION –

Cements and solvents used for resurfacing are flammable and their fumes slightly toxic. Therefore, all work should be done in a well ventilated area away from any sparks or flames.

During cold weather, place airplane in a warm hangar and locate so that boots are in line with one or more blast heaters. Do resurfacing before any other work on airplane to allow as much time as possible for new coat to cure.

– NOTE –

If for some reason resurfacing cannot be done indoors, it may be deferred at discretion of inspector until a warm, clear day permits work to be satisfactorily accomplished outdoors.

Clean deicer thoroughly with Isopropyl Acetate.

(1) Roughen entire surface of boot, using a fine grit sandpaper.
(2) Clean surface again with clean, lint-free cloth moistened with cleaning solvent.

AIRFOILS (Cont.)

L. Resurfacing Conductive Cement (cont.)

(3) Apply masking tape beyond upper and lower trailing edges, leaving 1/4 inch gap of bare metal.
(4) Mask off any legible deicer brands.
(5) Apply one brush coat of A-56-B cement to deicer and allow to dry at least one hour. Then apply second coat and allow to dry at least four hours before operating deicers. Plane may be flown as soon as cement is dry.

– NOTE –

If A-56-B cement has aged 3 months or over, it may be necessary to dilute cement with Isopropyl Acetate to obtain proper brushing consistency. Mix thoroughly, approximately 5 parts cement to one part Isopropyl Acetate.

M Final Test and Adjustment of Pneumatic System

(1) Gain access to pneumatic deice system lines and fittings located beneath floor panel aft of main spar carry-thru (right fuselage side).
(2) Remove vacuum line from elbow at 1K95-4 fitting. (Refer to Figure 30-1 for clarification.)
(3) Install a mercury (in. Hg) vacuum gauge in the line. Gauge must be readable to .2 in. Hg in the 3.0 to 4.0 in. Hg range.
(4) Remove pressure line from manifold aft of main spar carry-thru and install a pounds per square inch (psi) pressure gauge in line. Gauge must be readable to .2 psi in the 25 psi range.

– CAUTION –

During all engine operations, exercise caution to avoid harm or damage to personnel and equipment by propeller and propeller blast.

(5) Start engine and attain 2400 RPM.
(6) Check vacuum gauge to ensure that an indication of 3.5 to 4.0 in. Hg has been attained. Adjust regulator if required.
(7) Decrease power and attain an engine speed of 1500 RPM.
(8) Cycle deicer boot system. Ensure that control panel indicator light illuminates for three distinct periods of approximately 6 seconds each and coinciding with inflation of boots.
(9) Bring engine speed up to 2400 RPM and cycle deicer boot system. Check for an indication of 18 to 22 psi (maximum) on psi pressure gauge while cycling. Recycle deicer boot system as required to obtain and check this 18 to 22 psi pressure setting.
(10) Check visually that all boots inflate fully. Boot cycle time should be 6 /- 2 seconds. Cycle sequence is as follows:
  (a) Inboard boots -6 seconds.
  (b) Outboard boots -6 seconds.
  (c) Tailboots -6 seconds.

– NOTE–

The panel indicator light may illuminate during entire cycling period.

(11) Shutdown engine and place engine magneto and aircraft master switches in off position.

INTENTIONALLY LEFT BLANK

INTENTIONALLY LEFT BLANK

PITOT AND STATIC (Refer to Figure 3)

A heated pitot and heated stall warning system are available. It is significant to note that although they are separate systems in themselves, they are installed as an individual system controlled by a single switch on the pilot's side of the instrument panel. If both systems are not installed, the pitot system, however, can be installed by itself using the same spot for the switch as previously mentioned.

These systems are quite simple in that they contain a heated pitot head, and heated lift detectors. The units for these installations are installed on the left wing. Refer to Chapters 27 and 34 for removal and installation procedures. Refer to Chapter 91 for wiring diagrams (schematics).

THIS SPACE INTENTIONALLY LEFT BLANK

PITOT AND STATIC (Cont.)

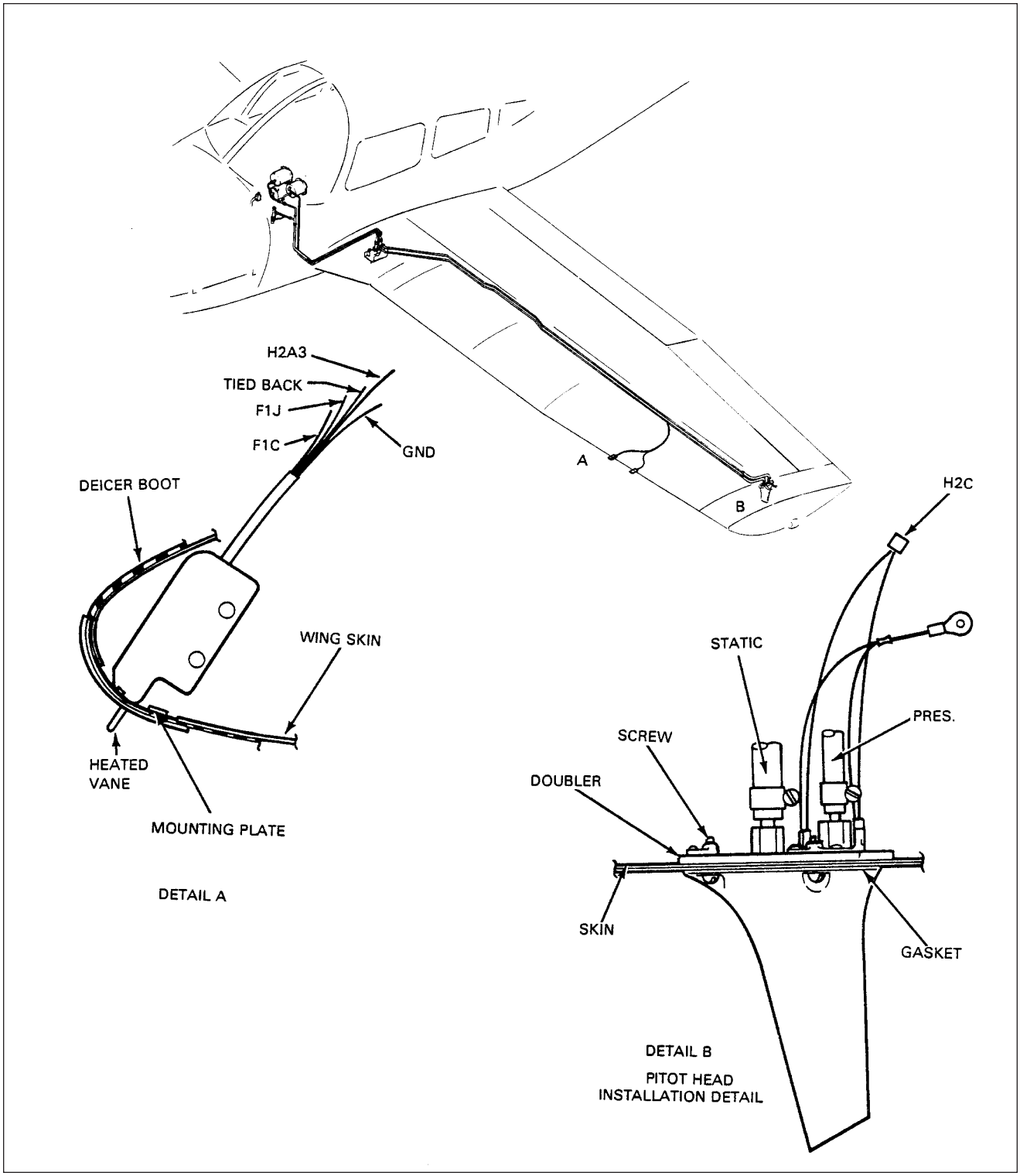

Heated Pitot and Stall Warning System Installation
Figure 4

WINDOWS AND WINDSHIELD

A HEATED WINDSHIELD PANEL (Refer to Figure 5)

The heated windshield panel is a rectangular glass panel containing electrically heated wires imbedded in the glass which is mounted in a metal frame. The assembly is mounted on the exterior side of the pilot's windshield and is hinged at its base to facilitate windshield cleaning. The heated panel is operated by a circuit breaker type switch located in the deice control panel above the throttle quadrant.

B REMOVAL AND INSTALLATION OF HEATED PANEL

(1) Disconnect electrical connector located next to heated panel on exterior side of windshield, by removing two screws and pulling plug out of receptacle.
(2) Remove two screws which attach panel assembly to windshield collar and remove panel from airplane.
(3) If airplane is to be flown with heated panel removed, rotate receptacle plate 180 and replace it to cover holes in fuselage skin, also replace windshield collar screws.
(4) Installation of heated windshield panel is accomplished in reverse order of removal.

THIS SPACE INTENTIONALLY LEFT BLANK

WINDOWS AND WINDSHIELD (Cont.)

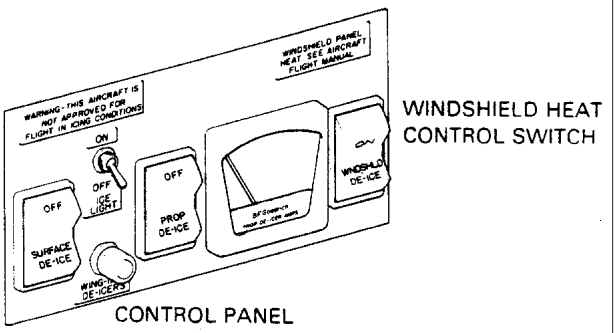

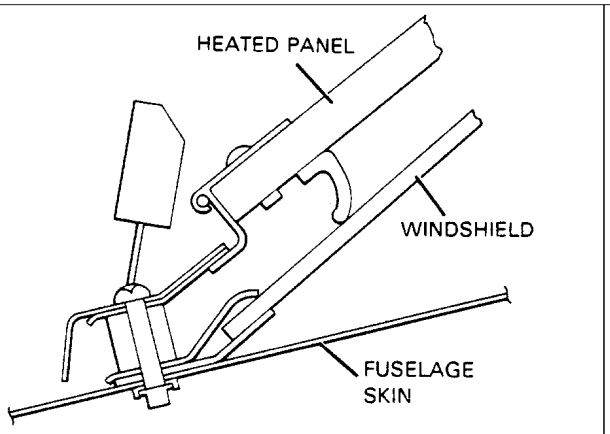

SKETCH A

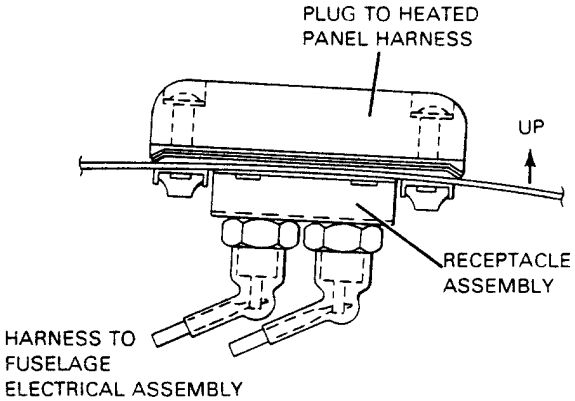

SKETCH B

PROPELLER DEICING SYTEM

A. Description

Deicers contain special heater wires protected by fabric plies and by oil and abrasion-resistant rubber. The side of deicer cemented to propeller has a dull finish whereas air side finish is glossy. Each deicer has a separate lead for inboard and outboard heater and a third lead which is a common ground. These leads are so marked. An unmarked ground can be identified by using an ohmmeter across three possible pairs of leads. One pair will show twice the resistance of the other pairs. The latter are the hot leads and the lead excluded from the pair that shows twice the resistance of the other pairs is the ground lead. All deicers used on this airplane must be of the new design, which includes a grey plastic patch where deicer and strap join.

To transfer electrical power to rotating deicers, a brush block assembly is mounted to engine or similar stationary member and has brushes which are spring loaded to press against revolving slip rings. The slip ring assembly is provided as a slip ring gear assembly which replaces original starter ring gear of engine.

The timer is a sealed unit. If found inoperative, it must be replaced as an assembly no field repairs are authorized.

The ammeter is designed for each particular system and it is therefore important that correct replacement part number be used if replacement should be required. In event of low aircraft battery voltage (very possible in ground checks), ammeter readings will be lower than at full voltage. Provided ammeter needle reads in shaded range on scale, (full aircraft voltage) current flow is considered as normal.

B. Deicer System Operational Check

(1) Lock brakes and operate engine at near take-off power.
(2) Turn deicer system switch ON and observe deicer ammeter for at least two minutes.
(3) Ammeter needle must flicker approximately every 30 seconds as step switch of timer operates.
(4) With engines stopped, turn deicer switch ON and feel deicers on propellers for proper sequence of heater operation.
(5) Temperature rise should be noticeable and each heater should warm for about 30 seconds.
(6) Local hots spots indicate surface damage requiring replacement of deicer.

C. Troubleshooting

Troubles along with their probable causes and suggested remedies are listed in Chart 4.

PROPELLER DEICING SYTEM (Cont.)

C. Troubleshooting (Cont.)

Chart 4.
Troubleshooting Propeller Deicer System (Sheet 1 of 4)

Trouble	Cause	Remedy
Ammeter shows zero current. (Both phases of the cycle.)	Tripped circuit breaker switch.	Locate and correct short before setting circuit breaker.
	No power from airplane.	If no voltage into switch, locate and correct open.
	Circuit breaker switch faulty.	If no voltage at switch output with voltage at switch input, replace the switch . If voltage is satisfactory at switch output, go to next step.
	Ammeter faulty. (If some or all deicers heat with ammeter at zero, replace the ammeter.)	Test for voltage up to and out of ammeter. If low or zero output and input satisfactory, replace ammeter. If no voltage to ammeter, locate and fix open between switch and ammeter.
	Open ammeter to timer.	Disconnect harness at timer and check voltage at pin B (of harness) to ground. If none, locate and correct open.
Ammeter shows normal current part of cycle, zero current rest of cycle.	Open in wiring between timer and brush block assembly.	Use heat test to find deicers not heating and test for voltage on that contact of wire harness plug. (At brush block assembly.) If zero over 2 minutes, locate and fix open in wiring from timer to wire harness plug.
	Open between brush block assembly and deicer lead straps.	If there is voltage to brush block wire harness plug, try voltage at junction of deicer lead and slip ring lead. If no voltage, find and correct open in wiring within brush block or no contact of brush to slip ring.

PROPELLER DEICING SYTEM (Cont.)

C. Troubleshooting (Cont.)

Chart 4.
Troubleshooting Propeller Deicer System (Sheet 2 of 4)

Trouble	Cause	Remedy
Ammeter shows normal current part of cycle, zero current rest of cycle. (Cont.)	No ground circuit, timer faulty.	If voltage is found at deicer leads, locate and fix open from deicer to ground. Check prop deicer time.
Ammeter shows normal current part of cycle, low current rest of cycle.	Inner and outer deicers heating same phase.	Locate and repair incorrect connections.
	Open in deicer or slip ring leads.	Disconnect deicer straps to check heater resistance as in Electrical Check. If satisfactory, locate and fix open in slip ring leads.
	High resistance in circuit with low current.	If not in contact of brush to slip ring (including ground brush), trace wiring to deicer and to timer to fix partially broken wire, loose or corroded connection.
Ammeter shows low current over entire cycle.	Aircraft voltage low.	Check voltage into switch.
	Ammeter faulty.	Test for voltage up to and out of ammeter. If low or zero output and input satisfactory, replace ammeter. If no voltage to ammeter, locate and fix open between switch and ammeter.
	High resistance up to timer.	Check for partially broken wire, loose or corroded connection in wiring from aircraft supply to timer input.

PROPELLER DEICING SYTEM (Cont.)

C. Troubleshooting (Cont.)

Chart 4.
Troubleshooting Propeller Deicer System (Sheet 3 of 4)

Trouble	Cause	Remedy
Ammeter shows excess current over entire cycle.	Ammeter faulty.	Test for voltage up to and out of ammeter. If low or zero output and input satisfactory, replace ammeter. If no voltage to ammeter, locate and fix open between switch and ammeter.
	Ground between ammeter and timer.	Disconnect harness at timer and with ohmmeter check from pin B (of harness) to ground. If ground is indicated, locate and correct.
Ammeter shows normal current part of cycle, excess rest of cycle.	Ground between timer and brush block.	Disconnect leads at brush block and, with ohmmeter, check from power leads to ground. If ground is indicated, locate and correct.
	Ground between brush block and deicers. (Excluding ground brush circuit.)	If no short exists at brush slip ring contact check for ground from slip ring lead to propeller assembly while flexing slip ring and deicer leads. If a ground is indicated, locate and correct.
	Short between two adjacent circuits.	Check for cuts or low resistance between circuits, if any, locate and correct.
	Timer faulty.	Test timer as in Timer Test at end of chapter.
Ammeter does not “flick” approximately every 30 seconds.	Timer ground open.	Disconnect harness at timer and check with ohmmeter from pin A (of harness) to ground. If no circuit, fix open per schematic diagram.
	Timer contacts are welded (caused by short circuit in system).	Test timer as in Timer Test at end of chapter. If timer does not cycle with voltage at pin B, replace timer but be sure short causing original failure has been located and corrected.

PROPELLER DEICING SYTEM (Cont.)

C. Troubleshooting (Cont.)

Chart 4.
Troubleshooting Propeller Deicer System (Sheet 4 of 4)

Trouble	Cause	Remedy
Ammeter flicks between 30 second phase periods.	Loose connection between air craft power supply and timer input.	If trouble occurs over entire cycle, trace wiring from power source to timer input to locate and tighten loose connection.
	Loose or poor connection timer to deicers.	If trouble occurs in part of cycle, find which deicers are affected and check for rough or dirty slip rings causing brush to “skip”. If not this, trace circuits to locate and fix loose or poor connection. (If all deicers on one propeller are affected, check the ground circuit.) Flex deicer straps to check for break.
	Timer cycles erratically.	Test timer as in Timer Test at end of chapter.
Radio noise or interference with deicers on.	Brushes “arcing”.	Check brush alignment as shown in Figures 11 and 13. Look for rough or dirty slip rings. If this is the cause, clean machine or replace slip ring assembly, as required. Check slip ring alignment. (Refer to Machining of Slip Rings.)
	Loose connection.	Refer to “Ammeter flicks” between 90 second phase periods.
	Switch faulty.	Try jumper wire across switch - if radio noise disappears, replace the switch.
	Wiring located within 8 inches of radio equipment wiring.	Relocate at least 8 inches away from input wiring to radio equipment.
Rapid brush wear or frequent breakage.	Brush block out of alignment.	Check brush alignment. (Refer to Alignment of New Brushes.)
	Slip ring wobbles.	Check slip ring alignment with dial indicator as shown in Figure 10.

PROPELLER DEICING SYTEM (Cont.)

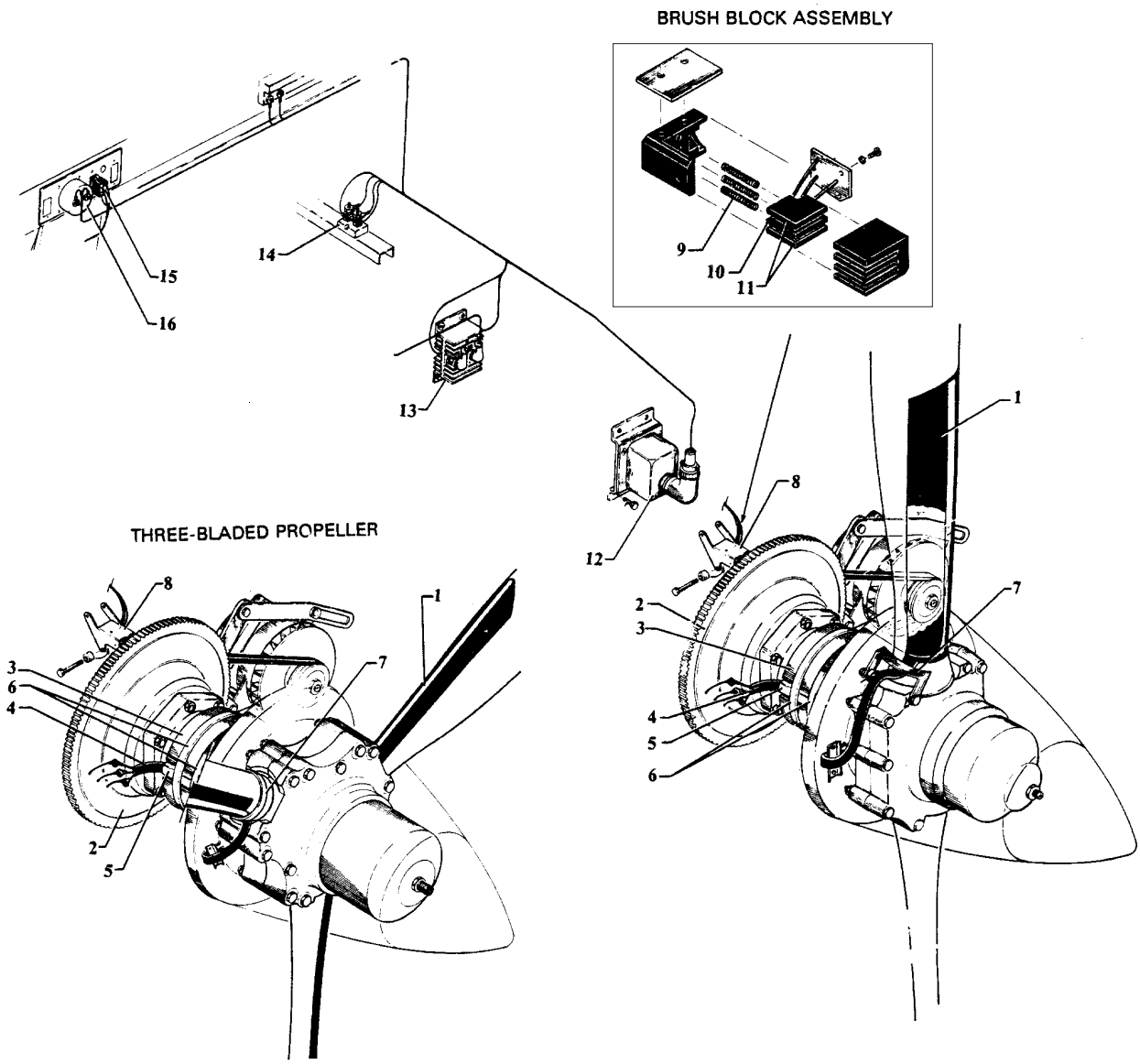

Heated Propeller Installation (Optional)
Figure 6.

PROPELLER DEICING SYTEM (Cont.)

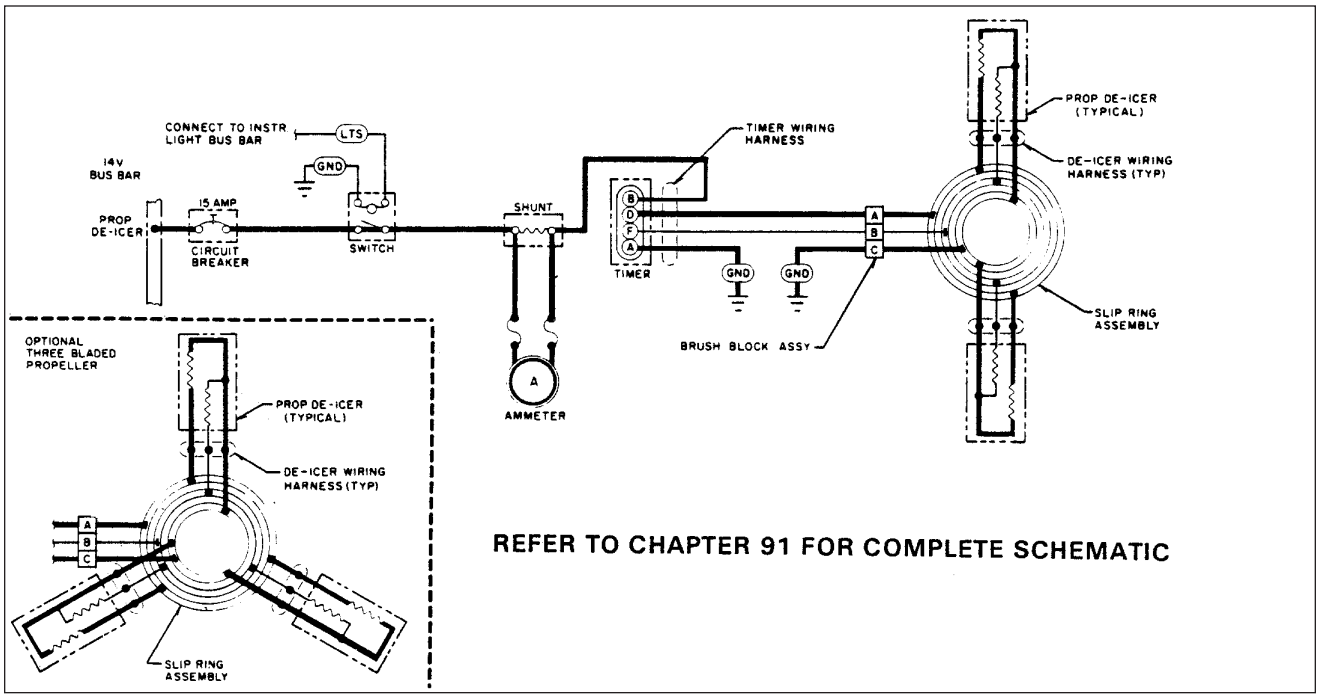

Electrical Diagram Showing Cycle Sequence
Figure 7

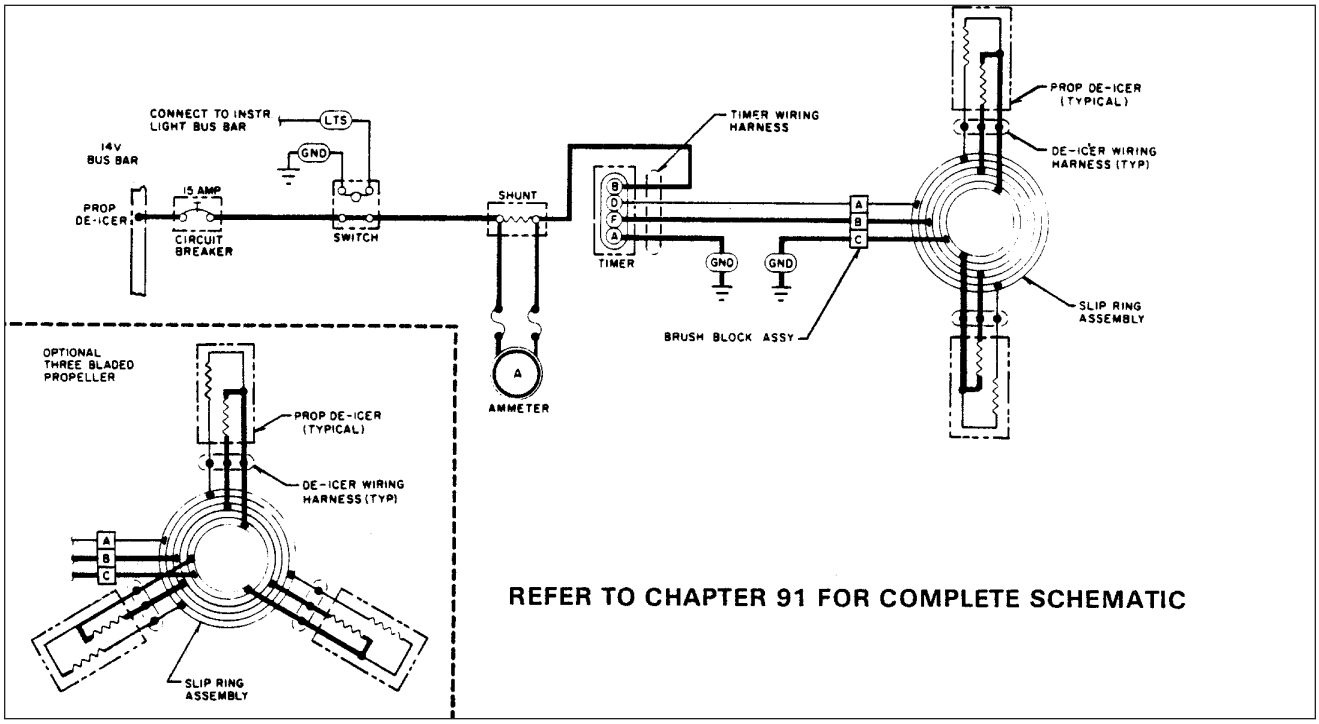

Electrical Diagram Showing Cycle Sequence
Figure 8

PROPELLER DEICING SYTEM (Cont.)

D USING THE AMMETER

Whether in flight or during ground testing, the ammeter can be used to indicate the general nature of most electrical problems. The troubleshooting chart is primarily based on this use of the ammeter and assumes that the user does understand all normal operating modes of the system as given in Principles of Operation.

– NOTE –

When troubleshooting, first use the ammeter test and heat test to determine which circuits are involved. Use circuit diagram for assistance to check voltages or continuity.

(1) If ammeter reading drops to one-half normal current for two-bladed or one-third normal current for three-bladed propeller, this indicates that one heater circuit is open or possibly improper connec- tions are allowing both inboard and outboard units to heat at the same time.
(2) Excess current reading on ammeter always indicates a power lead is shorted to ground. Thus, when trouble of this nature is found, it is vital that grounded power lead be located and corrected.
(3) A considerable number of timers that have been returned for repair proved to be fully workable when tested. Accomplish test described in Timer Test at end of this chapter before concluding that timer is defective.

E INSPECTION

(1) 50 HOUR INSPECTION

(a) Lock brakes and operate engine at near take-off power. Turn deicer system switch ON and observe deicer ammeter for at least two minutes. Ammeter needle must rest within shaded band except for a flicker, approximately every 70 seconds, as step switch of timer operates. If not, refer to appropriate entry of troubleshooting chart.
(b)With engine stopped, turn deicer switch ON and feel deicers on propellers for proper sequence of heater operation. Temperature rise should be noticeable and each heater should warm for about 30 seconds. Local hot spots indicate surface damage requiring replacement of deicer.
(c) Remove spinner dome and open access doors as required. With assistant obeserving deicer ammeter and with deicer switch ON, flex all accessible wiring - particularly in deicer lead straps, leads from slip ring assembly and fire wall electrical connectors and their wiring. Any movement of ammeter needle other than the 90-second flicker of cycling indicates a short or open that must be located and corrected.

PROPELLER DEICING SYTEM (Cont.)

E INSPECTION (Cont.)

(2) 100 HOUR INSPECTION (Cont.)

(a)Remove cowling.

(b) Conduct 50 hour inspection.

(c) Check for radio noise or radio compass interference by operating engine at near takeoff power with radio gear ON while turning deicer switch ON and OFF. If noise or interference occurs with deicer switch ON, and disappears when switch is OFF, see troubleshooting chart.

(d) Ascertain that all clamps, clips, mountings and electrical connections are tight. Check for loose, broken or missing safety wire.

(e) Deicers: Closely check deicers for wrinkled, loose or torn areas, particularly around outboard end and especially where strap passes under strap retainer. Look for abrasion or cuts, especially along leading edge and flat or thrust face. If heater wires are exposed in damaged areas or if rubber is found to be tacky, swollen or deteriorated (as from oil or solvent contact), replace damaged deicer in accordance with Installation of Deicer.

– NOTE –

Check that strap restrainers are correctly located and secure. Look for cracks or other damage. Operate propeller from full pitch to low pitch and check that deicer lead straps do not come under tension, or are pinched by propeller blade.

(f) Slip Rings: Check slip rings for gouges, roughened surface, cracks, burned or discolored areas and for deposits of oil, grease or dirt.

1 Clean greasy or contaminated slip rings with CRC2-26 solvent.

2 If uneven wear is found or if wobble is noticed, set up dial indicator as shown in figure 30-9 to check alignment of slip rings to propeller shaft.

(g) Brush Block - Brushes: Examine mounting brackets and housing for cracks, deformation or other physical damage.

1 Test that each brush rides fully on its slip ring over 360. Figure 10 shows wear pattern if this condition is not corrected. If alignment is off, shim where brush block bracket attaches to engine back bone or pivot at support arm which is attached to generator idler pulley bracket.

2 Check for proper clearance of brush block to slip rings as shown in Figure 12. If not correct, loosen mounting screws and move in elongated holes to correct block position before tightening securely.

3 Visually check brush block for approximately 2 angle of attack. (Refer to Figure 12.) If not, loosen mounting screws and twist block, but be sure to hold clearance limits shown when tightening.

(h) System Wiring: With deicer system operating, have assistant observe ammeter while visually inspecting and physically flexing wiring from brush blocks through firewall, to timer, to ammeter, to switch and to aircraft power supply. The ammeter will flicker as the timer switches approxi- mately every 90 seconds in cycle. Jumps or flickers at other times indicates loose or broken wiring in area under examination at that moment. In such case, check continuity through affected harness, while flexing and prodding each wire in area that gave inital indication of trouble. Use wiring diagram in Chapter 91 to trace circuitry.

PROPELLER DEICING SYTEM (Cont.)

E INSPECTION (Cont.)

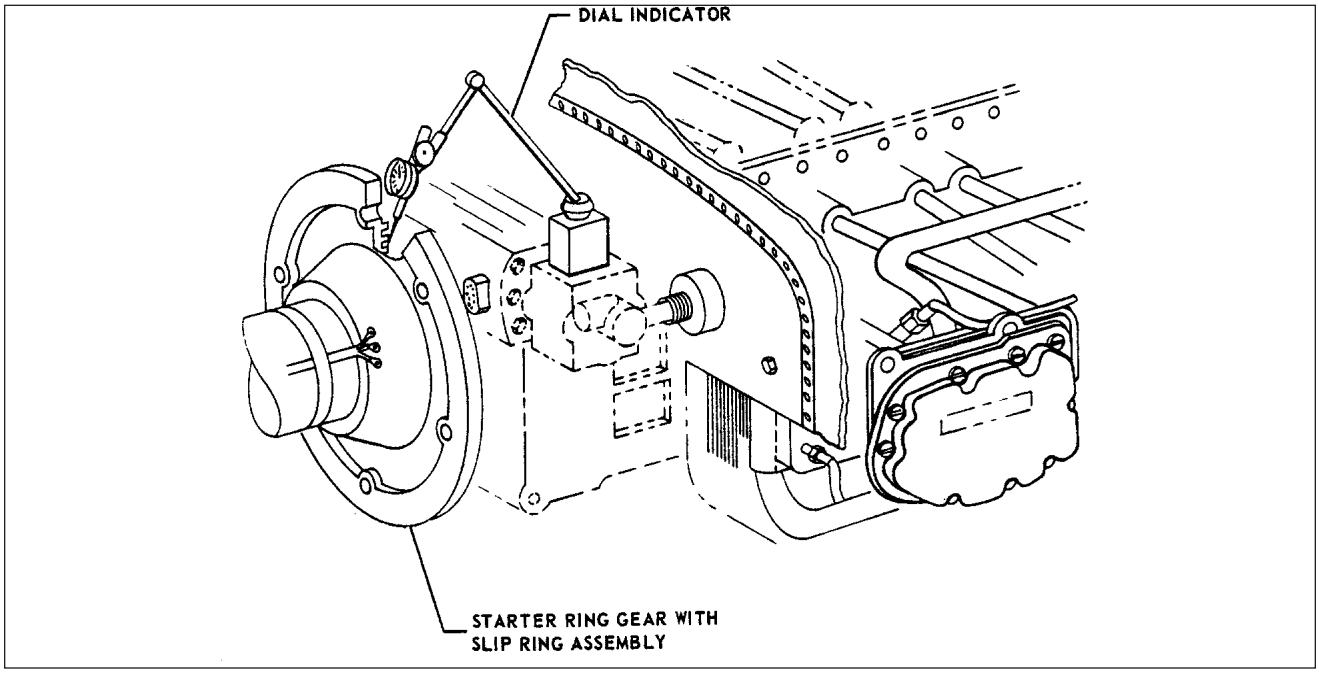

Typical Use of Dial Indicator
Figure 9

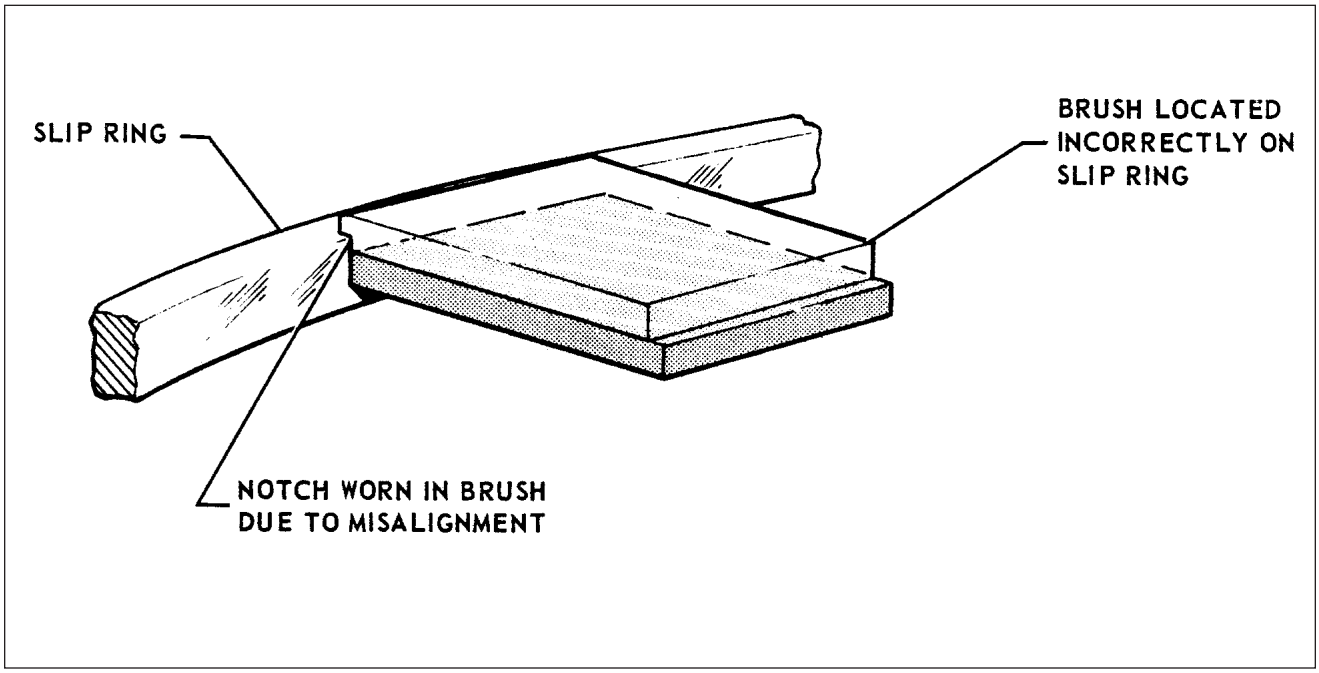

Centering of Brushes on Slip Rings
Figure 10

PROPELLER DEICING SYTEM (Cont.)

F. REPAIR PROCEDURE FOR INDIVIDUAL COMPONENTS

(1) BRUSH REPLACEMENT

Brushes are replaceable when B barrel rests entirely within block; for example, when aft end of .187 inch barrel is flush with aft surface of block. Brushes must be replaced when aft end of B barrel is .093 inch inside recess. (Refer to Detail A, Figure 30-11.) If .312 inch barrels are used, refer to Detail B, Figure 11.

– CAUTION –

Side loads on brushes should be avoided to prevent brush damage.

(a) Remove screws which hold brush block assembly to mounting brackets and remove brush block assembly.
(b) Remove two assembly screws which hold block together. These screws are located one on same side as connector plug and one on side directly opposite.

(2) REPAIRING BRUSH BLOCK ASSEMBLY
(a) Discard old brush retainer assembly.
(b) Assemble new brush retainer assembly to other block by slipping block from front of retainer assembly over brushes and then over springs. Replace two screws removed in Brush Replacment, Step 2. This installation can be made only in this manner since springs are of slightly larger diameter than brush slots in block and must be fed into cylindrical grooves provided.
(c) Reassemble brush block to mounting brackets utilizing hardware previously removed.

(3) ATTACHING INDIVIDUAL BRUSHES TO BRUSH RETAINER
(a) Remove brush retainer assembly per Brush Replacement, Step 2.
(b) Compress springs by pushing brushes back into brush retainer assembly and hold them there by wrapping with rubber bands.
(c) Mark connector plug with respect to its installation on brush retainer assembly block so that it may be removed and replaced in exact same position.
(d) Remove four screws which hold connector plug to block.
(e) Pull connector plug from block far enough so that leads from brushes to be replaced may be un- soldered at plug.
(f) Unsolder brush lead at connector plug and unsolder B barrel from brush rod of brush to be replaced.
(g) Now, remove and discard old brush and spring.
(h) Place new springs over rods on new brushes and insert through holes in block of brush retainer assembly. Compress spring and hold in position with rubber bands.

– NOTE –

New springs and B barrels should always be used when replacing brushes.

PROPELLER DEICING SYTEM (Cont.)

F. REPAIR PROCEDURE FOR INDIVIDUAL COMPONENTS (Cont.)

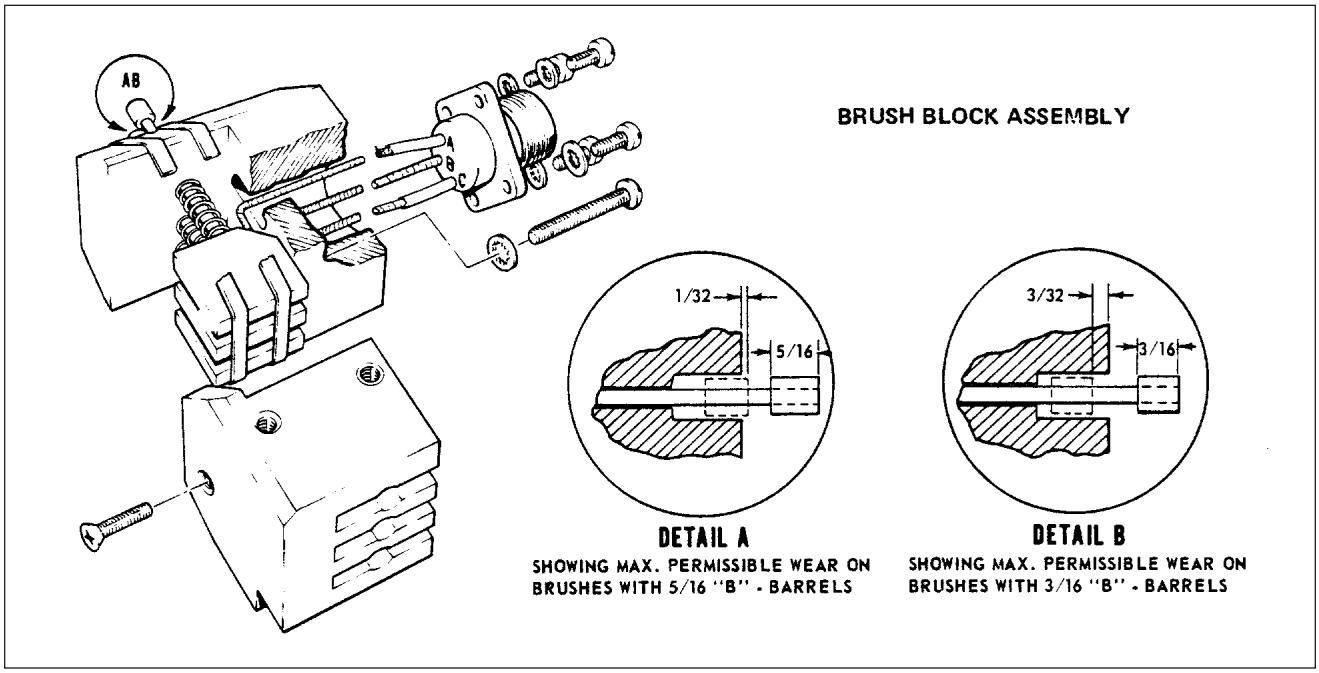

Brush Block Assembly
Figure 11

(i) Place B barrel over brush rod and soft solder. End of B barrel should be flush with aft end of rod. Barrel must be concentric with rod and no solder is permitted on exterior of barrel or rod.

– NOTE –

If concentricity is not obtained or if residual solder is allowed to flow on exterior of barrel, barrel may catch on brush block causing brush to hang-up and consequently, system will malfunction.

(j) Place tubing over brush lead. Soft solder brush leads to appropriate pin in connector plug. Wicking on leads should be held to .125 maximum.
(k) Wipe flux from leads and connector pin.
(l) Pull tubing up over connector pins to insure that no electrical shorts exist and, if necessary, bend leads away from each other.
(m) Reinstall connector plug to brush block, utilizing hardware previously removed.
(n) Carefully remove rubber bands from brushes.
(o) Assemble brush block per Repairing Brush Block Assembly, Step 2.
(p) Check for free movement of brushes by pushing brushes back into block and allowing spring pressure to return them. DO NOT SNAP. If free movement is impaired, correct restriction and recheck. In particular, check concentricity requirement in Step 9.
(q) Reinstall brush block to mounting bracket utilizing hardware removed previously.

PROPELLER DEICING SYTEM (Cont.)

F. REPAIR PROCEDURE FOR INDIVIDUAL COMPONENTS (Cont.)

(4) ALIGNMENT OF NEW BRUSHES

Anytime brush block assembly is dismounted, alignment at reinstallation must be checked as described in 100 Hour Inspection, Step 7 and Figure 12.

G. SLIP RINGS

(1) MACHINING OF SLIP RINGS

Slip rings with roughened or damaged surfaces can be machined to restore serviceability. Remove starter ring gear assembly from aircraft to mount it in a lathe, located concentrically in lathe and with not over 0.002 wobble or run-out over 360 rotation with respect to mounting surface of starter gear/slip ring assembly. Take light cut for smooth finish and cut no deeper than required to remove surface damage. Contact surfaces of three slip rings must be parallel within 0.005 inch and flat within 0.005 inch overall - deviation from flat not to exceed 0.002 inch over a 4 inch arc. If necessary, undercut insulation between slip rings to a depth of .030 inch below contact surface of slip rings. In this operation, width of slip ring must be reduced more than .005 inch. Contact surface of slip rings must have a finish of 29-35 micro inches. De-burr slip ring edges and reinstall on airplane.

– NOTE –

If in machining, solder or braze connection on underside of slip ring is exposed replacement of ring gear assembly will be necessary.

(2) REPLACEMENT OF SLIP RINGS

Starter ring assemblies that are open or shorted electrically, cracked or damaged structurally, or which have damaged surfaces beyond scope of minor repair to clean up, should be replaced with a new starter ring assembly.

THIS SPACE INTENTIONALLY LEFT BLANK

PROPELLER DEICING SYTEM (Cont.)

G. SLIP RINGS (Cont.)

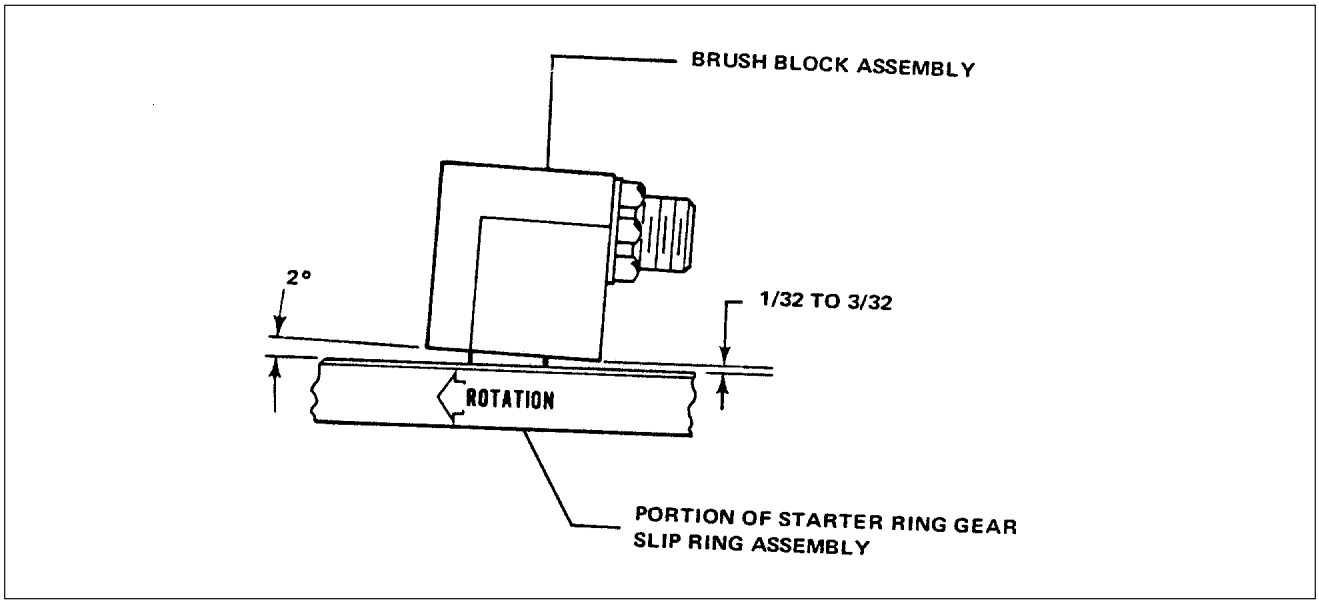

Angle of Contact Brushes to Slip Rings
Figure 12

H. DEICER BLADES

(1) RESISTANCE CHECK OF DEICER BLADE

To determine incorrect resistance, short or open at brush-to-slip ring contact; disconnect harness at timer and use low-range ohmmeter to read resistance from each deicer circuit lead (pins D and F of harness plug) to ground. It should read 2.30 to 2.65 for two-bladed propellers or 1.55 to 1.78 for three-bladed propellers. If this reading is not obtained, disconnect the deicer lead straps to measure heater resistance individually. Individual heater should be 4.58 to 5.26. If first check is off limits but second check is satisfactory, trouble is probably in brush-to-slip ring area; if second check is off limits, deicer is damaged and must be replaced.

(2) REPLACEMENT

If tests show blade deicer to have an open circuit, to be wrong resistance or to be visibly damaged beyond repair as outlined in 100 Hour Inspection of this section, replace deicer.

PROPELLER DEICING SYTEM (Cont.)

H. DEICER BLADES (Cont.)

(3) REPAIR OF DEICER LEAD STRAP (Refer to figure 13)
Use B.F. Goodrich Field Repair Kit No. 77-802 which contains rubber patch material sufficient for several repair jobs. Cements and solvents specified in these directions are not included in the kit. (Abbreviation MEK in further steps stands for Methylethylketone.) Following steps apply wherever cementing is specified in text:

(a) Clean area to be bonded or patched with MEK or acetone to remove all grease and dirt. It is vital that surface be clean for good cementing job. After last wipe with cleaner, quickly wipe surface with clean dry lint-free cloth to remove solvent film.

(b) Apply one even coat of 1300L cement (Minnesota Mining and Mfg. Co.) to area to be bonded or patched and allow to dry (approximately one hour above 40F). Apply second even coat of 1300L cement and allow to dry.

(c) Cut the patch (.020 thick rubber to about 1/4 inch large on all sides of damaged area). Protective paper is on side to be cemented. Apply masking tape on open side to prevent patch from curling as cement dries; then strip off protective paper and apply 1300L cement in smooth, even coat. Allow to air dry. After one hour, apply second coat and allow to air dry.

(d) With cemented surfaces either dry or with just a trace of tackiness, apply light coat of MEK or Toluol over these surfaces to re-tackify and quickly complete the cementing job as directed. Allow one hour to air dry before peeling off masking tape or mylar coating on air side. Rub edges and center of patch to see that it is holding before releasing for flight. (Approximately 24 hours.)

– NOTE –

Do not touch cemented surface with dirty or oily fingers.

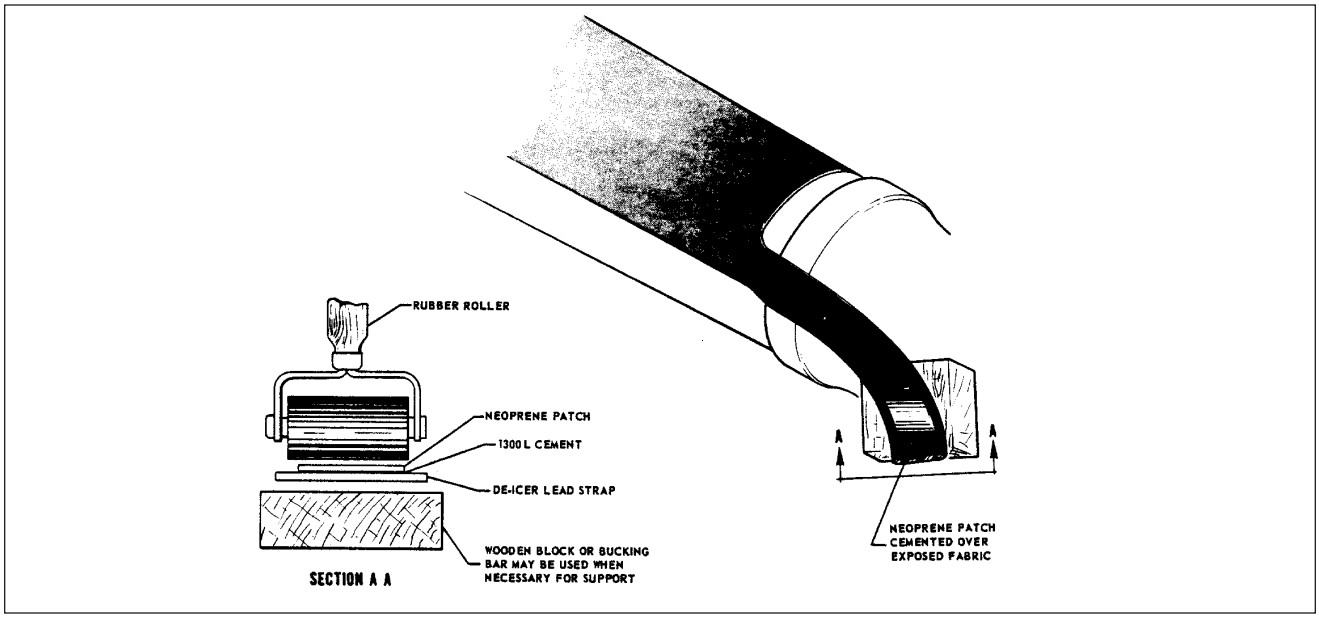

Repair of Lead Strap
Figure 13

PROPELLER DEICING SYTEM (Cont.)

H. DEICER BLADES (Cont.)

(4) REMOVAL OF DEICER

(a) Disconnect terminals of propeller deicer from studs on spinner bulkhead.

(b) Use MEK or Toluol to soften adhesion line between deicer and propeller blade.

(c) Starting at one corner of deicer, loosen enough of deicer to grasp in jaws of a vise grip pliers or similar tool.

(d) Apply a steady pull on deicer to pull it off propeller surface. Continue using MEK or Toluol to soften adhesion lines. Unless deicer being removed is damaged and is to be scrapped, cushion jaws of any pulling tool used to prevent damage to deicer surface. Remove very slowly and carefully. If deicer has failed and is to be returned under request for warranty, extreme care should be exercised so that no additional damage is incurred to deicer during and after removal.

(e) Remove residual cement from blade. Use Turco 3 or equivalent to help remove dried cements.

(5) BLADE PREPARATION

(a) Mark and cut from masking tape a pattern size of propeller deicer including first inch of lead strap. (Refer to figure 14.)

(b) Place a mark at hub end of blade in line with blade leading edge. Location for this mark can be determined by sighting along leading edge. Starting at hub (see NOTE below), center pattern on this mark and stick pattern to leading edge. Mark position of deicr lead strap where it crosses hub.

– NOTE –

All deicers on a single propeller must be located same distance from hub for rotational balance.

(c) Remove pattern and remove any paint in marked off area. Clean down to bare metal. Next, clean area thoroughly with MEK or acetone. For final cleaning, wipe solvent off quickly with a clean, dry lint- free cloth to avoid leaving a film.

– CAUTION –

Cleanliness of metal and rubber parts cannot be too highly stressed. Only perfectly clean surfaces will assure maximum adhesion.

(d) Using a pencil or pen, mark a centerline at hub of propeller blade and on tape at outboard edge of masked area.

(6) CEMENT APPLICATION

(a) Using a silver pencil, mark a centerline on glossy side of deicer.

(2) Moisten a clean cloth with MEK or acetone and clean unglazed surface of deicer, changing cloth frequently to avoid contamination of clean area.

(c) Thoroughly mix 1300L cement. Apply one even brush coat of cement to unglazed back surface of deicer. Cement one inch of deicer lead strap. Allow to air dry for a minimum of one hour at 40°F or above, when relative humidity is less than 75%. If humidity is 75% to 90%, allow two hours drying time. Do not apply cement if relative humidity is higher than 90%. After allowing proper amount of drying time, apply a second even brush coat of 1300L cement.

PROPELLER DEICING SYTEM (Cont.)

H. DEICER BLADES (Cont.)

– NOTE –

If curling of deicer edges is a problem, apply masking tape to edges of glazed side before applying cement to unglazed side. Remove tape before starting to install deicer.

(d) Apply an even brush coat of 1300L cement on cleaned surface of propeller blade, immediately after second coat of cement has been applied to deicer. This timing is important for cement on both surfaces to reach tack stage at same time.

(7) INSTALLATION OF DEICER AND REQUIRED MATERIALS

It is imperative that following instructions be followed exactly to insure maximum adhesion to proper blades:

(a) When cement coats are tacky dry on both propeller surface and deicer surface, proceed as follows:

Required Materials for Repair of Propeller Deicer

The materials and tools listed below are commercially available and are not supplied by B.F. Goodrich in kit form:

Item	Amount
Cement 1300L (Minnesota Mining & Mfg. Co.)	1 pt. per six blades
Sealer A56B (B.F. Goodrich)	1/2 pt. per six blades
Cleaning solvent MEK (Methylethylketone) or Acetone	
Cleaning Cloth - any clean, lint-free cloth	
1 in. Paint Brush	
2 in. Rubber Hand Roller	
1/4 in. Metal Hand Stitcher	
Scissors	
Turco* 3 (Turco Products Co.)	1 pt. per six blades
Masking Tape	

– NOTE –

MEK can be used instead of Toluol to tackify cement; however, tests show that MEK causes rapid drying and provides only 10 seconds working time for deicer application compared with 40 seconds for toluol.

PROPELLER DEICING SYTEM (Cont.)

H. DEICER BLADES (Cont.)

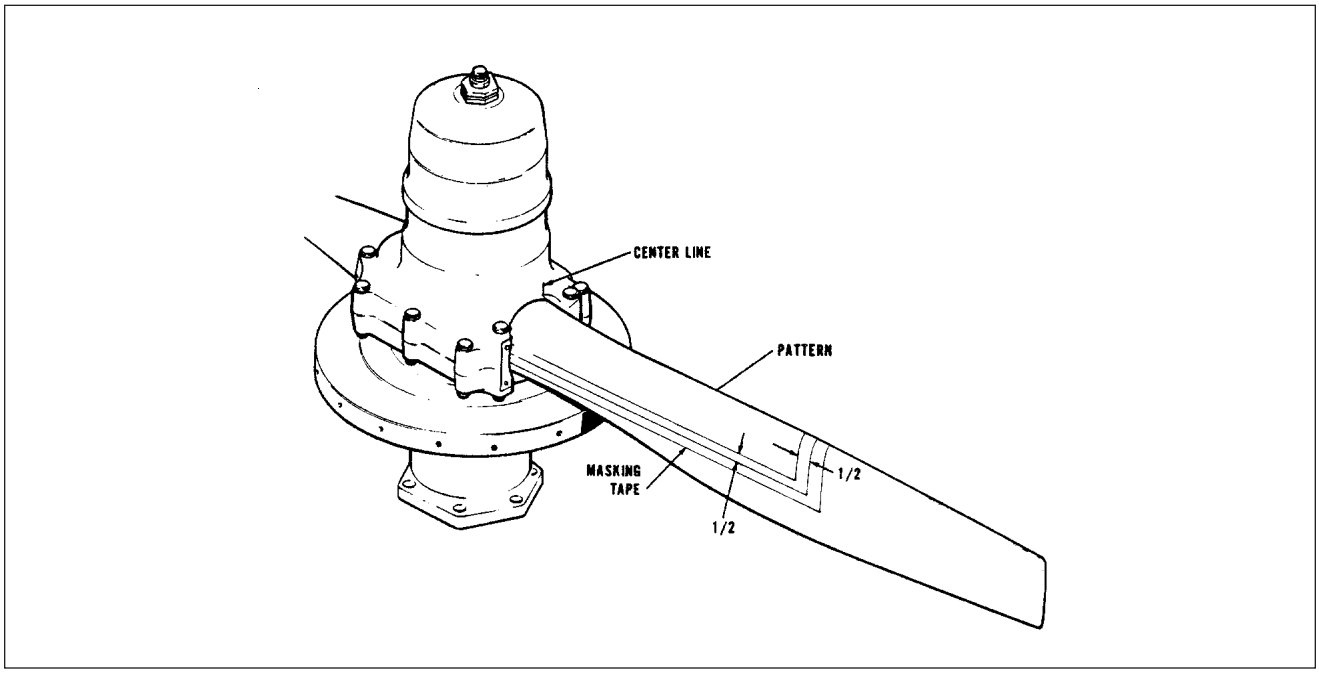

Installation of Deicer Boot
Figure 14

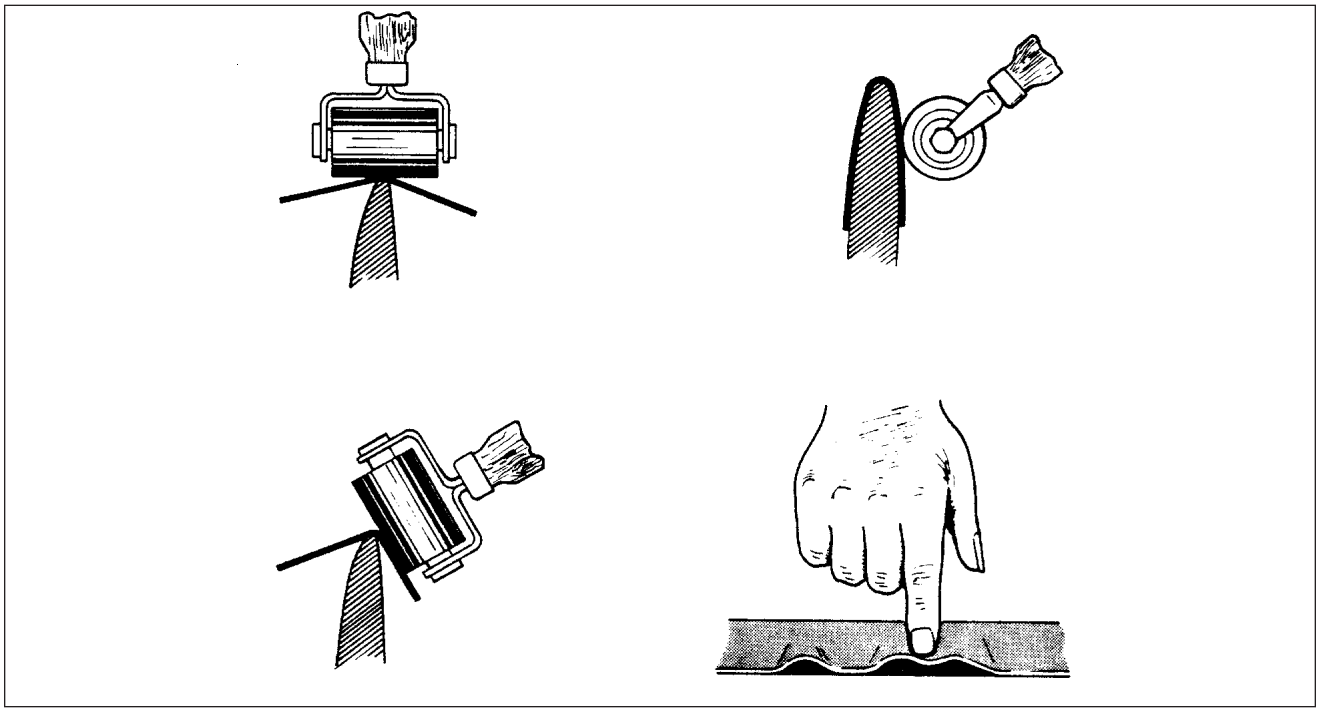

Wrinkled Deicers
Figure 15

PROPELLER DEICING SYTEM (Cont.)

H. DEICER BLADES (Cont.)

(7) INSTALLATION OF DEICER AND REQUIRED MATERIALS

1 Position deicer on propeller leading edge, using centerlines starting from hub. (Refer to Figure 14.) Make sure that strap will fall in position previously marked. Working towards tip, tack deicer centerline to leading edge of propeller blade. Use tackifying solvent as necessary. If deicer is allowed to get off course, pull up with a quick motion and remove deicer. If cement is removed from either surface, completely remove deicers and reapply cement. Roll firmly along centerline with a rubber roller, as shown in Figure 14.

2 Roll tapered edges, especially inboard edge, of deicer with a narrow steel stitcher roller.

– CAUTION –

To avoid damage to resistance wires, do not use metal stitcher on body of deicer.

3 Apply one even brush coat of sealer around edges of installed deicer.

4 Remove masking tape from blade immediately after applying sealer.

5 Allow 12 hours cement curing time before turning up propeller. Allow 24 hours curing time before operating deicers. Handle propeller carefully to prevent damage to deicers.

(b) Propeller deicers, one for each propeller blade, are supplied in B.F. Goodrich propeller deicing system kits. Replacement deicers may be ordered from B.F. Goodrich Company.

(8) PREPARATION AND APPLICATION OF SEALER

Deicers loosened due to destruction of adhesive bond by lubricants do not respond well to recementing. Therefore, removal, cleaning, and reinstallation of deicers are recommended. Refer to Removal of Deicer and Installation of Deicer.

(a) Clean an area .500 inch wide around circumference of deicer down to bare metal. Use MEK or acetone and clean thoroughly.

(b) Clean outer .500 inch of all deicer edges and back under deicer about .250 on all sides, part loosened areas with MEK or acetone. For final cleaning, quickly wipe off solvent with a clean, dry, lint- free cloth to avoid leaving a film.

(c) Recement loosened areas of deicers in accordance with Cement Application.

(d) Mix filler, sealer or paint thoroughly and in proper proportions by weight, as given in the following steps:

1 82-075A/B - one part A/one part B

2 82-076-1/2 - Twelve parts - 1/one part - 2

3 EC-1031/EC-801 - Twelve parts 1031/one hundred part 801

4 C-19861/C-21871/C16176 - one part 19861/seven parts 21871/two thirds parts 16176.

(e) Locate masking tape approximately .125 inch beyond cemented area around deicer to allow application of filler directly to metal. Apply one even brush coat of 82-075A/B filler (or EC-801 filler) over .124 inch of bare metal, cemented area and about .125 of an inch of deicer. (See Figure 16.)

PROPELLER DEICING SYTEM (Cont.)

H. DEICER BLADES (Cont.)

(8) PREPARATION AND APPLICATION OF SEALER (Cont.)

(f) Insure that a fillet of filler completely covers area between deicer strap and blade (See figure 17.) Immediately remove masking tape and allow filler to dry for six hours.

(g) Apply new masking tape approximately .125 of an inch beyond filler to allow application of sealer directly to metal. Apply one even brush coat of 82-076-1/2 sealer (or C19861/C-16176 paint) over .125 of an inch of bare metal, filled area and .250 of an inch of deicer. (See Figure 16.)

(h) Insure that sealer completely covers area between deicer strap and blade. (See Figure 17.) Immediately remove masking tape and allow sealer to dry for 24 hours before starting engine.

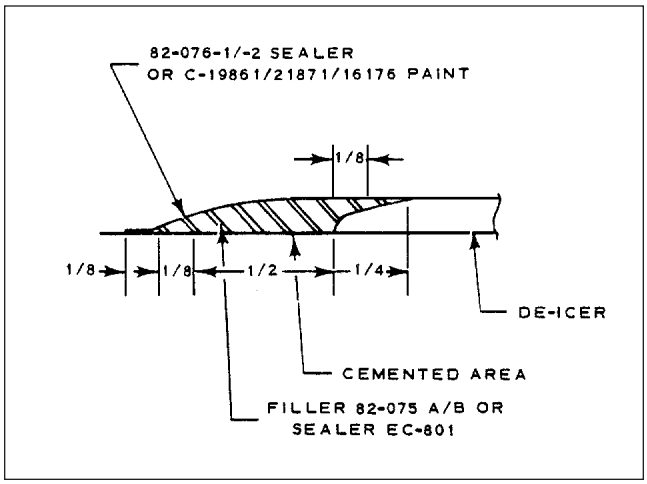

Sealer Application (Boot)
Figure 16

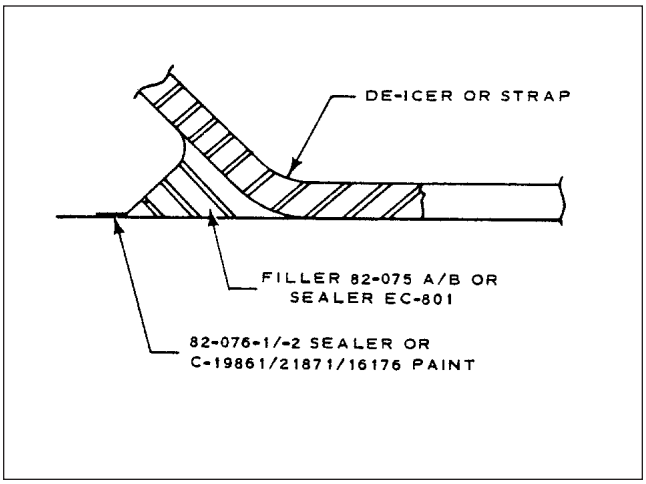

Sealer Application (Lead Strap)
Figure 17

(9) WRINKLED DEICERS (Refer to Figure 15.)

If edge of deicer is found wrinkled or loose, try recementing. Use MEK or Toluol to loosen the bond for an additional 1/4 inch beyond the loose or wrinkled area. Apply one coat of 1300L cement to the deicer and propeller bonding surfaces and allow to air dry for one hour. Then apply a second coat of 1300L cement to both the deicer and bonding surface. Allow to dry. Retackify with MEK or acetone and press with fingers to work out wrinkles or to secure loose edges. If material has stretched and will not cement flat, replace the deicer.

(10) ELECTRICAL CHECK

(a) Check electrical resistance of each of two elements within deicer. Refer to Schematic, in Chapter 91 and Resistance Check of Deicer Blade. Refer to Step 3 below.

(b) Check for intermittent open circuits by tensioning deicer strap slightly while measuring resistance. Also, press lightly on deicer surface in area adjacent to strap retainer. Resistance must not vary.

PROPELLER DEICING SYTEM (Cont.)

H. DEICER BLADES (Cont.)

(10) ELECTRICAL CHECK

(c) Identification of circuits within element may be confirmed by referring to resistance values (below) and schematic diagram in Chapter 91. Proper identification is necessary in order t make system cycle properly and to obtain correct amperage values during system operation. Minimum and maximum ohms between common ground and either of the other terminals iso 4.58 to 5.26.

– NOTE –

These resistances apply only to deicers that are not connected to terminal studs.

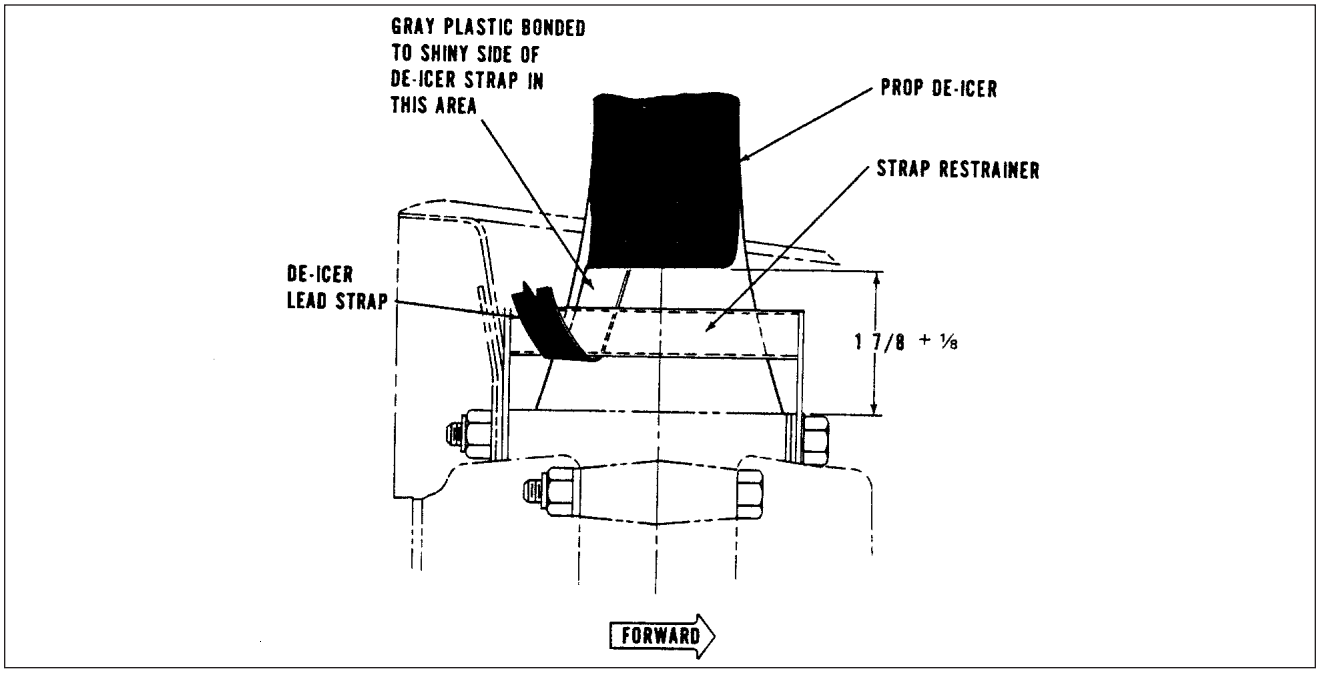

Propeller Blade in Low Pitch
Figure 18

(11) INSTALLATION OF DEICER STRAPS AND WIRE HARNESS

(a) Deicer lead strap is fastened to bulkhead in same positions from which they were removed.

(b) Deicer strap is to be attached to studs on spinner bulkhead.

– CAUTION –

Never use Type B star washer (teeth on outer diameter) adjacent to tongue of deicer terminals.

PROPELLER DEICING SYTEM (Cont.)

H. DEICER BLADES (Cont.)

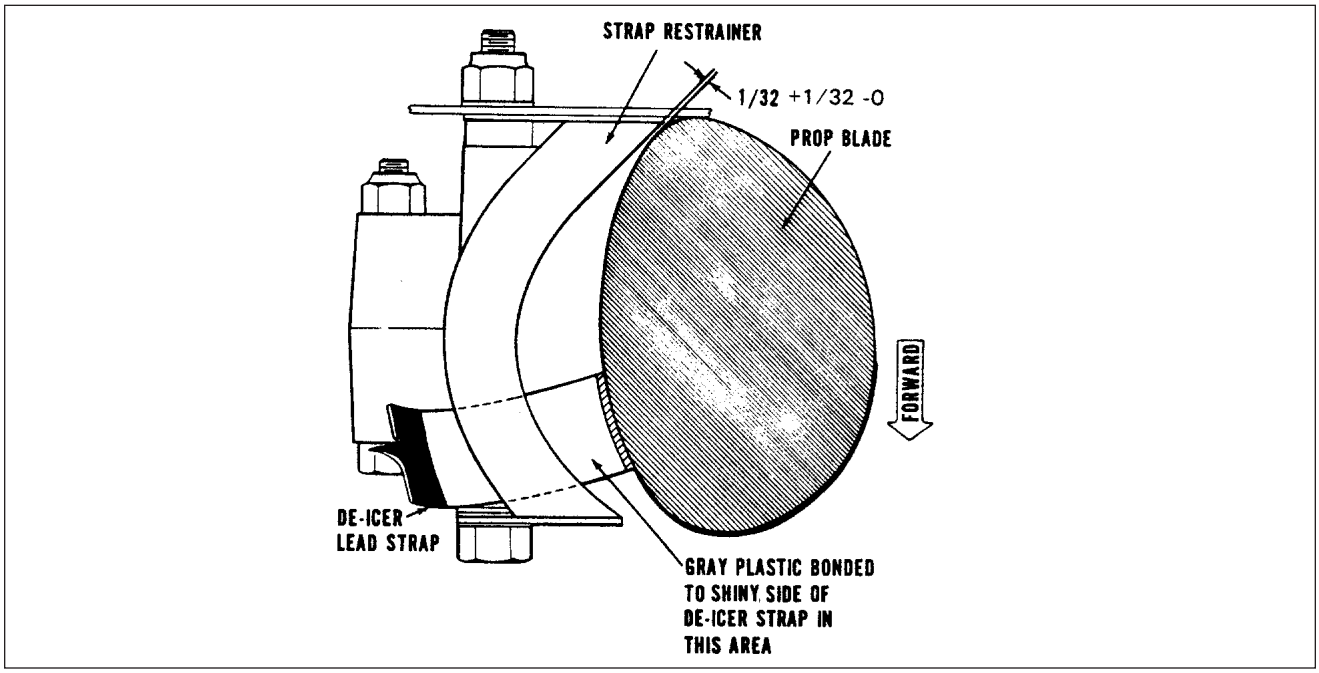

Propeller Blade in Feather Position
Figure 19

(11) INSTALLATION OF DEICER STRAPS AND WIRE HARNESS (Cont.)

(c) Make certain that there is no slack in deicer lead strap between terminals and clip. This is important because it assures enough slack between clip and strap restrainer to allow for proper feathering A test should be conducted on each propeller deicing system to insure that deicer lead straps are installed in such manner that propeller can be moved from full low pitch through feathering position without placing straps in tension.

– NOTE –

Deicers should have a piece of grayplastic bonded to air side (shiny side) of deicer strap as shown in Figure 18. Strap restrainers should be positioned as shown in Figure 19 when propeller blades are in full feather position.

(d) If damage occurs to slip ring wire harness, rubber spacers or hose clamps, replace damaged parts.

PROPELLER DEICING SYTEM (Cont.)

H. DEICER BLADES (Cont.)

(12) BALANCING

To assure balance of propeller assembly, original balancing weights or their equivalents must be reinstalled. Weights must be left in their original position on propeller hub. restrainer and weights should not interfere with any part of propeller assembly under any condition. If for any reason balance weights were removed, reinstall safety wire on screws.

(13) FINAL ELECTRIC CHECK

(a) Check electrical resistance between deicer terminals or between slip rings. Reading should be:

Resistance Check	Max.	Max.
1 Blade each Element	5.26	4.58
2 Blades in Paralle	l2.65	2.30
3 Blades in Paralle	l1.78	1.55

(b) If propeller is installed on an airplane, deicer circuits on propeller must be electrically isolated from rest of airplane wiring when making above resistance check. Isolating can be done by any one of the following methods:
1 Remove brush block.
2 Retract brushes and slip a sheet of paper between brushes and slip rings. If this method is used, make certain that brushes are not misaligned or damaged by insertion of paper shim.
3 Disconnect timer and engine wire harness at any convenient place.

(c) Reconnect any circuits that may have been disconnected, or remove paper shims that might have been used for making final electrical check.

(14) OTHER COMPONENTS

Do not attempt internal repairs of timer, ammeter, or switch. If inoperative, these components must be replaced with one of correct part number. For any other other repair or maintenance problems not covered in this manual, inquire at Aerospace and Defense Products Divison of B.F. Goodrich Company, Akron, Ohio 44318.

(15) TIMER TEST (Prop Deice)

– CAUTION –

Before removing a timer as a defective component perform this test. Field experience indicates that too often timer is considered at fault when true trouble lies elsewhere.

(a) Disconnect wire harness at timer, isolate pin B wire from ground, (A to timer) and turn on power at deicer switch. Then check for 14 volts D.C. at pin B of wiring harness with a voltmeter. If system voltage is not present, refer to Chapter 91 for electrical schematic and troubleshoot wiring. If system voltage is present at pin B, check for continuity at pin A of harness connector to ground with an ohm- meter. If continuity is not present repair ground wire. A faulty ground wire will cause timer step switch not to cycle.

PROPELLER DEICING SYTEM (Cont.)

H. DEICER BLADES (Cont.)

(15) TIMER TEST (Prop Deice)

(b) When voltage and system ground have been verified for proper operation, secure power by turning deicer switch off prior to performing a functional test on timer.

(c) Fabricate two 14 gauge jumper wires, and connect one from pin B of wiring harness to contact B of timer, connect second jumper wire from pin A of wiring harness to contact A of timer. With jumper wires in place, turn on power at deicer switch. Using a voltmeter, check for voltage at timer contacts D and F. System voltage will be volts D.C. The timer will cycle with 14 volts D.C. between pins D and F approximately every 90 seconds and verify zero voltage on deenergized contact.

(d) If timer meets these requirements, it is not cause of trouble. If it failed to perform as indicated, replace propeller deicer timer.

– END –

INTENTIONALLY LEFT BLANK

INTENTIONALLY LEFT BLANK

DETECTION

A. ICE VIEWING LIGHT

This light is used in conjunction with pneumatic deice system, and will aid in detecting ice on leading edge of left wing during night flying. Light is located on left of fuselage just forward of left wing. Ice viewing light is protected by a 5 amp circuit breaker and controlled by a switch on deice control panel.

B. REMOVAL OF ICE VIEWING LIGHT

(1) Remove electrical power by disconnecting battery or pull out push/pull circuit breaker.
(2)Remove access panel screws and access panel being careful of light assembly wiring.
(3) Remove screws to light assembly wiring.
(4) Remove screws securing light assembly to tube assembly.
(5) Slide light assembly out of tube assembly to replace lamp or light assembly.

C. INSTALLATION OF ICE VIEWING LIGHT

(1) Slide light assembly into tube assembly and secure with appropriate screws.
(2) Reconnect wiring to light assembly contacts and secure access panel with appropriate screws.
(3) Connect battery, reset circuit breaker and make an operational check of ice viewing light.

– END –

GRIDS 2I24 THROUGH 2L24
INTENTIONALLY LEFT BLANK



SARATOGA SP
SARATOGA II HP

MAINTENANCE MANUAL

PA-32R-301 SARATOGA SP
PA-32R-301 SARATOGA II HP
PA-32R-301T SARATOGA SP

Card 3 of 4

THIS HANDBOOK INCLUDES THE MAINTENANCE INFORMATION REQUIRED TO BE AVAILABLE BY FAR PART 23.

PART NUMBER 761 719

Published by
Technical Publications

Piper Aircraft Corporation
2926 Piper Drive
Vero Beach, Florida 32960
U.S.A.

Copyright 1990 Piper Aircraft Corporation

All rights reserved. No part of this publication may be reproduced, stored in a retrieval system, or transmitted, in any form or by any means, electronic, mechanical, photocopying, recording, or otherwise, without the prior written permission of the Piper Aircraft Corporation, except for the inclusion of brief quotations in a review.

INTRODUCTION

TABLE OF CONTENTS/EFFECTIVITY

CHAPTER SECTION	SUBJECT	GRID NO.	EFFECTIVITY
	INTRODUCTION	3A3	July 1, 1993
	System/Chapter Index Guide	3A3	July 1, 1993

ÅINTRODUCTION

A. System/Chapter Index Guide

The following System/Chapter, Subsystem Section Index Guide is prepared in accordance with GAMA Specification No. 2 for use with Maintenance Manuals. The following chapters are not applicable to this Maintenance Manual: 31, 36, 38, 49, 53, 54, 60, 72, 75, and 83.å

SYSTEM/ CHAPTER	SUB-SYSTEM/ SECTION – GRID NUMBER	TITLE
INTRODUCTION		
4	AIRWORTHINESS LIMITATIONS	
	00 – 1C3	General
5	TIME LIMITS/MAINTENANCE CHECKS	
	00 – 1C6	General
	10 – 1C7	Time Limits
	20 – 1C8	Scheduled Maintenance
	50 – 1D2	Unscheduled Maintenance Checks
6	DIMENSIONS AND AREAS	
	00 – 1D8	General
7	LIFTING AND SHORING	
	10 – 1D23	Jacking
8	LEVELING AND WEIGHING	
	10 – 1E3	Weighing and Balancing
	20 – 1E4	Leveling
9	TOWING AND TAXIING	
	10 – 1E7	Towing
	20 – 1E8	Taxiing
10	PARKING AND MOORING	
	10 – 1E11	Parking
	20 – 1E12	Mooring
11	REQUIRED PLACARDS	
	20 – 1E15	Exterior Placards and Markings
	30 – 1E19	Interior Placards and Markings
12	SERVICING	
	00 – 1F4	General
	10 – 1F7	Replenishing
	20 – 1G1	Scheduled Servicing
20	STANDARD PRACTICES - AIRFRAME	
	00 – 1G19	General

INTRODUCTION (cont.)

A. System/Chapter Index Guide (cont.)

SYSTEM/ CHAPTER	SUB-SYSTEM/ SECTION – GRID NUMBER	TITLE
21	ENVIRONMENTAL SYSTEMS	
	00 – 1H8	General
	40 – 1H10	Heating
	50 – 1H14	Cooling
22	AUTO FLIGHT	
	00 – 1J9	General
23	COMMUNICATIONS	
	00 – 1J14	General
	20 – 1J16	Emergency Locator Transmitter
24	ELECTRICAL POWER	
	00 – 1K1	General
	30 – 1K3	DC Generation
	40 – 1L19	External Power
	50 – 1L21	Electrical Load Distribution
25	EQUIPMENT/FURNISHINGS	
	10 – 2A15	Flight Compartment
27	FLIGHT CONTROLS	
	00 – 2A23	General
	10 – 2B7	Aileron and Tab
	20 – 2B18	Rudder and Tab
	30 – 2C5	Elevator and Tab
	50 – 2C21	Flaps
28	FUEL	
	00 – 2D14	General
	10 – 2D20	Storage
	20 – 2E10	Distribution
	40 – 2E14	Indicating
29	HYDRAULIC POWER	
	00 – 2E21	General
	10 – 2F19	Main

INTRODUCTION (cont.)

A. System/Chapter Index Guide (cont.)

SYSTEM/ CHAPTER	SUB-SYSTEM/ SECTION – GRID NUMBER	TITLE
30	ICE AND RAIN PROTECTION	
	00 – 2G19	General
	10 – 2H1	Airfoil
	30 – 2H17	Pitot and Static
	40 – 2H19	Windows, Windshields and Doors
	60 – 2H21	Propellers/Rotors
	80 – 2H23	Detection
32	LANDING GEAR	
	00 – 3A18	General
	10 – 3B4	Main Gear and Doors
	20 – 3B22	Nose Gear and Doors
	30 – 3C16	Extension and Retraction
	40 – 3C22	Wheels and Brakes
	60 – 3D18	Position and Warning
33	LIGHTS	
	00 – 3E2	General Compartment
	10 – 3E6	Flight Compartment
	40 – 3E8	Exterior
34	NAVIGATION AND PITOT/STATIC	
	00 – 3E14	General
	10 – 3E18	Flight Instrtuments Pitot/Static
	20 – 3E22	Attitude & Direction
	40 – 3F2	Independent Position Determining
35	OXYGEN	
	00 – 3F10	General
	10 – 3F12	Crew – Passenger
37	VACUUM	
	00 – 3G8	General
	10 – 3G12	Distribution
	20 – 3G16	Indicating

INTRODUCTION (cont.)

A. System/Chapter Index Guide (cont.)

SYSTEM/ CHAPTER	SUB-SYSTEM/ SECTION – GRID NUMBER	TITLE
39	ELECTRICAL / ELECTRONIC PANELS & MULTIPURPOSE PARTS	
	40 – 3G20	Multipurpose Elecrtical Parts
51	STRUCTURES	
	00 – 3G24	General
52	DOORS	
	00 – 3H16	General
	10 – 3H18	Passenger/Crew
	30 – 3I2	Cargo
55	STABILIZERS	
	10 – 3I6	Horizontal Stabilizers
	30 – 3I12	Vertical Stabilizer
	40 – 3I14	Rudder
56	WINDOWS	
	10 – 3I18	Flight Compartment
	20 – 3I20	Cabin
57	WINGS	
	00 – 3J2	General
	20 – 3J4	Auxiliary Structure
	40 – 3J6	Attach Fittings
	50 – 3J12	Flight Surfaces
61	PROPELLERS	
	10 – 3J20	Propeller Assembly
	20 – 3K6	Controlling
70	STANDARD PRACTICES - ENGINE	
	00 – 3K12	General
71	POWER PLANT	
	00 – 3K16	General
	10 – 3L6	Cowling

INTRODUCTION (cont.)

A. System/Chapter Index Guide (cont.)

SYSTEM/ CHAPTER	SUB-SYSTEM/ SECTION – GRID NUMBER	TITLE
73	ENGINE FUEL SYSTEMS	
	10 – 4A15	Distribution
	20 – 4A20	Controlling
74	IGNITION	
	00 – 4B3	General
	10 – 4B5	Electrical Power Supply
	20 – 4B22	Distribution
	30 – 4C7	Switching
77	ENGINE INDICATING	
	00 – 4C13	General
	10 – 4C13	Power
	20 – 4C16	Temperature
78	EXHAUST	
	00 – 4C23	General
79	OIL	
	20 – 4D7	Distribution
	30 – 4D7	Indicating
80	STARTING	
	00 – 4D11	General
	10 – 4D15	Cranking
81	TURBINES	
	20 – 4E1	Turbo-Supercharger
91	CHARTS & WIRING DIAGRAMS	
	00 – 4E16	General
	10 – 4F19	Electrical Schematics
95	SPECIAL PURPOSE EQUIPMENT	
	00 – 4J8	Special Purpose Equipment

– END –

GRIDS 3A9 THROUGH 3A12
INTENTIONALLY LEFT BLANK

CHAPTER

32

LANDING GEAR

CHAPTER 32 - LANDING GEAR

TABLE OF CONTENTS/EFFECTIVITY

CHAPTER SECTION	SUBJECT	GRID NO.	EFFECTIVITY
32-00-00	GENERAL	3A18	July 1, 1993
32-00-00	DescriptionandOperation	2A18	July 1,1993
32-00-00	Troubleshooting	2A20	July 1,1993
32-10-00	MAIN GEAR	3B4	July 1,1993
32-10-00	Main Gear Oleo	3B6	July 1,1993
32-10-00	Disassembly of Main Gear Oleo	3B6	July 1, 1993
32-10-00	Cleaning, Inspection and Repair of		
32-10-00	Main Gear Oleo	3B9	July 1, 1993
32-10-00	Assembly of Main Gear Oleo	3B9	July 1,1993
32-10-00	MainLandingGearAssembly	3B10	July 1,1993
32-10-00	Removal of Main Landing Gear	3B10	July 1, 1993
32-10-00	Cleaning, Inspection and Repair of		
	Main Landing Gear	3B 11	July 1 , 1993
32-10-00	Installation of Main Landing Gear	3B11	July 1, 1993
32-10-00	AdjustmentofMainLandingGear	3B12	July 1,1993
32-10-00	AlignmentofMainLandingGear	3B13	July 1,1993
32-10-00	Main Gear Door Assembly	3B 16	July 1 , 1993
32-10-00	Removal of Main Gear Door		
	Assembly	3B16	July 1, 1993
32-10-00	Cleaning, Inspection and Repair of		
	Main Gear Door Assembly	3B 16	July I, 1993
32-10-00	Installation of Main Gear Door		
32-10-00	Assembly	3B16	July 1,1993
32-10-00	Main Gear Service Tolerances	3B18	July 1, 1993
32-20-00	NOSE GEAR	3B22	July 1,1993
32-20-00	Nose GearOleo	3B22	July 1,1993
32-20-00	Disassembly of Nose Gear Oleo	3B22	July 1,1993
32-20-00	Cleaning, Inspection and Repair of		
	Nose Gear Oleo	3B22	July 1,1993
32-20-00	AssemblyofNoseGearOleo	3B23	July 1,1993
32-20-00	Nose Landing Gear Assembly	3C2	July 1, 1993
32-20-00	Removal of Nose Landing Gear	3C2	July 1, 1993
32-20-00	Cleaning, Inspection and Repair of		
	Nose Landing Gear	3C4	July 1,1993
32-20-00	Installation of Nose Landing Gear	3C4	July 1, 1993
32-20-00	Adjustment of Nose Landing Gear	3C6	July 1, 1993
32-20-00	AlignmentofNoseLandingGear	3C7	July 1,1993

CHAPTER 32 - LANDING GEAR

TABLE OF CONTENTS/EFFECTIVITY

CHAPTER SECTION	SUBJECT	GRID NO.	EFFECTIVITY
32-20-00	Nose Gear Door Assembly	3C9	July 1, 1993
32-20-00	Removal of Nose Gear Door Assembly	3C9	July 1,1993
32-20-00	Cleaning, Inspection and Repair of Nose Gear Door Assembly	3C9	July 1,1993
32-20-00	Installation of Nose Gear Door Assembly	3C9	July 1,1993
32-20-00	Adjustment of Nose Gear Doors	3C9	July 1,1993
32-20-00	Nose Gear Service Tolerances	3C11	July 1,1993
32-30-00	EXTENSION AND RETRACTION	3C16	July 1,1993
32-30-00	Nose Gear Actuating Cylinder	3C16	July 1, 1993
32-30-00(1)	Removal of Nose Gear Actuating Cylinder	3C16	July l, 1993
32-30-00	Disassembly of Nose Gear Actuating Cylinder	3C16	July 1,1993
32-30-00	Cleaning, Inspection, and Repair of Nose Gear Actuating Cylinder	3C17	July 1, 1993
32-30-00	Assembly of Nose Gear Actuating Cylinder	3C17	July 1,1993
32-30-00	Installation of Nose Gear Actuating Cylinder	3C17	July 1,1993
32-30-00	Main Gear Actuating Cylinder	3C17	July 1,1993
32-30-00	Removal of Main Gear Actuating Cylinder	3C 17	July 1, 1993
32-30-00	Disssembly of Main Gear Actuating Cylinder	3C18	July 1,1993
32-30-00	Cleaning, Inspection, and Repair of Main Gear Actuating Cylinder	3C18	July 1, 1993
32-30-00	Assembly of Main Gear Actuating Cylinder	3C 19	July 1, 1993
32-30-00	Instllation of Main Gear Actuating Cylinder	3C20	July 1, 1993
32-40-00	WHEELS AND BRAKES	3C22	July 1,1993
32-40-00	NoseWheel Assembly	3C22	July 1,1993
3240-00	Removal and Disassembly of Nose Wheel	3C22	July 1, 1993
32-40-00	Inspection of Nose Wheel Assembly	3C23	July 1, 1993
32-40-00	Assembly and Installation of NoseWheel	3C23	July 1,1993

CHAPTER 32 - LANDING GEAR

TABLE OF CONTENTS/EFFECTIVITY

CHAPTER SECTION	SUBJECT	GRID NO.	EFFECTIVITY
32-40-00	Main Wheel Assembly	3C23	July 1, 1993
32-40-00	Removal and Disassembly of Main Wheel	3C23	July 1,1993
32-40-00	Inspection of Main Wheel Assembly	3C24	July 1, 1993
32-40-00	Assembly and Installation of Main Wheel	3C24	July 1,1993
32-40-00	Repair of Nose and Main Wheel Assemblies	3Dl	July 1,1993
32-40-00	Brakes	3Dl	July 1,1993
32-40-00	Brake Adjustment and Lining Tolerance	3Dl	July 1,1993
32-40-00	Wheel BrakeAssembly	3D2	July 1,1993
32-40-00	Removal and Disassembly of Wheel Brake Assembly	3D2	July 1 , 1993
32-40-00	Cleaning, Inspection and Repair of Wheel BrakeAssembly	3D3	July 1,1993
32-40-00	Assembly and Installation of Wheel BrakeAssembly	3DS	July 1,1993
32-40-00	Brake Master Cylinder (Hand Parking Brake)	3DS	July 1,1993
32-40-00	Removal of Brake Master Cylinder (Hand Brake)	3DS	July 1,1993
32-40-00	Disassembly of Brake Master Cylinder	3D7	July 1,1993
32-40-00	Cleaning, Inspection and Repair of Brake Master Cylinder	3D7	July 1, 1993
32-40-00	Assembly of Brake Master Cylinder	3D8	July 1, 1993
32-40-00	Installation of Brake Master Cylinder(HandBrake)	3D8	July 1,1993
32-40-00	Brake Cylinder (Toe Brake)	3D8	July 1,1993
32-40-00	Removal of BrakeCylinder	3D8	July 1,1993
32-40-00	Disassembly of Brake Cylinder	3D8	July 1, 1993
32-40-00	Cleaning, Inspection and Repair of BrakeCylinder	3Dll	July 1,1993
32-40-00	AssemblyofBrakeCylinder	3D12	July 1,1993
32-40-00	InstallationofBrakeCylinder	3D12	July 1,1993

CHAPTER 32 - LANDING GEAR

TABLE OF CONTENTS/EFFECTIVITY

CHAPTER SECTION	SUBJECT	GRID NO.	EFFECTIVITY
3240-00	BleedingBrakes	3D12	July 1,1993
32-40-00	Brake Bleeding Procedure (Gravity)	3D12	July 1, 1993
32-40-00	Brake Bleeding Procedure (Pressure)	3D13	July 1,1993
32-40-00	BrakeSystemLeakCheck	3D14	July 1,1993
3240-00	Bleeding of the Brakes After a Unit Has Been Changed	3D14	July 1,1993
32-60-00	POSITION AND WARNING	3D18	July 1,1993
32-60-00	Landing Gear Limit Switches	3D18	July 1, 1993
32-60-00	Adjustment of Nose Gear Up Limit Switch	3D18	July 1,1993
32-60-00	Adjustrnent of Nose Gear Down Limit Switch	3Dl9	July 1,1993
32-60-00	Adjustment of Main Gear Up Lirnit Switch	3Dl9	July 1,1993
32-60-00	Adjustment of Main Gear Down Lirnit Switch	3D20	July 1,1993
32-60-00	Adjustment of Landing Gear Safety Switch (Squat Switch)	3D20	July 1,1993
32-60-00	Adjustment of Gear Back-Up Extender Actuator Switch	3D21	July 1, 1993
32-60-00	Landing Gear Warning Switches (Throttle Switches)	3D21	July 1,1993
32-60-00	Landing Gear Up/Power Reduced Warning Switch	3D21	July 1,1993
32-60-00	Removal of Landing Gear Up/Power ReducedWarningSwitch	3D21	July 1,1993
32-60-00	Installation of Landing Gear Up/Power Reduced Warning Switch	3D21	July 1, 1993
32-60-00	Adjustment of Landing Gear Up/Power Reduced Warning Switch	3D22	July 1, 1993

GENERAL

This section contains instructions for the overhaul, inspection, and adjustment of the various components of the landing gear and brake systems; adjustments for the electrical limit, safety and warning systems. With the exception of brakes, this section does not cover the hydraulic function of the landing gear. This information may be found in the hydraulic section, chapter 29.

DESCRIPTION AND OPERATION

The PA-32R-301/301T is equipped with a retractable tricycle air-oil strut type landing gear which is hydraulically operated by an electrically powered reversible pump. A selector handle on the instrument panel to the left of the control quadrant is used to select gear up or down positions.

Gear positions are indicated by three green lights located above the selector lever for gear down and locked position. A red light located at the top of the instrument panel indicates gear unsafe condition. There is no indications that the landing gear has fully retracted other than all lights are out. When the landing gear moves to the down position and each downlock hook moves into its locked position, a limit switch is actuated to its normally closed (NC) condition. This will illuminate a green light indicating that the individual gear is safely down and locked. The activation of all three downlock switches will also shut off the hydraulic pump. As the instrument lights are turned on, the green lights will dim. When the gear begins to retract and the downlock hook disengages, the down limit switch actuates to the (NC) position and is in series with the (NC) circuit of the up limit switch allowing the gear unsafe light to come on. The gear unsafe light will remain on until the gear is up and all up limit switches are actuated to their normally open (NO) position.

The red gear unsafe light also operates simultaneously with the warning horn. Both serve a dual purpose. Their primary purpose is to give warning when power is reduced below approximately 14 inches of manifold pressure and the landing gear has not reached the down and locked position. This circuit is controlled by the three paralleling down limit switches connected in series with the throttle switch. The secondary function of the warning light and horn is to give warning when the gear selector handle is up while the airplane is on the ground or airspeed is below that required to close the hydraulic valve and the pump switch of the backup gear extender unit. Airplanes that have had the backup gear extender unit removed, or the system not installed, will get the warning light and horn only when the flaps are extended to 10 or more. A micro switch installed on a cam located on the flap torque tube will when closed, give an indication that the gear is not down and locked regardless of the gear lever up or down position. When the airplane is setting on the ground, the warning circuit is controlled through the (NO) side of the safety switch (squat switch) located on the left gear and on the up position of the gear selector lever. When the airplane is raised from the ground, such as in flight, far enough to move the safety switch to its (NC) position, then current is directed in series through the hydraulic pressure switch, the pump switch (providing airspeed has actuated the switch to its (NO) position), and the up positioned selector lever. The up limit, safety, pressure and selector switch, and pump solenoids are all protected by the landing gear control and warning circuit protector. (Refer to Chapter 91 for electrical schematic.)

– NOTE –

PA32R-301 airplanes with s/n's 32R-8013001 thru 32R-8613005 and 3213001, and PA32R-301T airplanes with s/n's 32R-8029001 thru 32R-8029110, 32R-8029121 thru 32R-8629006 and 3229001 thru 3229002 may be equipped with a back-up landing gear extender. Refer to Piper Service Bulletin No. 866A

Each landing gear is retracted and extended by a single hydraulic cylinder attached to the drag link assembly of the nose gear, and the side brace link assemblies of each main gear. As the gear retracts, doors partially enclose each gear through mechanical linkage. Each main gear is held in its up position by hydraulic pressure on each cylinder. There are no uplocks, and loss of hydraulic pressure will allow the gears to drop. It is preferred that the landing gears be extended and retracted by the normal operation of the gear selector handle. There is an emergency backup system for extending the gear, with two (2) different type systems in this airplane. Older models have an emergency extension lever located between the pilot seats, that when selected, releases the hydraulic pressure to the up side by means of opening the emergency free fall gear valve. With this system, if the airspeed drops below 103 KIAS, engine power off, the landing gear will automatically extend regardless of the position of the gear selector handle, or the emergency gear lever. A pressure sensing chamber which senses static and ram air pressure changes, extends and retracts the landing gear automatically. The emergency extension lever may also be used to manually overcome its automatic free fall funciton, when needed in special situations by the pilot. A perfect example would be a deliberate wheels up landing needed for emergency landing in water, or for special flight maneuvers requiring low airspeeds and power settings, where automatic extension of the landing gear is not wanted.

As of model year 1986, the pressure sensing chamber has been eleminated, with the introduction of a kit that changes the system to a non-automatic free-falling landing gear system. (Refer to service bulletins 769 and 866A.) A gear down emergency free fall valve, located under the floorboard on the left side of the forward baggage compartment, allows the landing gear to extend when opened by the operation of a push pull cable knob which is located between the two pilot seats. When using the manual extention latch or knob, the gear position is controlled by the selector switch, regardless of airspeed or power combinations. An override latch mechanism is installed in the backup automatic gear extension system, designed to bypass the automatic feature of the system. A flashing warning light mounted just below the gear selector lever will light whenever the override latch is in use. Pulling up on the extension lever disengages the latch.

To help the nose gear to extend, there are two springs, one inside the other, mounted on arms above the gear links. The main gear requires no assist springs. Once the gear is down and the downlock hooks engage, a spring maintains each hook in a locked position until hydraulic pressure releases it. A further description of the hydraulic system and the back-up automatic and manual extender units will be found in chapter 29, Hydraulic System.

The nose gear is steerable through a 45 degree arc by use of the rudder pedals. As the gear retracts, however, the steering linkage becomes disengaged from the gear so that rudder pedal action with the gear retracted is not impeded by the nose gear operation. A shimmy dampener is also incorporated in the nose wheel steering mechanism.

The two main wheels are equipped with self-adjusting single-piston single disc hydraulic brake assemblies. Toe brakes are standard on both pilot and copilot's rudder pedals. An optional heavy duty double piston, single-disc brake, wheel and tire kit is available as an option or as a field kit (Kit No. 761-052).

A parking brake is incorporated with a handle and may be used by pulling back on or pushing forward on, only when pushing forward a button located left of the handle. To release the hand brake, pull aft on the handle and allow it to swing forward. Hydraulic fluid for the cylinder is supplied by a reservoir installed on the left forward side of the firewall.

TROUBLESHOOTING.

Mechanical and electrical switch troubles peculiar to the landing gear system are listed in Chart 1. When troubleshooting, first eliminate hydraulic malfunctions as listed in Chapter 29. Then proceed in switch malfunctions and last to the mechanical operation of the gear itself, both of which are listed in this section. Always place the airplane on jacks before attempting any troubleshooting of the gear. To operate the gear, the emergency gear lever must be maintained in the up override position.

CHART 1.
TROUBLESHOOTING CHART (Sheet 1 of 7)

Trouble	Cause	Remedy
(PA-32R-301 SP/301T SP) Red gear unsafe light out. while gear is in transit.	Indicator lamp burned out	Replace lamp
or (PA-32R-301 II HP) Red GEAR WARN annunciator out light while gear is in transit.	Indicator light ground incomplete.	Check ground circuit.
	Indicator light circuit wire broken.	Check wiring.
	Indicator light circuit breaker open.	Reset circuit breaker and determine cause for open circuit breaker.
(PA-32R-301 SP/301T SP) Red gear unsafe light on though gear has retracted.	One or more up limit switches failed.	Isolate and replace switch.
or (PA-32R-301 II HP) Red GEAR WARN annunciator light on though gear has retracted.	Nose gear up limit switch out of adjustment.	Check gear up adjustment and readjust up limit switch.
	Main gear not retracting far enough to actuate switch.	Check gear up adjustment.
(PA-32R-301 SP/301T SP) Red gear unsafe light on though gear is down and locked.	One or more down limit switches failed.	Isolate and replace switch.
or (PA-32R-301 II HP) Red GEAR WARN annunciator on though gear is down and locked.	Nose gear down limit switch out of adjustment.	Readjust down limit switch.
	Main gear down limit switch out of adjustment.	Readjust down limit switch.

– NOTE –

The out of adjustment or failed switch may be determined by noting which down light is not lit.

TROUBLESHOOTING.

CHART 1.
TROUBLESHOOTING CHART ((Sheet 2 of 7)

Trouble	Cause	Remedy
(PA-32R-301 SP/301T SP) Red gear unsafe light operates on and off after gear has retracted. or (PA-32R-301 II HP) Red GEAR WARN annunciator light operates on and off after gear has retracted.	Light circuit wire loose. Hydraulic system losing pressure. Gear up switch out of adjustment.	Check wiring. Refer to Hydraulic System, Chapter 29. Check gear up adjustment and then switch adjustment.
(PA-32R-301 SP/301T SP) Red gear unsafe light out and one green gear down light out though gear is down and locked. or (PA-32R-301 II HP) Red GEAR WARN annunciator out and one green gear down light out hough gear is down and locked. ***NOTE***: ***Verify navigation lights are off (daytime.)***	Lamp burned out. Gear down limit switch failed. Light circuit wire broken.	Replace lamp. Replace switch. Check wiring.
(PA-32R-301 SP/301T SP) Red gear unsafe light and all green lights out. or (PA-32R-301 II HP) Red GEAR WARN annunciator and all green lights out. ***NOTE***: ***Verify navigation lights are off (daytime.)***	Indicator lights circuit breaker open. Light circuit wire broken.	Reset circuit breaker and determine cause for open circuit breaker. Check wiring.

TROUBLESHOOTING.

CHART 1.
TROUBLESHOOTING CHART ((Sheet 3 of 7)

Trouble	Cause	Remedy
(PA-32R-301 SP/301T SP) Red gear unsafe light and horn fail to operate when throttle is near closed and landing gear is retracted.	Landing gear selector circuit breaker open.	Reset circuit breaker and determine cause for open circuit breaker.
or (PA-32R-301 II HP) Red GEAR WARN annunciator and horn fail to operate when throttle is near closed and anding gear is retracted.	Micro switch “A” at throttle out of adjustment.	Adjust micro switch “A”
	Micro switch “A” failed.	Replace switch.
	Warning horn and light circuit wire broken.	Check wiring.
	Diode in circuit between throttle switch “A” and light/horn open.	Replace diode. NOTE: When replacing diode, connect banded end (cathode) to terrminal ends of wires G2Q and G2K on mounting block.
(PA-32R-301 SP/301T SP) Red gear unsafe light and horn fail to stop when throttle is closed and gear has extended. (Gear extended through the use of the free fall lever or [if back-up gear extender installed] lack of air speed.) or (PA-32R-301 II HP) Red GEAR WARN annunciator and horn fail to stop when throttle is closed and gear has extended.(Gear extended through use of the free fall lever.)	Gear selector handle in up position.	Place handle in down position.

TROUBLESHOOTING.

CHART 1.
TROUBLESHOOTING CHART ((Sheet 4 of 7)

Trouble	Cause	Remedy
(PA-32R-301 SP/301T SP) Red gear unsafe light and horn fail to operate when selector switch is moved to up position with gear extended and throttle not full forward. or (PA-32R-301 II HP) Red GEAR WARN annunciator and horn fail to operate when selector switch is moved to up position with gear extended and throttle not full forward.	Warning light and horn circuit wire broken. Annunciator light and horn circuit wire broken.	Check wiring. Check wiring.
Above condition on ground.	Defective safety (squat) switch.	Replace switch.
(PA-32R-301 SP/301T SP) Hydraulic pump shuts off, but red gear unsafe light remains on. or (PA-32R-301 II HP) Hydraulic pump shuts off, but Red GEAR WARN annunciator remains on.	Gear not fully retracted. Gear not contacting up micro switches.	Check gear retraction adjust ments. Check gear up switches.
(PA-32R-301 SP/301T SP) or (PA-32R-301 II HP) Green gear down lights dim though position light switch is off,and gear is down and locked.	Failed instrument panel light control switch. (Lights grounding and through dimming resistor instead of instrument panel light control.)	Replace switch.
(PA-32R-301 SP/301T SP) or (PA-32R-301 II HP) Green gear down light fails to go out with gear in transit or retracted.	Gear down limit switch failed.	Replace switch.

TROUBLESHOOTING.

CHART 1.
TROUBLESHOOTING CHART ((Sheet 5 of 7))

Trouble	Cause	Remedy
(PA-32R-301 SP/301T SP) or (PA-32R-301 II HP) Green gear down lights will go out and not dim when position light switch is turned on though gear is down and locked.	Green light ground dimming resistor open.	Replace resistor.
(PA-32R-301 SP/301T SP) or (PA-32R-301 II HP) Green gear down lights blink momentarily before the down lock is engaged on roller.	Micro switch out of adjustment.	Adjust microswitch.
(PA-32R-301 SP/301T SP) or (PA-32R-301 II HP) Nose landing gear shimmies during fast taxi, take-off or landing.	Internal wear in shimmy dampener.	Replace shimmy dampener.
	Shimmy dampener or bracket loose at mounting.	Replace necessary parts and bolts.
	Tire out of balance	Check balance and replace tire if necessary.
	Worn or loose wheel bearings.	Replace and/or adjust wheel bearings.
	Worn torque link bolts and/or bushings.	Replace bolts and/or bushings.
Excessive or uneven wear on nose tire.	Incorrect operating pressure.	Inflate tire to correct presure.
	Wear resulting from shimmy.	Refer to proceedings for correction

TROUBLESHOOTING.

CHART 1.
TROUBLESHOOTING CHART ((Sheet 6 of 7)

Trouble	Cause	Remedy
(PA-32R-301 SP/301T SP) or (PA-32R-301 II HP) Nose gear fails to steer properly.	Oleo cylinder bindings in strut housing.	Lubricate strut housing (refer to Lubrication Chart).
		Cylinder and/or strut housing bushings damaged.
	One brake dragging.	Determine cause and correct.
	Steering arm roller sheared at top of strut.	Replace defective roller.
	Steering bellcrank loose on attachment plate.	Readjust and tighten.
	Steering bellcrank bearing and/or bolt worn.	Replace bearing and/or bolt.
	Shimmy dampener galling or binding.	Replace.
(PA-32R-301 SP/301T SP) or (PA-32R-301 II HP) Nose gear fails to straighten when landing gear extends.	Steering arm roller sheared at top of strut.	Replace defective roller.
	Incorrect rigging of nose gear steering.	Check nose gear steering adjustment.
(PA-32R-301 SP/301T SP) or (PA-32R-301 II HP) Nose gear fails to straighten when landing gear retracts	Centering guide roller sheared.	Replace roller.
	Damaged guide.	Replace guide.

TROUBLESHOOTING.

CHART 1.
TROUBLESHOOTING CHART ((Sheet 7 of 7)

Trouble	Cause	Remedy
(PA-32R-301 SP/301T SP) or (PA-32R-301 II HP) Main landing gear shimmies during fast taxi, take-off, or landing.	Tire out of balance	Check balance and replace tire if necessary.
	Worn or loose wheel bearings. bearings.	Replace and/or adjust wheel
	Worn torque link bolts and/or bushings.	Replace bolts and/or bushings.
(PA-32R-301 SP/301T SP) or (PA-32R-301 II HP) Excessive or uneven wear on main tires.	Incorrect operating pressure.	Inflate tire to correct pressure.
	Wheel out of alignment (toe in or out).	Check wheel alignment
	Lower side brace link out of adjustment, allowing gear to slant in or out.	Check gear adjustment.
(PA-32R-301 SP/301T SP) or (PA-32R-301 II HP) Strut bottoms on normal landing or taxiing on rough ground.	Insufficient air and/or fluid in strut.	Service strut with air and/or fluid.
	Defective internal parts in strut.	Replace defective parts.
(PA-32R-301 SP/301T SP) or (PA-32R-301 II HP) Landing gear doors fail to completely close.	Landing gear not retracting completely.	Check adjust ment of landing gear.
	Door retraction mechanism out of adjustment.	Check adjustment.

INTENTIONALLY LEFT BLANK

MAIN GEAR

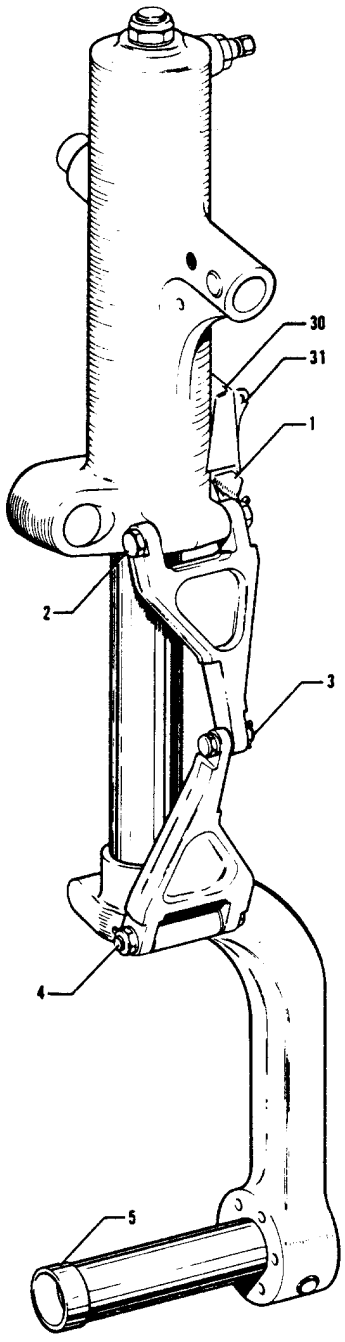

1. BRACKET, SWITCH ACTUATOR
2. BOLT, WASHERS, NUT AND COTTER PIN
3. BOLT, WASHERS, NUT AND COTTER PIN
4. BOLT, WASHERS, NUT AND COTTER PIN
5. AXLE NUT
6. NUT
7. WASHER
8. RETAINER
9. O-RING
10. VALVE ASSEMBLY
11. HOUSING, OLEO STRUT
12. ORIFICE TUBE
13. PLATE, ORIFICE
14. SNAP RING
15. LINK ASSEMBLY, UPPER
16. LINK ASSEMBLY, LOWER
17. RETAINER PIN, BEARING
18. BEARING, UPPER
19. O-RING, OUTER
20. BEARING, LOWER
21. O-RING, INNER
22. WIPER STRIP
23. WASHER
24. SNAP RING
25. PISTON TUBE
26. PLUG
27. O-RING
28. FORK ASSEMBLY
29. BOLT ASSEMBLY
30. BRACKET - SQUAT SWITCH
31. PLATE, SPRING ATTACHMENT
32. PISTON RING

Main Gear Oleo Strut Assembly
Figure 1 (Sheet 1 of 2)

MAIN GEAR (Cont.)

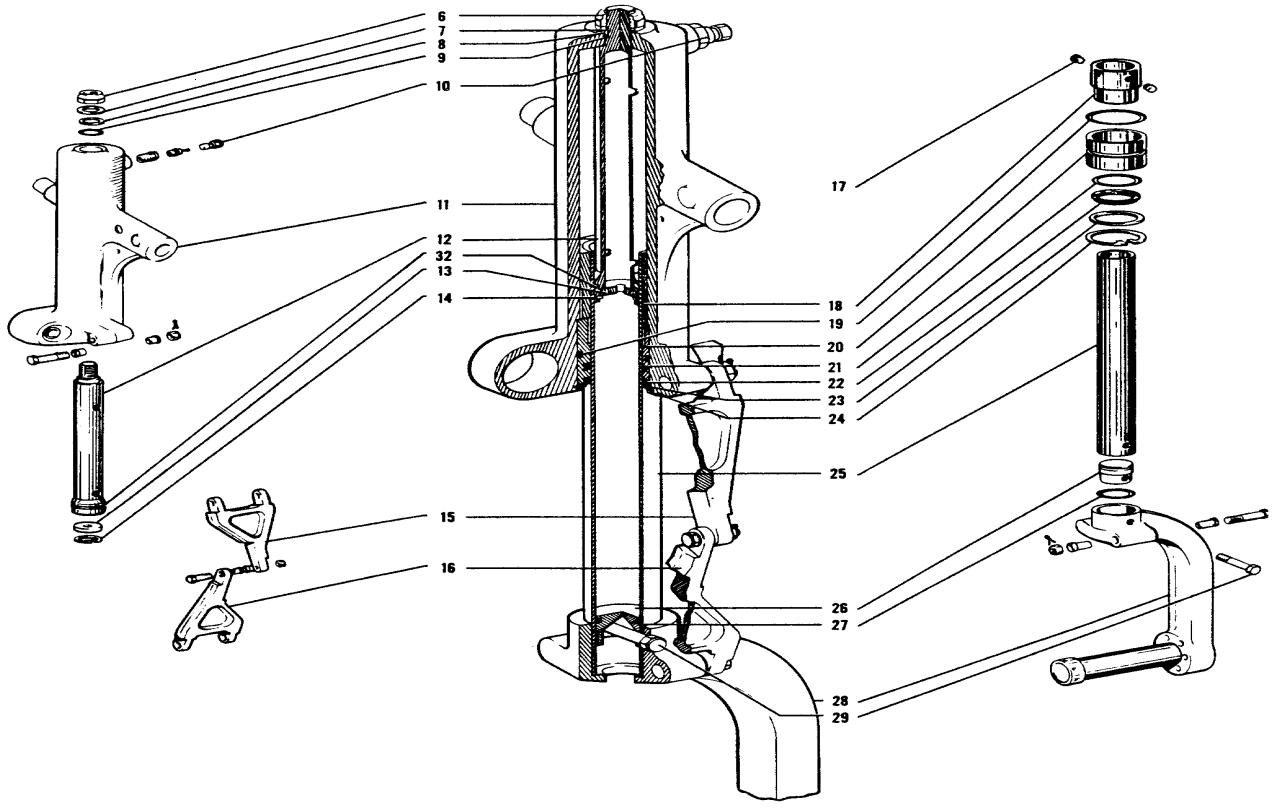

Main Gear Oleo Strut Assembly
Figure 1 (Sheet 2 of 2)

MAIN GEAR (Cont.)

MAIN GEAR OLEO

DISASSEMBLY OF MAIN GEAR OLEO (Refer to figure 1)

The main gear oleo assembly may be removed and disassembled from the gear oleo housing with the gear removed from or installed in the airplane.

1. Place airplane on jacks.
2. Place a drip pan under main gear to catch spillage.
3. Remove air and fluid from oleo. Depress air valve core pin until strut pressure has diminished; remove filler plug and with a thin hose siphon as much hydraulic fluid from strut as possible.
4. Disconnect brake line at joint located in wheel well.
5. To remove piston tube assembly from oleo housing, remove upper and lower torque link connecting bolt assembly and separate links. Note number and thickness of spacer washer(s) between two links.
6. Compress piston tube; reach up into tube and release snap ring from annular slot at bottom of oleo housing.
7. Pull piston tube with component parts from cylinder housing.
8. Piston tube components may be removed by reaching in tube and pushing out upper bearing retainer pins. Slide off upper bearing with O-rings, wiper and washer.
9. To remove orifice tube from oleo housing, remove locknut and washer from top of housing. Draw tube with O-ring and retainer from housing.
10. Orifice plate is removed from bottom of orifice tube by releasing snap ring holding plate in position.
11. To remove piston tube plug and O-ring located in bottom end of tube, remove bolt assembly and insert a rod up through hole in body of fork and push plug with O-ring from top of tube.

MAIN GEAR (Cont.)

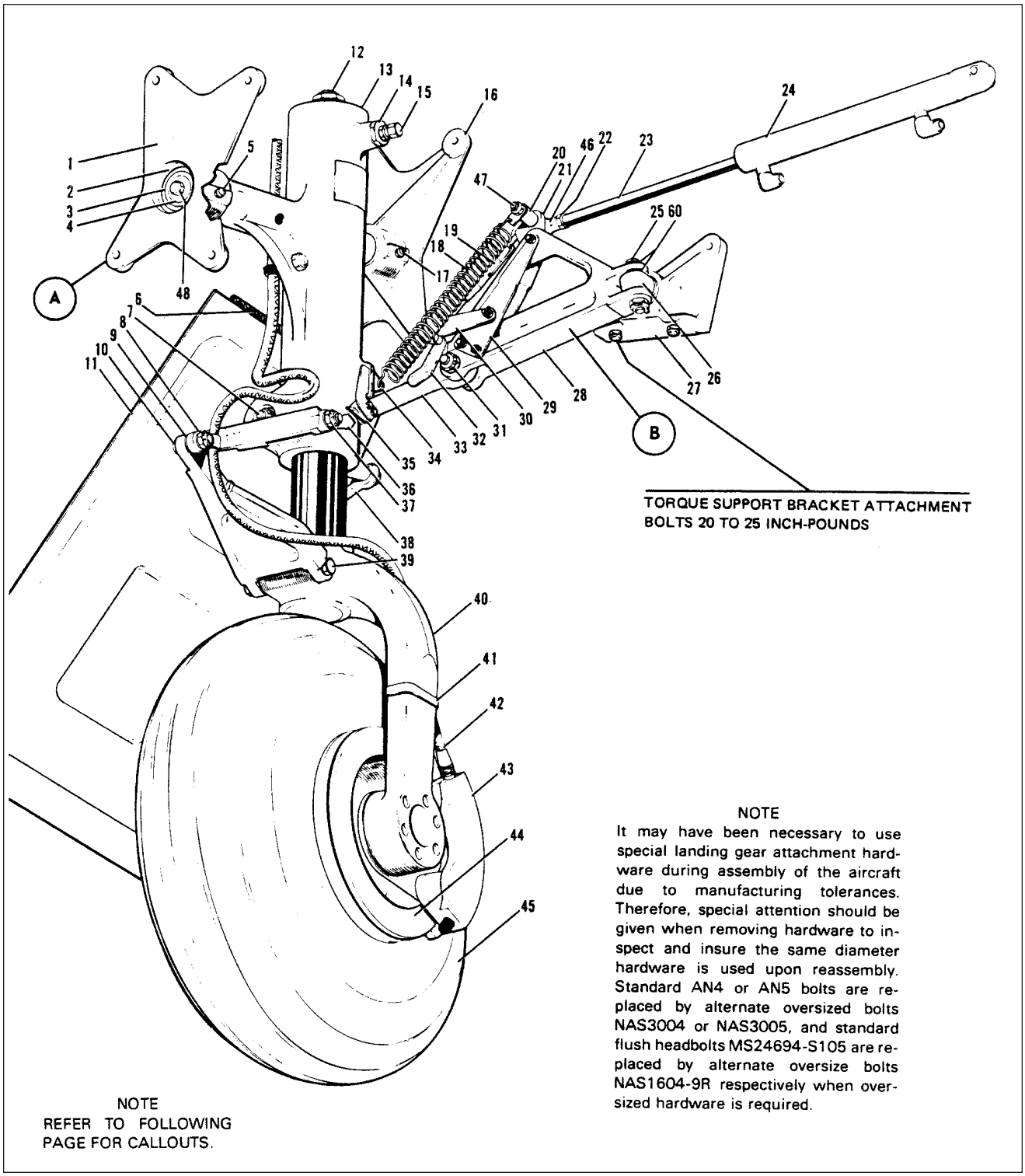

Main Gear Installation
Figure 2 (Sheet 1 of 2)

MAIN GEAR (Cont.)

1. SUPPORT FITTING, AFT
2. SNAP RING
3. BEARING
4. RETAINER, TUBE ASSEM8LY
5. FITTING, GREASE
6. HINGE, GEAR DOOR
7. BOLT, WASHERS AND NUT
8. LINK, UPPER
9. WASHER, SPACER
10. LINK, LOWER
11. DOOR, GEAR
12. NUT
13. HOUSING, STRUT
14. PLUG, HYDRAULIC FLUID
15. VALVE ASSEMBLY
16. SUPPORT FITTING, FORWARD
17. FITTING, GREASE
18. SPRING, DOWNLOCK
19. TURNBUCKLE
20. SWIVEL ASSEMBLY
21. RETRACTION FITTING
22. JAM NUT
23. ROD, PISTON
24. CYLINDER, HYDRAULIC ACTUATING
25. BOLT, WASHERS, NUT AND COTTER PIN
26. STUD, SIDE BRACE SUPPORT
27. SUPPORT BRACKET
28. LINK, UPPER SIDE BRACE
29. PLATE
30. HOOK, DOWNLOCK
31. BOLT, WASHERS, NUT AND COTTER PIN
32. PIN, DOWNLOCK
33. LINK, LOWER SIDE BRACE
34. BRACKET, SPRING
35. SWITCH, SAFETY
36. ACTUATOR, SAFETY SWITCH
37. BOLT, WASHERS, NUT AND COTTER PIN
38. ROD, GEAR DOOR
39. BOLT, WASHERS, NUT AND COTTER PIN
40. FORK GEAR
41. CLAMP
42. HOSE, BRAKE
43. BRAKE HOUSING
44. BRAKE DISC
45. TIRE
46. ROD END BEARING
47. BOLT, WASHER, NUT AND BUSHING
48. BOLT
49. SHIM WASHER
50. BOLT
51. WASHER
52. WASHER
53. BEARING, FORWARD SUPPORT
54. BEARING, AFT SUPPGRT
55. SNAP RING
56. ROD END BEARING
57. JAM NUT
58. BRACKET, SWITCH
59. CLIP, SAFETY
60. BUSHING, TAPERED

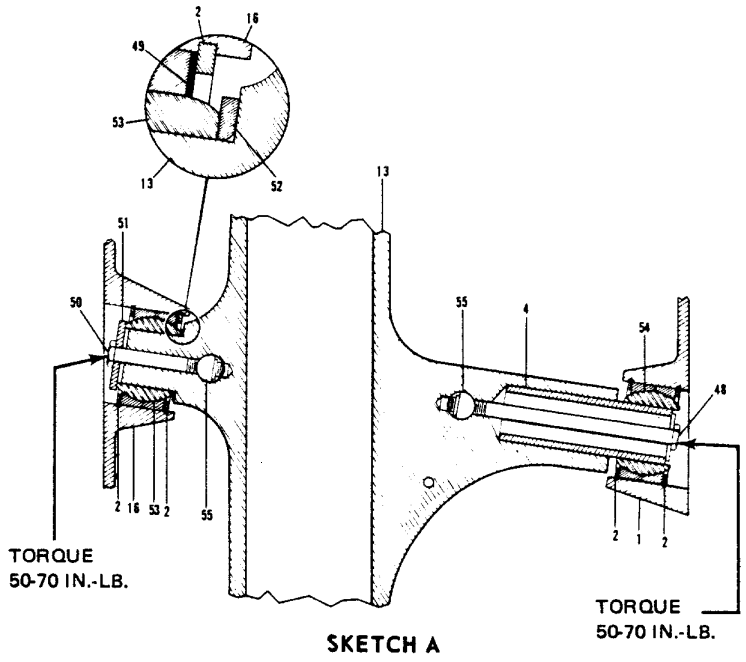

SKETCH A

NOTE: IF WHEN THE TRUSS ASSEMBLY IS DISMANTLED IT IS FOUND THAT THE BUSHINGS NEED TO BE REPLACED, THE HOLES IN THE UPPER, LINK FLANGES FOR THE 14843-16 SHOULD BE LINE REAMED TO .376 .375. ALL BUSHINGS SHOULD BE PRESS FIT. IF THEY FIT LOOSELY, INSTALL USING LOCKTITE.

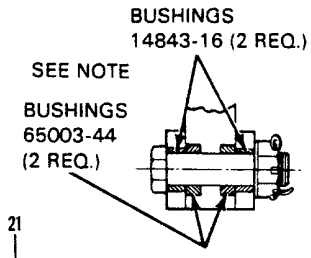

SECTION A-A

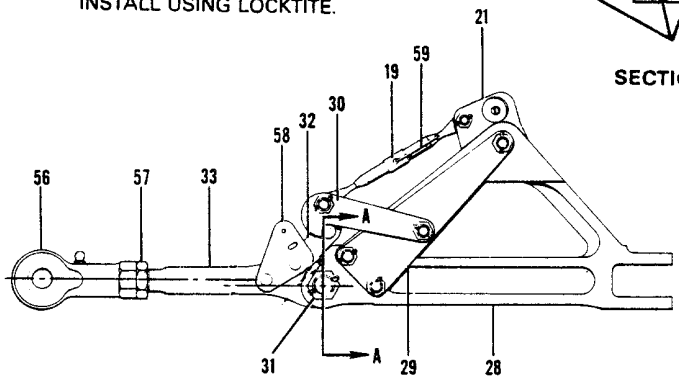

Main Gear Installation
Figure 2 (Sheet 2 of 2)

MAIN GEAR (Cont.)

CLEANING, INSPECTION AND REPAIR OF MAIN GEAR OLEO

1. Clean all parts with a suitable dry type cleaning solvent.
2. Inspect landing gear oleo assembly components for following:
   a. Bearings and bushings for excess wear, corrosion, scratches and overall damage.
   b. Retaining pins for wear and damage.
   c. Lock rings for cracks, burrs, etc.
   d. Cylinder and orifice tube for corrosion, scratches, nicks and excess wear.
   e. Orifice plate for hole restriction.
   f. Fork tube for corrosion, scratches, nicks, dents and misalignment.
   g. Air valve general condition.
3. Repair of oleo is limited to smoothing out minor scratches, nicks and dents and replacement of parts.

ASSEMBLY OF MAIN GEAR OLEO (Refer to Figure 1)

1. Determine that all parts are cleaned and inspected.
2. To install piston tube plug, first lubricate plug o-ring with hydraulic fluid (MIL-H-5606A) and install it on plug. Lubricate inside wall of tube. Insert plug into top of tube and push it to fork end. Align the bolt holes of fork, tube and plug, and install bolt assembly.
3. If desired, cement a cork in hole in bottom of fork body to prevent dirt from entering between fork and tube.
4. To assemble components of orifice tube, insert orifice plate into bottom of tube and secure with snap ring.
5. To install tube in oleo housing, insert tube up through housing. With end of tube exposed through top of housing, install o-ring, retainer, washer, and locknut. Tighten locknut only finger tight at this time.
6. Assemble components of piston tube on tube by placing, in order, snap ring, washer, lower bearing with outer and inner o-ring and upper bearing. Align two .125 diameter holes and lock pin holes with corresponding holes in piston tube and install pins.
7. Lubricate wall of cylinder oleo housing and tube, and carefully insert tube assembly into housing, guiding orifice tube into piston tube. Install wiper strip, slide washer into position and secure assembly with snap ring.
8. Tighten locknut at top of housing.
9. Ascertain that bushings are installed in upper and lower torque links and then install links. Torque link bolt assemblies should be lubricated and installed with flat of bolt head hex adjacent to milled stop of wide end of link. (Use same thickness of spacer washers between two links as those removed to maintain correct wheel alignment.) Tighten bolts only tight enough to allow no side play in links, yet be free enough to rotate.

– NOTE –

Instructions contained in step 10 pertain to left oleo strut assemblies only.

10. Assemble squat switch actuator bracket on bolt assembly. Insert a rivet through hole provided in bracket into upper link and install nut. Install squat switch bracket immediately above actuator bracket.

MAIN GEAR (Cont.)

11. Attach spring attachment plate to mounting lug on base of housing immediately above upper link.
12. Connect brake line and bleed brakes.
13. Lubricate gear assembly. (Refer to Lubrication Chart, Chapter 12.)
14. Compress and extend strut several times to ascertain strut will operate freely. Weight of gear wheel and fork should allow strut to extend.
15. Service oleo strut with fluid and air. (Refer to Oleo Struts, Chapter 12.)
16. Check main gear alignment (refer to Alignment of Main Landing Gear) and gear operation. Ascertain that gear is down and locked.
17. Remove airplane from jacks.

MAIN LANDING GEAR ASSEMBLY

REMOVAL OF MAIN LANDING GEAR (Refer to Figure 2)

1. Place airplane on jacks.
2. Side brace link assembly may be removed by following procedure:
   a. With gear in extended position, disconnect gear downlock spring.
   b. Disconnect rod end of actuating cylinder from retraction fitting on upper side brace removing nut, washer and bolt, and bushing and spring swivel.
   c. Disconnect lower side brace link from gear housing by removing attachment nut, washer and bolt. Note bushings on each side of end bearing.
   d. Disconnect upper side brace link from side brace support fitting stud by removing cotter pin, nut, washer and attachment bolt.
   e. Remove side brace support fitting by removing cap bolts securing fitting to web of spar.
   f. Remove assembly and further disassemble and inspect as needed.
3. Strut housing with components may be removed by following procedure:
   a. Disconnect brake line at its upper end in wheel well.
   b. Disconnect gear door actuating rod at gear housing.
   c. Remove access plate located on underside of wing, aft of landing gear.
   d. If not previously disconnected, disconnect lower side brace link from gear housing.
   e. Disconnect forward support fitting of housing from web of main spar by removing fitting attachment bolts.
   f. Remove retainer tube in aft support fitting that supports aft arm of housing by reaching through access opening on underside of wing, through hole in web and removing bolt that secures tube in housing. Insert a hook through bolt hole in tube, and slide it aft from support fitting. Remove tube from wing.
   g. Allow gear to drop free from wing.
   h. Aft support fitting may be removed by holding nuts in position, reaching through access opening, and removing fitting attachment bolts.
   i. Forward support fitting may be removed from arm of housing by removing bolt and washer from base side of fitting. Slide fitting from arm. Remove washer from arm.
4. Either bearing installed in support fittings may be removed by removing snap rings that hold bearing in housing. Push bearing from housing.

MAIN GEAR (Cont.)

CLEANING, INSPECTION AND REPAIR OF MAIN LANDING GEAR

1. Clean all parts with suitable dry type cleaning solvent.
2. Inspect gear components for the following unfavorable conditions:
   a. Bolts, bearing and brushing for excess wear, corrosion and damage.
   b. Gear housing, side brace links, torque links and attachment plates for cracks, bends or misalignment.
   c. Downlock hook for excessive wear of bearing surfaces.
3 .Inspect gear downlock spring for the following:
   a. Excessive wear or corrosion, especially around hook portion of spring. A spring should be rejected if wear or corrosion exceeds one-quarter diameter of spring. Clean away all corrosion and repaint.
   b. Check spring for load tensions below minimum allowable tolerance. Minimum tension of spring is 48 pounds pull at 7.9 inches. Measurement is taken from inner side of each hook.
4. Check general condition of each limit switch and its actuator, and wiring for fraying, poor connections or conditions that may lead to failures.
5. Check side brace link through center travel by attaching upper and lower links, setting them on a surface table, and ascertaining that when stop surfaces of the two links touch, linkage is not less than .062 nor more than .125 of an inch through center. Should distance exceed required through center travel and bolt and bushings are tight, replace one or both links.
6. With side brace links assembled and checked, ascertain that when stop surfacess of the two links contact, clearance between each downlock hook and flat of downlock pin is not less than 0.010 of an inch. Should clearance be less than that required, hook only may be filed not to exceed a gap of more than 0.025 of an inch. Maximum allowable clearance between each hook and downlock pin that are service worn is 0.055 of an inch. Should clearance be more than 0.055 of an inch, replace pin, check clearance and then if still beyond tolerance, replace hooks. Gap between each hook should be equal.
7. Repair of landing gear is limited to reconditioning of parts such as replacing components, bearings and bushings, smoothing out minor nicks and scratches and repainting areas where paint has chipped or peeled.

INSTALLATION OF MAIN LANDING GEAR (Refer to Figure 2)

– NOTE–

When assembling components of landing gear, lubricate bearings, bushings and friction surfaces with proper lubricant as described in chapter 12.

1. Insert a gear support bearing in each support fitting and secure with snap rings. Check bearing for excess end play, shim as necessary with shim washers (P/N 62833-44).
2. Gear housing may be installed in wheel well of wing by the following procedure:
   a. Place spacer washer and then forward support fitting on forward arm of housing. Determine that barrel nut is properly positioned in arm and insert attachment bolt through washer and fitting into arm. Tighten bolt and ascertain that bearing is free to rotate.

MAIN GEAR (Cont.)

b. Position aft support fitting at its attachment point in wheel well and secure with bolts, washers and nuts. Install nuts and washers by reaching through access hole on underside of wing.
c. With retainer tube for aft arm of housing in hand, reach up through access opening and insert tube into support fitting through hole in web.
d. Position gear housing in wheel well and install forward support fitting with bolts and washers (One each AN960-416 and AN960-416L washer per bolt.)
e. Push retainer tube into arm of housing and secure with bolt.
f. Check that gear rotates freely in its support fittings and recheck thrust.
g .Connect brake line to its mating line in wheel well and bleed brakes.

3. Gear side brace link assembly may be installed by the following procedure:
   a. Position link support bracket with swivel stud installed at its attachment point on web of spar and secure with bolts and washers.

– NOTE –

When installing new wing, it will be necessary to back drill two (2) holes 0.250 inch and countersink 100 x .499 through spar cap. (Screw head should be flush with spar.) Use hole in support bracket as guide in drilling.

   b. Ascertain that upper and lower links are assembled with downlock hook retraction fitting, etc, attached, and through travel of links and downlock hook clearance checked according to cleaning inspection and repair of main landing gear.
   c. Attach upper link to swivel stud of support fitting and secure with bolt, bushing, washer, nut and copper pin.
   d. Actuating cylinder rod end bearing and lower side brace link may be attached respectively to retraction fitting and strut housing during adjustment of landing gear.
4. Ascertain that landing gear is lubricated per Lubrication Chart, Chapter 12.
5. Check adjustment of landing gear per adjustment of main landing gear.
6. Check alignment of wheel per alignment of main landing gear.
7. Install access plate on underside of wing and remove airplane from jacks.

ADJUSTMENT OF MAIN LANDING GEAR

1. Place airplane on jacks.
2. Level airplane laterally and longitudinally. (Refer to Leveling, Chapter 8.)
3. Disconnect gear door actuating rods at either door or housing, as desired, by removing rod attachment bolt. Secure door out of way.
4. Adjust rod end on upper side brace link with no load on wheels, to obtain 90 degree angle between wheel centerline and level floor line on outboard side of gear.
5. Check that rod end has sufficient thread engagement in end bearing, align flat sides of bearing casting with flat side of bearing and tighten jam nut.
6. Adjust turnbuckle of downlock mechanism by first ascertaining that gear is down and locked, and then move retraction fitting outboard until it contracts stop slot of side brace link. Hold fitting in this position and turn turnbuckle barrel until downlock hooks make contact with lock pin. Safety the turnbuckle.

MAIN GEAR (Cont.)

7. For easier adjustment of downlock limit switch, it may be set at this time as explained in Adjustment of Main Gear Down Limit Switch.
8. Retract and extend gear manually several times to ascertain that side brace link falls through center; downlock hook falls into position and there is no binding of gear assembly.
9. Gear should be adjusted in up position to allow gear fork to press lightly into rubber bumper pad on wing. Adjustment may be accomplished as follows:

– NOTE –

If it requires less than .025 of an inch to move gear into correct adjustment, Steps b and f thru h need only be followed.

   a. Ascertain that rod end bearing of actuating cylinder is disconnected from retraction fitting.
   b. Actuate hydraulic system to bring hydraulic cylinder to up position by turning master switch on and moving gear selector handle to up position. Piston of cylinder should be bottomed.
   c. Raise gear by pushing up on retracting fitting, thus disengaging hooks, and pushing up on pivot point at bottom of side brace links to bring links out of locked position. Raise gear until fork presses lightly into rubber pad. Retain gear in this position.
   d. Loosen jam nut on piston rod of actuating cylinder and turn rod end gearing in or out to allow a slip fit of attachment bolt.
   e. Install with attachment bolt, bushing, spring swivel, and secure with washer and nut. Install gear downlock spring.
   f. When gear is to within .125 of an inch of correct adjustment, rod end need not be discon- nected and therefore all that will be required is to loosen jam nut, place a wrench on the flat at end of piston rod and turn to obtain correct adjustment.
   g. Check rod end bearing for adequate thread engagement and tighten jam nut.
   h. If downlock limit switch is properly adjusted, retract and extend gear hydro-electrically to ascertain that gear operates properly.

ALIGNMENT OF MAIN LANDING GEAR (Refer to Figure 3)

1. Place a straightedge no less than 12 feet long across front of both main landing gear wheels. Butt straightedge against tire at hub level of landing gear wheels. Jack airplane up just high enough to obtain a six and one-half inch dimension between centerline of strut piston and centerline of center pivot bolt of gear torque links. Devise a support to hold straightedge in this position.
2. Set a square against straightedge and check to see if its outstanding leg bears on front and rear side of brake disc. (It may be necessary to remove brake assembly to have clear access to disc.) If it touches both forward and rear flange, landing gear is correctly aligned. Toe-in for main landing gear wheels is 0 ± 1/2 degrees.

– NOTE –

A carpenter's square, because of its especially long legs, is recommended for checking main landing gear wheel alignment.

3. If square contacts rear side of disc, leaving a gap between it and front flange, wheel is toed-out. If a gap appears at rear flange, wheel is toed-in.

MAIN GEAR (Cont.)

4. To rectify toe-in and toe-out condition, remove bolt connecting upper and lower torque links and remove or add spacer washers to move wheel in desired direction. Refer to the Tow-in, Toe-out Correction Chart (Chart 3202).
5. Should a condition exist that all spacer washers have been removed and it is still necessary to move wheel further in or out, then it will be necessary to turn torque link assembly over. This will put link connecting point on opposite side allowing use of spacers to go in same direction.
6. Recheck wheel alignment. If alignment is correct, safety castellated nut with cotter pin.

CHART 2.
TOE-OUT CORRECTION CHART

TOE-IN TOE-OUT ANGLE	SHIM WASHERS	WASHERS UNDER HEAD	WASHERS UNDER NUT	AN 174 BOLT
0°		AN960-416	AN960-416 (3)	-14
0° 33’	AN960-416	AN960-416	AN960-416 (2)	-14
0° 48’	AN960-416L AN960-4 1 6	AN960-416	AN960-416	-14
1° 04’	AN960-416 (2)	AN960-416	AN960-416	-14
1° 19’	AN960-416L AN960-416 (2)	AN960-416L	AN960-416	-14
1° 35’	AN960-416 (3)	AN960-416	AN960-416 (2)	-15
2° 05’ Max. Allow.	AN960-416 (4)	AN960-416	AN960-416	-15

AN960-4 1 6L Washers .031 Thick

AN960-416 Washers .062 Thick

7. If a new link on top left main gear had to be installed or it had to be reversed during alignment check, it will be necessary to check gear safety switch (squat switch) bracket for engagement and locking in place. If large machine surface of link is inboard, bracket is mounted with small rivet hole next to link. (Refer to Sketch A, figure 32-3.) This hole should be aligned with centerline of link and a .096 inch hold drilled .150 inch deep. Insert an MS20426AD3-3 rivet in hole. This locking rivet is held in place by the flat washer, castellated nut and cotter pin. If link has to be reversed, then bracket and bolt are also reversed. (Refer to Sketch B, Figure 3.)
8. Check adjustment of landing gear safety switch (squat switch).

MAIN GEAR (Cont.)

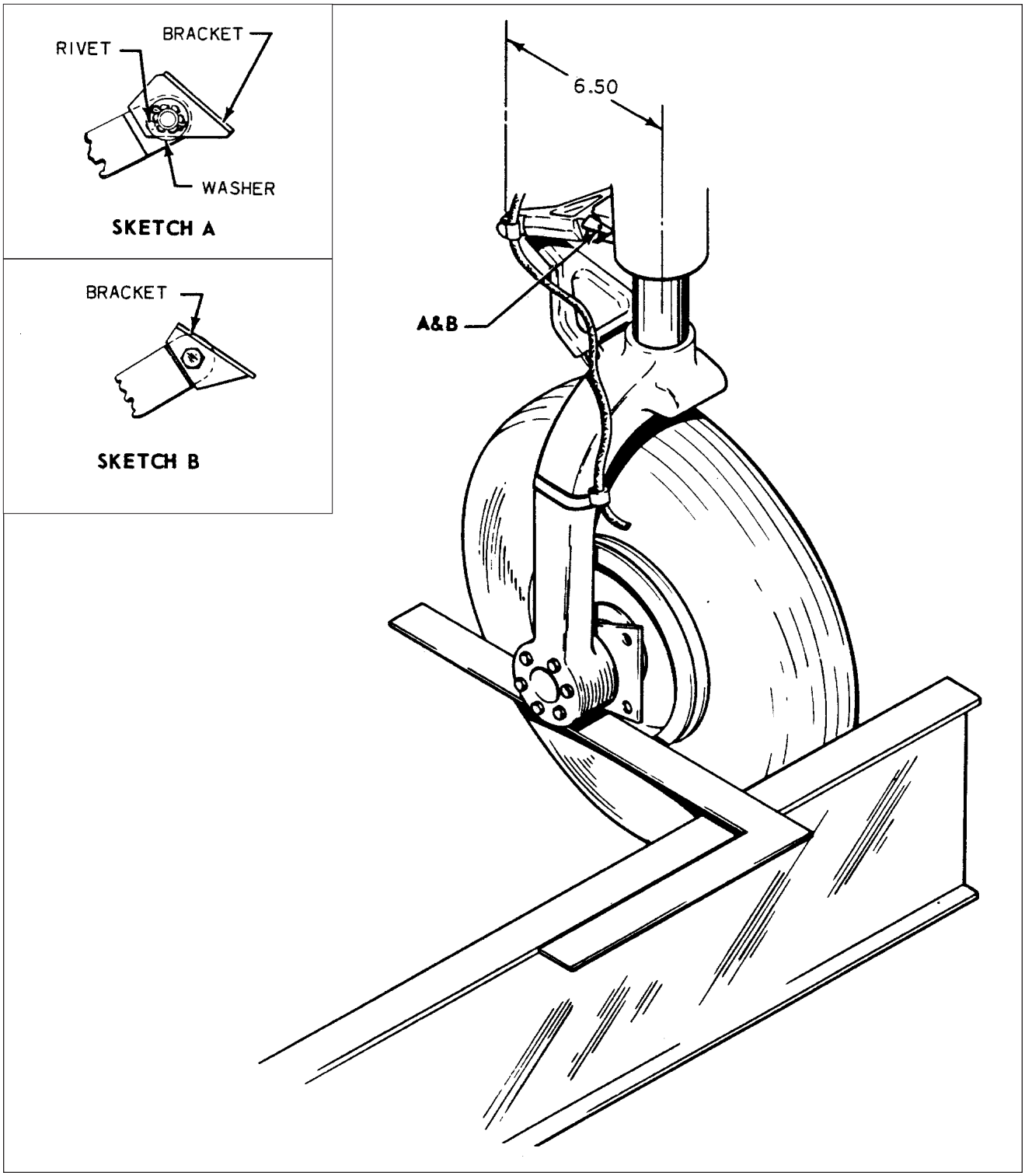

Aligning Main Gear
Figure 3

MAIN GEAR (Cont.)

MAIN GEAR DOOR ASSEMBLY

REMOVAL OF MAIN GEAR DOOR ASSEMBLY

1. With landing gear extended, disconnect door retraction rod from door by removing nut, washers, and bolt
2. Remove door from wing panel by bending door hinge pin straight and from other end pulling out pin.
3. Door retraction rod may be removed from gear housing by cutting safety wire and removing attachment bolt and washer. Note number of washers between rod end bearing and housing.

CLEANING, INSPECTION AND REPAIR OF MAIN GEAR DOOR ASSEMBLY

1. Clean door and retraction rod with a suitable cleaning solvent.
2. Inspect door for cracks or damage, loose or damaged hinges and brackets.
3. Inspect door retraction rod and end bearing for damage and corrosion.
4. Repairs to a door may be replacement of hinge, repair of fiberglass and painting.

INSTALLATION OF MAIN GEAR DOOR ASSEMBLY

1. Install door by positioning hinge halves of door and wing, and inserting hinge pin. It is recom- mended a new pin be used. Bend end of pin to secure in place.
2. Install door retraction rod by positioning rod at its attachment points at door and strut housing. At door attachment, thin washers are inserted at each side of rod end bearing and it is secured with bolt, washer and nut. At strut housing, place washers between rod end bearing and housing not to exceed .12 of an inch to obtain proper clearance and secure with bolt. Safety bolt with MS20995C41 wire.
3. Check that all around clearance between door and wing skin is not less than .032 of an inch.

MAIN GEAR (Cont.)

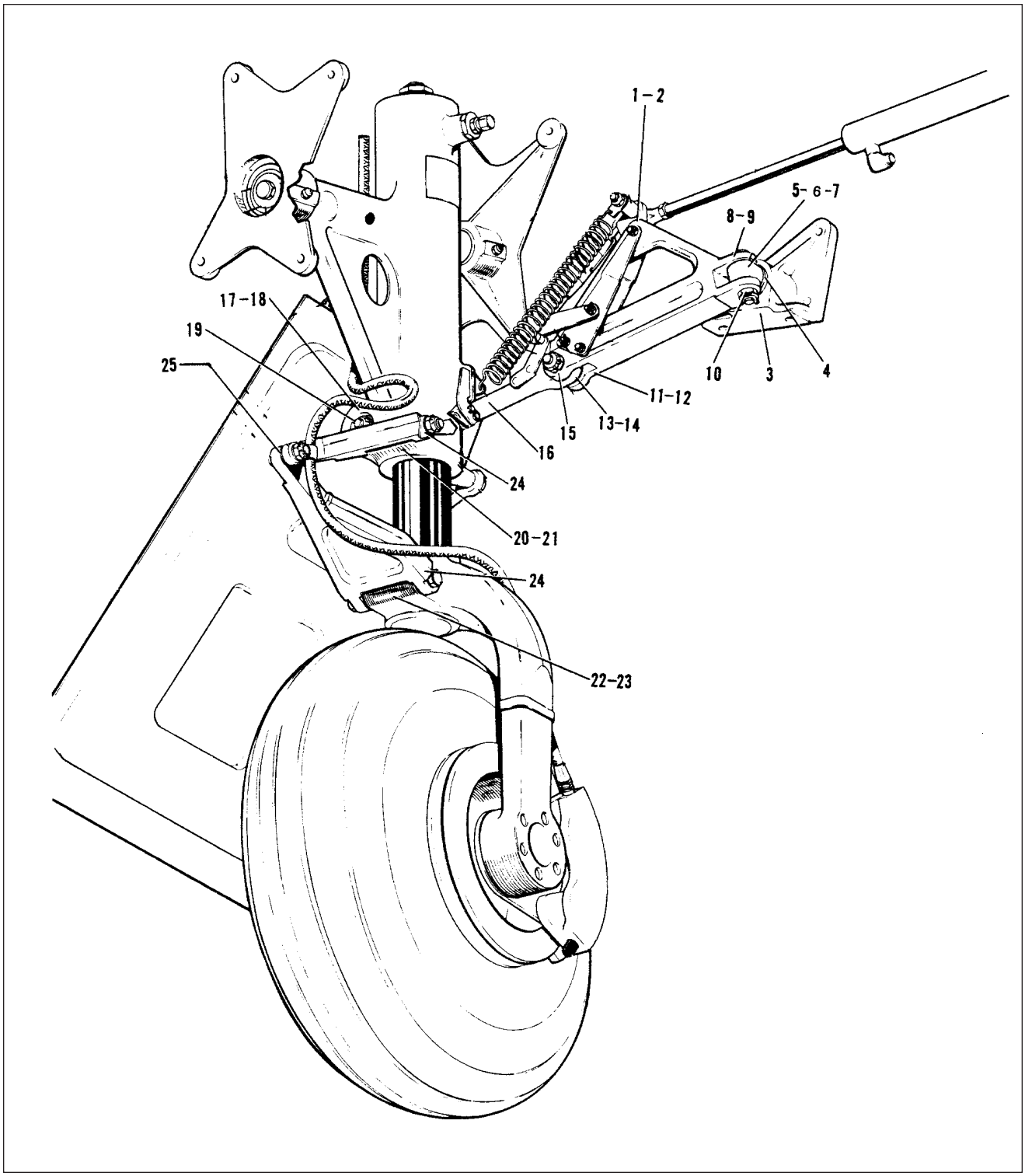

Reference For Main Gear Tolerances
Figure 4

MAIN GEAR (Cont.)

CHART 3
MAIN GEAR SERVICE TOLERANCES (Sheet 1 of 2)

Fig. No. 4 Item No.	Part No.	Nomenclature	Ma nufacturers Dimension	Service Dimension	Service Tolerance	Remarks
1.	67025-2	Link, Upper Side Brace	.3645 .3625			No Rotation
2,	63900-89	Upper Side 8race Link Bushing	.249 .251	.248 .252	.004	SEE NOTES 1 AND 4
3.	95643-8 95643-9	Side Brace Support Bracket	.7465 .7470			
4.	67026-12	Support Bracket Bushing	.624 .625	.624 .626	.002	SEE NOTE 3
5.	78717-2	Side Brace Support Stud	OD .6235 .6225	OD .6220		
6.	78717-2	Side Brace Support Stud	.4365 .4385	.4355 .4395	.004	
7.	67025-2	Link . Upper Side Brace	4945 .4935	.4925		
8.	14843-16	Side Brace Link Bushing	.376 .375	.374		SEE NOTES 1 AND 4
9.	400 761 AN26-25	Link/Stud Attaching Bolt	OD.373+0 -.002	OD.373+0 -.004	.004	
10.	67025-2	Upper Side Link Brace	.4945 .4935	.4925		
11.	14843-16	Side Brace Link Bushing	.3745 .3755	.374		SEE NOTES 1
12..	67797-04 67797-05	Link, Lower Side Brace	.4925 .4905	.500		
13.	65003-44	Lower Side Brace Link Bushing	.373	.372	.004	SEE NOTES 1 AND 4
14.	402 927 NAS-464-6-1 6	Side Brace Link Assembly Bolt	OD .3742+.00 -.0005	.3740		
15.	452 368 (HEX-86)	Rod End, Lower Side Brace Link	50+.0015 -.0005	.50+.0030 -.0005	.0035	
	16. 67926-05	67926-04 Side Brace Attachment	Trunnion Housing .7550	.7530 .	. 7550	7530
17.	67026-05	Trunnion Bushing	.499 . .500	498 .502	.004	SEE NOTE 2
18.	402 960 AS-464-P8A-44	Trunnion Side Brace Attachment Bolt	OD.4991+.00 -.0009	.4972		
19.	67926-04 67926-05	Trunnion Housing Torque Link Attachment	.4410 .4430	.4410 .4440		
20.	67026-07	Trunnion Bearing	.313 .31 4	.315		SEE NOTE 1,2 AND 4

MAIN GEAR (Cont.)

CHART 3
MAIN GEAR SERVICE TOLERANCES (Sheet 2 of 2)

Fig. No. 4 Item No.	Part No.	Nomenclature	Ma nufacturers Dimension	Service Dimension	Service Tolerance	Remarks
21.	67037-06	Strut Assembly .4370	.4385 . .4370	.4395	.0025	
22.	67026-07	Strut Bearing	.313 .31 4 .	.313 31 5	.002	SEE NOTES 1 AND 4
23.	67012-00	Torque Link	.312+.001 -.0	.312+.002 -.0		
24.	67012-00	Torque Link	.3760 . .3745 .	3770 3745	.0025	
25.	31796-00	Torque Link Bushing	.252 .251	.253 .251	.002	SEE NOTES 1 AND 4

—NOTES—

1. LINE REAM TO THIS DIMENSION AFTER INSTALLATION OF NEW PART.
2. INSTALL BEARING WITH WET ZINC CHROMATE ON ADJACENT SURFACES OF BEARING AND CASTING.
3. INSTALL USING LOCTITE 601. ROTATE PART WHILE INSERTING, IF POSSIBLE, TO INSURE COMPLETE COVERAGE.
4. PRESS FIT.

GRIDS 3B20AND 3B21
PAGES 32-27 AND 32-28
INTENTIONALLY LEFT BLANK

NOSE GEAR

NOSE GEAR OLEO

DISASSEMBLY OF NOSE GEAR OLEO (Refer to Figure 5)

Nose gear oleo assembly may be removed and disassembled from gear oleo housing with gear removed from or installed on the airplane.

1. Place airplane on jacks. (Refer to Jacking, Chapter 7.)
2. Place a drip pan under nose gear to catch spillage.
3. Remove air and fluid from oleo strut. Depress air valve core pin until strut chamber pressure has diminished; remove filler plug and with a small hose siphon as much hydraulic fluid from strut as possible.
4. To remove complete cylinder and fork assembly from oleo housing, cut safety wire at top of unit and remove cap bolts that attach steering arm and aligner guide bracket to top of oleo cylinder.
5. Disconnect shimmy dampener by removing each cotter pin, nut, washer and bolt that connects dampener to oleo cylinder and housing.
6. Release and remove snap ring and washer(s), if installed, at top of housing, and pull complete cylinder and fork assembly from bottom of housing.
7. To remove piston tube and fork from cylinder, first separate upper and lower torque links by removing link connecting bolt assembly and then separate two links. Note spacer washer between two links.
8. Compress piston tube; reach up along tube and release snap ring from annular slot at bottom of oleo housing.
9. Pull piston tube with component parts from cylinder.
10. Piston tube components may be removed by reaching in tube and pushing out upper bearing retainer pins. Slide from tube, upper bearing, lower bearing with outer and inner O-rings, wiper strip, washer and snap ring.
11. To remove orifice tube, remove large locknut and lock washer from top of cylinder. Pull tube from cylinder.
12. Orifice plate is removed from bottom of orifice tube by releasing snap ring that holds plate in position.
13. To remove piston tube plug with o-ring located in lower end of tube, remove bolt assembly and insert a rod up through hole in body of fork. Push plug out through top of tube.

CLEANING, INSPECTION AND REPAIR OF NOSE GEAR OLEO

1. Clean all parts with a suitable dry type cleaning solvent.
2. Inspect landing gear oleo assembly component for the following:
   a. Bearings and bushings for excess wear, corrosion, scratches and overall damage.
   b. Retaining pins for wear and damage.
   c. Lock rings for cracks, burrs, etc.
   d. Cylinder and orifice tube for corrosion, scratches, nicks and excess wear.
   e. Upper and lower cylinder bushings loose or turning in cylinder.
   f .Orifice plate for hole restriction.
   g. Fork tube for corrosion, scratches, nicks, dents and misalignment.
   h. Air valve general condition.
3. Repair of oleo is limited to smoothing out minor scratches, nicks and dents and replacement of parts.

NOSE GEAR (Cont.)

ASSEMBLY OF NOSE GEAR OLEO (Refer to Figure 5)

1. Ascertain that parts are cleaned and inspected.
2. To install piston tube plug, first lubricate tube plug and O-ring with hydraulic fluid (MIL-H5606A) and install o-ring on plug. Lubricate inside wall of tube, insert plug into top of tube and push it to fork end. Align bolt holes of fork, tube and plug, and install bolt assembly.
3. If desired, cement a cork in hole in bottom of fork body to prevent dirt from entering between fork and tube.
4. To assemble components of orifice tube, insert orifice plate into bottom of tube,with countersunk side of orifice hole exposed. Secure plate with snap ring, lubricate and install o-ring on upper end of tube.
5. Insert orifice tube up through bottom of cylinder. With tube exposed through top of cylinder, install lock washer and insert roll pins through lock washer into piston. Install tube locknut finger tight at this time.
6. Fork and tube assembly may be assembled by installing tube components on tube. In order, slide onto tube, snap ring, washer, lower bearing with outer and inner o-rings and upper bearing. Align lock pin holes in upper bearing with pin holes in piston tube and install pins.
7. Lubricate inner wall of cylinder with hydraulic fluid. Carefully insert piston tube assembly into bottom of cylinder, allowing orifice tube to guide itself into fork tube, until snap ring can be in- stalled in annular slot at bottom of cylinder. Install wiper strip, slide washer into piston and secure assembly with snap ring.
8. At top of cylinder, tighten (torque) orifice tube locknut.
9. Ascertain that bushings are installed in upper and lower torque links and then install both links. Torque link bolt assemblies should be lubricated and installed with flat of bolt head hex adjacent to milled stop on wide end of link. Tighten bolts only tight enough to allow no side play in link, yet be free enough to rotate.
10. Install cylinder into oleo housing, position spacer washer(s) over top of cylinder and secure with snap ring. Install spacer washers as required to obtain .0 to .015 of an inch thrust of cylinder within housing.
11. At top of oleo housing, install on cylinder aligner guide bracket and steering arm. Install cap bolts, tighten 20 to 25 inch-pounds torque and safety with MS20995C40 wire.
12. Install shimmy dampener and safety.
13. Lubricate gear assembly. (Refer to Lubrication Chart, Chapter 12.)
14. Compress and extend strut several times to ascertain that strut will operate freely. Weight of gear wheel and fork should allow strut to extend.
15. Service oleo strut with fluid and air. (Refer to Oleo Struts, Chapter 12.)
16. Check nose gear for alignment (refer to Alignment of Nose Landing Gear) and gear operation.

NOSE GEAR (Cont.)

1. CAP BOLTS AND WASHERS
2. SAFETY WIRE
3. SUPPORT FITTING
4. BUSHING, SUPPORT FITTING
5. BUSHING
6. BOLT, WASHERS, NUT AND COTTER PIN
7. BOLT, WASHERS, NUT AND COTTER PIN
8. AXLE
9. CAP BOLT
10. BUSHING, ROLLER
11. ARM, STEERING
12. BRACKET ALIGNER
13. CAP, AIR VALVE
14. CORE, AIR VALVE
15. BODY, AIR VALVE
16. NUT, ORIFICE TUBE
17. SNAP RING
18. ROLL PIN
19. WASHER, STOP
20. DELETED
21. HOUSING, STRUT
22. DELETED
23. OLEO CYLINDER
24. LINK, UPPER TORQUE
25. BOLT, WASHER, BUSHINGS, NUT AND COTTER PIN
26. LINK, LOWER TORQUE
27. PIN, BEARING RETAINING
28. O-RING
29. BEARING, UPPER TUBE
30. TUBE, ORIFICE
31. PLATE, ORIFICE
32. SNAP RING
33. O-RING
34. BEARING, LOWER TUBE
35. O-RING
36. WIPER STRIP
37. WASHER
38. SNAP RING
39. TUBE, PISTON
40. PISTON TUBE PLUG
41. O-RING
42. FORK
43. WASHER

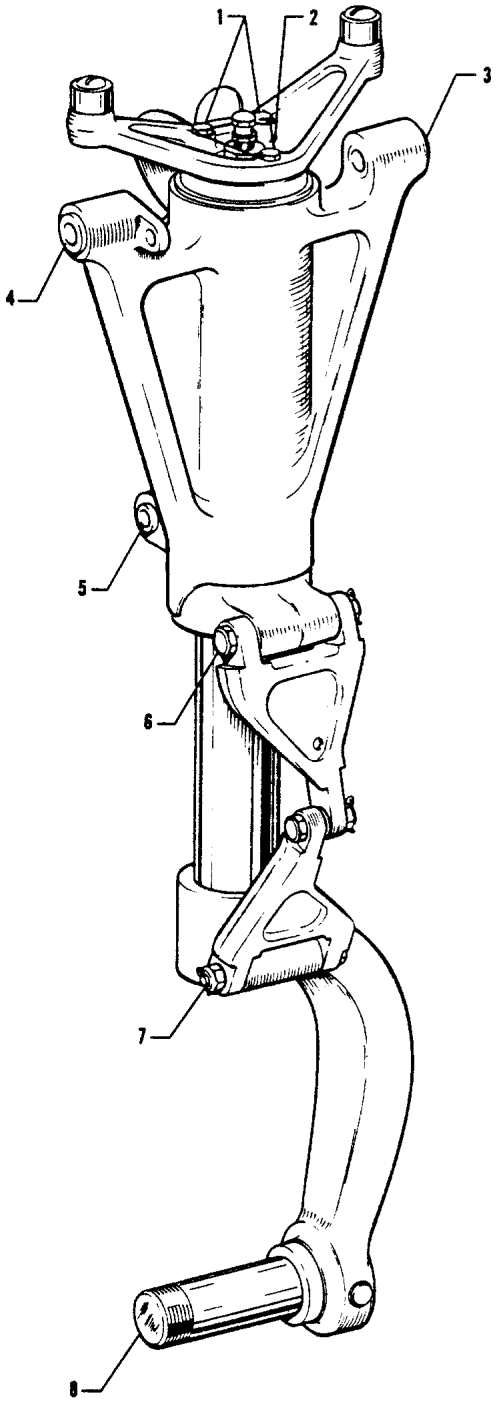

Nose Gear Oleo Strut Assembly
Figure 5 (Sheet 1 of 2)

NOSE GEAR (Cont.)

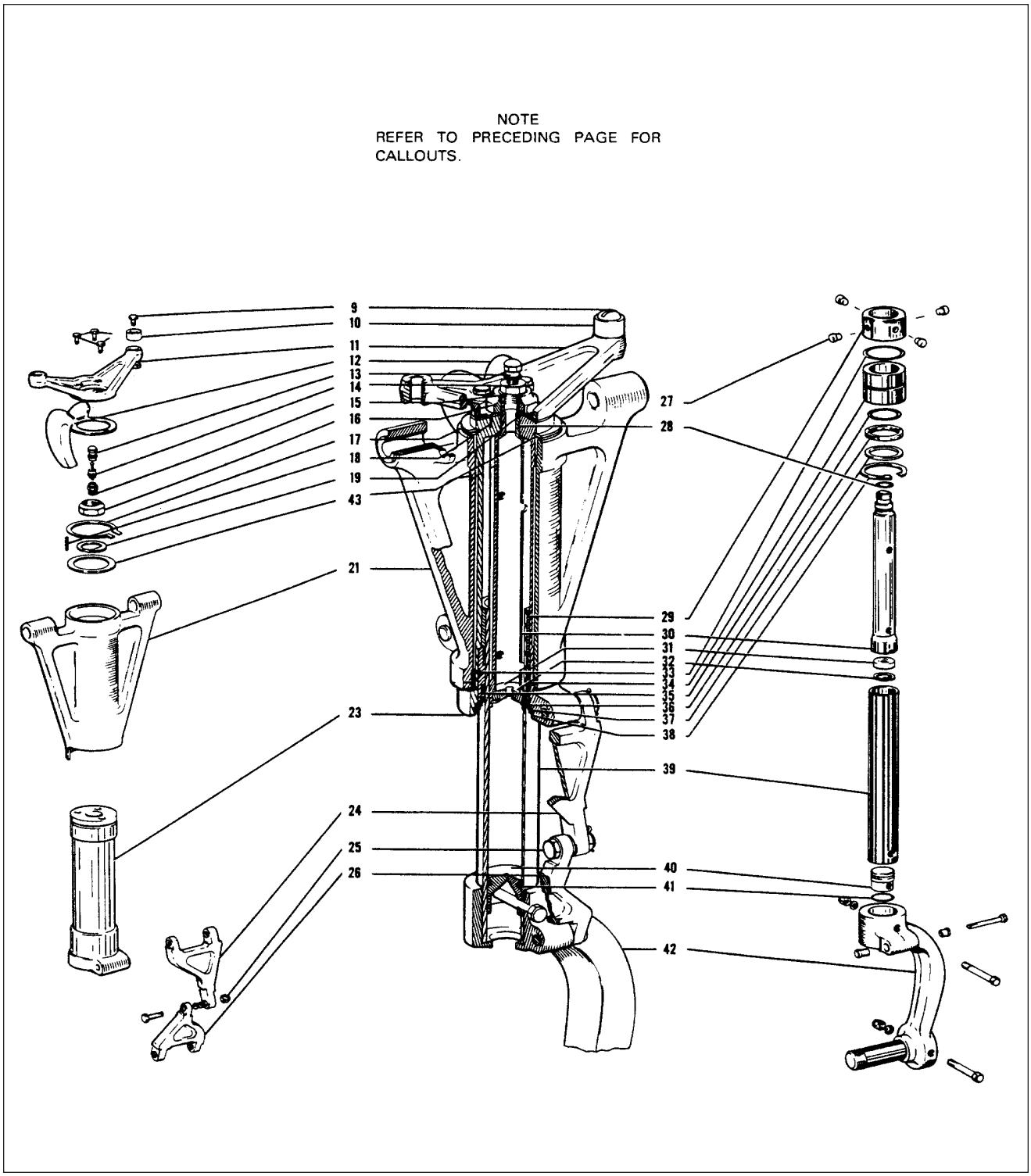

Nose Gear Oleo Strut Assembly
Figure 5 (Sheet 2 of 2)

NOSE GEAR (Cont.)

NOSE LANDING GEAR ASSEMBLY

REMOVAL OF NOSE LANDING GEAR (Refer to Figure 6)

1. Remove PA-32R-301 engine cowling by the following procedure:
   a. Release cowl fasteners, two on each side and two at top aft of cowl.
   b. Lift aft end of cowl and then slide it forward to release two stud type front fasteners. Remove top cowl.
   c. Disconnect landing light lead at quick disconnect at right rear side of bottom cowl.
   d. Remove induction air filter access door, filter and four bolts which hold air box to cowl.
   e. Remove screws securing bottom cowl at its aft end and fuselage firewall flange.
   f. Remove screws which support bottom cowl to nose gear doors support brackets, and fuselage firewall flange.
   g. Push nose gear doors inward against spring pressure and remove bottom cowl.
2. Remove PA-32R-301T engine cowling by the following procedure:
   a. Release fasteners from each side of the cowl.
   b. Release stud fasteners from cowl center and lift top cowl free of aircraft.
   c. Disconnect landing light lead at quick disconnect.
   d. Remove screws from nose cowl, firewall and nose gear door frame, loosen wing nuts from air filter assembly and remove lower cowl from aircraft.
3. Place airplane on jacks. (Refer to Jacking, Chapter 7.)
4. Disconnect gear tension springs from forward spring arm that is attached to right side of strut housing.
5. Retract nose gear slightly to remove gear from its downlocked position.
6. To remove upper and lower drag links, the following procedure may be used:
   a. Disconnect rod end of hydraulic cylinder from downlock hook by removing nut and bolt that connect these two units. This will require manually unlocking nose gear to allow clearance from engine mount.

– CAUTION –

Whenever aircraft is placed on jacks for the purpose of manually retracting nose gear assembly, insure nose gear downlock is fully disengaged before releasing nose gear drag links. Damage could occur to downlock if not disengaged fully.

   b. Retract gear and disconnect gear downlock spring from upper drag link.
   c. Remove cotter pins, washers and nuts from bolts that secure upper drag link and lower drag link.
   d. Remove lower and upper gear tension spring arms.
   e. Slide attachment bolts from upper and lower drag links and remove links.
7. With lower drag link disconnected from gear oleo housing, housing may be removed by removing cotter pins, nuts, washers, and bolts at attachment points on each side of housing at engine mount.
8. Steering bellcrank may be removed by removing nut and bolt at steering rod, and nut and bolt with bushing at bellcrank pivot point.

NOSE GEAR (Cont.)

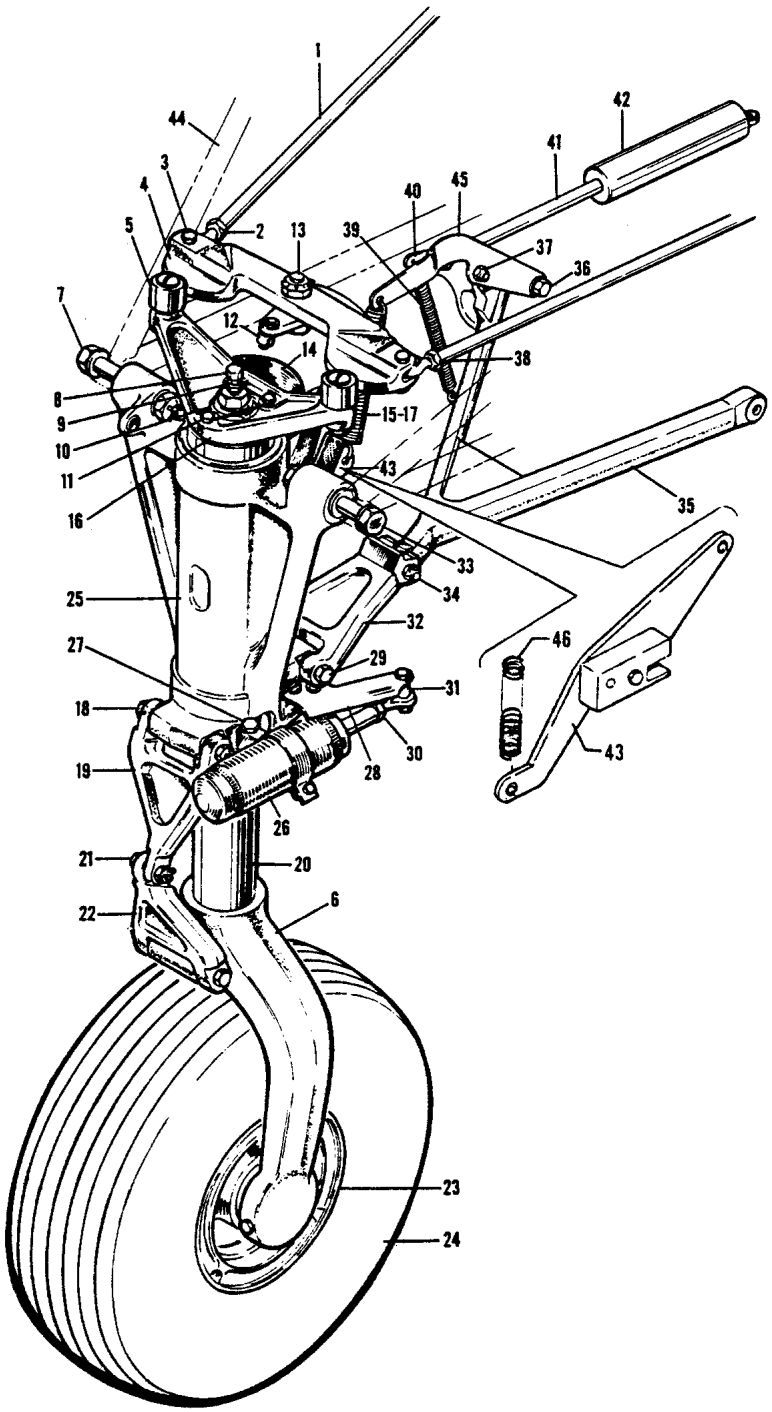

1. ROD, STEERING
2. JAM NUT
3. BOLT AND NUT ASSEMBLY
4. STEERING BELLCRANK
5. BUSHING, STEERING ARM
6. FORK
7. BOLT, WASHER, NUT AND COTTER PIN
8. CAP, AIR VALVE
9. BODY, AIR VALVE
10. SAFETY WIRE
11. CAP BOLT AND WASHER
12. ROLLER, ALIGNER GUIDE
13. BOLT, WASHER, NUT AND COTTER PIN
14. BRACKET, ALIGNER
15. SPRING, INNER
16. ARM, STEERING
17. SPRING OUTER
18. BOLT, WASHER, NUT AND COTTER PIN
19. LINK, UPPER
20. ROD, PISTON
21. BOLT, WASHER, NUT AND COTTER PIN
22. LINK, LOWER
23. WHEEL
24. TIRE
25. HOUSING, STRUT
26. SHIMMY DAMPENER
27. BOLT, WASHER, NUT AND COTTER PIN
28. BRACKET, SHIMMY DAMPENER
29. BOLT, WASHER, NUT AND COTTER PIN
30. JAM NUT
31. ROD END BEARING
32. DRAG LINK, LOWER
33. BOLT, WASHER, NUT AND COTTER PIN
34. BOLT, WASHER, NUT AND COTTER PIN
35. DRAG LINK, UPPER
36. BOLT AND NUT ASSEMBLY
37. BOLT, WASHER AND NUT
38. JAM NUT
39. SPRING, DOWNLOCK
40. HOOK, DOWNLOCK
41. ROD, ACTUATOR
42. CYLINDER, HYDRAULIC
43. ARM, SPRING
44. ENGINE MOUNT
45. ARM, SPRING
46. SPRING

Nose Gear Installation
Figure 6

NOSE GEAR (Cont.)

CLEANING, INSPECTION AND REPAIR OF NOSE LANDING GEAR

1. Clean all parts with a suitable dry type cleaning solvent.
2. Inspect gear components for following unfavorable conditions:
   a. Bolts, bearings and bushings for excess wear, corrosion and damage.
   b. Gear housing, drag links, torque links, and tension spring arm for cracks, bends or misalignment.
   c. Downlock hook for excess wear of the hook and bearing surfaces.
   d. Downlock pin to insure no looseness is present.
3. Inspect gear tension and downlock hook springs for the following:
   a. Excess wear or corrosion, especially around hook portion of springs. A spring should be rejected if wear or corrosion exceeds one-quarter diameter of spring. Clean away all corrosion and repaint.
   b. Check gear tension springs for load tensions below minimum allowable tolerances. Minimum allowable tension of inner spring is 37 pounds pull at 13.75 inches and outer is 60 pounds pull at 13.75 inches. Measurement is taken from inner side of each hook. If it is found that either spring should be rejected, replace both springs.
   c. Check gear downlock hook spring for load tension below minimum allowable tolerance. Minimum tension of spring is 10.5 pounds pull at 4.5 inches. Measurement is also taken from inner side of each hook.
4. Check general condition of each limit switch and its actuator, and wiring for fraying, poor connections or conditions that may lead to failures.
5. Check drag link through center travel by attaching upper and lower drag links, and ascertaining that when stop surfaces of two links touch, linkage is not less than .062 nor more than .250 of an inch through center. Should distance exceed required through center travel and bolt and bushing are tight, replace one or both drag links.
6. Shimmy dampener requires no service other than routine inspection. In case of damage or malfunction, dampener should be replaced rather than repaired.
7. Repair to landing gear is limited to reconditioning of parts such as replacing bearings and bushings, smoothing out minor nicks and scratches, repainting of areas where paint has chipped or peeled and replacement of parts.

INSTALLATION OF NOSE LANDING GEAR (Refer to Figure 6)

– NOTE –

When assembling any units of landing gear, lubricate bearings, bushings, and friction surfaces with proper lubricant as described in Chapter 12.

1. Attach steering bellcrank with bushing to its mounting plate on engine mount and connect steering rods. Secure each with bolt and nut. Adjustment, fore and aft, of bellcrank may be made after gear has been installed and rigged and adjusted.
2. To install gear housing assembly, position the gear so that bolt attachment points on housing align with attachment points on engine mount. Install pivot bolts, washers and nuts. Tighten nuts to a snug fit, yet allowing gear to swing free, and safety.
3. Drag links and gear tension spring arms may be installed by following procedure:

NOSE GEAR (Cont.)

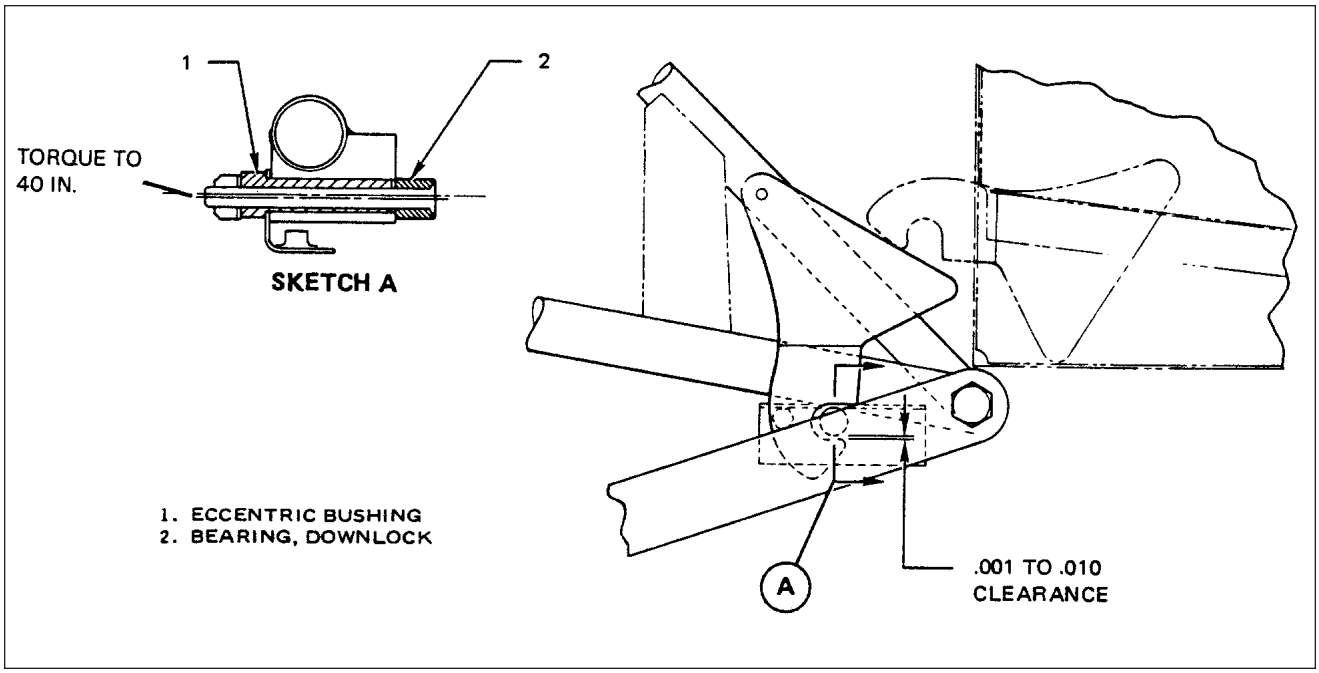

Adjustment of Eccentric Bushing
Figure 7

a. Ascertain that the upper and lower links are assembled with downlock hook attached, and through travel of links checked according to Cleaning, Inspection and Repair of Nose Landing Gear.
b. Position link assembly to allow bolt holes in links to align with holes in gear housing and engine mount.
c. Add upper gear tension spring arm, bushings and washers on upper link attachment bolt.
d. Install bolt and tighten nut to allow link to rotate freely and safety.
e. Install lower gear tension spring arm on drag link bolt on right side of gear oleo housing, secure and safety. A washer is installed on bolt between lower drag link and arm.

4. Connect gear downlock spring between downlock and upper drag link.
5. Connect two gear tension springs.
6. Adjust eccentric bushing (used for downlock pin) with gear extended and downlock engaged to obtain .001 to .010 clearance between bottom of downlock pin (bearing) and downlock hook (Refer to Figure 7).
7. Retract gear and tighten with eccentric bushing in its adjusted position. Cycle gear a minimum of three times to ensure proper operation and engagement.
8. Ascertain that landing gear is lubricated per Lubrication Chart, Chapter 12.
9. Check adjustment of gear per Adjustment of Nose Landing Gear.
10. Install engine cowling.

NOSE GEAR (Cont.)

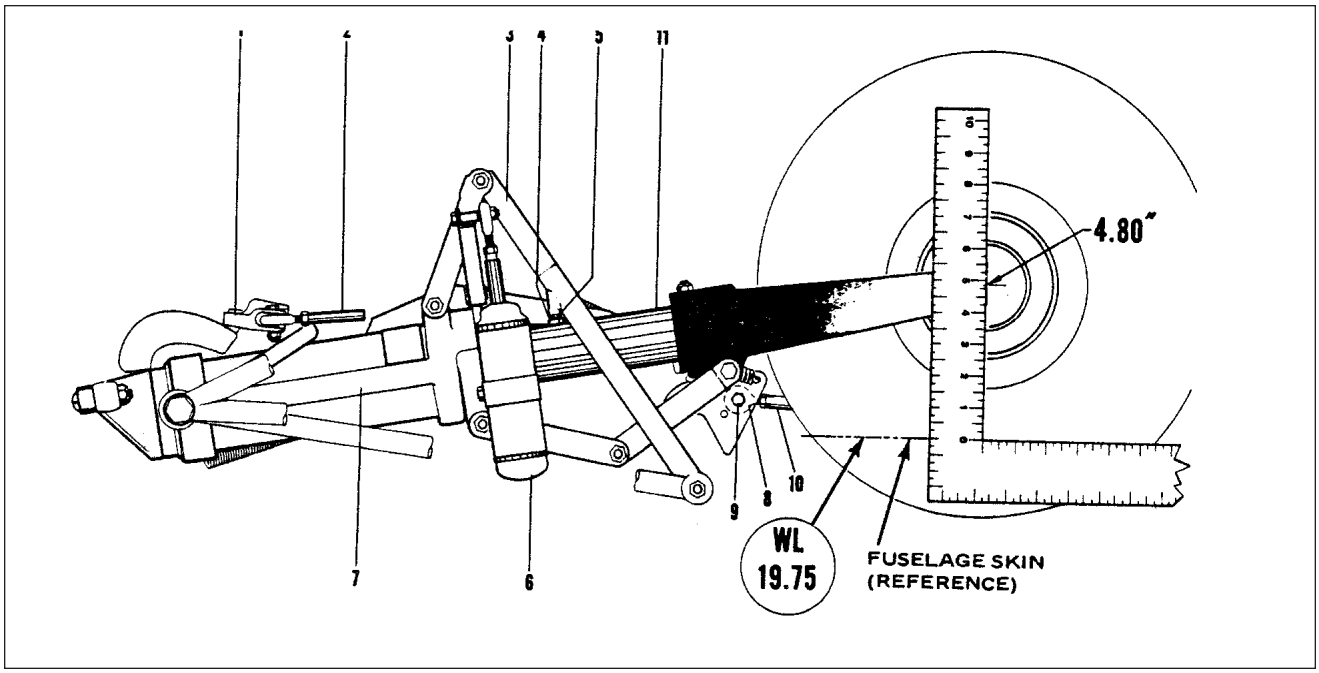

Nose Gear Adjustment
Figure 8

11. Retract landing gear and check door operation as per Adjustment of Nose Gear Doors.
12. Check alignment of nose gear per Alignment of Nose Landing Gear.
13. Remove airplane from jacks.

ADJUSTMENT OF NOSE LANDING GEAR (Refer to Figure 8**)**

The gear up stop is located on under side of upper drag link.

1. Remove engine cowl.
2. Place airplane on jacks. (Refer to Jacking, Chapter 7.)
3. Retract landing gear hydraulically by turning master switch on, raising emergency gear extension lever and moving gear selector handle to up position. Retain emergency extension lever in UP Override position.
4. Check adjustment of gear up stop by placing a carpenters square with longest end along bottom of fuselage, and shortest end running up through centerline of wheel axle. Measure up along square from bottom of fuselage 4.80 inches, to determine if center of wheel axle meets this measure- ment. If this measurement is incorrect, extend gear, loosen jam nut on gear up stop, and make required adjustment by turning stop.
5. Adjust rod end of nose gear retracting cylinder so that at least 0.07 to 0.10 rod travel remains to full extension when downlock is fully engaged. Check rod end safeety hole and tighten safety nut.
6. Recheck all adjustments and retighten jam nut on gear up stop. When gear is fully retracted, strut tube should be firmly against gear up stop. Extend gear.

NOSE GEAR (Cont.)

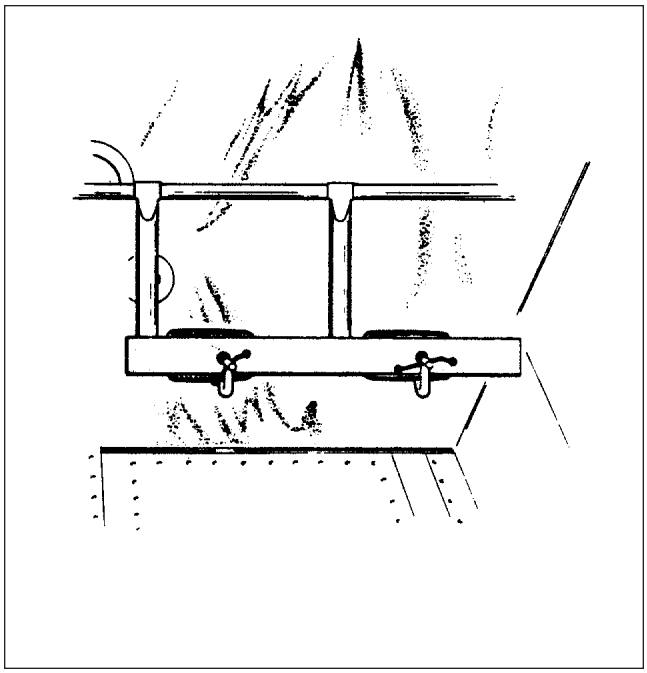

Clamping RudderPedals in Neutral Position
Figure 9

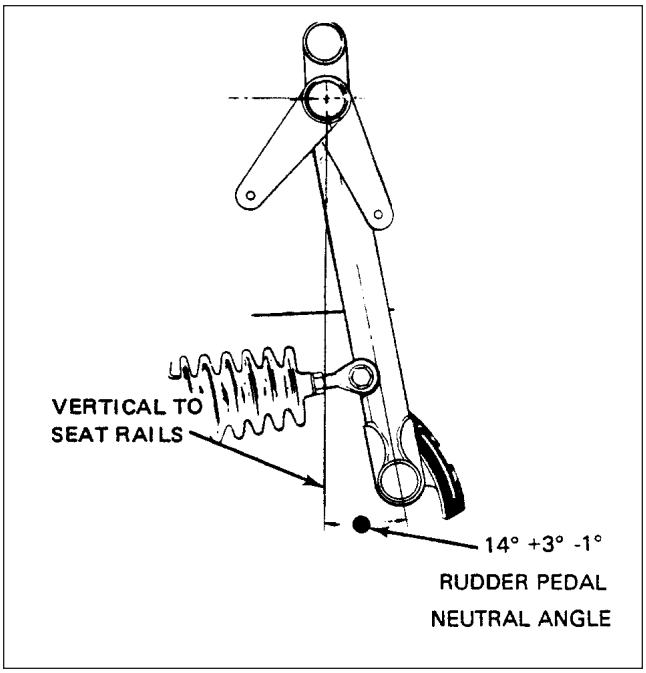

Rudder Pedals at Neutral Angle
Figure 10

7. Adjust shimmy dampener by turning nose wheel against stops and adjusting rod end of dampener for adequate travel to both extremes.
8. Install engine cowling.
9. Remove airplane from jacks.

ALIGNMENT OF NOSE LANDING GEAR

1. Place airplane on a smooth level floor that will accommodate striking of a chalk line.
2. Ascertain that nose gear is properly adjusted as given in Adjustment of Nose Landing Gear.
3. With landing gear in down-locked position, weight proportionally on nose gear and nose wheel facing forward, adjust steering bellcrank. Bellcrank is attached to lower front of engine mount directly aft of gear housing and may be adjusted by loosening its attachment bolt and sliding bell- crank fore and aft until it clears each steering arm rollers by 0.03 of an inch. Retighten attachment bolt.
4. Place airplane on jacks. (Refer to Jacking, Chapter 7.)
5. Level airplane laterally and longitudinally. (Refer to Leveling, Chapter 8.)
6. From center point of tail skid, extend a plumb bob and mark contact point on floor.
7. Extend a chalk line from mark on floor below tail skid to a point approximately three feet forward of nose wheel. Allow line to pass under wheel at centerline of tire. Snap chalk line.
8. Clamp rudder pedals to align them in a lateral position. Ascertain that rudder pedals are in their neutral position. (Refer to Figure 9 and Figure 10)
9. Adjust rod end bearings of each steering control rod to align nose wheel with chalk line and to bring rudder pedals into neutral angle fore and aft.

NOSE GEAR (Cont.)

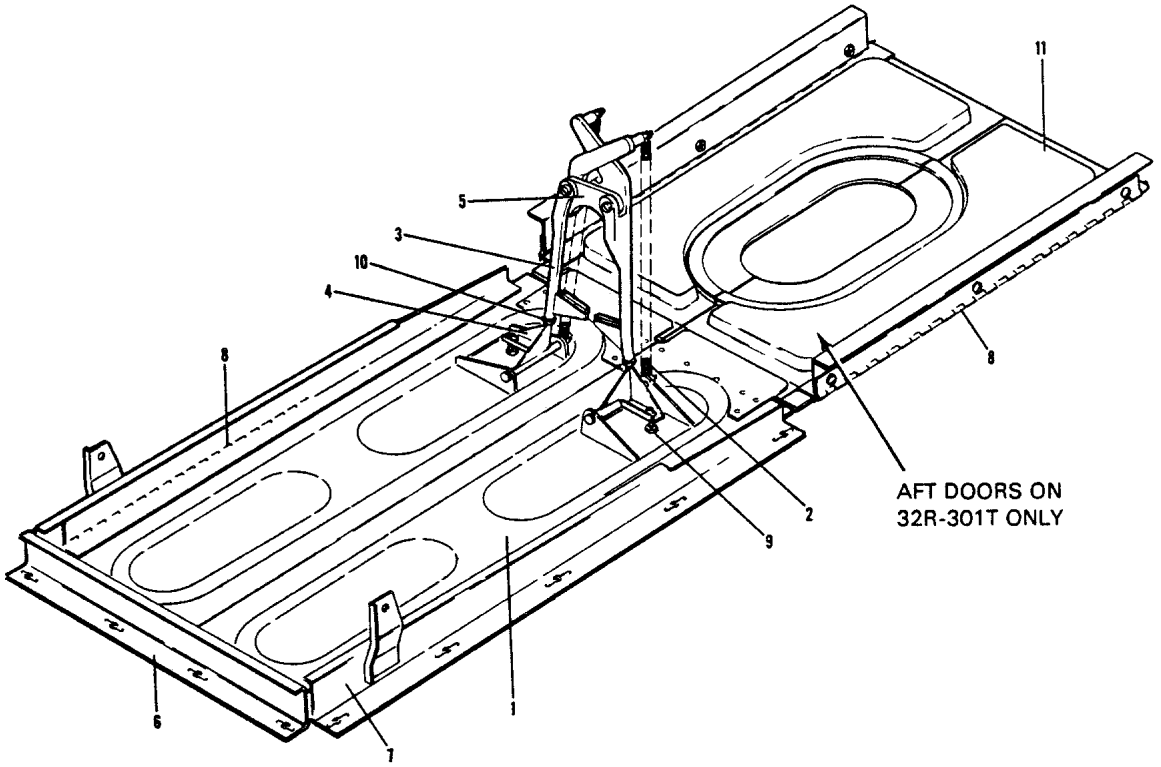

Nose Gear Doors
Figure 11

10. Install steering push rods on rudder pedals. Adjust rods so lengths are both same and rudder pedals are at their neutral position.
11. To align nose wheel straight forward, stand in front of nose gear and align center rib of tire with chalk line, or lay a straightedge along side of tire and parallel straightedge with chalk line.
12. Place a bubble protractor against a rudder pedal steering tube to check the neutral angle. (Refer to Figure 10.)
13. One end of each rod must be disconnected and jam nuts loosened to make any adjustment. Do not attempt to make adjustment by means of one rod end bearing, but divide adjustment between bearings at each end of each rod. Check that rod ends have sufficient thread engagement by ascertaining that a wire will not go through check hole in rod. Where no check holes are provided, ascertain a minimum of 3/8 inch thread engagement. Reinstall rods and tighten jam nuts.
14. To check nose gear steering for its 22.5 ± 2 maximum right and left travel, mark on each side of nose wheel an angle line from centerline and wheel pivot point. Turn wheel to its maximum travel in both directions to check for allowable travel. Should travel be exceeded in one direction and not enough in other direction, check for possible damage to gear fork or torque links.

NOSE GEAR (Cont.)

NOSE GEAR DOOR ASSEMBLY

REMOVAL OF NOSE GEAR DOOR ASSEMBLY (Refer to Figure 11)

1. With nose gear extended, disconnect spring from door arms by removing upper attachment hardware.
2. Disconnect link assemblies from doors and remove mechanism.
3. To remove doors from cowl, bend end of hinge pin straight and pull out pin.

CLEANING, INSPECTION AND REPAIR OF NOSE GEAR DOOR ASSEMBLY

1. Clean all parts with a suitable cleaning solvent.
2. Inspect doors for damage, loose or damaged hinges and brackets.
3. Inspect door retraction link assemblies and arms for damage and wear.
4. Check door tension springs for wear and tension. Reject springs if tension does not maintain doors in full open position.
5. Repairs to doors may be replacement of hinges and painting.
6. Repairs to retraction mechanism is limited to replacement of parts, and sanding and painting.

INSTALLATION OF NOSE GEAR DOOR ASSEMBLY (Refer to Figure 11)

1. Install gear doors by positioning hinge valves of door and door support assembly, and inserting hinge pins. It is recommended a new pin be used. Bend ends of pins to secure in place.

2.Assemble door mechanism to doors and attach springs.

ADJUSTMENT OF NOSE GEAR DOORS

1.Place airplane on jacks. (Refer to Jacking, Chapter 7.)
2. Adjust door retraction links to align doors with lower cowl in closed position.
3. Door down adjustment bolts should be positioned to limit doors travel to 90 degrees from closed position.
4. Check attaching hardware and jam nuts for safety and tightness.
5. Remove airplane from jacks.

NOSE GEAR (Cont.)

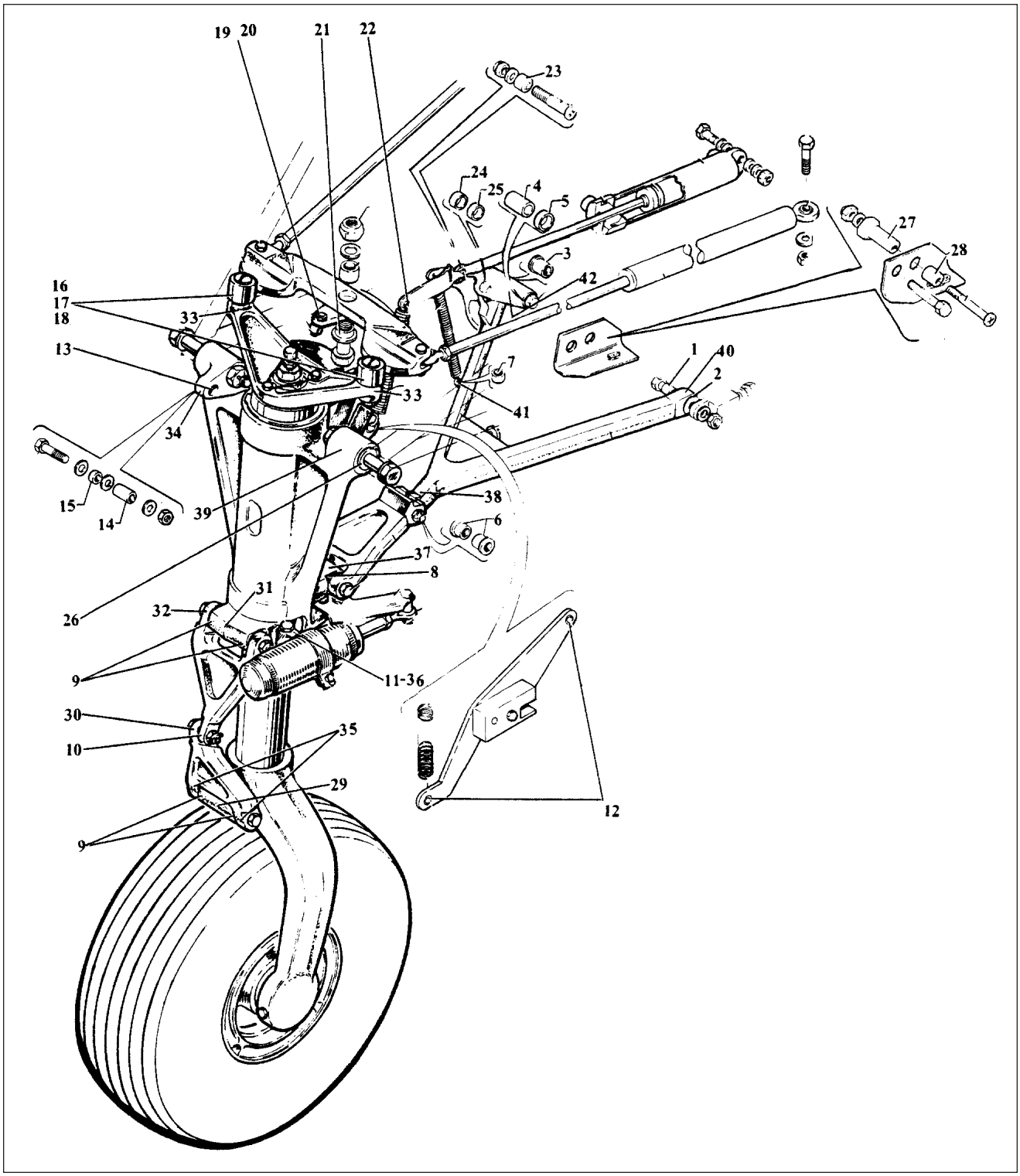

Nose Gear Tolerances
Figure 12

NOSE GEAR (Cont.)

CHART 3
NOSE GEAR SERVICE TOLERANCES (Sheet 1 of 3)

Fig. No. 12 Item No.	Part No.	Nomenclature	Ma nufacturers Dimension	Service Dimension	Service Tolerance	Remarks
1.	65003-45	Upper Draglink Bushing	.4385 .4375	.4395 .4375	002	
2.	452 474	Upper Drag Brace Bearing L.H.	.4385 .4375	.4395 .4375	.002	
3.	452 623	Uppet Drag Brace Bearing R.H.	.502 .501	.503 .501	.002	
4.	95061-133	Bushing	.376 .375	.376 .377	.002	
5.	95061-134	Bushing	.645 .640	.640 .647	.002	
6.	452 450	Upper Drag Brace Bearing	.2505 .2495	.2515 .2495	.002	
7.	61402-93	Upper Drag Brace Bushing	.189 .191	.193 .189	.004	
8.	67026-07	Draglink Trunnion Bearing	.313 .314	.3130 .3165	.0025	SEE NOTE 1
9.	67026-07	Bearing	.313 .314	.313 .315	.002	SEE NOTES 2, 3, AND 4
10.	452 366	Link Assembly Bearing	.2495 .2505	.2495 .2515	.002	SEE NOTE 2 AND 3
11.	21831-04	Nose Gear Strut Tube Bearing	.247 .248	.247 .250	.003	SEE NOTE 2
12.	82732-99	Nose Gear Arm Bushing	.241 .246	.241 .251	.010	
13.	95061-144	Trunnion Assembly Bushing	.248 .250	.249 .259	.010	SEE NOTE 1
14.	95061-168	Bushing	.250			
15.	82732-95	Bushing	.249 .251	.253 .245	.008	
16.	63900-122	Nose Gear Outer 8ushing	.443 .441	.443 .4445	.0015	
17	452 477	Sleeve Bearing	.375	.395 .375	.020	
18	63900-109	Nose Gear Inner Bushing	.3125 .3180	.3235 .3125	.011	
19.	14976-15	Bushing	.385 .390	.385 .395	.010	
20.	14976-1 6	Bushing	.260 .265	.270 .260	.010	

NOSE GEAR (Cont.)

CHART 3
NOSE GEAR SERVICE TOLERANCES (Sheet 2 of 3)

Fig. No. 12 Item No.	Part No.	Nomenclature	Ma nufacturers Dimension	Service Dimension	Service Tolerance	Remarks
21.	452 445	Steering Cam Bearing	.502	.512 .502	.020	
22	82732-99	Nose Gear Arm Bushing	.241 .246	.241 .251	.010	SEE NOTE 3
23.	65003-30	Downlock Bushing	.193 .195	.196 .193	.003	
24.	96061-1 35	Bushing	.2495 .2505	.2515 .2495	.002	
25.	95061-136		.2495 .2505	.2515 .2495	.002	
26.	67026-11	Bearing				SEE NOTE 1
27.	35662-2	Eccentric Bushing	.189 .191			
28.	38068-2	Downlock Bearing	.191 .189			
29.	67050-2	Lower Strut Assy. Torque Link Fitting				
30.	20735-5	Torque Link	.377 .3785	.377 .3790	.002	SEE NOTE 3
31.	67148-00	Trunnion Torque Link Fitting	.4385 .4370	.4385 .4370	.0015	
32.	20735-5	Torque Link	.312 .31 3	.312 .314	.002	
33.	44386-03	Steering Arm	.4370 .4385	.0015	.0015	
34.	67054-03	Trunnion Assy. Assist Spring Fitting	.302 .303	.302 .3035	.0015	
35.	20735-05	Torque Link	.312 .31 3	.312 .314	.002	SEE NOTE 4
36.	67148-00	Shimmy Dampener Fitting	.3745 .3760	.3745 .3760	.001	
37.	67054-03	Trunnion Housing Drag Link Attachment	.4415 .4425	.4415 .4424	.0010	
38.	38043-0	Upper Drag Link	.378 .379	.3775 .3795	.002	
39.	67054-03	Trunnion Assy. Main Attachment Fitting	.6285 .6295	.6285 .6295	.001	
40.	38043-0	Upper Drag Link	.4385 .4375	.4385 .4405	.002	

NOSE GEAR (Cont.)

CHART 3
NOSE GEAR SERVICE TOLERANCES (Sheet 3 of 3)

Fig. No. 12 Item No.	Part No.	Nomenclature	Ma nufacturers Dimension	Service Dimension	Service Tolerance	Remarks
41.	38043-0	Downlock Spring Attachment Fitting	.247 .248			
42.	38043-0	Upper Drag Link	.6235 .6245	.6230 .6250	.002	

– NOTES –

1. INSTALL NEW BUSHING 8Y COATING O.D. OF BUSHING WITH LOCTITE 601, ROTATING BUSHING WHILE INSERTING IT TO INSURE COVERAG E.
2. INSTALL BUSHING WITH WET ZINC CHROMATE.
3. PRESS FIT
4. LINE REAM TO THIS DIMENSION AFTER INSTALLATION OF PART.

INTENTIONALLY LEFT BLANK

INTENTIONALLY LEFT BLANK

EXTENSION AND RETRACTION

A. Nose Gear Actuating Cylinder

(1) Removal of Nose Gear Actuating Cylinder.

(a) Place airplane on jacks. (Refer to Jacking, Chapter 7.)
(b) Disconnect hydraulic lines from actuating cylinder. Cover open line ends to prevent contamination.
(c) Disconnect cylinder operating rod end. Manually unlock nose gear to allow clearance from engine mount for removal of attachment bolt.

– CAUTION –

Whenever aircraft is placed on jacks for purpose of manually retracting nose gear assembly, ensure nose gear downlock is fully disengaged before releasing nose gear drag links. Damage could occur to downlock if not fully disengaged.

(d) Disconnect aft end of cylinder from its attachment fitting. Remove cylinder from the wheel well.

(2) Disassembly of Nose Gear Actuating Cylinder (Refer to Figure 13.)

(a) With cylinder removed from airplane, mark position of end gland to facilitate reinstallation.
(b) Remove safety wire and unscrew end gland.
(c) Remove piston and O-rings .

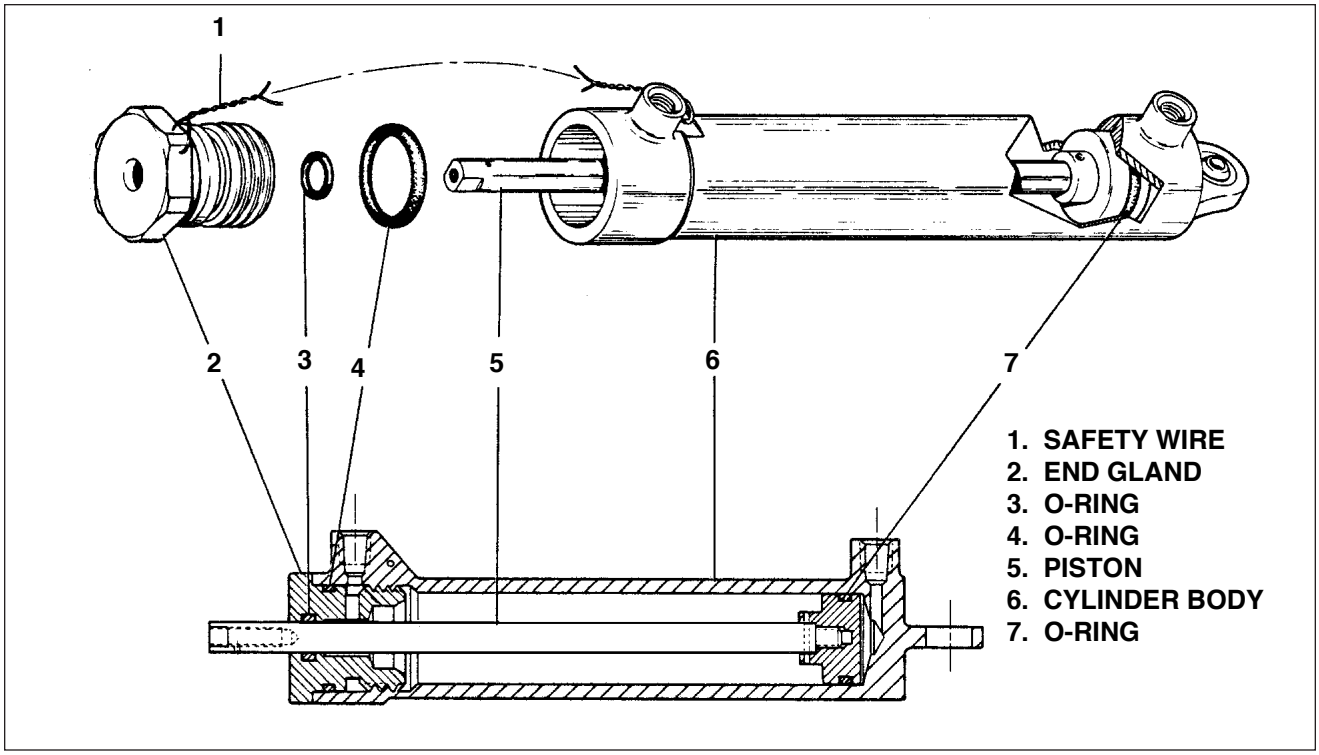

Nose Gear Actuating Cylinder
Figure 13

EXTENSION AND RETRACTION (Cont.)

A. Nose Gear Actuating Cylinder (cont.)

(3) Cleaning, Inspection, and Repair of Nose Gear Actuating Cylinder
   (a) Clean cylinder parts with a suitable dry type solvent. Dry thoroughly.
   (b) Inspect cylinder assembly for the following:
      1 Interior walls of cylinder and exterior surfaces of piston for scratches, burrs, corrosion, etc.
      2 Threaded areas for damage.
      3 Rod end fitting and swivel fitting of cylinder for wear and corrosion.
   (c) Repairs to cylinder are limited to polishing out small scratches, burrs, etc., and replacing parts.

(4) Assembly of Nose Gear Actuating Cylinder (Refer to Figure 13)
   (a) Install O-ring on the exterior of end gland.
   (b) Install O-ring in the interior of end gland.
   (c) Install O-ring on the body of piston assembly.
   (d) Lubricate areas around O-rings with hydraulic fluid. Slide end gland on piston rod. Screw end gland in cylinder body.
   (e) Align reference marks and secure end gland with safety wire.
   (f) Check smoothness of piston operation.

(5) Installation of Nose Gear Actuating Cylinder
   (a) Attach cylinder to its attachment fitting using bolt and nut.
   (b) Attach operating rod end to downlock. Manually unlock nose gear to provide necessary clearance from engine mount for installing attaching bolt.
   (c) Connect hydraulic lines to cylinder fittings.
   (d) Check adjustment of cylinder rod end. (Refer to Adjustment of Nose Landing Gear.)
   (e) Operate pump to purge system of air. Check fluid level in reservoir.
   (f) Remove the airplane from jacks.

B. Main Gear Actuating Cylinder

(1) Removal of Main Gear Actuating Cylinder
   (a) Place airplane on jacks. (Refer to Jacking, Chapter 7.)
   (b) Disconnect hydraulic lines from actuating cylinder. Cover open line ends to prevent contamination.
   (c) Disconnect gear downlock spring from swivel fitting at upper end of spring.
   (d) Remove downlock spring swivel fitting. Disconnect cylinder operating rod end from upper side brace retraction fitting by removing attaching nut, washer and bolt.
   (e) Disconnect cylinder from its attachment by removing nut and bolt.
   (f) Remove cylinder from wheel well.

EXTENSION AND RETRACTION (Cont.)

B. Main Gear Actuating Cylinder (cont.)

(2) Disssembly of Main Gear Actuating Cylinder (Refer to Figures 14and 15)

(a) With cylinder removed from airplane, push piston rod (by hand) toward clevis to remove oil from unit.

(b) Put clevis only in a soft jaw vise and clamp against clevis bearing.

(c) If no pipe fitting is installed in port of end gland, install a fitting (1/8-27) into port. This fitting will be used for leverage only and need not be tight.

(d) Rotate gland counterclockwise (with use of fitting) until end of gland lock ring shows in slot in cylinder body. Reverse rotation of gland (clockwise direction) to allow lock ring to move out of the slot. (Refer to Figure 15) It may be necessary to give ring an assist to start out of slot. If so, insert a strong wire pick or other available tool in slot to lift up end of ring and then rotate gland.

(e) Pull piston and end gland from cylinder.

(f) Remove O-rings as desired.

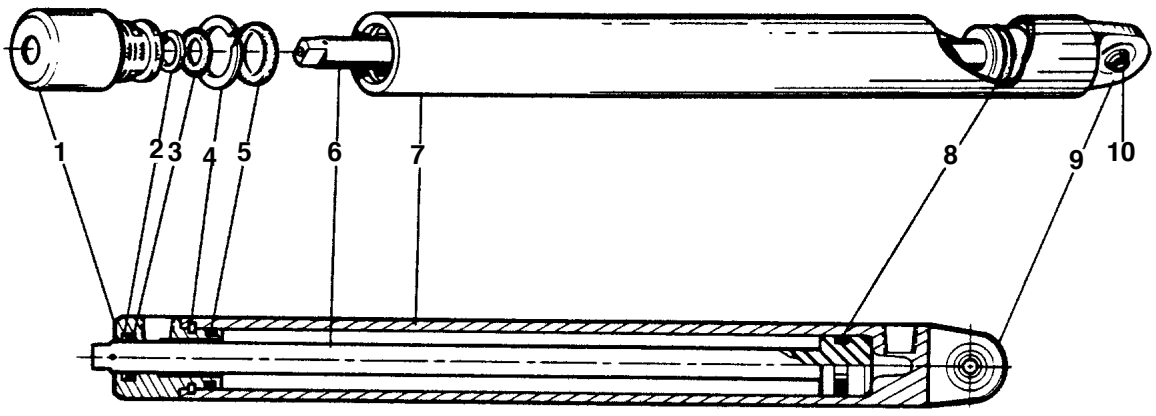

1.	END GLAND	6.	PISTON
2.	BACK-UP RING	7.	CYLINDER BODY
3.	O-RING	8.	O-RING
4.	RETAINER RING	9.	CLEVIS
5.	O-RING	10.	BEARING

Main Gear Actuating Cylinder
Figure 14

(3) Cleaning, Inspection and Repair of Main Gear Actuating Cylinder

(a) Clean cylinder parts with a suitable dry type solvent and dry thoroughly.

(b) Inspect cylinder assembly for following:

1 Interior walls of cylinder and exterior surfaces of piston for scratches, burrs, corrosion, etc.

EXTENSION AND RETRACTION (Cont.)

B. Main Gear Actuating Cylinder (cont.)

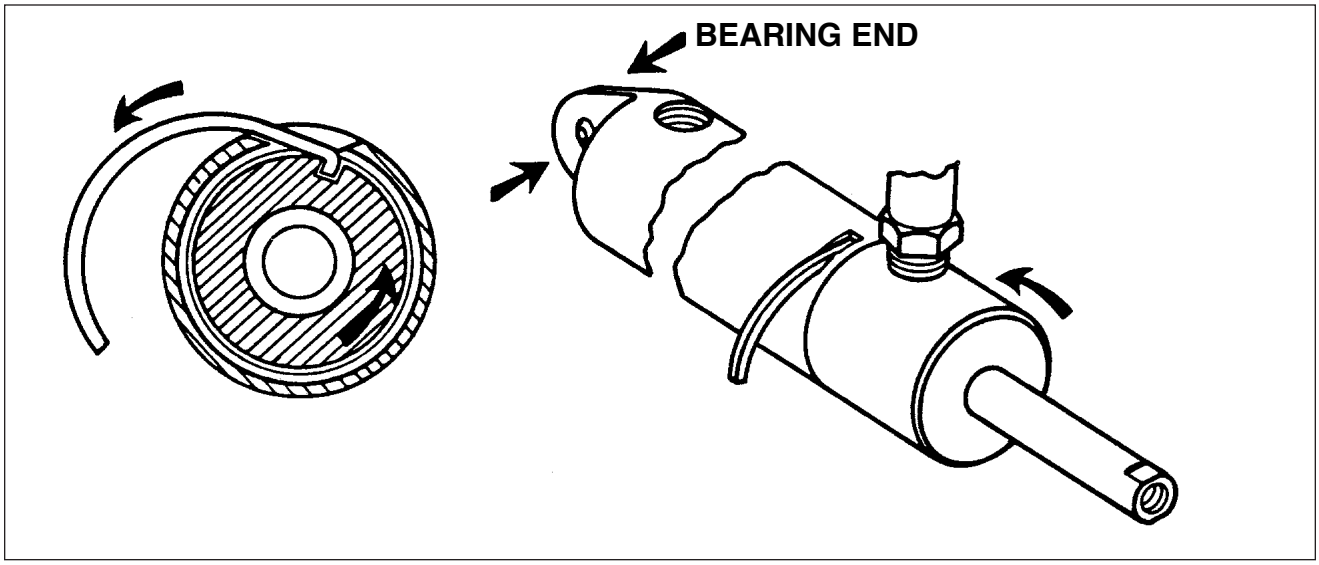

Main Gear End Gland Locking Device
Figure 15

(3) Cleaning, Inspection and Repair of Main Gear Actuating Cylinder (cont.)
   2 Threaded areas for damage.
   3 End fitting retainer slot for excess wear.
   4 Rod end fitting and swivel fitting of cylinder for wear and corrosion.
   (c) Repairs to cylinder are limited to polishing out small scratches, burrs, etc., and replacing components. (Refer to Parts Catalog for replacement part numbers.)

(4) Assembly of Main Gear Actuating Cylinder (Refer to Figure 14).
   (a) Install O-ring on exterior of end gland.
   (b) Install O-ring and back-up ring in the interior of end gland.
   (c) Install O-ring on the body of piston assembly.
   (d) Lubricate areas around O-rings with hydraulic fluid, park-o-lube or vaseline. Slide end gland on piston rod. Slide piston into the cylinder housing.
   (e) Insert hook end of a new lock ring (P/ N 755 997) in slot in cylinder body and slot in end gland. Rotate gland counterclockwise to completely wrap lock ring into assembly.
   (f) Align port in end gland and cylinder body.
   (g) Check smoothness of piston operation. Static pressure test unit to check for possible cut O-rings.

EXTENSION AND RETRACTION (Cont.)

B. Main Gear Actuating Cylinder (cont.)

(5) Instllation of Main Gear Actuating Cylinder

(a) Attach the cylinder to its attachment fitting in the wheel well using bolt and nut.

(b) Attach the operating rod end and downlock spring swivel fitting to the upper side brace retraction fitting by using bolt, washer and nut. Ascertain swivel fitting is free to rotate.

(c) Connect the downlock spring to the swivel fitting.

(d) Check the adjustment of the cylinder rod end. (Refer to Adjustment of Main Landing Gear),

(e) Operate pump to purge system of air and check fluid level in reservoir.

(f) Remove the airplane from jacks.

– END –

INTENTIONALLY LEFT BLANK

WHEELS AND BRAKES

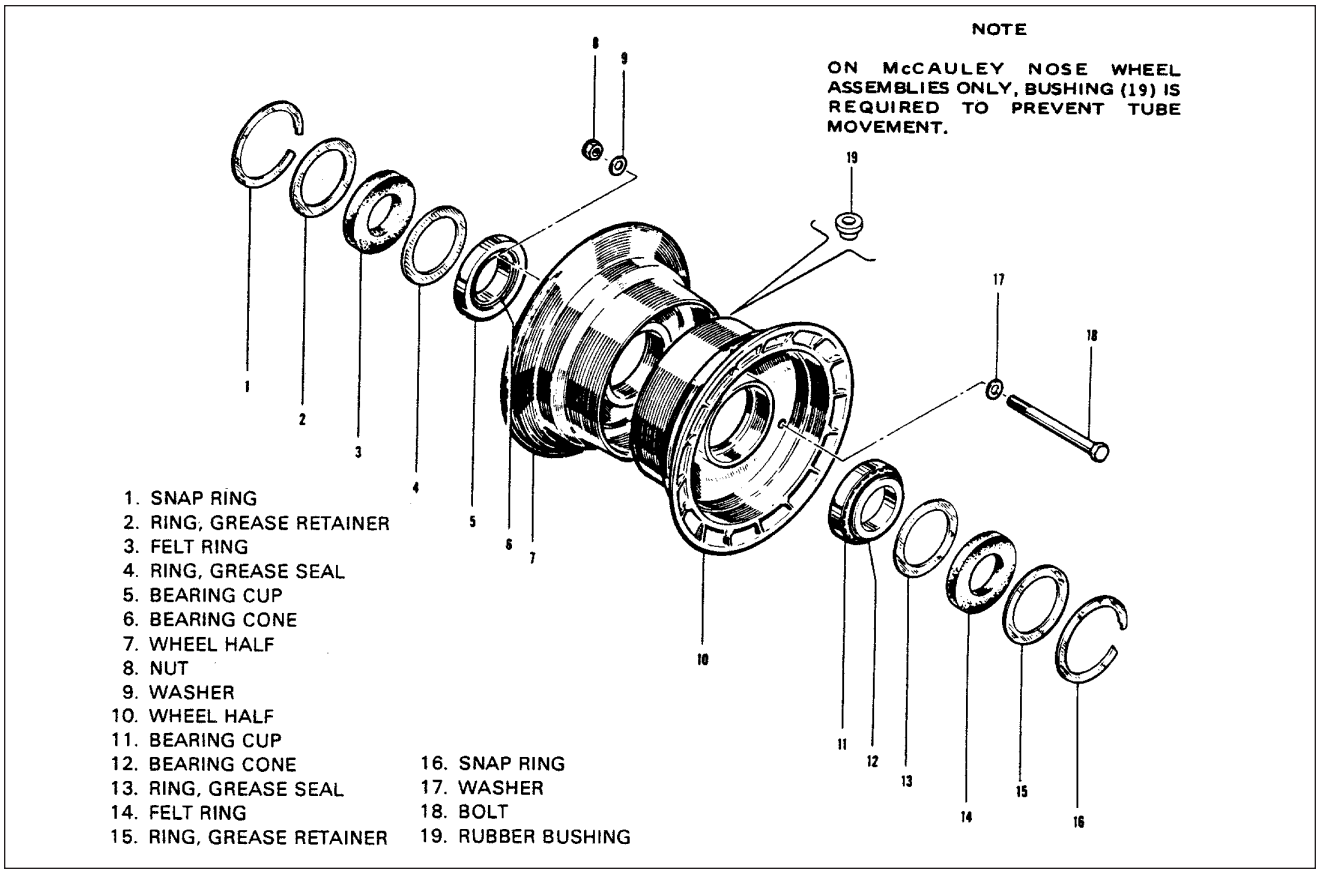

Nose Wheel Assembly
Figure 16

NOSE WHEEL ASSEMBLY

REMOVAL AND DISASSEMBLY OF NOSE WHEEL (Refer to Figure 16)

1. Jack airplane enough to raise nose wheel clear of ground. (Refer to Jacking, Chapter 7.)
2. To remove nose wheel, first remove cotter pin and washer that secures safety clevis pin of wheel nut. Next remove clevis pin, wheel nut and then slide wheel from axle.
3. Wheel halves may be separated by first deflating tire. With tire sufficiently deflated, remove wheel through bolts. Pull wheel halves from tire by removing wheel half opposite valve stem first and then other half.
4. Wheel bearing assemblies may be removed from each wheel half by first removing snap rings that secure grease seal retainers, and then retainers, grease seals and bearing cones. Bearing cups should be removed by tapping out evenly from inside.

WHEELS AND BRAKES (Cont.)

INSPECTION OF NOSE WHEEL ASSEMBLY

1. Visually check all parts for cracks, distortion, defects and excess wear.
2. Check tie bolts for looseness or failure.
3. Check internal diameter of felt grease seals. Replace felt grease seal if surface is hard or gritty.
4. Check tire for cuts, internal bruises and deterioration.
5. Check bearing cones and cups for wear and pitting and relubricate.
6. Replace any wheel casting having visible cracks.

ASSEMBLY AND INSTALLATION OF NOSE WHEEL (Refer to Figure 16)

1. Ascertain that bearing cup for each wheel is properly installed. Install tire with tube on wheel halfwith valve stem hole and then join two wheel halves. Install through bolts with washers andnuts to valve stem side

– NOTE –

On aircraft models which use Cleveland Wheel Assembly torque nuts to 90 inch-pounds. Those aircraft models which use McCauley Wheel Assembly torque nuts to 140-150 inch-pounds.

– NOTE –

On McCauley Nose Wheel Assemblies only, bushing is required to prevent tube movement.

2. Lubricate bearing cones and install cones, grease seals, felt rings and seal retainer rings. Securewith snap rings.
3. Slide wheel on axle and secure with retainer nut. Tighten nut to allow no side play, yet allow wheelto rotate freely. Safety nut with clevis pin and secure pin with washer and cotter pin.

MAIN WHEEL ASSEMBLY

REMOVAL AND DISASSEMBLY OF MAIN WHEEL (Refer to Figure 17)

1. Place airplane on jacks. (Refer to Jacking, Chapter 7.)
2. To remove main wheel, remove cap bolts that join brake cylinder housing and lining back plateassemblies. Remove back plate from between brake disc and wheel.
3. Remove dust cover, cotter pin and flat head pin that safeties wheel nut, and slide wheel fromaxle.
4. Wheel halves may be separated by first deflating tire. With tire sufficiently deflated, removewheel through bolts. Pull wheel halves from tire by removing inner half from tire first, andthen outer half.
5. Wheel bearing assemblies may be removed from each wheel half by first removing retainer snaprings that secure grease seal retainers, and then retainers, grease seals and bearing cone. Bearingcups should not be removed only for replacement. See Repair of Nose and Main Wheel Assembliesfor bearing cup replacement instructions.

WHEELS AND BRAKES (Cont.)

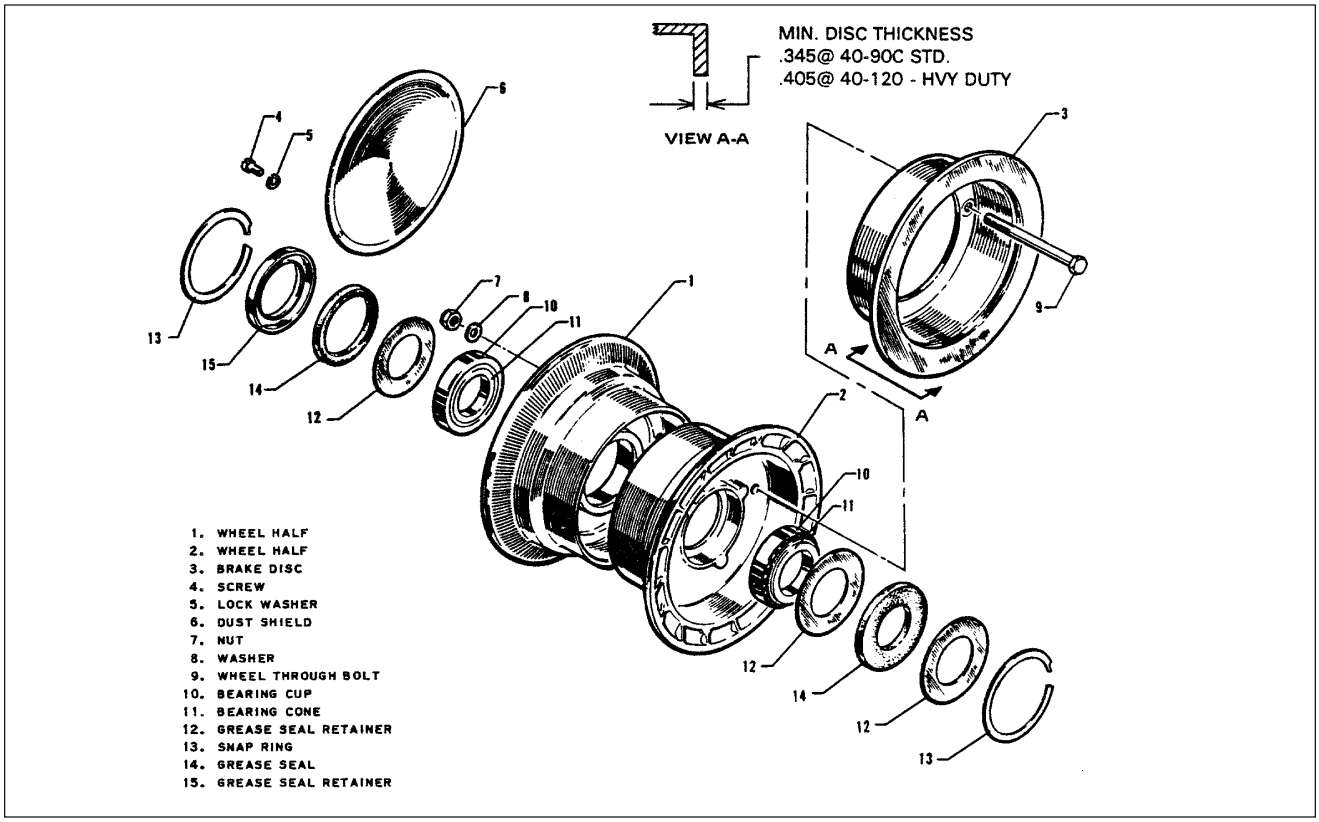

Main Wheel Assembly
Figure 17

INSPECTION OF MAIN WHEEL ASSEMBLY

Inspect brake disc for cracks, excessive wear or scoring, rust, corrosion and warpage. Remove rust and blend out nicks, using fine 400 grit sandpaper. Replace disc if cracked or when disc is worn below minimum thickness. (Refer to Cleaning, Inspection and Repair of Wheel Brake Assembly.) In addition also perform same inspection for nose wheel in Inspection of Nose Wheel Assembly.

ASSEMBLY AND INSTALLATION OF MAIN WHEEL (Refer to Figure 17)

1. Ascertain that bearing cup for each wheel is properly installed. Install tire with tube and wheelhalf with valve stem hole. Ascertain that index mark is aligned with index mark on tire to insureproper tire, tube and wheel balance. Join two wheel halves and position brake disc in inner wheelhalf. Install through bolts with nuts on valve stem side. Torque wheel nuts to 150 inch-pounds andinflate tire.
2. Lubricate bearing cones and install cones, grease seals and seal retainer rings. Secure retainer withsnap ring.
3. Slide wheel on axle and secure with retainer nut. Tighten nut to allow no side play, yet allowwheel to rotate freely. Safety nut with a flat head pin, washer and cotter pin. Reinstall dust cover.
4. Position brake lining back plates between wheel and brake disc and brake cylinder on torque plate.Insert spacer blocks between back plates and cylinder, and install four bolts to secureassembly. If brake was disconnected, reconnect line and bleed brakes.

WHEELS AND BRAKES (Cont.)

REPAIR OF NOSE AND MAIN WHEEL ASSEMBLIES

Repairs are limited to blending out small nicks, scratches, gouges and areas of slight corrosion, plus replacement of parts which are cracked or badly corroded.

– NOTE –

Remove rust and blend out small nicks, using fine 400 grit sandpaper.

Wheels may also be repainted if parts have been repaired and thoroughly cleaned. Paint exposed areas with one coat zinc chromate primer and one coat of aluminum lacquer.

– NOTE –

Never paint working surfaces of bearing cups.

1. Bearing Cup Replacement:
   a. Removal:
      (1) Insert wheel half into boiling water for 15 minutes or place in an oven not exceeding 250°F (121°C) for 15 minutes.
      (2) Remove from source of heat and invert wheel half. If cup does not drop out, tap cup evenly from axle bore with a fiber drift pin or suitable arbor press.
   b. Installation:
      (1) To replace a new cup, apply one coat of zinc chromate primer to wheel half bearing bore.
      (2) Insert wheel half into boiling water for 15 minutes or place in an oven not exceeding250°F (121°C) for 15 minutes. Chill new bearing cup in dry ice for a minimumof 15 minutes.
      (3) Remove wheel half from source of heat and bearing cup from dry ice. Install chilled bearing cup into bearing bore of heated wheel half. Tap gently to seat evenly in place,using a fiber drift pin or suitable arbor press.

BRAKES

BRAKE ADJUSTMENT AND LINING TOLERANCE

No adjustment of brake lining clearance is necessary as they are self-adjusting. Inspection of lining is necessary, and it may be inspected visually while installed on airplane. Linings are of riveted type and should be replaced if thickness of any one segment becomes worn below .100 of an inch or unevenly worn.

WHEELS AND BRAKES (Cont.)

WHEEL BRAKE ASSEMBLY

REMOVAL AND DISASSEMBLY OF WHEEL BRAKE ASSEMBLY (Refer to Figure 20)

1. To remove brake assembly, first disconnect brake line from brake cylinder at tube fitting.
2. Remove cap bolts that join brake cylinder housing and lining back plate assembly. Remove back plate from between brake disc and wheel.
3. Slide brake cylinder housing from torque plate.
4. Remove pressure plate by sliding off anchor bolts of housing.
5. Piston(s) may be removed by injecting low air pressure in cylinder fluid inlet and forcing piston from housing.
6. Check anchor bolt for wear.
7. Remove anchor bolt by the following procedure:
   a. Position cylinder assembly on a holding fixture. (Refer to Figure 18.)
   b. Use a suitable arbor press to remove anchor bolt from cylinder body.
8. Install anchor bolt by the following procedure:
   a. Support anchor bolt in a holding fixture. (Refer to Figure 19, step a.)
   b. Align cylinder body over anchor bolt. (Refer to Figure 19, step B.)
   c. Use a suitable arbor press and apply pressure on spot face directly over anchor bolt hole. (Refer to Figure 19, step c.)

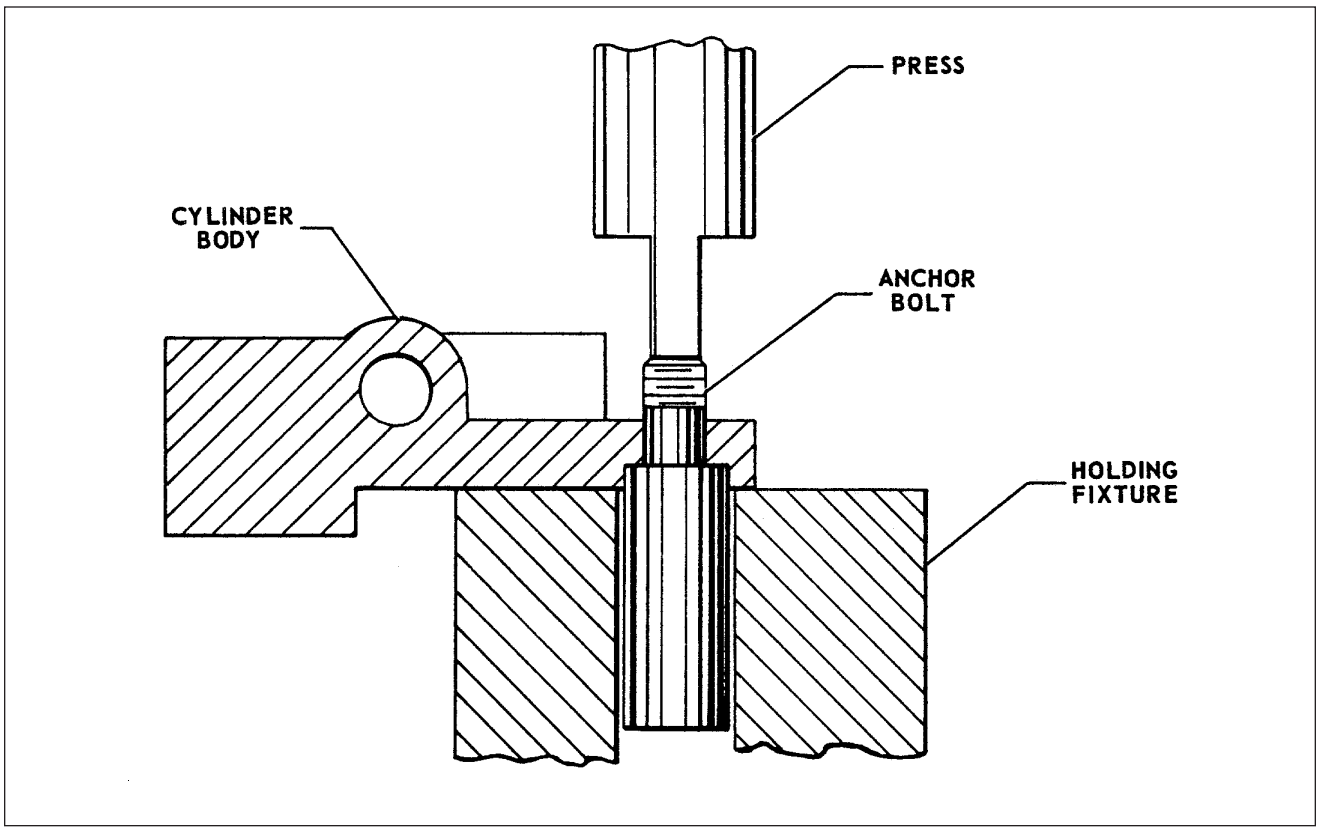

Removal of Anchor Bolt
Figure 18

WHEELS AND BRAKES (Cont.)

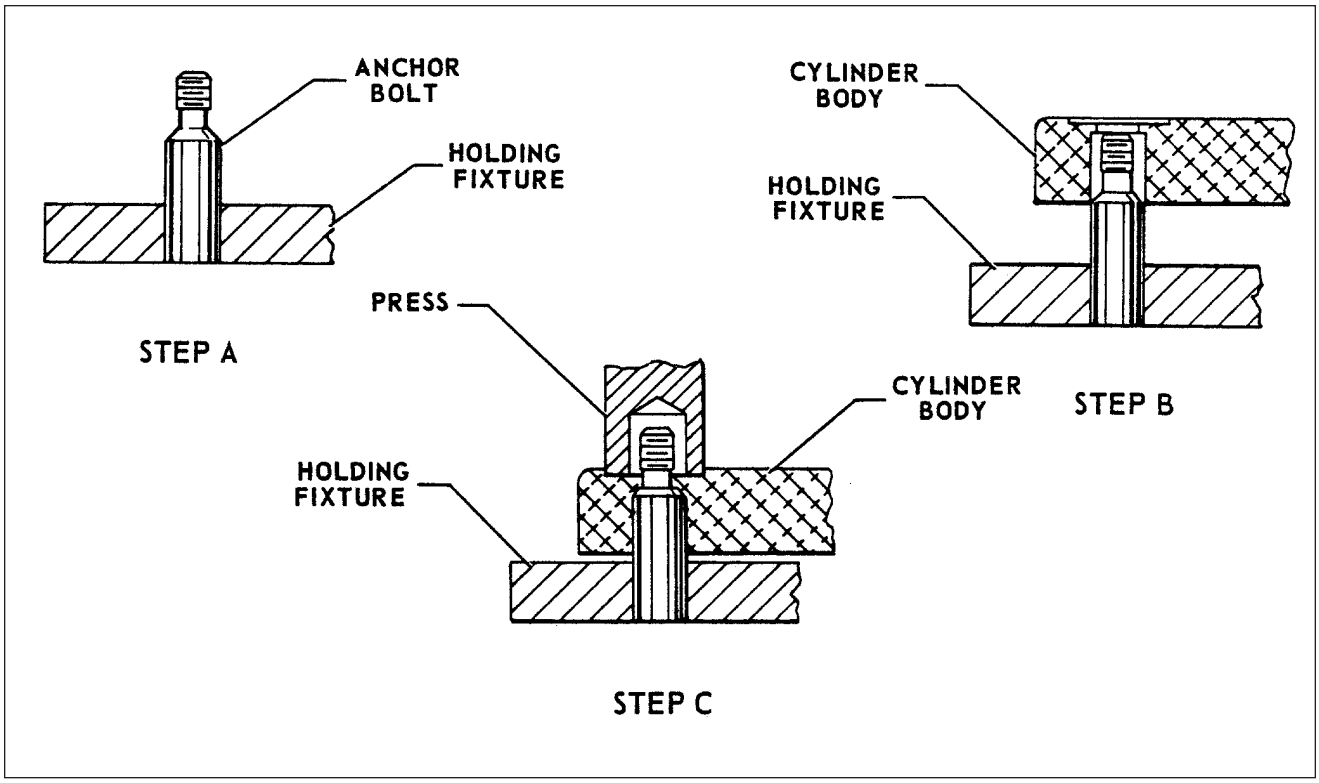

Installation of Anchor Bolt
Figure 19

CLEANING, INSPECTION AND REPAIR OF WHEEL BRAKE ASSEMBLY

1. Clean assembly with a suitable solvent and dry thoroughly.
2. Check wall of cylinder housing and piston for scratches, burrs, corrosion, etc., that may damage O-rings.
3. Check general condition of brake bleeder screw and lines.
4. Check brake disc for wear, grooves, scratches, or pits. Minimum service thickness of Disc 164- 22A used on Wheel Assembly 40-90C is 0.345. A heavy duty brake and wheel assembly is also optional. Minimum disc thickness of Disc 164-46 used on heavy duty Wheel Assembly 40-120 is 0.405. A single groove or isolated grooves up to .030 of an inch deep would not necessitate replacement, but a grooving of entire surface would reduce lining life and should be replaced. Should it be necessary to remove wheel disc, refer to Removal and Disassembly of Main Wheel.

WHEELS AND BRAKES (Cont.)

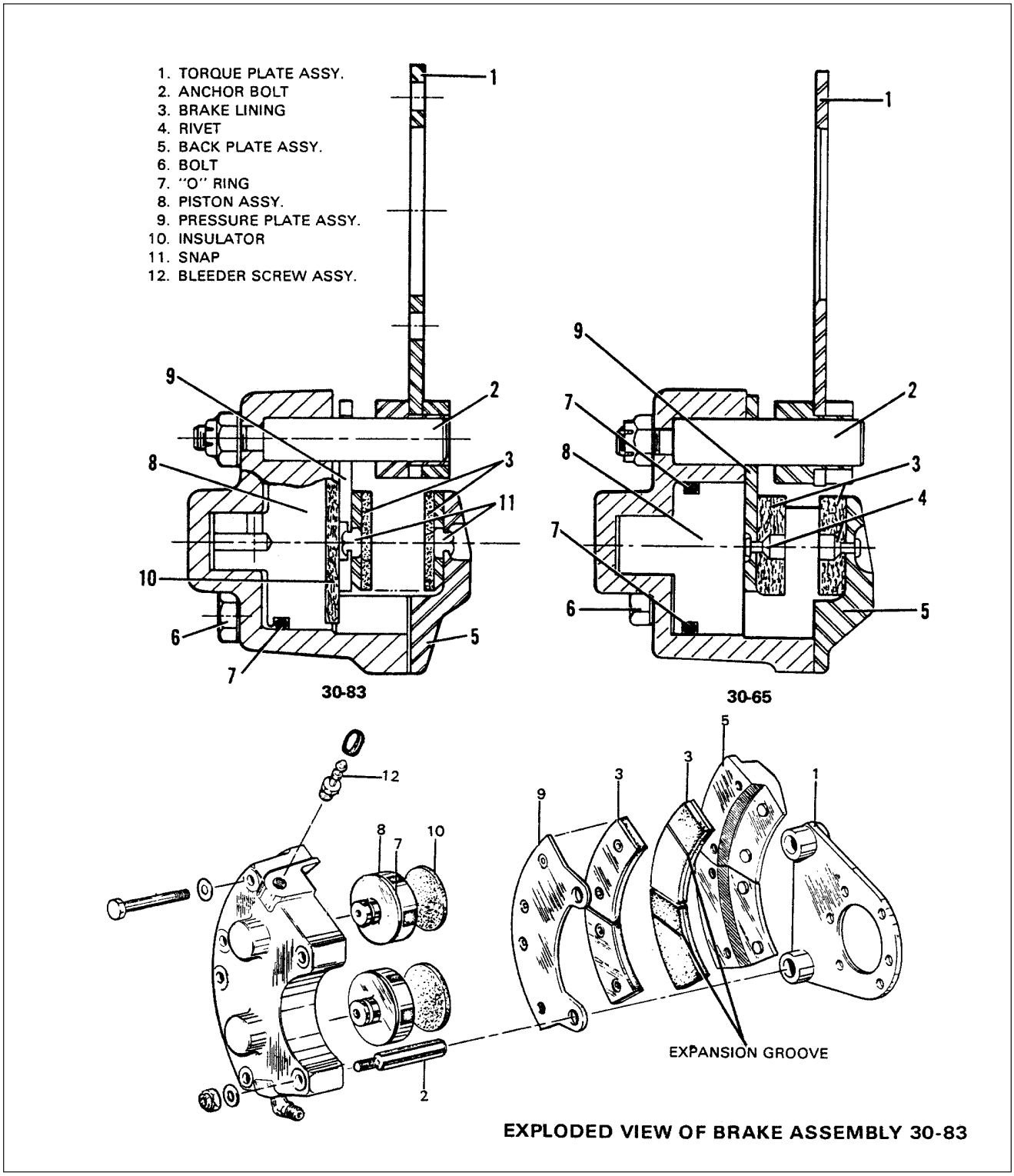

Wheel Brake Assembly
Figure 20

WHEELS AND BRAKES (Cont.)

5. Riveted type lining may be removed from backing plates by drilling out old rivets using a 5/32 drill. Install a new set of linings using proper rivets and a rivet set that will properly stake the lining and form a correct flair of the rivet. Snap-on type lining used on optional heavy duty assemblies may be removed by prying loose with a screwdriver or a thin flat wedge. Install snap-on type by positioning onto pins and applying pressure to snap into position.

– NOTE –

To inspect heavy duty brake lines (press-on metallic type) check expansion groove. If groove is not showing replace lining.

– NOTE –

Replacement of brake linings (organic) on standard Cleveland 30-65 brakes should be conditioned by performing a minimum of six light pedal effort braking applications from 25 to 40 mph allowing discs to partially cool between stops.

Replacement brake linings (metallic) used on optional heavy duty brakes (Cleveland 30-83) should be conditioned by performing two (2) consecutive full stop braking applications from 30 to 35 kts. Do not allow brake discs to cool substantially between stops. This will wear off any high spots and at same time generate sufficient heat to glaze surface of metallic linings. Once linings are glazed, they will provide many hours of maintenance free service.

ASSEMBLY AND INSTALLATION OF WHEEL BRAKE ASSEMBLY (Refer to Figure 20)

1. Lubricate piston O-ring(s) with fluid MIL-H-5606A and install on piston(s). Slide piston(s) in cylinder housing until flush with surface of housing.
2. Slide lining pressure plate onto anchor bolts of housing.
3. Slide cylinder housing assembly on torque plate of gear.
4. Position lining back plate between wheel and brake disc. Install bolts and torque to 40 inch -pounds to secure assembly.
5. Connect brake line to brake cylinder housing.
6. Bleed brake system as described in Bleeding Brakes.

BRAKE MASTER CYLINDER (HAND PARKING BRAKE)

REMOVAL OF BRAKE MASTER CYLINDER (HAND BRAKE) (Refer to Figure 21

1. To remove brake master cylinder, first disconnect inlet supply line from fitting at top of cylinder and allow fluid to drain from reservoir and line into a suitable container.
2. Disconnect pressure line from fitting on cylinder and allow fluid to drain from cylinder line.
3. Disconnect end of cylinder rod from brake handle by removing cotter pin that safeties connecting clevis pin. Remove clevis pin and spacer washers.

WHEELS AND BRAKES (Cont.)

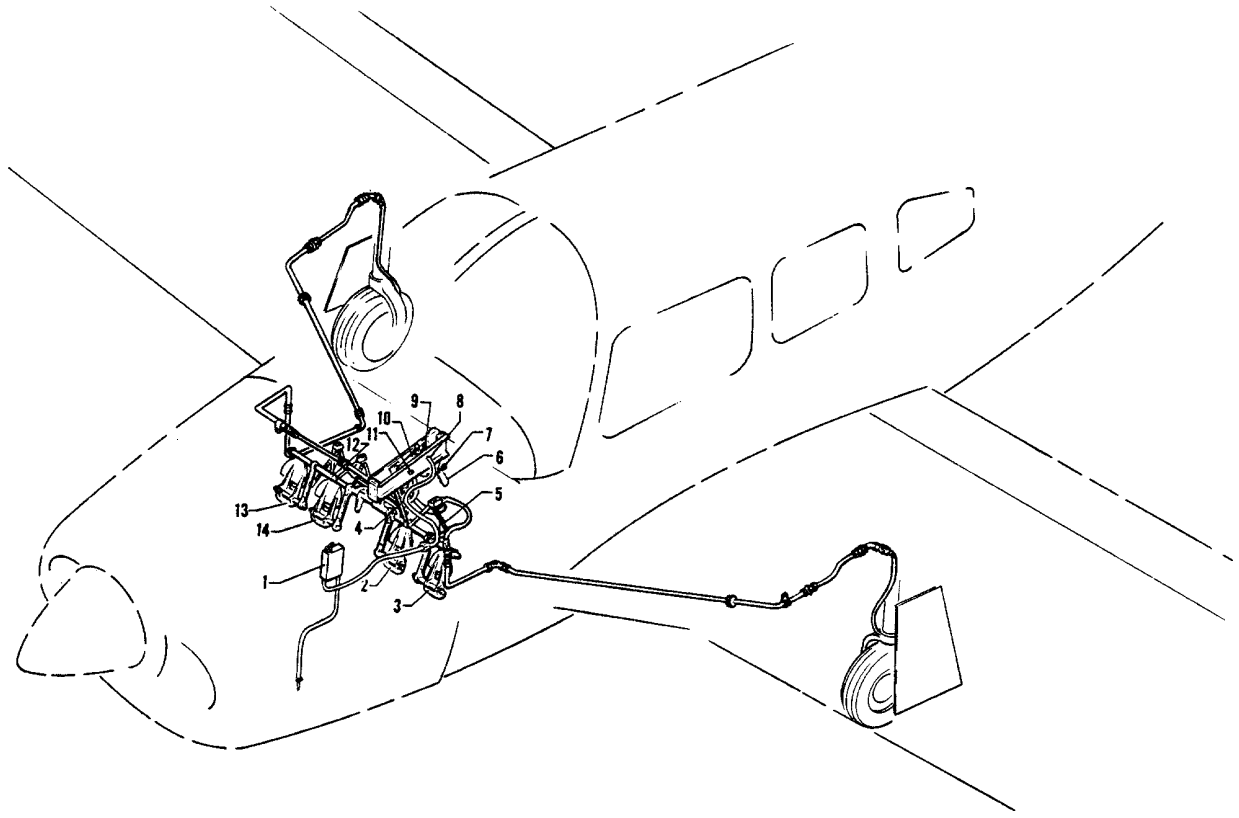

1. BRAKE RESERVOIR
2. RIGHT BRAKE AND RUDDER PEDAL
3. LEFT BRAKE AND RUDDER PEDAL
4. RIGHT BRAKE CYLINDER
5. LEFT BRAKE CYLINDER
6. BRAKE HANDLE
7. HANDLE RELEASE BUTTON
8. MASTER CYLINDER ASSEMBLY
9. TORQUE TUBE
10. RUDDER PEDAL PADS
11. BOLT ASSEMBLY
12. CLEVIS PIN
13. LINE, INLET

Brake System Installation
Figure 21

WHEELS AND BRAKES (Cont.)

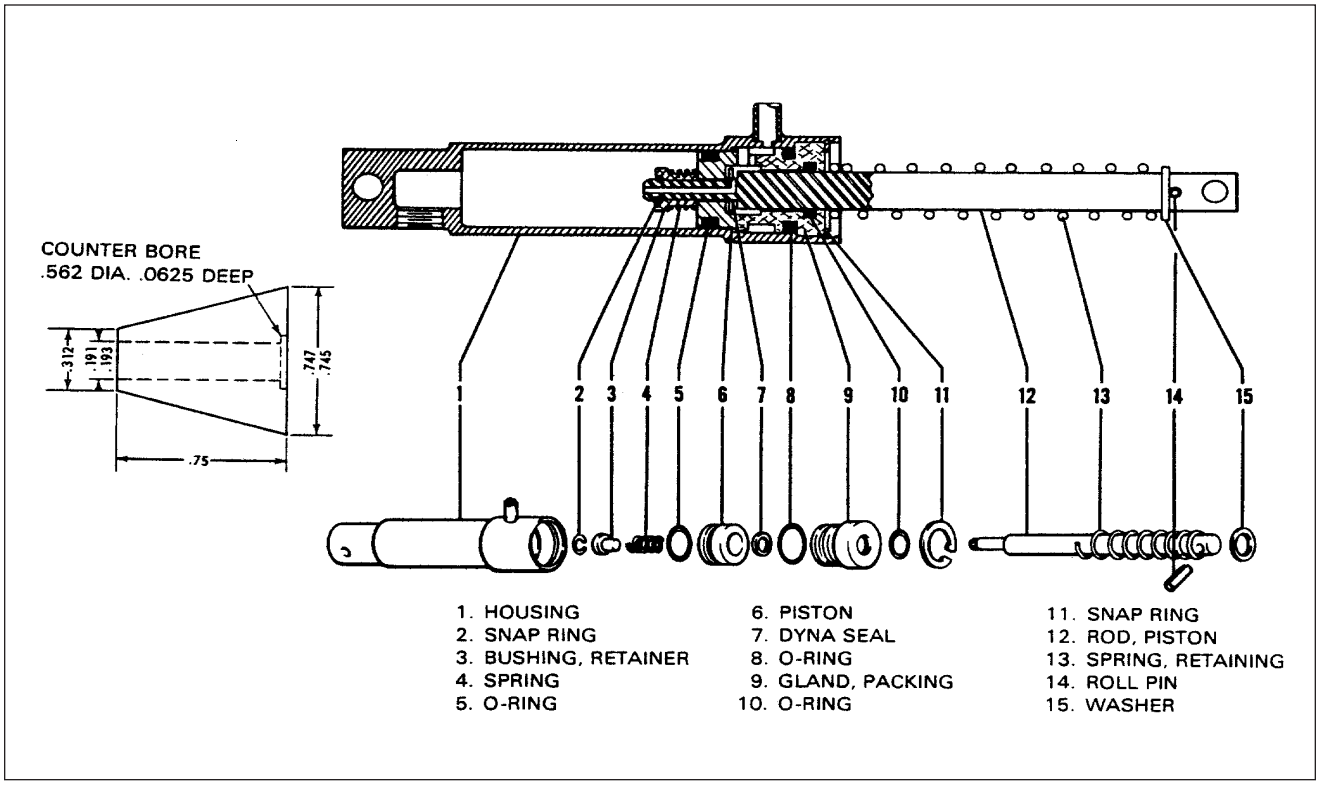

Brake Master Cylinder (Hand/Parking Brake)
Figure 22

4. Disconnect base of cylinder from its mounting bracket by removing attaching bolt assembly.
5. Handle assembly may be removed by removing attaching bolt assembly that secures handle to its mounting bracket.

DISASSEMBLY OF BRAKE MASTER CYLINDER (Refer to Figure 22)

1. Remove cylinder from its mounting bracket as per Removal of Brake Master Cylinder.
2. To disassemble cylinder, first remove piston rod assembly by removing snap ring from annular slot at rod end of cylinder. Draw piston rod assembly from cylinder.
3. Piston rod assembly may be disassembled by first removing small snap ring securing retainer bushing, spring, piston, seal, gland, and, if desired, large return spring.
4. Remove o-rings from piston and gland.

CLEANING, INSPECTION AND REPAIR OF BRAKE MASTER CYLINDER

1. Clean cylinder parts with a suitable solvent and dry thoroughly.
2. Inspect interior walls of cylinder for scratches, burrs, corrosion, etc.
3. Inspect general condition of fitting threads of cylinder.
4. Check piston for scratches, burrs, corrosion, etc.
5. Repairs to cylinder are limited to polishing out small scratches, burrs, etc., and replace O-rings.

WHEELS AND BRAKES (Cont.)

ASSEMBLY OF BRAKE MASTER CYLINDER (Refer to Figure 22)

– NOTE –

Use a small amount of hydraulic fluid (MIL-H-5606A) on O-ring and component parts to prevent damage and ease of handling during assembly.

1. Install new o-rings on outside of packing gland and on outside of piston. (When instal- ling teflon o-ring on piston, it is recommended that it be installed with use of a cone placed against piston. Cone may be constructed of plastic or metal with dimensions shown in Figure 22.)
2. To asseemble piston rod assembly, install on rod, in order, roll pins, return spring retainer washer, return spring, packing gland with O-rings, seal, piston with o-ring, spring and retainer bushing. Secure these pieces with small ring on end of rod.
3. Insert piston rod assembly in cylinder and secure packing gland with snap ring.
4. Install cylinder per Installation of Brake Master Cylinder.

INSTALLATION OF BRAKE MASTER CYLINDER (HAND BRAKE) (Refer to Figure 21)

1. Install brake handle assembly between its mounting bracket and secure with bolt, washers, nut and cotter pin. Washers should be placed on each side of handle, between bracket and under nut.
2. Place the cylinder between the mounting bracket and secure the base end with bolt, washers,nut and cotter pin. This,too, should have washers placed on each side of the cylinder and under the nut.
3. Connect rod end of cylinder to brake handle with a clevis pin and thin washers. Safety clevis with a cotter pin.
4. Connect pressure line to fitting at bottom of cylinder.
5. Connect inlet supply line to fitting at top of cylinder and secure with spring clamp.
6. Bleed brake system per Bleeding Brakes.

BRAKE CYLINDER (TOE BRAKE)

REMOVAL OF BRAKE CYLINDER (Refer to Figure 23)

1. Disconnect upper and lower lines from cylinder to be removed and cap lines to prevent fluid leakage or drain fluid from brake reservoir and master cylinder.
2. Remove cylinder from its attachment fittings by first removing cotter pins that safety cylinder attaching pins and then removing pins.

DISASSEMBLY OF BRAKE CYLINDER

1. Gar-Kenyon cylinder number 17000. (Refer to Figure 24.)
   a. Remove cylinder from its mounting bracket as per Removal of Brake Cylinder.
   b. To disassemble cylinder, first remove piston rod assembly by unscrewing fitting from cylinder.
   c. Piston rod assembly may be disassembled by first removing retaining ring securing sleeve and then removing spring, piston, seal, fitting, and, if desired, large return spring.
   d. Remove o-rings from piston and fitting.

WHEELS AND BRAKES (Cont.)

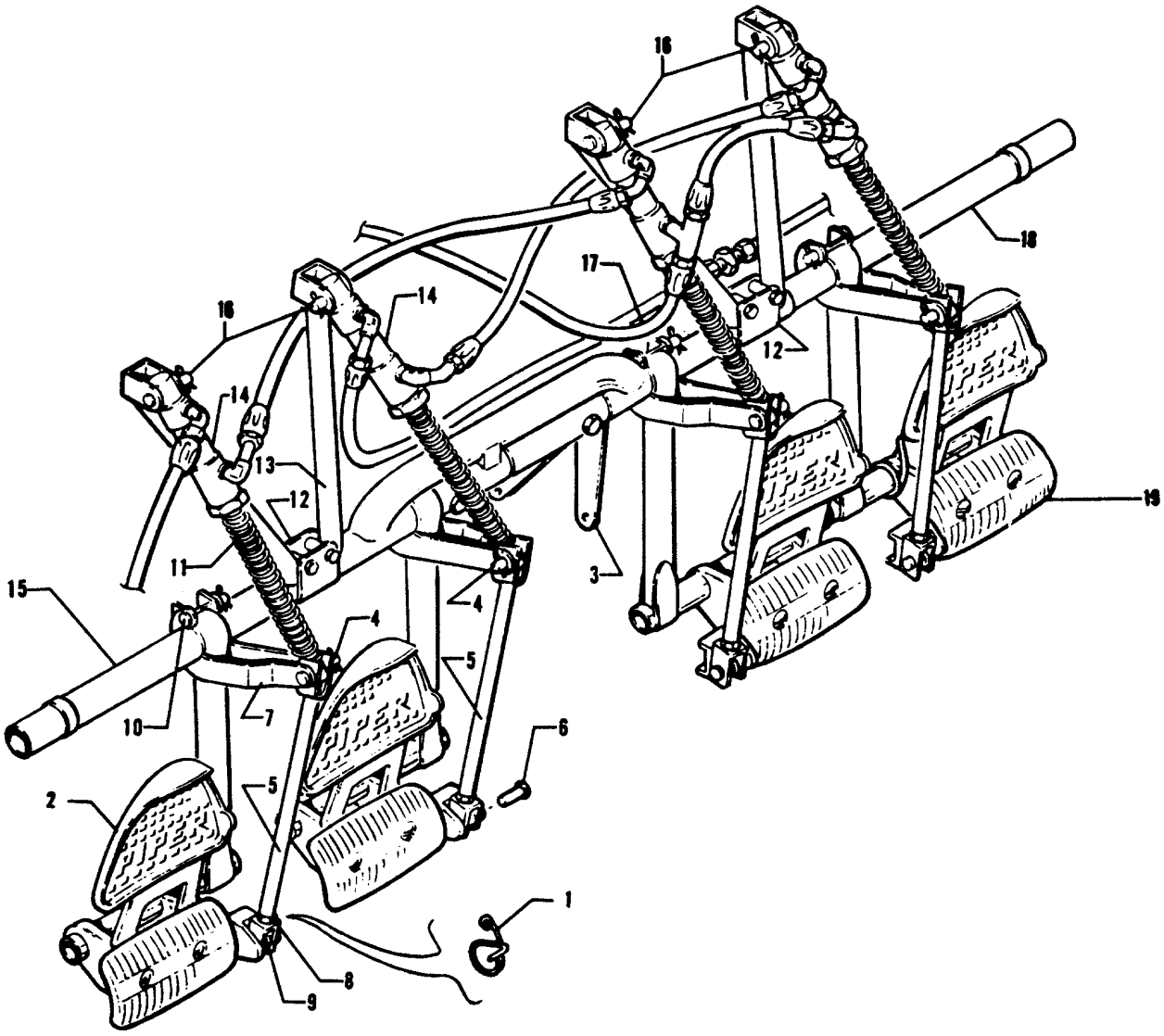

Toe Brake Installation
Figure 23

WHEELS AND BRAKES (Cont.)

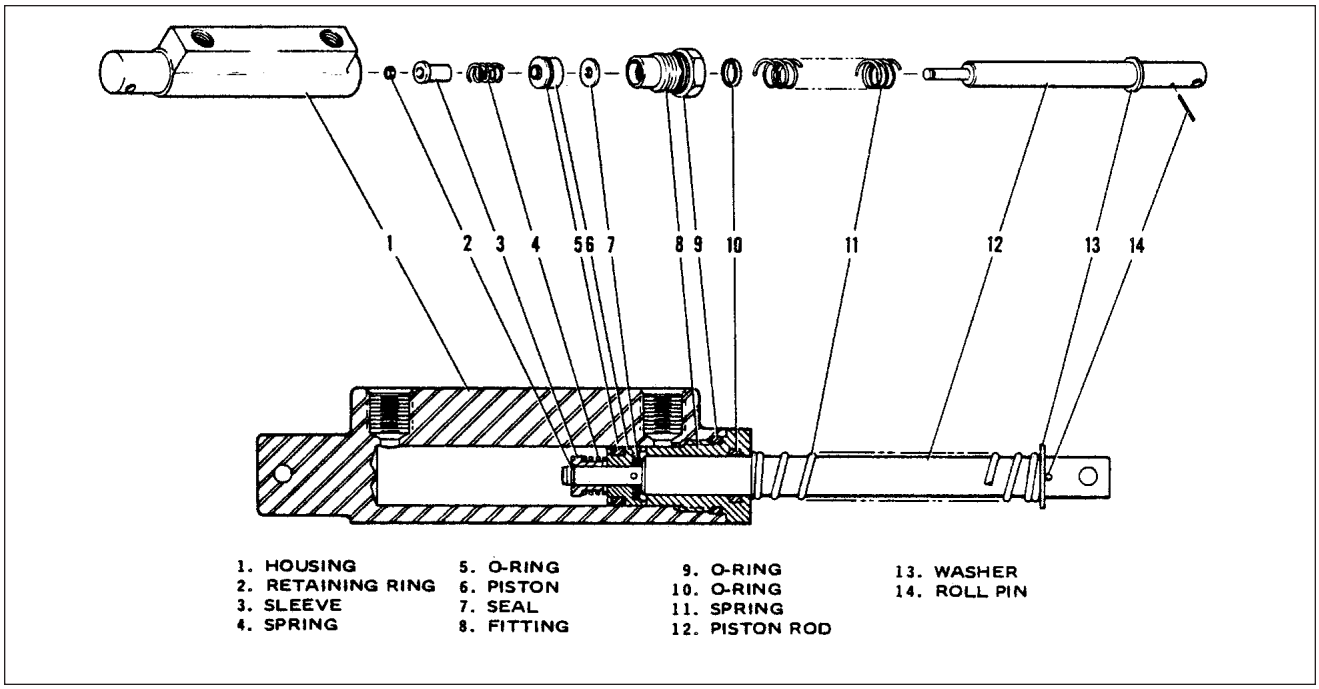

Brake Cylinder (17000) (Toe Brake)
Figure 24

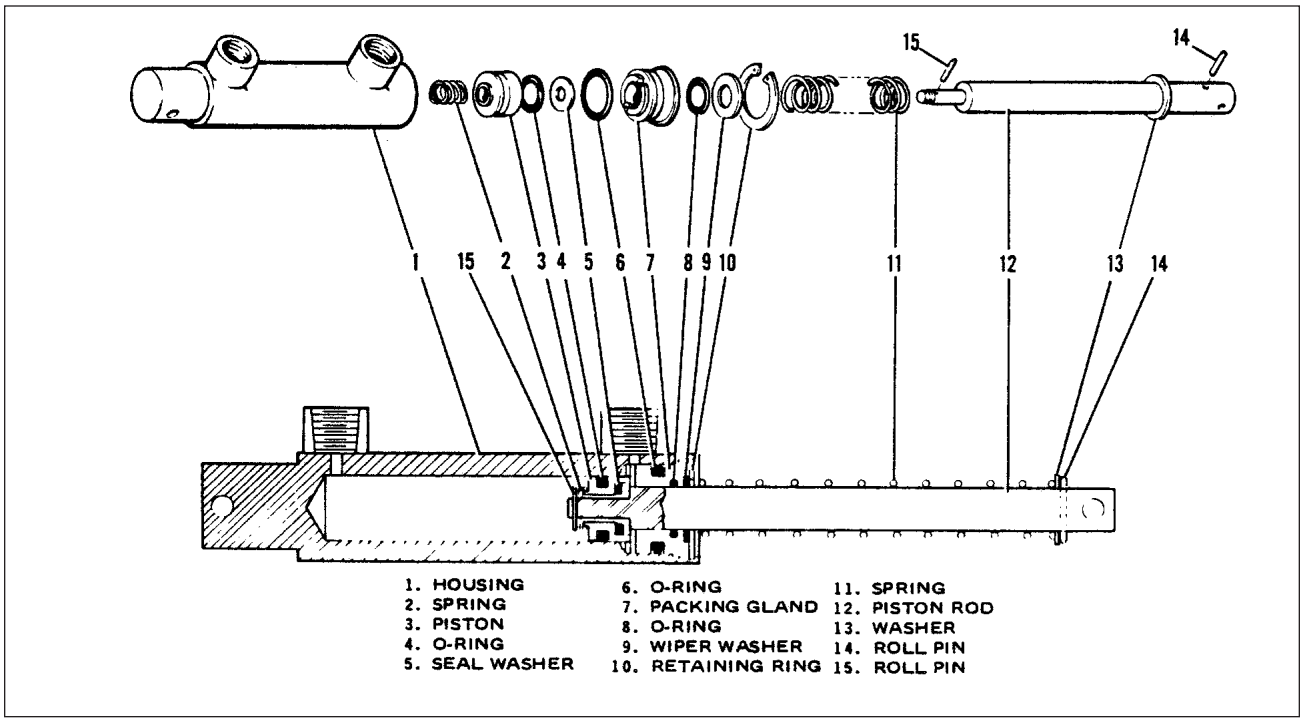

Brake Cylinder (10-27) (Toe Brake)
Figure 25

WHEELS AND BRAKES (Cont.)

2. Cleveland cylinder number 10-27. (Refer to Figure 25.)
   a. Remove cylinder from its mounting bracket per Removal of Brake Cylinder.
   b. To disassemble cylinder, first remove piston rod assembly by removing retaining ring from annular slot in cylinder housing. Draw piston rod assembly from cylinder.
   c. Piston rod assembly may be disassembled by first removing roll pin, spring, and then piston assembly, seal and packing gland, wiper washer and if desired, large return spring.
   d. Remove o-rings from piston and packing gland.
3. Cleveland cylinder number 10-30. (Refer to Figure 26.)
   a. Remove cylinder from its mounting bracket per Removal of Brake Cylinder.
   b. To disassemble cylinder, first remove piston rod assembly by removing retaining ring from annular slot in cylinder housing. Draw piston rod assembly from cylinder.
   c. Piston rod assembly may be disassembled by first removing retaining ring, sleeve, spring, and then piston assembly, O-ring, and gland, washer wiper, and if desired, return spring.
   d. Remove o-ring from piston and packing gland.

CLEANING, INSPECTION AND REPAIR OF BRAKE CYLINDER

1. Clean cylinder components with a suitable solvent and dry thoroughly.
2. Inspect interior walls of cylinder for scratches, burrs, corrosion, etc.
3. Inspect general condition of fitting threads.
4. Inspect piston for scratches, burrs, corrosion, etc.
5. Repairs to cylinder are limited to polishing out small scratches and burrs, and replacing seal and O-rings.

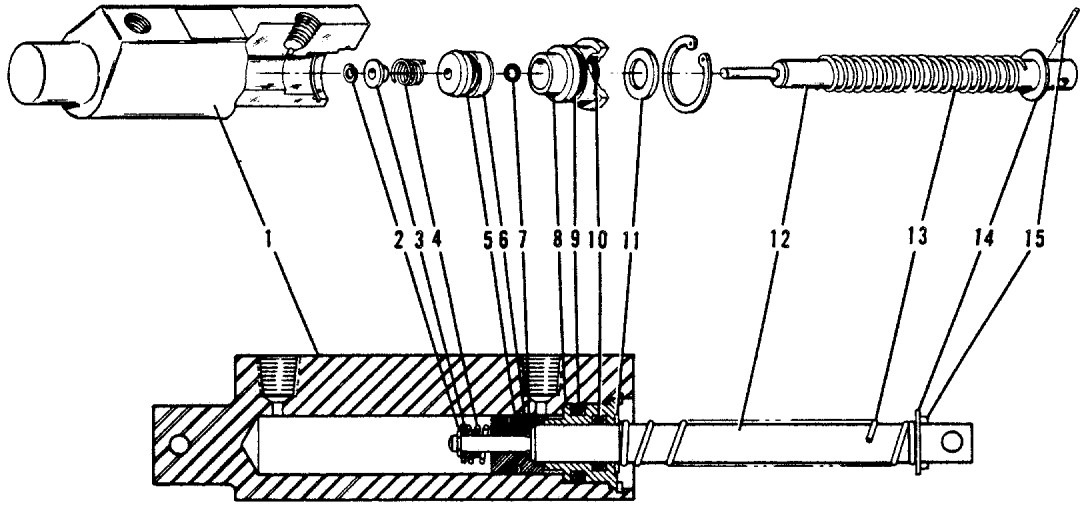

Brake Cylinder (10-30) (Toe Brake)
Figure 26

WHEELS AND BRAKES (Cont.)

ASSEMBLY OF BRAKE CYLINDER (Refer to Figures 24, 25 and 26)

– NOTE –

Rub a small amount of hydraulic fluid (MIL-H-5606) on all O-rings and component parts for ease of handling during reassembly and to prevent damage.

1. Gar-Kenyon cylinder number 17000. (Refer to Figure 24.)
   a. Install new O-rings on inside and outside of fitting and on outside of piston.
   b. To assemble piston rod assembly, install on rod, in order, roll pin, return spring retainer washer, return spring, fitting with O-rings, seal, piston with O-ring, spring and sleeve. Secure these pieces with retaining ring on end of rod.
   c. Insert piston rod assembly in cylinder and secure fitting.
   d. Install cylinder per Installation of Brake Cylinder.
2. Cleveland cylinder number 10-27. (Refer to Figure 25.)
   a. Install new O-rings on inside and outside of packing gland and on outside of piston.
   b. To assemble piston rod assembly, install on rod, in order, roll pin, washer, spring, washer, packing gland with O-rings, seal, piston assembly with O-ring, spring, and roll pin.
   c. Insert piston rod assembly in cylinder and secure with retaining ring.
   d. Install cylinder per Installation of Brake Cylinder.
3. Cleveland cylinder number 10-30. (Refer to figure 32-21.)
   a .Install new O-rings on inside and outside of packing gland and on outside of piston.
   b. To assemble piston rod assembly, install on rod, in order, roll pin, washer, spring, washer, packing gland with O-rings, seal, piston assembly with O-ring, sleeve and retaining ring.
   c. Insert piston rod assembly in cylinder and secure with retaining ring.
   d. Install cylinder per Installation of Brake Cylinder.

INSTALLATION OF BRAKE CYLINDER (Refer to Figure 23)

1. Position cylinder at its mounting points and attach with clevis pins. Safety pins with cotter pins.
2. Connect brake lines to cylinder fittings.
3. Bleed brakes per Bleeding Brakes.

BLEEDING BRAKES

BRAKE BLEEDING PROCEDURE (GRAVITY)

1.On both main landing gear wheel brake assemblies, attach a clear plastic hose to brake bleeders and extend into container partially filled with hydraulic fluid, MIL-H-5606A. Ends of this hose should be submerged in the fluid. Open both bleeders approximately one and one-half to two turns.
2.Fill brake reservoir on firewall with hydraulic fluid, MIL-H-5606A.
3.Disconnect toe brake cylinders from pedal connection by removing clevis pin, washer and cotter pin.
4.Invert toe brake cylinder to aid in releasing trapped air in top of cylinder.
5.Check toe brake pedals in cockpit to insure pedals are pulled full aft.
6.Pull hand brake handle, pumping master cylinder very slowly approximately 25 times until fluid is observed passing through clear plastic hoses at wheel cylinder.

WHEELS AND BRAKES (Cont.)

– NOTE –

Fluid level in reservoir must be maintained to prevent air from entering line.

7. Tighten both wheel bleeders.
8. Pull hand brake until a firm handle is maintained.

BRAKE BLEEDING PROCEDURE (PRESSURE)

1. Place a small clear plastic hose on vent tube of brake reservoir and place a second small clear plastic hose on bleeder fitting on one main landing gear. Place open ends of these tubes in a suitable container to collect fluid overflow. Open bleeder fitting one or two turns.
2. On other main gear, slide hose of pressure unit over bleeder fitting then open fitting one or two turns and pressure fill brake system with MIL-H-5606A fluid.
3. With fluid continually flowing through brake system, SLOWLY and together actuate hand brake and toe brake pedal of side being bled, several times, to purge cylinders of air. On dual brake installations, both right and left pedals must be actuated.

– NOTE –

By watching fluid pass through plastic hose at fluid reservoir and bleeder fitting on gear being bled, it can be determined whether any air is left in system. If air bubbles are evident, filling of system shall be continued until all air is out of system and a steady flow of fluid is obtained. Should brake handle remain spongy, it may be necessary to disconnect bottom of toe brake cylinders (next to pedal) and rotating cylinder horizontally or even above horizontal and by use of hand brake alone, purge air from system.

4. Close open bleeder fitting on gear being bled. Close open bleeder fitting to which pressure hose is attached; then close pressure unit and remove hoses from bleeder fittings. Check brakes for proper pedal pressure. Replace caps over bleeder fittings.

– NOTE –

It may be necessary to remove any trapped air in top of wheel brake unit by applying pressure to system with brake hand lever and slowly opening bleeder and release hand lever.

5. Repeat this procedure, if necessary, on other gear.
6. Drain excess fluid from reservoir to fluid level line with a syringe.

WHEELS AND BRAKES (Cont.)

BRAKE SYSTEM LEAK CHECK

1. Pull for a good firm hand brake and lock parking brake mechanism. Allow system to stand for approximately 10 minutes; then by gripping parking brake handle, it should not be able to be pulled aft further than original set. Should handle be able to be pulled towards panel and feel spongy, a leak is present at some point in system. This leak may appear at any one of the connections throughout system or internally in master brake cylinder or wheel brake assemblies.

BLEEDING OF BRAKES AFTER A UNIT HAS BEEN CHANGED

1. Actuate hand brake handle until some pressure builds up in system. At this time, crack attaching B nuts at any of hose connections of replaced unit. Most of handle sponge feeling should be displaced by this action. Retighten B nuts.
2. Actuate master cylinder and toe brake cylinder of side unit which was changed and bleed fluid through brake assembly on wheel by pumping pressure and cracking bleeder until pressure drops.

– CAUTION –

Do not allow pressure to bleed off before closing bleeders, for this will allow air to enter system. Repeat pumping and bleeding approximately 10 or more times or until all air is released from system. During all bleeding, fluid level of reservoir must be maintained.

– END –

GRIDS 3D15 THROUGH 3D17
PAGES 32-70 THROUGH 32-72
INTENTIONALLY LEFT BLANK

POSITION AND WARNING

LANDING GEAR LIMIT SWITCHES

– NOTE –

All adjustments of limit switches should be made with airplane on jacks. Do not bend actuator springs mounted on limit switches.

ADJUSTMENT OF NOSE GEAR UP LIMIT SWITCH

Gear up limit switch is mounted on a bracket above the point where right side of upper drag link attaches to engine mount. (Refer to Figure 27.)

1. To facilitate adjustment of limit switch, disconnect gear doors or remove bottom cowl, as desired.
2. Retract landing gear hydraulically by turning master switch on, raising emergency gear extension lever and moving gear selector handle to up position. Retain emergency extension lever in up position and turn master switch off.
3. Block nose gear in up position and then slowly release emergency extension lever. This will relieve hydraulic pressure and main gear will drop.
4. Push gear up tight and block.
5. Loosen lower attachment screw of switch bracket and rotate switch toward actuator tang until 0.06 to 0.08 measurement (noted in Figure 27) is obtained. Switch tang should be actuated a minimum of 0.12 inches in from lower end of tang.
6. Manually move gear up and down only as far as necessary to ascertain that switch actuates within 0.12 of full up position. Remove block from under gear and allow it to slowly extend.
7. Retract gear hydraulically and ascertain that red gear unsafe light will go out when gear has retracted and pump has shut off.

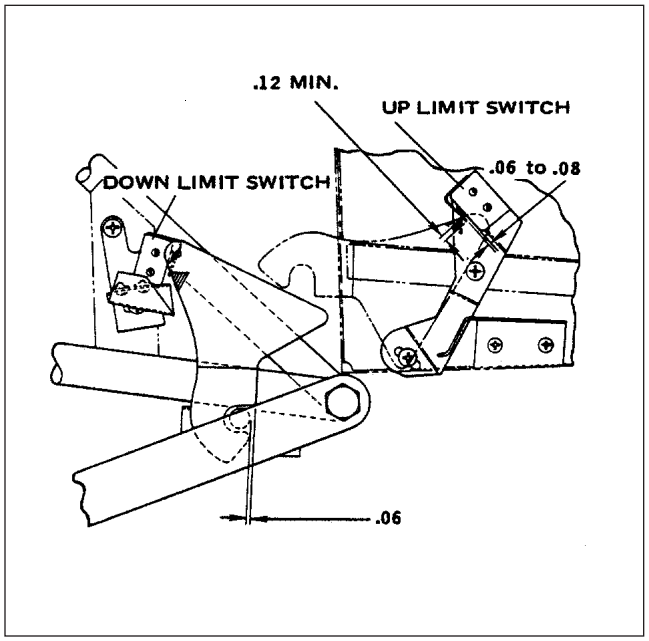

Adjustment of Nose Gear Limit Switches
Figure 27

POSITION AND WARNING (Cont.)

ADJUSTMENT OF NOSE GEAR DOWN LIMIT SWITCH

Gear down limit switch is mounted on horizontal support tube of engine mount that runs between right attachment points of gear housing and upper drag link.

1. Ascertain that gear is down and locked.
2. Down limit switch should actuate only after leading edge of downlock hook, when moving to locked position, has passed downlock roller by 0.06 of an inch. (Refer to Figure 27.) Position hook at this location in relation to roller by moving actuator piston manually toward up position. Downlock spring may be disconnected, if desired.
3. Loosen lower attachment screw of switch mounting bracket and move bracket toward downlock hook until it is heard to actuate. Retighten bracket attachment screw.
4. Manually move hook from locked to unlocked position and ascertain that switch actuates at correct location of hook.
5. Retract and extend gear hydraulically by turning master switch on, raising emergency gear extension lever and moving gear selector handle to up position. As gear begins to retract, green light below selector should go out and red gear unsafe light at top of instrument panel (PA-32R-301 SP/301T SP) or GEAR WARN anunciator light (PA-32R-301 II HP) come on.

ADJUSTMENT OF MAIN GEAR UP LIMIT SWITCH

A gear up limit switch is located in each wheel well above gear door hinge. There is no adjustment of these switches other than to check that gear, when retracting, will actuate switch within .88 of an inch of full up. Switch operation turns red gear unsafe light (PA-32R-301 SP/301T SP) or GEAR WARN anunciator light (PA-32R-301 II HP) out.

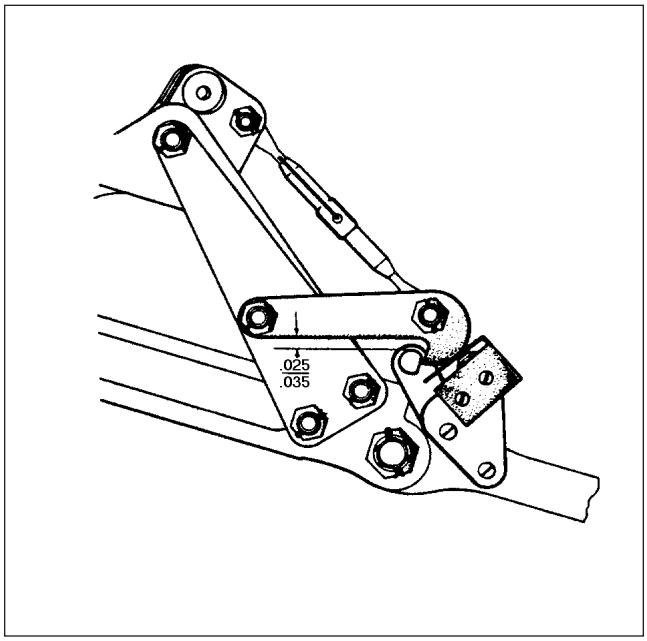

Adjustment of Main Down Limit Switch
(Early Models)
Figure 28 (Sheet 1 of 2)

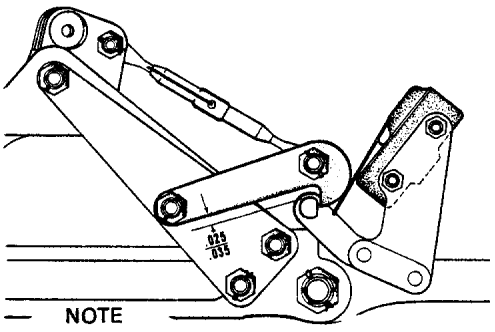

Adjustment of Main Down Limit Switch
(Later Models)
Figure 28 (Sheet 2 of 2)

POSITION AND WARNING (Cont.)

ADJUSTMENT OF MAIN GEAR DOWN LIMIT SWITCH

A gear down limit switch is mounted on a bracket which is attached to lower drag link of each main gear. Switch should be adjusted to allow it to actuate thus turning on green indicator light in cockpit when downlock hook has entered locked position and is within .025 and .035 of an inch of contacting downlock pin. (Refer to appropriate Figure 28.) Adjustment of switch may be as follows:

1. Ascertain that main gear downlock is properly adjusted as described in Adjustment of Main Landing Gear.
2. Raise airplane on jacks. (Refer to Jacking, Chapter 7.)
3. Ascertain landing gear is down and pressure is relieved from hydraulic system. To relieve pressure, hold down emergency extender lever as necessary (insure override is not in uplock position).
4. Raise downlock hook assembly and place a .030 of an inch feeler gauge between horizontal surface of hook that is next to switch (surface that contacts downlock pin) and rounded surface of pin. Lower hook and allow it to rest on feeler gauge.
5. Loosen attaching screws of switch and, while pushing up on center of link assembly, rotate switch toward hook until it is heard to actuate. Retighten attaching screws of switch.
6. Manually move hook assembly up from pin until hook nearly disengages from pin. Then, with pressure against bottom of link assembly, move back to ascertain that switch actuates within .025 to .035 of an inch of full lock.
7. Retract and extend gear hydraulically by turning master switch on, raising emergency gear extension lever and moving gear selector handle to up position. As gear begins to retract, green light below selector should go out and red gear unsafe light at top of instrument panel should come on.

ADJUSTMENT OF LANDING GEAR SAFETY SWITCH (SQUAT SWITCH)

– CAUTION –

If squat switch must be replaced, refer to SB 938, or determine if protective sleeve is installled on squat switch harness at switch bracket.

Landing gear safety switch, located on left main gear housing is adjusted so that switch is actuated within last quarter of an inch of gear extension.

1. Compress strut until 7.875 inches is obtained between top of gear fork and bottom of gear housing. Hold gear at this measurement.
2. Adjust switch down until it actuates at this point. Secure switch.
3. Extend and then compress strut to ascertain that switch will actuate within last quarter of an inch of oleo extension.

POSITION AND WARNING (Cont.)

ADJUSTMENT OF GEAR BACK-UP EXTENDER ACTUATOR SWITCH

– NOTE –

PA32R-301 airplanes with s/n's 32R-8013001 thru 32R-8613005 and 3213001, and PA32R-301T airplanes with s/n's 32R-8029001 thru 32R-8029110, 32R-8029121 thru 32R-8629006 and 3229001 thru 3229002 may be equipped with a back-up landing gear extender. Refer to Piper Service Bulletin No. 866A

Back-up extender actuator switch is mounted on extender unit located under center seats floorboard. Inasmuch as switch is a component of the back-up extender, instructions for adjustment of switch will be found with adjustment instructions for extender as found in Chapter 29.

LANDING GEAR WARNING SWITCHES (THROTTLE SWITCHES)

LANDING GEAR/UP POWER REDUCED WARNING SWITCH

Gear up/power reduced warning switch (Switch A) is within control quadrant below throttle control lever. (Refer to Figure 29.) This switch will actuate warning horn and red light simultaneously when landing gear is not down and locked, and throttle is reduced below 14 inches of manifold pressure.

REMOVAL OF LANDING GEAR UP/POWER REDUCED WARNING SWITCH

1. Loosen quadrant cover by removing cover attaching screws from each side and at bottom of cover.
2. Pull cover aft enough to remove screws that secure reinforcing clip to top underside of cover. Remove cover.
3. Remove switch from its mounting bracket by removing switch attaching screws.
4. Disconnect electrical leads from switch.

INSTALLATION OF LANDING GEAR UP/POWER REDUCED WARNING SWITCH

1. Connect electrical leads to switch.
2. Position switch with actuator follower against its mounting bracket and secure with screws.
3. Switch may be adjusted at this time per instructions in Adjustment of Landing Gear Up/Power Reduced Warning Switch.
4. With control levers aft, slide quadrant cover into position around controls far enough to allow cover reinforcement clip to be installed at top underside of cover and secure with screws.
5. Install cover and secure with screws.

POSITION AND WARNING (Cont.)

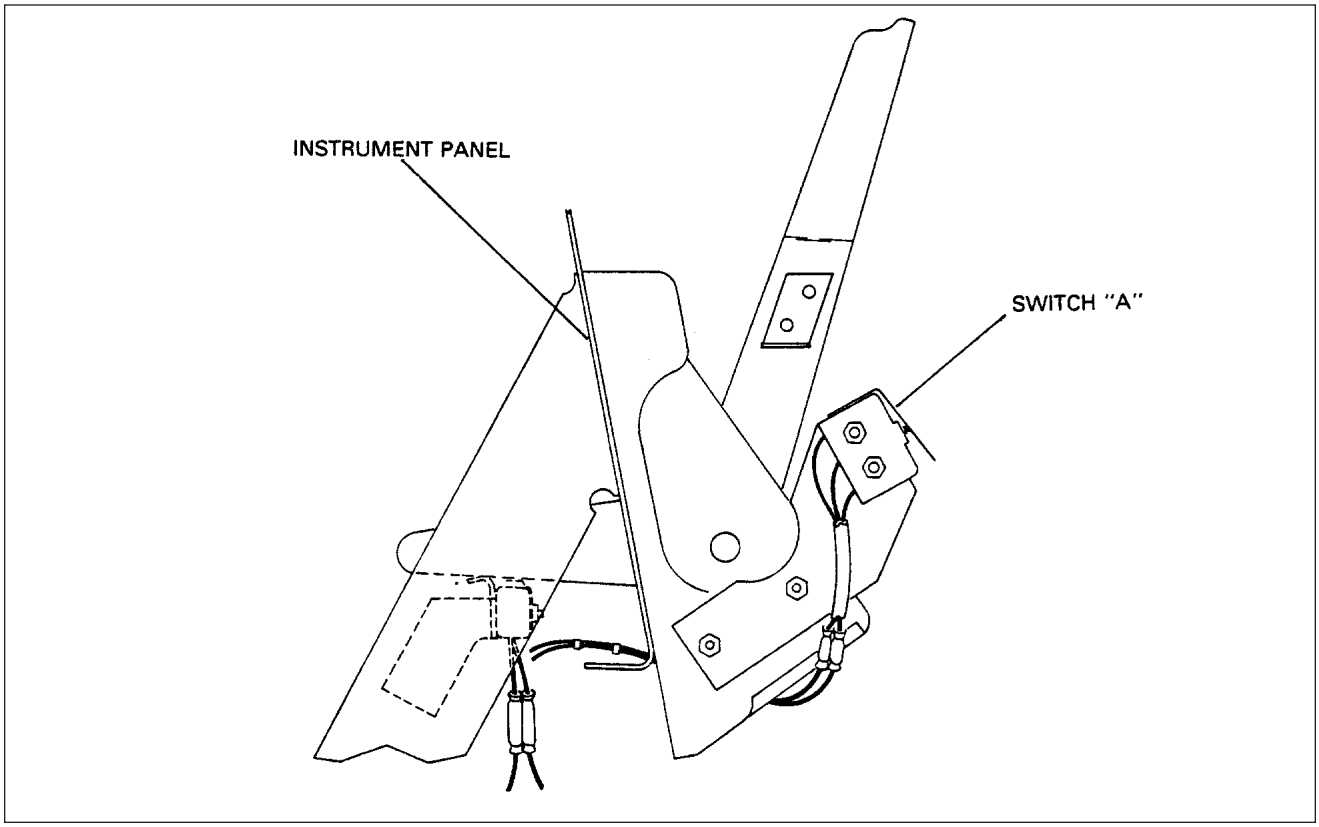

Throttle Warning Switch
Figure 29

ADJUSTMENT OF LANDING GEAR UP/POWER REDUCED WARNING SWITCH

1. Remove control quadrant cover as given in Removal of Landing Gear Up/Power Reduced Warning Switch.
2. Flight test airplane and at a safe altitude, establish a normal descent with gear up and propeller control at a desired low pitch setting.
3. Retard throttle to a manifold pressure of approximately 14 inches. This setting should be an airpseed above 104 KIAS.
4. In some manner, mark throttle lever in relation to its position next to mounting bracket.
5. With airplane on ground and throttle positioned to mark, loosen screws that secure switch and rotate it toward throttle until it is heard to actuate. Retighten switch attachment screws.
6. Advance and retard throttle to ascertain that switch actuates at desired throttle lever setting. Airplane may also be flown to ascertain that horn and light will actuate when throttle is reduced below approximately 14 inches of manifold pressure with gear up.
7. Reinstall quadrant cover as given in Installation of Landing Gear Up/Power Reduced Warning Switch.

INTENTIONALLY LEFT BLANK

CHAPTER

33

LIGHTS

CHAPTER 33 - LIGHTS

TABLE OF CONTENTS/EFFECTIVITY

CHAPTER SECTION	SUBJECT	GRID NO.	EFFECTIVITY
33-00-00	GENERAL	3E2	July 1, 1993
33-00-00	Description and Operation	3E2	July 1, 1993
33-00-00	Troubleshooting	3E2	July 1, 1993
33-10-00	FLIGHT COMPARTMENT	3E6	July 1, 1993
33-10-00	Instrument and Panel Lights	3E6	July 1, 1993
33-10-00	Removal of Dimmer Control Assembly	3E6	July 1, 1993
33-10-00	Installation of Dimmer Control Assembly	3E6	July 1, 1993
33-10-00	Annunciator Panel	3E6	July 1, 1993
33-40-00	EXTERIOR	3E8	July 1, 1993
33-40-00	Landing/Taxi Light	3E8	July 1, 1993
33-40-00	Removal and Installation of Landing Light	3E8	July 1, 1993
33-40-00	Anti-Collision Light (Strobe)	3E8	July 1, 1993
33-40-00	Removal of Wing Tip Strobe Light	3E8	July 1, 1993
33-40-00	Installation of Wing Tip Strobe Light	3E8	July 1, 1993
33-40-00	Removal of Strobe Power Supply	3E10	July 1, 1993
33-40-00	Installation of Strobe Power Supply	3E10	July 1, 1993
33-40-00	Troubleshooting Procedure	3E10	July 1, 1993

LIGHTS

GENERAL

This chapter provides instructions relating to maintenance of lighting equipment used on this aircraft.

DESCRIPTION AND OPERATION

Electrical switches are located on right center instrument panel, and circuit breakers are located on lower right instrument panel. A rheostat switch on left side of switch panel controls navigational lights and radio lights. Similar switch on right side controls and dims panel lights.

Annunciator panel includes alternator, low oil pressure and vacuum indicator lights. Also an overboost indicator light on the PA-32R-301T. Annunciator panel lights are provided only as a warning to pilot that a system may not be operating properly, and that applicable system gauge should be checked and monitored to determine when or if any necessary action is required.

TROUBLESHOOTING

When checking lighting system, master switch must be on in order for lights to operate. Insure that circuit breaker which protects light circuit being checked is pushed ON.

CHART 1 (Sheet 1 of 3)
ELECTRICAL SYSTEM TROUBLESHOOTING

ANNUNCIATOR PANEL		
Trouble	Cause	Remedy
All warning lights fail to operate	Blown fuse.	Replace 5 amp fuse behind instrument panel.
	No current from bus.	Check all wire segments, connections, and the receptacle at the left side of the annun ciator panel.
All the warning lights fail to extinguish after engine is running	Test switch grounded out.	Check terminals and replace switch if necessary.
OIL warning light fails to operate.	Bulb burned out.	Replace.
	No current to sensor.	Check all wire segments and connections
	Sensor activates at too low a setting.	Replace.
	Defective sensor.	Replace.

LIGHTS (Cont.)

CHART 1 (Sheet 2 of 3)
ELECTRICAL SYSTEM TROUBLESHOOTING

ANNUNCIATOR PANEL (Cont.)		
Trouble	Cause	Remedy
OIL warning light fails to extinguish.	Sensor activates at too high a setting.	Replace.
	Sensor terminals bridged.	Remove material between terminals.
	Defective sensor.	Replace.
OVER BOOST warning light fails to operate	Bulb burned out	Replace
	Circuit in manifold pressure guage defective	Replace gauge
OVER BOOST warning light fails to extinguish.	Press to test switch shorted to ground.	Replace switch.
	Circuit in manifold pressure gauge defective.	Replace gauge.
VAC warning light fails to operate.	Bulb burned out.	Replace.
	No current to sensor.	Check all wire segments and connections.
	Sensor activates at too low a setting.	Replace.
	Defective sensor.	Replace.
VAC warning light fails to extinguish.	Sensor activates at too high a setting.	Replace.
	Sensor terminals bridged.	Remove material between terminals.
	Defective sensor.	Replace.
ALT warning light fails to operate.	Bulb burned out.	Replace.
	No current from bus to resistor.	Check all wire segments and connections.
	Large diode shorted.	Replace.

LIGHTS (Cont.)

CHART 1 (Sheet 3 of 3)
ELECTRICAL SYSTEM TROUBLESHOOTING

ANNUNCIATOR PANEL (Cont.)		
Trouble	Cause	Remedy
ALT warning light fails to extinguish.	Blown fuse.	Replace 5 amp fuse near the diode heat sink.
	No current from the fuse to the resistor.	Check all wire segments and connections.
Test switch fails to activate warning lights	Bad switch or connections.	Check wires and replace switch if necessary
ALT warning light fails to extinguish, ammeter reads full output.	Diode heat sink shorted to airframe.	Replace teflon insulating washers. Do not tighten screws excessively.

– END –

INTENTIONALLY LEFT BLANK

FLIGHT COMPARTMENT

INSTRUMENT AND PANEL LIGHTS

Instrument and panel lights are broken up into five groups; Upper Panel Lights, Lower Panel Lights, Console Lights, Coupler Lights and Compass Light. Instrument lights are controlled by a 5 amp circuit breaker through a transistorized dimmer. Dimmer control is located in middle of instrument panel just above pedestal. There is one control knob connected to a variable resistor that controls intensity of instrument lights. There is a second control knob connected to a variable resistor which controls light intensity for all avionic equipment. It may be necessary to gain access to Dimmer Control Assembly; if so follow instructions given below.

REMOVAL OF DIMMER CONTROL ASSEMBLY

1. Access to Dimmer Control Assembly is from beneath instrument panel.
2. Disconnect electrical connection from assembly.
3. Remove two screws securing assembly to instrument panel.
4. Remove assembly from airplane.

INSTALLATION OF DIMMER CONTROL ASSEMBLY

1. Position assembly in instrument panel with control knobs inserted into appropriate slots.
2. Secure assembly to instrument panel with two screws previously removed.
3. Connect electrical connection to assembly.
4. Check operation of Dimmer Control Assembly.

ANNUNCIATOR PANEL

The annunciator panel is a small cluster of lights which warn of malfunctions in various circuits or systems. A malfunction is identified by illumination of an individual warning light. There are three warning lights on PA-32R-301 SP models, four warning lights on PA-32R-301T SP models, and six to eight warning lights (depending on installed options) on PA-32R-301 II HP models. Power is supplied from bus bar through a 5 amp fuse located behind circuit breaker panel.

VAC warning light is controlled by a vacuum sensor switch located at bulkhead and is attached to vacuum regulator. Sensor switch will activate when differential pressure is below 3.5 in. hg.

OIL warning light is controlled by an oil pressure sensor switch incorporated in oil line to oil pressure gauge and is located at bulkhead. Sensor switch will activate when oil pressure is below 35 psi.

ALT warning light is illuminated by current flowing from bus bar to alternator circuit. This condition exists when alternator is not operating properly and output is zero. During normal operation, alternator warning circuit is also supplied with power from top diode terminal. This current flows through a 5 amp fuse, located above diode heat sink, to resistor and diode creating a no-flow condition which does not allow warning light to light.

OVERBST warning light used on PA-32R-301T is activated whenever engine manifold pressure reaches 35.5 to 35.8 inches of mercury. Manifold pressure sensor is incorporated in manifold pressure gauge.

FLAP annunciator (PA-32R-301 II HP only) lights whenever a new flap position is selected and remains on while the flaps are in transient

FLIGHT COMPARTMENT

ANNUNCIATOR PANEL (Cont.)

GEAR WARN annunciator (PA-32R-301 II HP only) will light whenever:

1. Power is reduced below approximately 14 inches of manifold pressure with the landing gear up.
2. Gear selector switch is in UP position while airplane is on ground with weight on wheels
3. Flaps are extended beyond approach position (10°) and landing gear is retracted.

Baggage door ajar and air conditioner door open annunciator lights (PA-32R-301 II HP only) are used when either of those options are installed.

The test button is used to check operation of lights when engine is running. Lights will work when engine is not running with master switch turned on.

– END –

EXTERIOR

LANDING/TAXI LIGHT

The landing and taxi light is contained in one light bulb. It is a 100 watt unit located within nose cowl section on PA-32R-301 SP and PA-32R-301T SP models. The light is located on the nose gear on PA-32R-301 II HP models. Light is controlled by a switch to a 10 amp circuit breaker. Three navigation lights are controlled by a single switch and a 10 amp circuit breaker. Optional anti-collision strobe lights may be mounted on each wing tip in same assembly with navigation lights. These units are rated to flash at approximately 50 times per minute.

REMOVAL AND INSTALLATION OF LANDING LIGHT

1. Remove screw securing clamp to bottom of lamp.
2. Pull lamp out and remove two electrical leads connected to it.

– NOTE –

Take note of wire placement on lamp to facilitate reinstallation.

3. To install lamp, reconnect electrical leads and insert lamp into position, then position clamp at bottom and secure with appropriate screw.

ANTI-COLLISION LIGHT (STROBE)

Lights are located at each wing tip in same assembly with navigation lights. They are rated to flash approximately 50 times a minute.

REMOVAL OF WING TIP STROBE LIGHT

1. Remove screw securing navigation light cover and remove cover.
2. Remove the three screws securing navigation light bracket assembly and pull out.
3. Remove strobe lamp by cutting wires on lamp beneath mounting bracket.
4. Remove defective lamp.
5. Remove and discard plug with cut wires from its electrical socket.

INSTALLATION OF WING TIP STROBE LIGHT

1. Route wires from new lamp down through hole in navigation light bracket.
2. Insert wire terminals in plastic plug supplied with new lamp. Wire according to schematic diagram located in back of this section. Connect plug to receptacle.
3. Position strobe lamp on navigation light bracket.
4. Secure navigation light assembly and bracket with appropriate screw.

LIGHTS (Cont.)

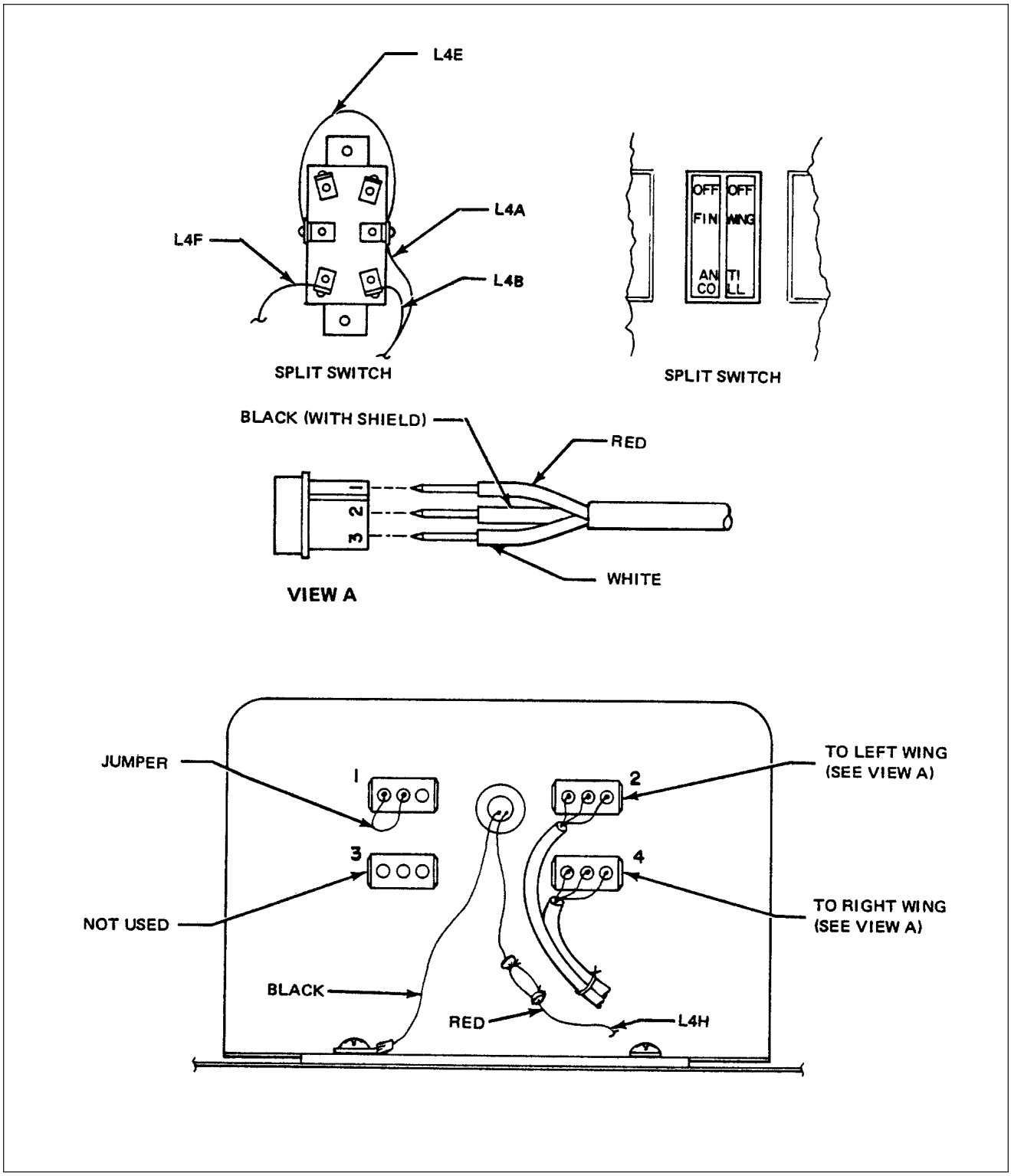

Strobe Light Connections
Figure 1

EXTERIOR (Cont.)

REMOVAL OF STROBE POWER SUPPLY

Strobe power supply is in aft section of fuselage.

1. Remove access panel to aft section of fuselage in rear baggage compartment to gain access to power supply.
2. To remove power supply disconnect electrical plugs. (One to four plugs depending on installation. Make note of placement of plugs to facilitate installation.)
3. Disconnect other electrical leads.

– NOTE –

Make note of placement of leads to facilitate installation.

4. Remove four screws securing power supply to fuselage. Power supply can now be removed.

INSTALLATION OF STROBE POWER SUPPLY (REFER TO FIGURE 33-1)

1. Position power supply in place and secure with four screws previously removed.
2. Reconnect electrical leads in their proper place.
3. Reconnect electrical plugs previously removed in their proper place.
4. Replace access panel in rear baggage compartment.

TROUBLESHOOTING PROCEDURE

Strobe light functions as a condenser discharge system. A condenser in the power supply is charged to approximately 450 volts DC then discharged across Xenon flash tube at intervals of approximately 50 flashes per minute. Condenser is parallel across the Xenon flash tube which is designated to hold off the 450 volts DC applied until flash tube is triggered by an external pulse. This pulse is generated by a solid state timing circuit in power supply.

When troubleshooting strobe light system, it must first be determined if trouble is in flash tube or power supply. Replacement of flash tube will confirm if tube is defective. A nomally operating power supply will emit an audible tone of 1 to 1.5 KHZ. If there is no sound emitted, check system according to the following instructions. When troubleshooting system, utilize appropriate schematic at back of this section.

1. Ascertain input voltage at power supply is 14 volts.

– CAUTION –

When disconnecting and connecting power supply input connections, do not get connections reversed. Reversed polarity of input voltage for just an instant will permanently damage power supply. Reversed polarity destroys a protective diode in power supply, causing self-destruction from overheating of power supply. This damage is sometimes not immediately apparent, but will cause failure of system in time.

EXTERIOR (Cont.)

TROUBLESHOOTING PROCEDURE (Cont.)

2. Check for malfunction in interconnecting cables.
   a. Ascertain pins 1 and 3 of interconnecting cables are not reversed.
   b. Using an ohmmeter, check continuity between pin 1 and 3 of interconnecting cable. If a reading is obtained on meter, cable is shorted and should be replaced.

– NOTE –

A short of type described in steps a. and b. will not cause permanent damage to power supply, but system will be inoperative if such a short exists. Avoid any connection between pins 1 and 3 of interconnecting cable as this will discharge condenser in power supply and destroy trigger circuits.

– CAUTION –

When disconnecting power supply, allow five minutes of bleed down time prior to handling unit.

3. Check interconnecting cables for shorts.
   a. Disconnect output cables from power supply outlets.
   b. The following continuity checks can be made with an ohmmeter.
   c. Check for continuity between connectors of each interconnecting cable by checking from pin 1 to pin 1, pin 2 to pin 2, and pin 3 to pin3. When making these checks if no continuity exists, cable is broken and should be replaced.
   d. Check continuity between pins 1 and 2, 1 and 3, 2 and 3 of interconnecting cable. If continuity exists between any of these connections, cable is shorted and should be replaced.
4. Check tube socket assembly for shorts.
   a. Disconnect tube socket assembly of anti-collision light from interconnecting cable.
   b. The following continuity checks can be made with an ohmmeter.
   c. Check for continuity between pin 1 of AMP connector to pin 1 of tube socket. Pin 2 of AMP connector to pins 6 and 7 of tube socket and pin 3 of AMP connector to pin 4 of tube socket. When making these tests, if no continuity exists, tube socket assembly is broken and should be replaced.

– END –

CHAPTER

34

NAVIGATION AND PITOT/STATIC

CHAPTER 34 - NAVIGATION AND PITOT/STATIC

TABLE OF CONTENTS/EFFECTIVITY

CHAPTER SECTION	SUBJECT	GRID NO.	EFFECTIVITY
34-00-00	NAVIGATION AND PITOT/STATIC	3E14	July 1, 1993
34-00-00	General	3E14	July 1, 1993
34-00-00	Description and Operation	3E14	July 1, 1993
34-00-00	Removal and Replacement of Face Mounted Instruments	3E14	July 1, 1993
34-00-00	Removal and Replacement of Cluster Mounted Instruments	3E14	July 1, 1993
34-00-00	Gyro Fitting Installation Procedure	3E16	July 1, 1993
34-10-00	FLIGHT INSTRUMENTS PITOT/STATIC	3E18	July 1, 1993
34-10-00	Vertical Speed Indicator	3E18	July 1, 1993
34-10-00	Sensitive Altimeter	3E19	July 1, 1993
34-10-00	Airspeed Indicator	3E20	July 1, 1993
34-20-00	ATTITUDE AND DIRECTION	3E22	July 1, 1993
34-20-00	Gyro Horizon	3E22	July 1, 1993
34-20-00	Directional Gyro	3E23	July 1, 1993
34-20-00	Magnetic Compass	3E23	July 1, 1993
34-20-00	Adjustment of Compass	3E24	July 1, 1993
34-20-00	Turn and Bank Indicator	3F1	July 1, 1993
34-40-00	INDEPENDENT POSITION DETERMINING	3F2	July 1, 1993
34-40-00	Radar System Installation (Optional)	3F2	July 1, 1993
34-40-00	Description	3F2	July 1, 1993
34-40-00	Maximum Permissible Exposure Level	3F2	July 1, 1993
34-40-00	Troubleshooting	3F2	July 1, 1993
34-40-00	Digital Indicator	3F5	July 1, 1993
34-40-00	Removal of Digital Indicator	3F5	July 1, 1993
34-40-00	Installation of Digital Indicator	3F5	July 1, 1993
34-40-00	Receiver-Transmitter-Antenna	3F5	July 1, 1993
34-40-00	Removal of Receiver-Transmitter-Antenna	3F5	July 1, 1993
34-40-00	Installation of Receiver-Transmitter-Antenna	3F5	July 1, 1993

NAVIGATION AND PITOT/STATIC

GENERAL

Instrument air system consists of pitot air and static air sources. System supplies both pitot and static air pressure for airspeed indictor, altimeter and vertical speed indicator. These instruments are face mounted.

DESCRIPTION AND OPERATION

Pitot air system consists of a pitot mast located on underside of left wing, with its related plumbing. Ram air pressure entering pitot is transmitted from pitot inlet through hose and tubing routed through wing to airspeed indicator on instrument panel. A partially or completely blocked pitot head will give erratic or zero reading on instruments.

Static air system consists of a static port located on bottom of pitot mast. Static port is directly connected to airspeed indicator, altimeter and rate of climb indicator on instrument panel by means of hose and tubing routed through wing along with pitot line. An alternate static air source is located below instrument panel in front of pilot. Alternate static source is part of standard system and has a shutoff valve which closes port when it is not needed. A placard giving instructions for use is located on instrument panel. Pitot and static lines can be drained through separate drain valves located on left lower side of fuselage interior.

REMOVAL AND REPLACEMENT OF FACE MOUNTED INSTRUMENTS

Since all instruments are mounted in a similar manner in PA-32R-301 SP and PA-32R-301T SP , a description of a typical removal and installation is provided as a guide for removal and installation of instruments in those model airplanes. Special care should be taken when any operation pertaining to instruments is performed.

1. Remove face panel by removing screws from around perimeter of panel.
2. With face panel removed, mounting screws for individual instruments will be exposed. Remove connections to instrument prior to removing mounting screws of instrument to be removed.

– NOTE –

Tag instrument connections for ease of installation.

3. Installation of instruments will be completed by reversing instructions. After instal- lation is completed and before replacing instrument face panel, check all components for security and clearance of control column.

Instruments installed in PA-32R-301 II HP airplanes are back mounted on a solid metal instrument panel. These instruments must be removed from the back of the panel.

REMOVAL AND REPLACEMENT OF CLUSTER MOUNTED INSTRUMENTS

A cluster, located on instrument panel, contains five individual instruments. Removal of these instruments can be accomplished by the following procedure:

1. Remove face panel by pulling panel free from retainers.
2. With face panel removed, clear plastic cover on cluster assembly will be exposed. Remove cover and cluster by removing two mounting screws.
3. Remove connection to individual instrument to be removed and remove instrument from cluster assembly.
4. Replace instruments by reversing removal instructions. Check all mountings and connections for security.

NAVIGATION AND PITOT/STATIC (Cont.)

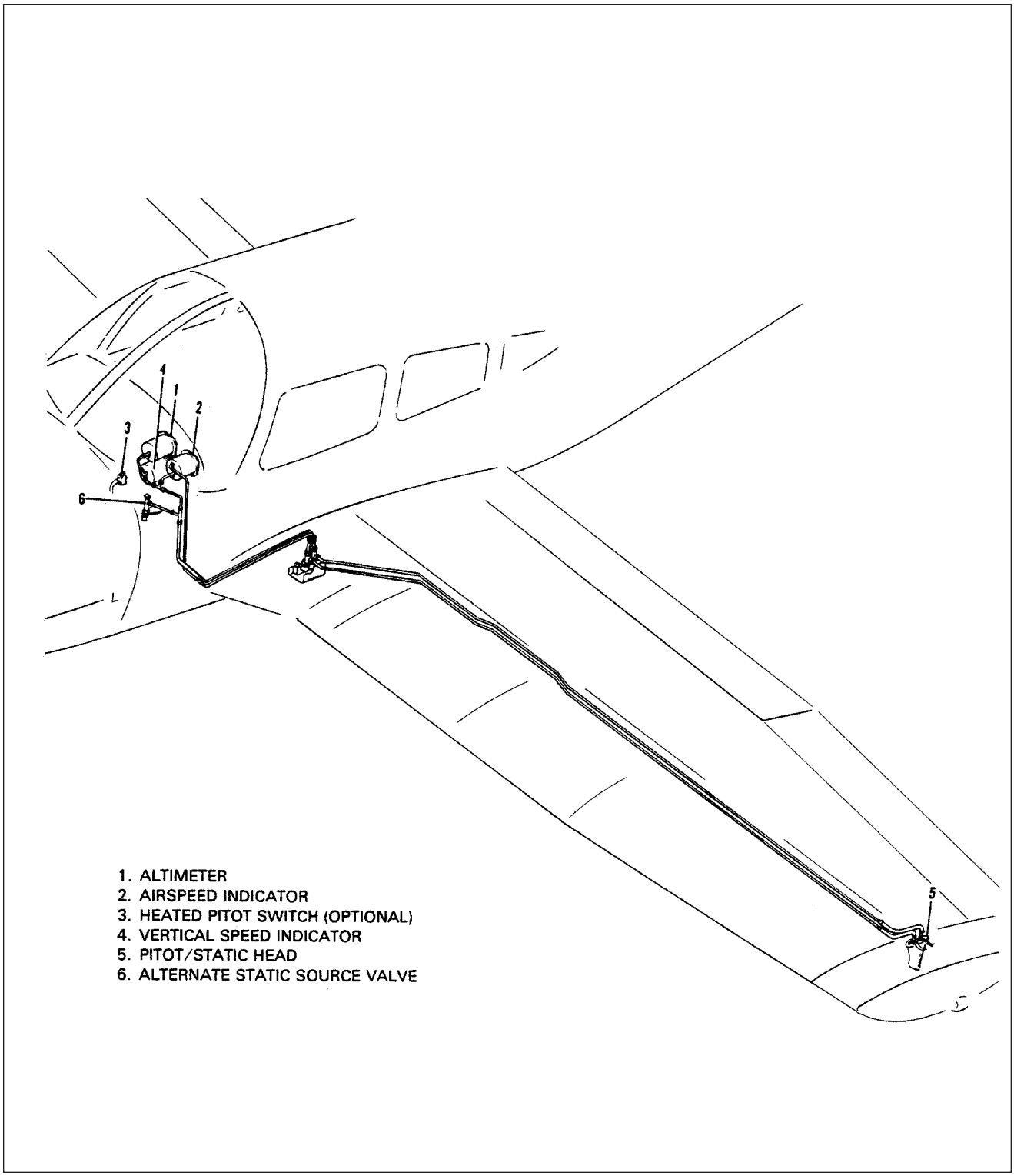

Pitot-Static System Installation
Figure 1

NAVIGATION AND PITOT/STATIC (Cont.)

GYRO FITTING INSTALLATION PROCEDURE

Use of teflon tape on fitting threads is recommended and should be installed as follows:

– CAUTION –

Permit no oil, grease, pipe compound or any foreign material to enter parts prior to installation of fittings. Make sure that all air lines are clean and free of foreign particles and/or residue before connecting lines to gyro. DO NOT USE THREAD LUBE ON FITTINGS OR IN PORTS. Use of thread lube can cause contamination shortening life of gyro and can cause premature failure. Any evidence of the use of thread lube will create a WARRANTY VOID CONDITION.

1. Carefully lay teflon tape on fitting threads allowing one thread to be visible from end of fitting. Hold place and wrap in direction of threads so tape will remain tight when fitting is installed.
2. Apply sufficient tension while winding to assure that tape forms into thread grooves (one full wrap plus 1/2 inch overlap is sufficient).
3. After wrap is complete, maintain tension and tear tape by pulling in direction of wrap. Resulting ragged end is key to tape staying in place.
4. Press tape well into threads.
5. Screw fitting into port, being careful not to exceed torque requirements as noted on decal located on cover of gyro. (Refer to Chart 9105 for specifications and manufacturer's address.)

– END –

INTENTIONALLY LEFT BLANK

FLIGHT INSTRUMENTS PITOT/STATIC

VERTICAL SPEED INDICATOR

Vertical speed indicator measures rate of change in static pressure when airplane is climbing or descending. By means of a pointer and dial this instrument will indicate a rate of ascent or descent of airplane in feet per minute. But due to lag of the instrument, aircraft will be climbing or descending before instrument starts to read and instrument will continue to read after aircraft has assumed level flight. In rough air this should not be considered a malfunction.

CHART 1
TROUBLESHOOTING VERTICAL SPEED INDICATOR

Trouble	Cause	Remedy
Pointer does not set on zero.	Aging of diaphragm.	Reset pointer to zero by means of setting screw. Tap instrument while resetting.
Pointer fails to respond.	Obstruction in static line.	Disconnect all instruments connected to the static line. Clear line.
	Pitot head frozen over.	
	Water in static line.	Check individual instrments for obstruction in lines.
	Obstruction in pitot head.	Clean lines and head.
Pointer oscillates.	Leak in static lines.	Disconnect all instruments connected to the static line. Check individual instrments for leaks. Reconnect instruments to static line and test installation for leaks.
	Defective mechanism.	Replace instrument.
Vertical speed indicates when aircraft is banked.	Water in static line.	Disconnect static lines and blow out lines from cockpit out to pitot head.
Pointer has to be set before every flight.	Temperature compensator inoperative.	Replace instrument.
Pointer cannot be reset to zero.	Diaphragm distorted.	Replace instrument.
Instrument reads very low during climb or descent.	Case of instrument broken or leaking.	Replace instrument.

– NOTE –

When any connections in static system are opened for checking, system must be rechecked per F.A.R. 23.1325.

FLIGHT INSTRUMENTS PITOT/STATIC (Cont.)

SENSITIVE ALTIMETER

The altimeter indicates pressure altitude in feet above sea level. Indicator has three pointers and a dial scale; long pointer is read in hundreds of feet, middle pointer in thousandths of feet and short pointer in ten thousandths of feet. A barometric pressure window is located on right side of indicator dial is set by knob located on lower left corner of instrument. Altimeter consists of a sealed diaphragm that is connected to pointers through a mechanical linkage. Instrument case is vented to static air system and as static air pressure decreases, diaphragm expands, causing pointers to move through mechanical linkage.

CHART 2
TROUBLESHOOTING ALTIMETER (Sheet 1 of 2)

Trouble	Cause	Remedy
Excessive scale error.	Improper calibration adjustment.	Replace instrument.
Excessive pointer oscillation.	Defective mechanism.	Replace instrument.
High or low reading. sure	Improper venting.	Eliminate leak in static pres- system and check alignment of airspeed tube.
Setting knob is hard to turn.	Wrong lubrication or lack of lubrication.	Replace instrument.
Inner reference marker fails to move when setting knob is rotated.	Out of engagement.	Replace instrument.
Setting knob set screw loose or missing.	Not tight when altimeter was reset.	Tighten instrument screw, if loose.Replace instrument, if screw is missing.
Cracked or loose cover glass.	Case gasket hardened.	Replace instrument.
Dull or discolored markings.	Age.	
Barometric scale and reference markers out of synchronism.	Slippage of mating parts.	Replace instrument.
Barometric scale and reference markers out of synchronism with pointers.	Drift in mechanism.	Refer to the latest revision of AC43.13-1.
Altimeter sticks at altitude or does not change with change of altitude.	Water or restriction in static line.	Remove static lines from al instruments, blow line clear from cockpit to pitot head.

FLIGHT INSTRUMENTS PITOT/STATIC (Cont.)

CHART 2
TROUBLESHOOTING ALTIMETER (Sheet 2 of 2)

Trouble	Cause	Remedy
Altimeter charges reading as aircraft is banked	Water in static line.	Remove static lines from all instruments, and blow line clear from cockpit to pitot head.
Altimeter requires resetting frequently.	Temperature compensator inoperative.	Change instrument.

– NOTE –

When any connections in static system are opened for checking, system must be rechecked per F.A.R. 23.1325.

AIRSPEED INDICATOR

The airspeed indicator provides a means of indicating speed of airplane passing through air. Airspeed indication is differential pressure reading between ram air to pressure and static air pressure. This instrument has diaphragm vented to pitot air source and case is vented to static air system. As airplane increases speed, pitot air pressure increases, causing diaphragm to expand. A mechanical linkage picks up this motion and moves instrument pointer to indicated speed. Instrument dial is calibrated in knots, and also has necessary operating range markings for safe operation of airplane.

CHART 3
TROUBLESHOOTING AIRSPEED TUBES AND INDICATOR

Trouble	Cause	Remedy
Pointers of stick instruments do not indicate properly.	Leak in instrument case or in pitot lines.	Check for leak and seal.
Pointer of instrument oscillates.	Defective mechanism.	Replace instrument.
Instrument reads high.	Pointer not on zero.	Replace instrument.
	Leaking static system.	Find leak and correct.
Instrument reads low.	Pointer not on zero.	Replace instrument.
	Leaking static system.	Find leak and correct.
	Pitot head not aligned correctly.	Realign pitot head.
Airpeed changes as aircraft is banked.	Water in pitot line.	Remove lines from static - instruments and blow out lines from cockpit to pitot head.

– NOTE –

When any connections in static system are opened for checking, system must be rechecked per F.A.R. 23.1325.

INTENTIONALLY LEFT BLANK

ATTITUDE AND DIRECTION

GYRO HORIZON

Gyro horizon is essentially an air driven gyroscope rotating in a horizontal plane and is operated by same principal as directional gyro. Due to gyroscopic inertia, spin axis continues to point in vertical direction, providing a constant visual reference to attitude of airplane relative to pitch and roll axis. A bar across face of indicator represents horizon and aligning miniature airplane to horizon bar simulates alighnent of airplane to acutal horizon. Any deviation simulates deviation of airplane from true horizon. Gyro horizon is marked for different degrees of bank.

CHART 4
TROUBLESHOOTING GYRO HORIZON INDICATOR

Trouble	Cause	Remedy
Bar fails to respond.	Insufficient vacuum.	Check pump and tubing.
	Filter dirty.	Clean or replace filter.
Bar does not settle.	Insufficient vacuum.	Check line and pump. Adjust valve.
	Incorrect instrument.	Check part number.
	Defective instrument.	Replace.
Bar oscillates or shimmies continuously.	Instrument loose in panel.	Tighten mounting screws.
	Vacuum too high.	Adjust valve.
	Defective mechanism.	Replace instrument.
Instrument does not indicate level flight.	Instrument not level in panel.instrument.	Loosen screws and level
	Aircraft out of trim.	Trim aircraft.
Bar high after 180° turn.	Normal, if it does not exceed 1/16 inch.	
Instrument tumbles in flight.	Low vacuum.	Reset regulator.
	Dirty filter.	Clean or replace filter.
	Line to filter restricted.	Replace line.
	Plug missing or loose in instrument.	Replace or tighten plug.

ATTITUDE AND DIRECTION (Cont.)

DIRECTIONAL GYRO

Directional gyro is a flight instrument incorporating an air driven gyro stabilized in vertical plane. Gyro is rotated at high speed by lowering pressure in air tight case and simultaneously allowing atmospheric air pressure to enter instrument against gyro buckets. Due to gyroscopic inertia, spin axis continues to point in same direction even though aircraft yaws to right or left. This relative motion between gyro and instrument case is shown on instrument dial which is similar to a compass card. Dial, when set to agree with airplane magnetic compass, provides a positive indication free from swing and turning error. However, directional gyro has no sense of direction and must be set to magnetic compass. Since magnetic compass is subject to errors due to magnetic fields, electric instruments, etc, directional gyro is only accurate for heading it has been set for. If gyro is set on 270°, for instance, and aircraft is turned to some other heading, there can be a large error between gyro and magnetic compass due to error in compass compensation. This will appear as gyro precession. Gyro should only be checked to heading on which it was first set. Due to internal friction, spin axis error, air turbulence and airflow, gyro should be set at least every 15 minutes for accurate operation, whether it has drifted or not.

CHART 5
TROUBLESHOOTING DIRECTIONAL GYRO INDICATOR

Trouble	Cause	Remedy
Excess drift in either direction.	Setting error.	Review paragraph titled "General" for gyro operation.
	Defective instrument.	Replace instrument.
	High or low vacuum. If vacuum is not correct, check for the following:	
	1. Relief valve improperly adjusted.	1. Adjust.
	2. Incorrect gauge reading.	2. Replace gauge.
	3. Pump failure.	3. Repair or replace.
	4. Vacuum line kinked or leaking.	4. Check and repair. Check for collapsed inner wall of hose.
Dial spins during turn.	Limits (55° bank) of gimbal exceeded.	Recage gyro in level flight.
Dial spins continuously.	Defective mechanism	Replace.

MAGNETIC COMPASS

Magnetic compass is a self-contained instrument. This instrument has an individual light which is connected to instrument lighting circuit. Compass correction card is located in card holder mounted on instrument. Compass should be swung whenever instruments or radios are changed and at least once a year.

ATTITUDE AND DIRECTION (Cont.)

ADJUSTMENT OF COMPASS

Before attempting to compensate compass, every effort should be made to place aircraft in simulated flight conditions; check to see that doors are closed, flaps in retracted position, engine running, throttle set at cruise position and aircraft in level flight attitude. Aircraft master switch, alternator switch and all radio switches should be in ON position. All other cockpit controlled electrical switches should be in OFF position.

– NOTE –

Use a non-magnetic screwdriver to adjust magnetic compass

1. Set adjustment screws of compensator on zero. Zero position of adjusting screws is when dot of screw is lined up with dot of frame.
2. Head aircraft on a magnetic North heading. Adjust N-S adjustment screw until compass reads exactly North.
3. Head aircraft on a magnetic East heading and do same as Step 2, adjusting E-W adjusting screw.
4. Head aircraft on a magnetic South heading and note resulting South error. Adjust N-S adjusting screw until one-half of this error has been removed.
5. Head aircraft on magnetic West and do same as Step 4, adjusting E-W adjustment screw.
6. Head aircraft in successive magnetic 30° headings and record compass readings on appropriate deviation card. Deviations must not exceed ± 10° on any heading.

CHART 6
TROUBLESHOOTING MAGNETIC COMPASS (Sheet 1 of 2)

Trouble	Cause	Remedy
Excessive card error.	Compass not properly compensated.	Compensate instrument.
	External magnetic interference.	Locate magnetic interference and eliminate if possible.
Excessive card oscillation.	Insufficient liquid.	Replace instrument.
Card sluggish.	Weak card magnet.	Replace instrument.
	Excessive pivot friction or broken jewel.	Replace instrument.
Liquid leakage.	Loose bezel screws.	Replace instrument.
	Broken cover glass.	Replace instrument.
	Defective sealing gaskets.	Replace instrument.
Discolored markings.	Age	Replace instrument.
Defective light.	Burned out lamp or broken	Check lamp or continuity of circuit.wiring.
Card sticks.	Altitude compensating diaphragm collapsed.	Replace instrument.

ATTITUDE AND DIRECTION (Cont.)

CHART 6
TROUBLESHOOTING MAGNETIC COMPASS (Sheet 2 of 2)

Trouble	Cause	Remedy
Card does not move when compensating screws are turned.	The gears that turn compensating magnets are stripped.	Replace instrument.
Compass swings erratically when radio transmitter is keyed.	Normal.	

TURN AND BANK INDICATOR

Turn and bank indicator is electric. Turn portion of indicator is a gyroscope, while bank portion of indicator is a ball sealed in a curved glass tube filled with damping fluid. There are two styles of this unit. The first is old style with a vertical needle in center of dial. This instrument reads only rate of turn, and unless aircraft is turning, needle will not move regardless of bank angle. The other style is turn coordinator which indicates both ***rate*** of turn and ***rate*** of roll. With this indicator, if aircraft is rolled right and left rapidly, indicator will move, indicating a turn. But, if aircraft is held in a bank, and opposite rudder is applied, indicator will come back to zero indicating no turn.

CHART 7
TROUBLESHOOTING (TURN AND BANK INDICATOR)

Trouble	Cause	Remedy
Pointer fails to respond.	Foreign matter lodged in instrument.	Replace instrument.
Incorrect sensitivity.	Out of calibration.	Replace instrument.
Incorrect turn rate (electric).	Out of calibration. Aircraft not in coordinated turn.	Replace instrument. Center ball in turn.
Ball sticky.	Flat spot on ball.	Replace instrument.
Ball not in center when aircraft is correctly trimmed.	Instrument not level in panel.	Level instrument.
Instrument will not run (electric).	No power to instrument. Instrument malfunction.	Check circuit and repair. Replace instrument.

INDEPENDENT POSITION DETERMINING

RADAR SYSTEM INSTALLATION (OPTIONAL) (Refer to Figure 2)

An RCA Weatherscout I monochromatic digital weather radar system is available as an optional equipment installation. This system is capable of detecting storms along aircraft flight path and gives pilot a visual indication of storm intensity.

– NOTE –

This radar system performs ONLY the function of weather detection. It should NOT be used, nor relied upon, for purpose of proximity warning or anti-collision protection.

DESCRIPTION

Radar system is composed of an instrument panel mounted RCA DI-1001 Monochromatic Digital Indicator and a starboard-wing-mounted RCA RTA-1001 receiver-transmitter-antenna.

Digital indicator contains a rectangular five inch (12,7 cm) TV-type cathode ray tube (CRT) and its associated high- and low-voltage power supplies, video and cyclic contour circuits, range and azimuth marks and sweep circuits, control logic and solid-state memory, and operating controls for radar system.

Receiver-transmitter-antenna (RTA) is designed for internal wing mounting. Major assemblies of RTA are modulator, IF/AFC programmer, antenna drive, magnetron, mixer, local oscillator and arabolic antenna.

For a complete system functional description of digital indicator and RTA, refer to WeatherScout System Description and Installation Manual, RCA P/N IB8023100 available from RCA Avionics Systems, 8500 Balboa Blvd., Van Nuys, California 91409.

A source of external air acts as a safety feature to provide vapor contamination control of RTA compartment. A time delay circuit within RTA unit provides a four and a half minute electrical delay which ensures adequate time for purging of air from compartment before power is applied to radar system. RTA time-delay is activated by an engine mounted Hobbs meter switch which in turn is activated by engine oil pressure upon engine start.

MAXIMUM PERMISSIBLE EXPOSURE LEVEL

When transmitting, dangerous levels of RF energy are present within Maximum Permissible Exposure Level (MPEL) boundary. In order to avoid this envelope in which radiation level exceeds U.S. Government standard of ten milliwatts per square centimeter, all personnel should remain beyond distance indicated in Figure 3.

TROUBLESHOOTING

For detailed troubleshooting procedures, refer to RCA WeatherScout I maintenance manual P/N: IB8023101.

INDEPENDENT POSITION DETERMINING (Cont.)

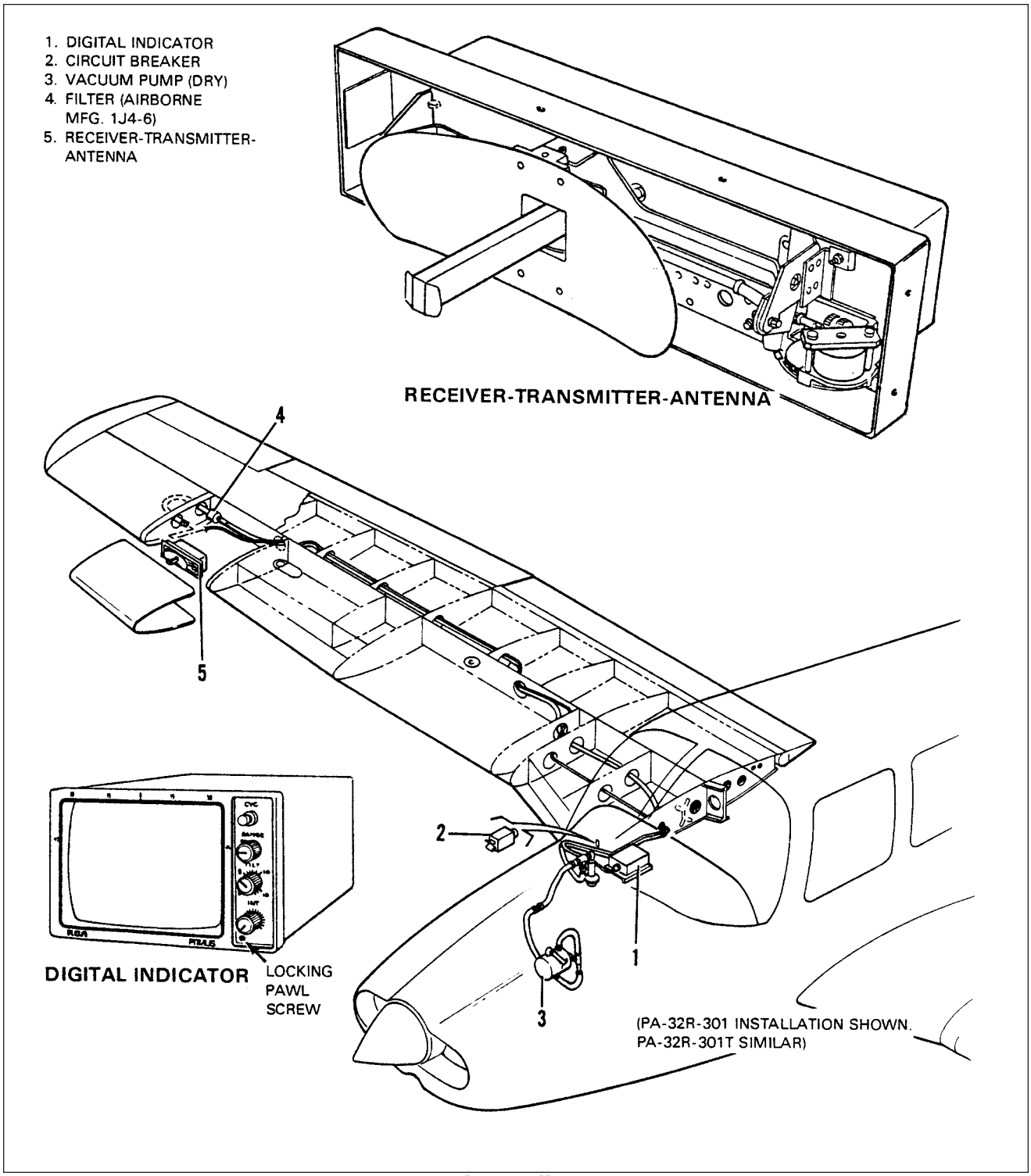

Radar Installation
Figure 2

INDEPENDENT POSITION DETERMINING (Cont.)

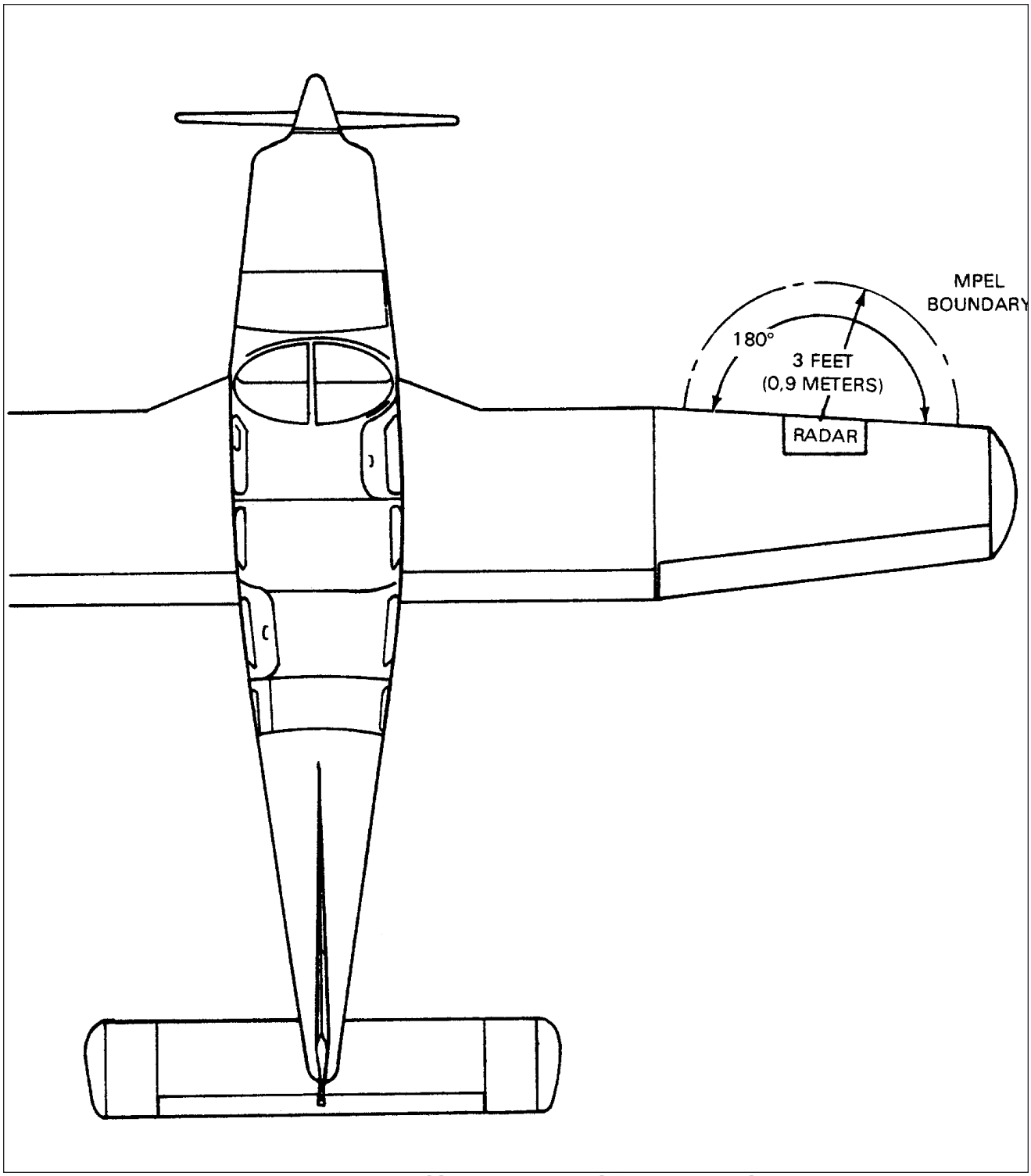

Maximum Permissible Exposure Level (MPEL) Boundary
Figure 3

INDEPENDENT POSITION DETERMINING (Cont.)

DIGITAL INDICATOR

REMOVAL OF DIGITAL INDICATOR

1. Insure that Master Battery switch is in OFF position.
2. Pull RADAR circuit breaker.
3. Turn locking pawl screw, located on lower right portion of indicator, counterclockwise. (Refer to Figure 2 for location of locking pawl screw.)
4. Slide unit out of mounting tray.
5. Disconnect cable from rear of unit.

INSTALLATION OF DIGITAL INDICATOR

1. Insure that Master Battery switch is in OFF position.
2. Pull RADAR circuit breaker.
3. Connect cable at rear of unit.
4. Slide unit into mounting tray, engaging two pins at rear of tray.
5. Turn locking pawl screw clockwise until unit is firmly seated.

RECEIVER-TRANSMITTER-ANTENNA

REMOVAL OF RECEIVER-TRANSMITTER-ANTENNA

1. Remove 38 screws (AN 509-8R8) which secure radome to wing and remove radome.
2. Remove eight bolts which secure RTA to its mounting structure. Withdraw RTA unit until electrical connector and air vent tubing are accessible. Disconnect air vent tubing and electrical connector and remove RTA unit from wing.

INSTALLATION OF RECEIVER-TRANSMITTER-ANTENNA

1. Place RTA unit in opening in wing. Connect electrical connector and air vent tubing.
2. Position RTA unit on mounting structure and secure with eight bolts (AN 3-3A) previously removed. Ensure RTA unit has been set to correct dihedral setting (level with ground) and is mounted top side up. (Refer to RCA WeatherScout I Installation Manual IB8023100.)
3. Seal around RTA unit from behind (by reaching through access openings in adjoining wing compartments) with RTV silicone sealer so as to prevent any fuel vapors from entering RTA unit.
4. Install radome into wing opening utilizing screws previously removed. Tighten all screws and torque to standard specifications.
5. Seal around edge of radome with zinc chromate putty. Lightly hand-sand and paint.

– CAUTION –

Do not use metallic paints or heavy coats of paint on fiberglass radome as this will reduce radar transmission efficiency and range.

– END –

INTENTIONALLY LEFT BLANK

INTENTIONALLY LEFT BLANK

CHAPTER

35

OXYGEN

CHAPTER 35 - OXYGEN

TABLE OF CONTENTS/EFFECTIVITY

CHAPTER SECTION	SUBJECT	GRID NO.	EFFECTIVITY
35-00-00	OXYGEN	3F10	July 1, 1993
35-00-00	General	3F10	July 1, 1993
35-00-00	Description and Operation	3F10	July 1, 1993
35-00-00	Troubleshooting	3F11	July 1, 1993
35-10-00	CREW PASSENGER SYSTEMS	3F12	July 1, 1993
35-10-00	Fixed Oxygen System	3F12	July 1, 1993
35-10-00	Inspection and Maintenance	2I23	July 1, 1993
35-10-00	Cleaning and Purging of Oxygen System Components	3F18	July 1, 1993
35-10-00	Swageloc Fitting Installations	3F19	July 1, 1993
35-10-00	Application of Teflon Tape Thread Sealant	3F19	July 1, 1993
35-10-00	Leak Tests	3F20	July 1, 1993
35-10-00	Oxygen System Component Handling	3F21	July 1, 1993
35-10-00	Oxygen Cylinder	3F21	July 1, 1993
35-10-00	Removal of Oxygen Cylinder	3F21	July 1, 1993
35-10-00	Removal of Recharge Valve	3F22	July 1, 1993
35-10-00	Installation of Recharge Valve	3F22	July 1, 1993
35-10-00	Installation of Oxygen Cylinder	3F22	July 1, 1993
35-10-00	Pressure Gauge	3F23	July 1, 1993
35-10-00	Removal and Installation of Pressure Gauge	3F23	July 1, 1993
35-10-00	Outlets	3F23	July 1, 1993
35-10-00	Removal of Outlets	3F23	July 1, 1993
35-10-00I	Installation of Outlets	3F23	July 1, 1993
35-10-00	Oxygen ON/OFF Control	3F24	July 1, 1993
35-10-00	Removal and Installation of Oxygen ON/OFF Control	3F24	July 1, 1993
35-10-00	Refilling Oxygen System	3F24	July 1, 1993
35-10-00	PORTABLE OXYGEN SYSTEM	3G2	July 1, 1993
35-10-00	Removal of Oxygen Unit	3G2	July 1, 1993
35-10-00	Inspection and Overhaul Time	3G2	July 1, 1993
35-10-00	Testing for Leaks	3G3	July 1, 1993
35-10-00	Maintenance	3G3	July 1, 1993
35-10-00	Outlets	3G4	July 1, 1993
35-10-00	Removal of Outlets	3G4	July 1, 1993
35-10-00	Installation of Outlets	3G4	July 1, 1993
35-10-00	Purging Oxygen System	3G4	July 1, 1993
35-10-00	Cleaning of Face Masks	3G4	July 1, 1993

OXYGEN

GENERAL

The purpose of the following information is to provide supplemental information for servicing of oxygen systems. Major repairs to oxygen systems should be accomplished by an approved shop.

When refilling any oxygen cylinder make sure to use only aviation breathing oxygen as specified in MIL-O-227210C. The moisture content of aviation oxygen cannot exceed 0.005 milligrams of water vapor per liter of gas at 70°F and 29.92 inches of mercury.

DESCRIPTION AND OPERATION

Fixed or portable oxygen systems are available for this aircraft, with major components manufactured by Scott Aviation. It is therefore recommended that Scott Aviation as well as Piper Customer Services be contacted for any further information not covered herein.

Fixed oxygen system uses a 3AA1800, 63.5 cu. ft. cylinder. Cylinder, mounted in tailcone behind baggage compartment, is connected to an external fill valve mounted to left side of fuselage, aft of fuselage bulkhead station 222.437. Manifold for outlets is arranged with tank feed line attached to a tee fitting on right rear passenger's outlet, and from where other outlets are fed, see Figure 1. Push-pull control is provided by a knob on overhead panel, to left of fresh air duct control. A gauge for displaying tank pressure is mounted in overhead duct behind passengers, and is lighted by a post light.

Portable oxygen system is made up of two Scott units each involving a 22 cu. ft. capacity 3AA1800 cylinder. Each tank is incorporated in a case which utilizes a dual manifold, permitting four masks to be used (per unit) with dual connectors at each outlet.

– WARNING –

Do not use grease or any type of grease fitting on any oxygen system. When working with an oxygen system make sure hands, clothing, tools and immediate area are free of grease.

– NOTE –

Oxygen cylinders are identified by ICC or DOT identification stamped on cylinder. Standard weight cylinder (ICC or DOT 3AA1800) must be hydrostatically tested every 5 years. Month and year of last test is stamped beneath ICC/DOT identification.

– NOTE –

When installing oxygen Kit no. 802180-05, a boom mike swich is required to replace the lap mike switch.

OXYGEN

TROUBLESHOOTING

CHART 1
TROUBLESHOOTING (OXYGEN SYSTEM)

Trouble	Cause	Remedy
No indication of pressure on pressure gauge.	Cylinder empty or leak in system has exhausted pressure.	Charge system and check for leaks. Purge, charge, and check system for leaks
	Pressure gauge or regulator defective.	Return unit to manufacturer or take to approved shop.(2) Replace gauge.(1)
Pressure indication normal but no oxygen flowing.	Oxygen cylinder regulator assembly defective.	Return unit to manufacturer or take to approved shop.(2) Remove tank and have regulator removed.(1)
Offensive odors in oxygen.	Cylinder pressure below 50 psi. Foreign matter has entered the system during previous servicing.	Purge the oxygen system.
NOTES: (1) Fixed system only. (2) Portable system only.		

CREW/PASSENGER OXYGEN SYSTEMS

– CAUTION –

Do not attempt to tighten any connections while system is charged.

– CAUTION –

Bottles which have been evacuated to 5 psi for a significant length of time, or those that do not produce an audible hissing sound when valve is cracked, should be removed and hydrostatically tested. If either of these conditions has existed for a significant length of time it is also recommended that system be purged.

– CAUTION –

Make sure there is no oil, grease, hydraulic fluid, or fuel in vicinity of any fittings being serviced.

– CAUTION –

Do not use thread lubricants of any kind. Teflon tape (3M No. 48) should be used on TAPERED pipe threads without tape extending beyond first thread, refer to affective information in this chapter.

– CAUTION –

Before working with system make sure aircraft is electrically grounded, and your hands and clothes are free of oil, grease, and dirt.

FIXED OXYGEN SYSTEM

INSPECTION AND MAINTENANCE

Due to nature of process used to tests compressed gas tanks, servicing and hydrostatic test must be conducted by a DOT or manufacturer (Scott Aviation) approved shop. The following material gives recommended inspection and maintenance information for various parts of oxygen systems.

CREW/PASSENGER OXYGEN SYSTEMS (Cont.)

INSPECTION AND MAINTENANCE (Cont.)

– NOTE –

Oxygen cylinders are identified by ICC or DOT identification stamped on cylinder. Standard weight cylinder (ICC or DOT 3AA1800) must be hydrostatically tested at end of each 5 year period. Lightweight cylinders (ICC or DOT 3HT 1850) must be tested every 3 years and be replaced after 4380 refills or 24 years, whichever comes first. Month and year of last test should be stamped on cylinder beneath ICC, DOT identification.

1. Check outlets for leakage both in use and non-use condition, and for leakage around an inserted connector. For leak testing information refer to appropriate subject in this chapter.
2. Check high pressure gauge for accuracy by comparing its indicated pressure with that of a gauge of known accuracy connected to fill port.

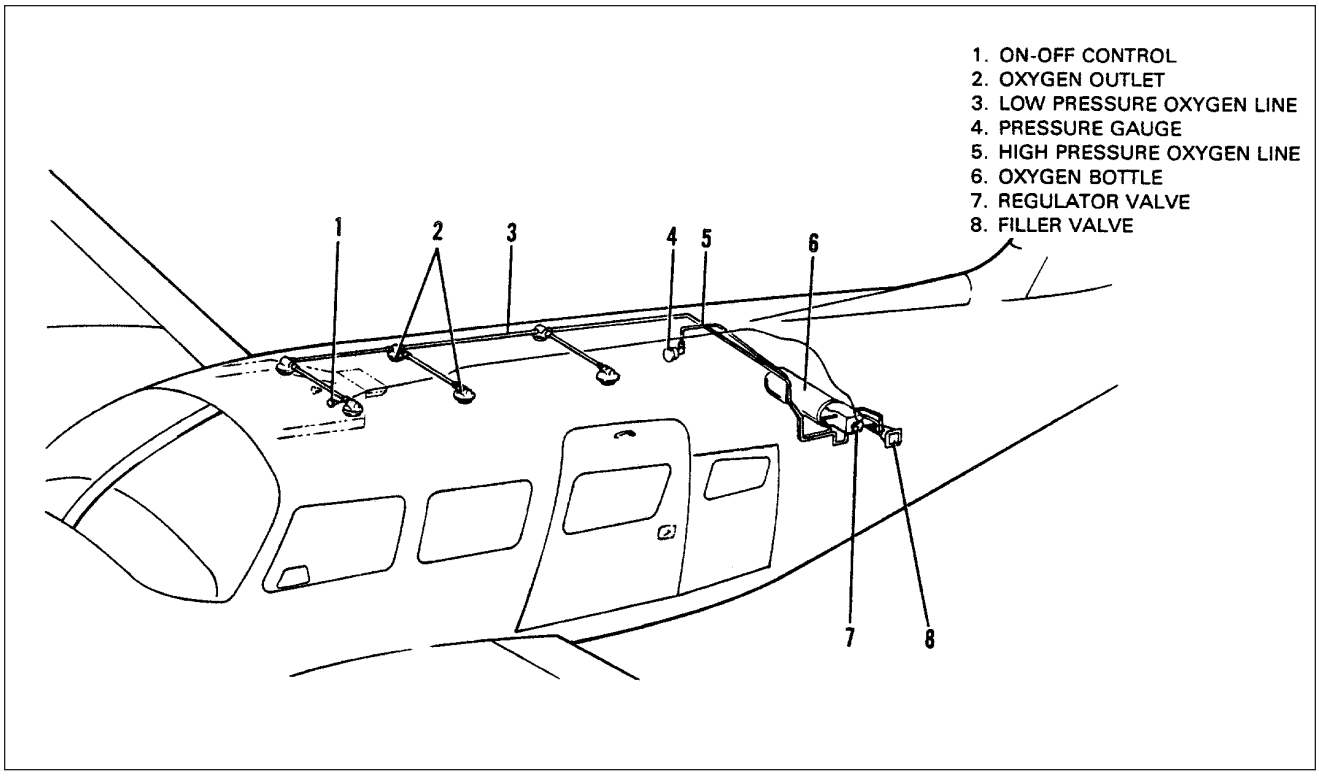

Fixed Oxygen System Installation
Figure 1

CREW/PASSENGER OXYGEN SYSTEMS (Cont.)

INSPECTION AND MAINTENANCE (Cont.)

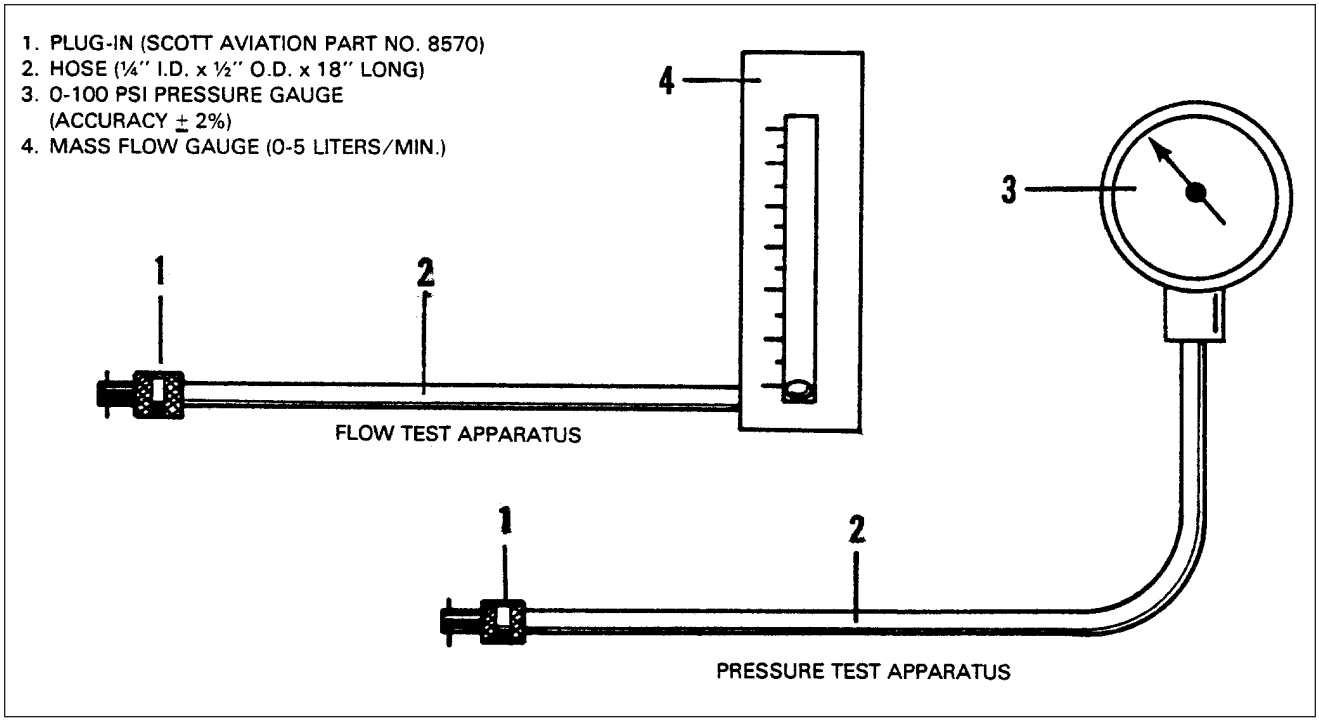

Test Apparatus for Testing Oxygen System
Figure 2

3. Inspect tank or dents, bulges, corrosion, and major strap chaing marks. Should any of these problems exist, tank should be removed and hydrostatically tested.
4. An operational check of regultor can be accomplished as follows: (Refer to Figure 2.)
   a. Interconnect a sensitive pressure gauge of a range o 0 to 100 psi, with a Scott Aviation 8570-00 plug-in, and connect apparatus to pilot's outlet in overhead panel. It is recommended that a hose of 1/4 in. ID x 1/2 in. OD and 18 inches long be used.
   b. Interconnect a pneumatic low apparatus of a range o 0 - 5 liters per min (1 pm.), with a Scott Aviation 8570-00 plug-in. Use same hose dimensions as explained in last step. Connect low apparatus to co-pilot's outlet.
   c. Insert a Scott plug-in in each of other outlets and pull oxygen control knob to on position. Pressure and low should be 55 to 80 psi and 3.3 to 5.3 1 pm. respectively, at sea level.
   d. There should be no external leakage anywhere on regulator when it is turned off, and all fittings leak free.
5. Check airframe logbook or last maintenance on oxygen system and perorm as required per Chart 2.
6. Test oxygen for odor. Pure oxygen is odorless and tasteless. Any system having a signiicant odor present in gas should be purged and bottle replaced or removed and purged.
7. Any fittings, connectors, and tubes which have imperect threads, pitted or disigured cones, or other damage should be replaced.

CREW/PASSENGER OXYGEN SYSTEMS (Cont.)

INSPECTION AND MAINTENANCE (Cont.)

– CAUTION –

Oxygen tubes must not be clamped to, or supported by electrical wire bundles, hydraulic, pneumatic or other lines.

8. Check plumbing or kinking, cracks, gouges, dents, deep scratches, or other damage; and, replace as necessary.
9. Make sure to check oxygen lines or proper clearance as follows: (Reer to Figure 3.)
   a. Two inch minimum between oxygen tubes and all flexible moving parts of aircraft (flexible control cables, etc). If enough space cannot be attained, protection from abrasion must be provided.
   b. At least 1/2 inch minimum between oxygen tubes and all rigid moving parts of aircrat such as levers and rigid control rods.
   c. Six inch minimum separation between oxygen tubes and hydraulic, fuel, and electrical system lines and components.
      (1) When six inch requirement cannot be complied with, one inch is allowed as long as electrical cables and other lines are supported at least every two inches; and, oxygen tubes(s) is protected by rubber neoprene hose fastened in place with cable ties at location specific item crosses or is near oxygen tube(s). If an item is near oxygen tube for a certain distance oxygen tube for that distance must be covered.

d. A minimum of 1/8 inch between tubing and structure adjoining supporting clamp as shown in Figure 3, sketch A.
e. Where a tube passes through a grommet, tube must not bear on grommet in any way that might cause cutting of grommet in service as shown in Figure 3, sketch D.
f. While in service, items may receive vibrations causing them to come in contact with other parts of aircraft. With this in mind, low pressure tubing that is supported well enough to prevent relative motion must have at least a minimum clearance of 1/8 inch from a projector (bolt, nut, etc). Low pressure tubing that cannot be supported well enough to prevent motion must have a minimum clearance of 1/8 inch allowed after maximum travel of tube. High pressure lines are affected similarly but require 1/2 inch minimum clearances. (Refer to Figure 3, sketch B.)

10. Perform any other required maintenance as directed in AC 43.13-1A, chapter 8.
11. Clean components as necessary per following subject-paragraph.

CREW/PASSENGER OXYGEN SYSTEMS (Cont.)

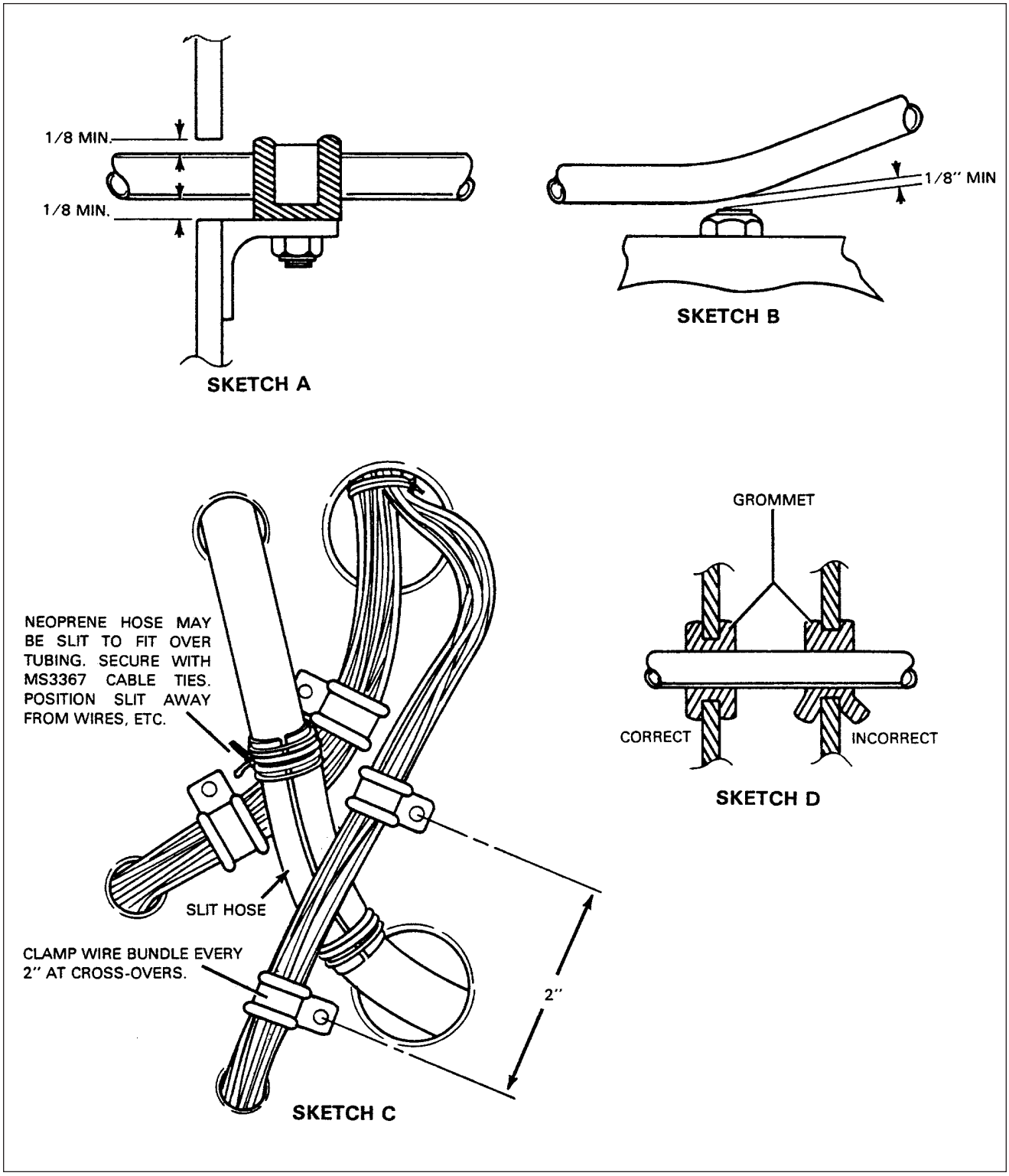

Oxygen Tubing Installations
Figure 3

CREW/PASSENGER OXYGEN SYSTEMS (Cont.)

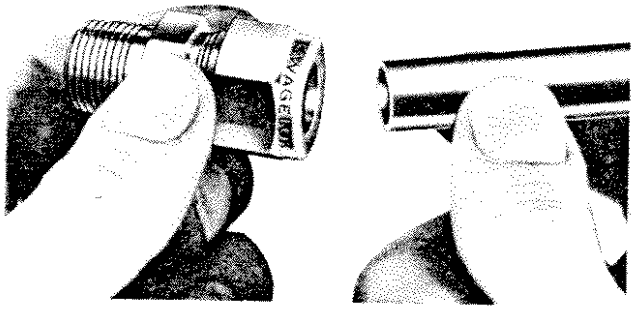

STEP 1

TURN THE FITTING NUT ONTO THE FITTING FINGER TIGHT AND INSERT THE TUBE UNTIL IT BOTTOMS FIRMLY ON THE SHOULDER IN THE FITTING.

STEP 2

MARK THE NUT AT THE SIX O'CLOCK POSITION.

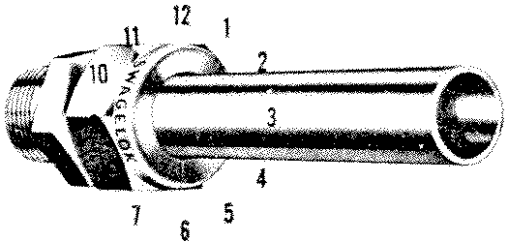

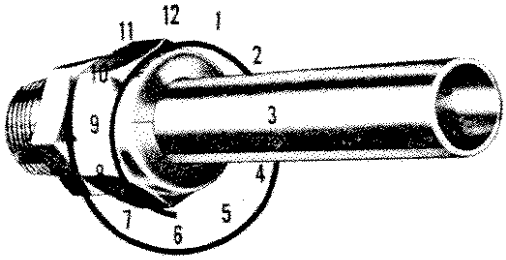

STEP 3

HOLD THE FITTING WITH A WRENCH AND TIGHTEN THE FITTING NUT AS FOLLOWS:

a. TUBING WITH A DIAMETER GREATER THAN 3/16th INCH SHALL BE TIGHTENED 1-¼ TURNS (THE NINE O'CLOCK POSITION).

b. TUBING WITH A DIAMETER OF 1/16, 1/8 OR 3/16 INCH SHALL BE TIGHTENED ONLY 3/4 TURN.

Installation of Swaglock Fittings
Figure 4

CREW/PASSENGER OXYGEN SYSTEMS (Cont.)

CLEANING AND PURGING OF OXYGEN SYSTEM COMPONENTS

– CAUTION –

Care and critical attention must be made to prevent contamination of components by oil, grease, water, or foreign matter. Compressed air used in cleaning and flushing tubes must be clean, dry, filtered (oil free) air only.

Three methods are recommended for cleaning oxygen system components follows:

1. Method I.
   a. Vapor degrease affected part(s) with trichlorethylene.
   b. Blow part(s) dry with a stream of compressed air, or dry nitrogen. Refer to previous caution.
2. Method II.
   a. For tubing, flush with naptha per specification TT-N-95.
   b. Blow clean and dry off all solvent with clean, dry, filtered air. Refer to previous caution.
   c. Flush with isopropyl alcohol.
   d. Rinse thoroughly with fresh water.
   e. Dry with air as described in previous caution or by heating at a temperature of 250° to 300°F for one half hour.

– NOTE –

Solvents can be reused provided they do not become badly contaminated with oil. This condition can be determined by thoroughly evaporating 100 millileters of the liquid in a glass dish of a determined weight. Evaporation may be accomplished by heating dish at 200°F for one half hour. If after evaporation and cool down, residue exceeds 100 milligrams in weight, solvent cannot be used for this purpose.

3. Method III.
   a. Flush with hot inhibited alkaline cleaner until free from oil and grease.
   b. Rinse thoroughly with fresh water.
   c. Dry thoroughly with a stream of clean air as described in previous caution, or by heating 250° to 300°F for one-half hour minimum.
   4. After cleaning, all tubing must be protected by caps, plugs, and/or plastic bags.

– CAUTION –

Do not use adhesive tape on oxygen components for attaching or securing protective coverings. Use waxed lacing twine or tie raps.

5. Before reinstallation make sure fitting, tube, and fixture threads are in good condition and that cones do not exhibit pitting or disfigurement.

CREW/PASSENGER OXYGEN SYSTEMS (Cont.)

SWAGELOC FITTING INSTALLATIONS (Refer to Figure 4.)

– NOTE –

High pressure line fitting at regulator should be tightened until it bottoms. Make sure to use teflon tape on all male pipe threads.

1.For Swageloc fittings not preswaged or for in-aircraft installation, proceed as follows;
   a. Turn fitting nut onto fitting finger tight, and insert tube until it bottoms firmly on shoulder in fitting.
   b. Tighten nut with a wrench until tube will not turn by hand.
   c. Mark nut at six o`clock position.
   d. Hold fitting body steady with a backup wrench and tighten as follows:
      (1) On tubing with a diameter bigger than 3/16 inch, tighten 1 1/4 turns (to nine o'clock position).
      (2) On tubing of 1/16, 1/8, and 3/16 inch diameter tighten only 3/4 turn.
   e. If nut and tube must be disconnected from fitting, reconnect by seating tube on shoulder of fitting and tightening nut finger tight. Follow up by tightening nut with a wrench, one quarter turn (if absolutely necessary original 1 1/4 or 3/4 tight position) and then snug with wrench.
2. Preswaged Swageloc fittings are fabricated and installed as follows:
   a. Assemble nut and ferrules finger tight on preswaging tool and insert tube until it firmly bottoms on shoulder in tool. Preswaging tool can be attained from Crawford Fitting Company, refer to List of Consumable Materials in Chapter 91.
   b. Tighten nut on fitting just enough that tube within fitting will not turn by hand.
   c. With a wrench tighten nut as follows:
      (1) On tubing with diameters over 3/16 inch, tighten 1 1/4 turns.
      (2) On tubing with 1/16, 1/8, or 3/16 inch diameter tighten 3/4 of a turn.
   d. Unscrew nut to release ferrule-tube assembly from tool.
   e. Assembly is installed on fitting as follows:
      (1) Slide tube in fitting until it bottoms, turn nut to finger tight position, and tighten one quarter turn with wrench.
      (2) Snug slightly with wrench.

APPLICATION OF TEFLON TAPE THREAD SEALANT

All male pipe (tapered) threads of oxygen system should be sealed with 3M No. 48 teflon tape. Teflon tape should not be used on straight threads. Do not use any other lubricants in place of teflon or on any other threads.

1. Wrap tape on threads, starting with those farthest from opening, in direction of thread spiral. Circle threads, making sure that each side of tape has a slight overlap.
2. Wrap tape such that it does not extend beyond last thread on fitting at opening. tape should then be pulled till it separates. Do not cut tape, it will not stick properly.

CREW/PASSENGER OXYGEN SYSTEMS (Cont.)

CHART 2.
OXYGEN SYSTEM LIMITS

Parts	Inspection	Overhaul
Regulator	300 Flight Hours	5 yrs.
Pressure Gauge	300 Flight Hours	Replace on Condition
High Pressure Lines	300 Flight Hours	Replace on Condition
Low Pressure Lines	300 Flight Hours	Replace on Condition
Outlets	300 Flight Hours	Every 5 years (1)
External Recharge Valve	Each Use	Every 5 years (2)
Masks	Each Use	Replace as necessary

(1) On condition, replace the rubber components in the assembly or replace assembly.
(2) If the screen in front of valve is dirty, replace valve. Valve replacement is recommended for every 5 years.

LEAK TESTS

Solutions recommended for leak testing are Leak-Tec Formula #16-ox, and that available from Scott Aviation. Refer to List of Consumable Materials for consumer information.

1. Remove royalite covers in baggage compartment and, with oxygen system turned off, disconnect low pressure supply line and connect it to a regulated cylinder charged with dry nitrogen.

– NOTE –

Whenever a leak check is performed, all fitting connections as well as other questionable areas, should be inspected.

2. Apply leak detector solution to test surface and watch for indication of leakage.
3. Large leaks will produce bubbles immediately, but small leaks will form a white foam in 5 to 60 seconds.
4. With outlets vacated of masks, connect a test pressure gauge to co-pilot's outlet as described in subject paragraph on Inspection and Maintenance, see Figure 2.
5. Adjust regulator on dry nitrogen cylinder for 100 psi and check for leakage at outlets.
6. Correct any leaks and wipe off excess leak detector solution.
7. Close valve on nitrogen gas tank and insert a Scott plug-in to relieve system pressure.
8. Disconnect test gauge, plug-in, and nitrogen tank.
9. If oxygen cylinder is not to be hooked up or installed immediately, cap and cover exposed fittings with new clean plastic bags. Temporarily support lines as needed to prevent damage. Make sure caps and coverings are as clean as possible.

CREW/PASSENGER OXYGEN SYSTEMS (Cont.)

OXYGEN SYSTEM COMPONENT HANDLING

Keeping in mind effect of compressed oxygen on materials, oxygen system components must be handled carefully. Ports on regulators, indicators, and other opened components must also be kept capped or plugged to prevent ingestion of foreign material. Adjustments or modifications should only be initiated under approval of FAA, Piper, or Scott Aviation.

OXYGEN CYLINDER

– NOTE –

Replacement time for recharge valve is every 5 years. If cylinder is being removed for 5 year test, it is recommended valve be removed and/or replaced at same time.

Oxygen bottle, located behind finished bulkhead in baggage compartment, is secured to a removable shelf mounted to each side of fuselage. Tank is mounted such that regulator-control valve is on left side of aircraft, same side as recharge valve. A shroud also covers regulator end of bottle to prevent leaks, should any develop, from filling aircraft with oxygen. With this in mind, a vent tube interconnects shroud with recharge valve fixture permitting any oxygen to vent overboard.

REMOVAL OF OXYGEN CYLINDER (Refer to Figure 1.)

1. Remove screws attaching finished bulkhead to fuselage bulkhead, and remove finished bulkhead.
2. It is recommended that when working in rear of aircraft, appropriate tailstand be properly attached to tail.
3. With immediate area clear of flammables (grease, hydraulic fluid, fuel), and oxygen system off, connect a mask or tube to an outlet to exhaust any pressure in system.
4. Remove screws and loosen clamps securing shroud to cylinder and regulator-control valve.
5. Remove spring clamp securing vent tube to cylinder shroud and disconnect tube.
6. Carefully separate shroud along high pressure lines.
7. High pressure fitting on regulator-control valve incorporates a valve that opens only when a line is connected with it. With this in mind, carefully unscrew high pressure line until pressure decreases, and then remove line. Disconnect low pressure lines as well.
8. Loosen and open clamps securing bottle to shelf. Carefully move bottle in such a way that fair access can be made to control mechanism.
9. Disconnect control cable. Be careful not to kink cable.
10. Remove tank from aircraft being careful not to damage regulator-control valve.

CREW/PASSENGER OXYGEN SYSTEMS (Cont.)

REMOVAL OF RECHARGE VALVE

Recharge valve is located on left rear side of aircraft and is covered by its own access door. Valve is interconnected with gauge line as well as regulator-control valve and is constantly under cylinder pressure as long as high pressure line is attached to regulator.

– NOTE –

Recommended service life for recharge valve is 5 years, and oxygen cylinder must be hydrostatically tested every 5 years. With these circumstances in mind it is recommended that recharge valve be removed and replaced when cylinder is removed for service.

1. Due to location of recharge valve it is necessary to remove oxygen cylinder. For ease of removal it is recommended that cylinder shelf also be removed.
2. Remove screws that secure recharge valve's protective shroud to valve mounting dish, and slide shroud back over high pressure line.
3. Unscrew high pressure line fitting from recharge valve and with somebody turning screw from outside aircraft, backup nut to remove valve.

INSTALLATION OF RECHARGE VALVE

1. Insert valve through aperture in mounting cup and align bolt holes.
2. With safety chain and information plate mounting washer aligned at one of holes, install mounting bolts.
3. Apply teflon tape to male threads as explained earlier in this section.
4. Reconnect high pressure line to valve and torque fitting 30 to 50 inch pounds.
5. Reinstall valve protective shroud.

INSTALLATION OF OXYGEN CYLINDER

1. Before mounting cylinder to shelf, connect control cable to control valve-regulator. If shelf has been removed reinstall it before continuing. Install teflon taper per prior instructions in this chapter.
2. Position cylinder on shelf and install pressure lines. Insert tubing into fitting until ferrule seats in fitting. Tighten nut by hand and then one quarter turn with a wrench. If fitting is relatively new nut might be turned 3/4 of a turn. Follow up by snugging nut slightly with a wrench.
3. Install cylinder protective shroud and tighten clamps securing it to tank and valve.
4. Secure cylinder to shelf by connecting and tightening clamps.
5. If vent tube has been disconnected from shroud make sure it is firmly attached to both cylinder and valve shrouds.
6. Make sure all seals are properly in place in cylinder shroud. Make sure MS35489-35 seal is in bottom of shroud where low pressure line comes through. Two seals where high pressure lines go into shroud are MS35489-2 grommet seals.
7. Check pressure and refill bottle as necessary.
8. Inspect for leaks, especially at fittings that have been separated.

CREW/PASSENGER OXYGEN SYSTEMS (Cont.)

PRESSURE GAUGE

Pressure gauge is tied into same high pressure line as recharge valve, through a tee fitting at tank regulator control valve. High pressure line connects into valve such that it activates a check valve permitting pressure to line.

– CAUTION –

Disconnect high pressure fitting at tank valve being careful to only unscrew fitting a little at a time so as to allow pressure to bleed off, cap line as soon as possible after removal.

REMOVAL AND INSTALLATION OF PRESSURE GAUGE

1. Remove overhead vent panel and remove instrument from bracket as follows;
   a. Disconnect tube from fitting at rear of instrument.
   b. Immediately cap oxygen line.
   c. Snap off clip securing instrument in its bracket.
   d. If fitting on rear of instrument is to be reused remove, clean threads, and using teflon tape, install fitting on new gauge. Refer to appropriate section in this chapter.
2. Install gauge as follows;
   a. With fitting installed on rear of instrument install gauge in bracket. Make sure clip is properly secure.
   b. Remove cap from oxygen line and with teflon tape properly installed, connect oxygen line to fitting.
   c. Reinstall fitting in tank.

OUTLETS

REMOVAL OF OUTLETS

1. Make sure oxygen system is completely turned off. Insert an oxygen mask to release pressure, and insure the system is off.
2. With a suitable spanner wrench, remove outer half of outlet.
3. Remove screws retaining trim panel and remove same.
4. Outlet can now be disconnected from low pressure line(s). Make sure to cap lines immediately after disconnection.

INSTALLATION OF OUTLETS

1. Apply teflon tape to male threads of affected fitting. Refer to appropriate procedure in this chapter.
2. Connect outlet to low pressure line.
3. Position trim panel and secure with screws.
4. Position and secure outer half of outlet with a suitable spanner wrench.
5. Torque fittings onto outlets to approximately 30 in lbs. Do not overtorque.

CREW/PASSENGER OXYGEN SYSTEMS (Cont.)

OXYGEN ON/OFF CONTROL

REMOVAL AND INSTALLATION OF OXYGEN ON/OFF CONTROL (Refer to Figure 35-1.)

1. As shown in Figure 1, on/off control is mounted in overhead vent panel. To remove control, drop overhead panel and ducting and remove retaining nut from rear of control cable fitting.
2. Make access to bottle; if necessary, and disconnect cable from regulator-control mechanism.
3. Cut tie-raps securing cable and pull cable from aircraft.
4. When installing a new cable, make sure new cable shield is cut to 113.5 inches long and that core has sufficient material to make a twin loop, two inches from end of shield. Install as follows:
   a. Route cable through hole in overhead duct and as shown in Figure 1. Tie-rap cable as before.
   b. Make sure cable properly reaches valve and reinstall vent and panels. Reconnect cable to control mechanism.

REFILLING OXYGEN SYSTEM

– CAUTION –

Before servicing oxygen system make sure aircraft is securely grounded electrically.
Do not attempt to tighten any connections while system is charged.
Do not operate one electrical equipment while servicing oxygen system.

Refilling of oxygen systems should be done by qualified personnel. For comparison of filling pressures to ambient temperatures refer to Chart 3. The following are perimeters to be followed for filling.

1. Only aviators breathing oxygen (MIL-O-27210) and appropriate filling equipment should be used to fill system.

CHART 3
FILLING PRESSURES FOR CERTAIN AMBIENT TEMPERATURES

Ambient Temperature	Filling Pressure	Ambient Temperature	Filling Pressure
0	1650 (PSI)	70	1975 (PSI)
10	1700	80	2000
20	1725	90	2050
30	1775	100	2100
40	1825	110	2150
50	1875	120	2200
60	1925	130	2250

NOTE: Filling pressures are for 1850 PSI at 70F. Table assumes 25F rise due to heat of compressor with max. fill rate.

CREW/PASSENGER OXYGEN SYSTEMS (Cont.)

REFILLING OXYGEN SYSTEM (Cont.)

2. If a cylinder has less than 5 psi pressure or has insufficient pressure to produce an audible hissing sound when valve is cracked, it should be removed and/or purged, and if condition has existed for a significant length of time, hydrostatically tested.
3. Make sure both charge valve and recharge cart fittings are clean and free of contamination.

– WARNING –

BE CERTAIN THERE IS NO OIL ON FITTINGS OR NEAR IMMEDIATE VICINITY.

4. Attach service cart hose to recharge port. Fill system at a rate not exceeding 200 psig per minute proceeding as follows:
   a. To obtain correct filling pressure for oxygen system at various ambient temperatures, a table is included for your convenience. Pressures given are not exact, but sufficiently accurate for practical purposes of working pressures between 1800 and 2400 psig cylinders. Cylinder should be allowed to cool to a stabilized temperature after filling before checking against values in Chart 3.
   b. When using a recharge unit consisting of one supply cylinder, slowly open valve of supply unit and allow oxygen to transfer.
   c. When using a recharge unit consisting of two or more supply cylinders (cascade storage system), it is recommended that following procedure be used:
      (1) Before opening any valves, check pressure remaining in airplane's oxygen cylinder. If it is still partly charged, note pressure indicated on cylinder gauge. Then open and close each valve on cascade storage system and determine which cylinder has lowest pressure. When found if this cylinder has a pressure lower than oxygen cylinder in aircraft, do not attempt using it for filling; use storage cylinder that has a pressure higher than the aircraft's cylinder but lower than others.
      (2) Open valve on only one storage cylinder with lowest pressure. When pressure indicated on aircraft's oxygen gauge and charging gauge has become equal, close valve of storage cylinder; then go to storage cylinder with next higher pressure and repeat procedure.
      (3) If after using last storage cylinder aircraft's oxygen system is still not fully charged, a full storage cylinder should be put in place of a cylinder with lowest pressure and used in same manner.
      (4) A good deal of oxygen will remain in large cylinders used in cascade system after filling only one of cylinders but such remaining oxygen will be at a pressure something less than 1850 psi which is not sufficient pressure to completely refill another aircraft cylinder, although it will refill several smaller cylinders.
      (5) It is not economical even on a three or four cylinder cascade system to begin recharging with oxygen at less than 300 psi pressure in 300 cubic foot bank of cylinders. So use 300 cubic foot cylinders down to approximately 300 psi; then return for refilling. In two cylinder systems use to approximately 100 psi; then return for filling.
   d. When pressure gauge on recharge unit or in aircraft reaches 1800 to 1850 psi, close pressure regulator valve on recharge unit. Disconnect filler hose from filler valve; replace protective cap on filler valve and close access cover. Check cylinder pressure according to Table IIVa after cylinder temperature stabilizes.
5. After detaching service cart, cap hose and fittings to prevent contamination.
6. Perform a leak check of high pressure lines and clean off solution afterwards. If solution is not properly cleaned off, unusual corrosion may result.

CREW/PASSENGER OXYGEN SYSTEMS (Cont.)

PORTABLE - OXYGEN SYSTEM

REMOVAL OF OXYGEN UNIT (Refer to Figure 1.)

An oxygen unit can be released from its cradle by pulling down on ring under cradle, sliding unit forward, and lifting it out of cradle.

INSPECTION AND OVERHAUL TIME

Due to nature of process used to test compressed gas tanks, it is recommended that overhaul, service or hydrostatic tests be conducted by an FAA or manufacturer (Scott Aviation) approved shop. Following checks and charts give recommended inspection and overhaul times for various parts of oxygen system.

– NOTE –

Oxygen cylinders are identified by ICC or DOT identification stamped on cylinder. Standard weight cylinder (ICC or DOT 3AA1800) must be hydrostatic tested at end of each 5 year period. Light weight cylinders (ICC or DOT 3HT1850) must be tested every 3 years and after 4380 refills, or 15 years whichever comes first, be replaced. Month and year of last test stamped on cylinder beneath ICC DOT identification.

1. Inspect outlets, and using directions described in next paragraph, check leaks both in non-use and use condition.
2. Check pressure gauge for accuracy by removing back section of unit and connecting a gauge known accuracy, to fill port.
3. Inspect tank for dents, bulges, major strap chafing marks or corrosion. Should any of these conditions exist, tank should be hydrostatically tested.

CHART 4
OXYGEN SYSTEM COMPONENT LIMITS

Parts	Inspection	Overhaul
Regulator	300 Flight Hrs.	5 yrs.
Pressure Gauge	300 Flight Hrs.	5 yrs.
Outlets	30 Flight Hrs.	5 yrs.
Recharge Valve	Each Use	Replace every 5 years
Masks	Each Use	Replace as necessary

CREW/PASSENGER OXYGEN SYSTEMS (Cont.)

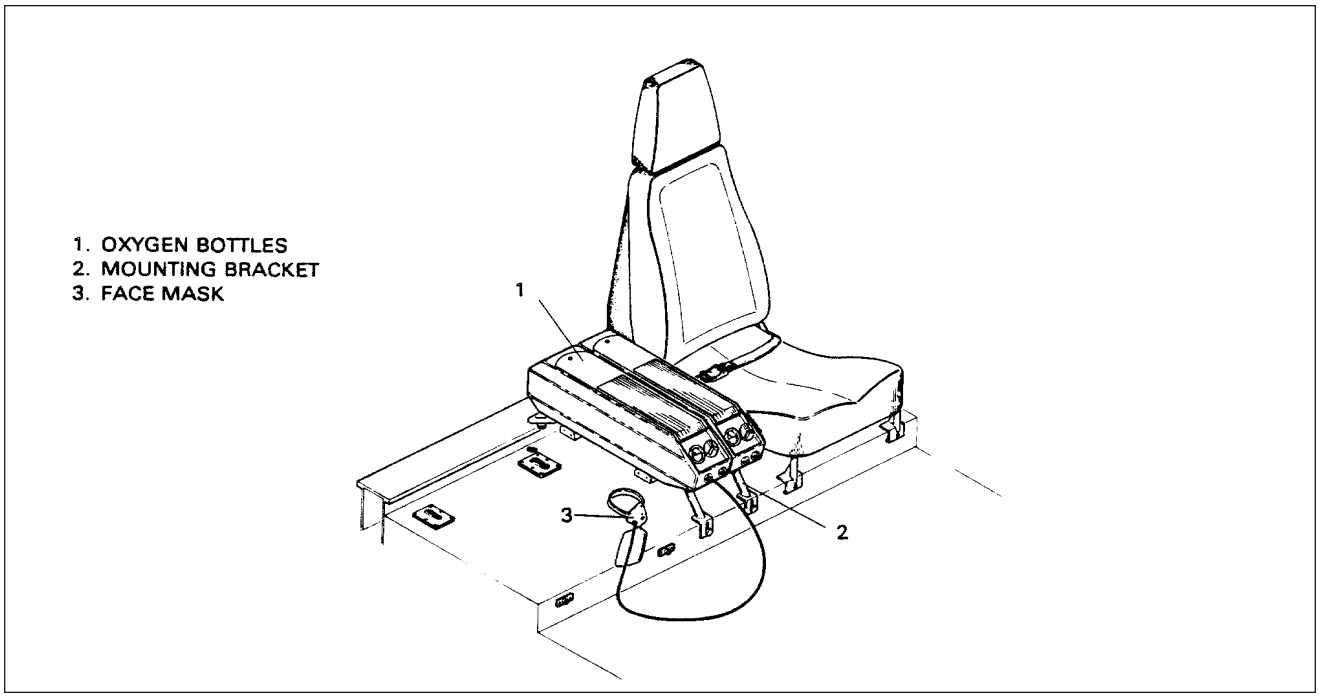

Oxygen Installation (Portable)
Figure 5

TESTING FOR LEAKS

Apply detector fluid type CD-1 solution or its equivalent. Solution should be shaken to obtain suds or foam. Suds or foam should be applied sparingly to joints of a closed system. Look for traces of bubbles. No visible leakage should be found. Repair or replace any defective parts and retest system.

With system pressurized to service pressure, further tests can be made. Rate of any leak should not exceed one percent of total supply per 24 hour period. All traces of detector fluid should be wiped off at conclusion of examination.

MAINTENANCE

1. Check cylinder to be sure it is securely mounted.
2. Check cylinder for ICC identification number and for date of last FAA inspection and test.
3. If cylinder is completely empty it must be completely disassembled and inspected in an FAA or manufacturer approved facility before recharging.
4. Refer to FAA Manual AC 43.13-1A for more details.

CREW/PASSENGER OXYGEN SYSTEMS (Cont.)

OUTLETS

REMOVAL OF OUTLETS

1. Make sure control valve is in full off position.
2. Connect a mask or connector to valve to release any pressure.
3. Using a suitable spanner wrench, remove outlet.
4. Outlet can now be removed from low pressure line.

INSTALLATION OF OUTLETS

1. Apply sealant (Permacel 412) to male end of fitting.
2. Install outlet to regulator extension with a suitable spanner wrench.
3. Torque fittings into outlets approximately 30 inch-pounds. Do not over torque as this could damage outlet.

PURGING OXYGEN SYSTEM

System should be purged whenever cylinder pressure falls below 50 PSI or if any lines are left open for any length of time. Also, if bottle is left at below 200 PSI it may develop odors from bacterial growth. This will make it necessary to purge system. Use following procedures:

– CAUTION –

When performing this operation make sure area is a No Smoking Area, and is as clean as possible of oil and dirt.

1. Keep all doors and windows open.
2. Connect oxygen recharging unit to filler valve.
3. Plug oxygen masks in to outlet valves and turn on system.
4. Set recharging unit pressure regulator to deliver 50 psi and let system purge for one hour. If any odor is still present repeat the procedure for one or more hours. If the odor persists after the second purging, send unit to its manufacturer, or an approved shop.

CLEANING OF FACE MASKS

Disposable marks are designed for one-time use and require no maintenance. Pilot's and copilot's masks can be cleaned as follows:

1. Remove microphone from mask.
2. Remove sponge rubber discs from mask turrents. Do not use soap to clean sponge rubber discs, as this would deteriorate rubber and give off unpleasant odors. Clean in clean water and squeeze dry.
3. Wash rest of mask with a very mild solution of soap and water.
4. Rinse mask thoroughly to remove all traces of soap.
5. Make sure sides of breathing bag do not stick together while drying, as this may decrease life of rubber in bag. Mask can be sterilized with a solution of 70 percent ethyl alcohol.

– END –

INTENTIONALLY LEFT BLANK

CHAPTER

37

VACUUM

CHAPTER 37 - VACUUM

TABLE OF CONTENTS/EFFECTIVITY

CHAPTER SECTION	SUBJECT	GRID NO.	EFFECTIVITY
37-00-00	GENERAL	3G8	July 1, 1993
37-00-00	Description and Operation	3G8	July 1, 1993
37-00-00	Troubleshooting	3G8	July 1, 1993
37-10-00	DISTRIBUTION	3G12	July 1, 1993
37-10-00	Vacuum System Service Tips	3G12	July 1, 1993
37-10-00	Vacuum Pump	3G13	July 1, 1993
37-10-00	Removal of Vacuum Pump	3G14	July 1, 1993
37-10-00	Replacing Pump Fittings	3G14	July 1, 1993
37-10-00	Installation of Vacuum Pump	3G14	July 1, 1993
37-10-00	Vacuum Regulator Valve	3G15	July 1, 1993
37-10-00	Adjustment of Vacuum Regulator Valve	3G15	July 1, 1993
37-10-00	Removal and Replacement of Regulator Valve	3G15	July 1, 1993
37-20-00	INDICATING	3G16	July 1, 1993
37-20-00	Vacuum Gauge	3G16	July 1, 1993
37-20-00	Vacuum Sensor	3G16	July 1, 1993
37-20-00	Removal of Vacuum Sensor	3G16	July 1, 1993
37-20-00	Installation of Vacuum Sensor	3G16	July 1, 1993

GENERAL

– CAUTION –

When servicing or inspecting vendor equipment installed on Piper Aircraft, it is the user's responsibility to refer to the applicable vendor publication.

Instrumentation in this airplane provides quick and actual indications of the altitude, performance, and condition of the aircraft. Maintenance, other than described, must be performed by the instrument manufacturer or an authorized instrument repair station.

DESCRIPTION AND OPERATION

The vacuum system operates the gyro instruments and consists of an engine driven dry vacuum pump, a vacuum regulator and filter, and necessary plumbing to connect the components. To provide a backup source to operate gyro flight instruments, should the engine driven pump fail, PA-32-301 SP models, serial numbers 32R-8613001 through 32R-8613005, and 3213001 through 3213041; PA-32-301T SP models, serial numbers 32R-8529018 through 32R-86290006, and 3229001 through 3229003; PA-32-301 II HP models, serial numbers 3213042 and up, will have an auxiliary dry air pump system in the existing system, A vacuum gauge is used to monitor the system constantly.

TROUBLESHOOTING

CHART 1
TROUBLESHOOTING VACUUM SYSTEM (Sheet 1 of 3)

Trouble	Cause	Remedy
No vacuum gauge indication.	Open vacuum line.	Locate and repair.
	Faulty instrument.	Replace.
No vacuum gauge indication at instrument or source.	Faulty gauge and/or malfunctioning pump.	Replace gauge, and/or pump(s)
Low vacuum system indications.	Filter dirty.	Clean or replace filter.
	Vacuum regulator valve needs adjusting.	Adjust regulator valve as per adjustment instructions in this section.
	Restrictions in gyros to filter line.	Repair or replace line.
	Pump(s) to gyros line leaking.	Check all lines and fittings.
Abnormal gyro precession - vacuum gauge reading correct or at maximum pressure.	Dirty filter.	Replace filter and adjust regulator.

TROUBLESHOOTING (Cont.)

CHART 1
TROUBLESHOOTING VACUUM SYSTEM (Sheet 2 of 3)

Trouble	Cause	Remedy
Normal vacuum indication but sluggish operation of instruments.	Faulty instrument.	Replace instrument.
	Dirty or clogged filter	Replace filter.
	Vacuum line kinked.	Repair lines.
High System vacuum.	Vacuum regulator is improperly adjusted.	Adjust regulator properly.
	Dirty or clogged filter.	Replace filter.
	Vacuum lines bent, kinked, or restricted.lines.	Repair or replace
	Vacuum regulator sticking or dirty screen	Clean screen and check regulator operation.
Regulator cannot be adjusted to maintain correct pressure.	Lines leaking.	Check all lines and fittings.
	Vacuum pump malfunctioning.	Replace pump.
Vacuum correct on ground, but will not maintain pressure at altitude.	Vacuum pump malfunctioning.	Replace pump.
	Regulator sticky.	Clean regulator.
Vacuum correct but pilot reports pressure erratic or shows complete loss in flight.	Regulator sticky.	Clean regulator.
	Oil in pump due to leaky engine seal or cleaning fluid blown into pump while cleaning engine.	Replace pump.
Pressure can only be maintained at full throttle on ground.	Leak in system.	Repair or replace lines.
	Worn pump.	Replace pump.
	Stuck regulator.	Clean or replace regulator.

TROUBLESHOOTING (Cont.)

CHART 1
TROUBLESHOOTING VACUUM SYSTEM (Sheet 2 of 3)

Trouble	Cause	Remedy
AUX ON selected on ground check and auxiliary vacuum pump will not run.	Circuit breaker open.	Push circuit breaker(s) in.
	Faulty electrical motor.	Isolate and check operation. Replace pump or motor assembly if required.
	Faulty contactor.	Check operation. Replace if required.
	Loose or broken wire	Tighten all wire connections connections.and terminals. Check all wires for open breaks and repair as needed.
AUX ON selected on ground check and/or no vacuum is indicated.	Leak in vacuum system.	Tighten clamps and check hoses. Replace if necessary.
AUX ON annunciator will not light.	Restriction in hose lines.	Inspect, repair, or replace hose line if necessary.
	Dirty filter.	Replace filter.
	Regulator not adjusted properly.	Adjust properly.
VAC OFF AUX ON annunciator switching will not engage auxiliary vacuum pump system.	Open circuit breaker.	Push circuit breaker(s)
	Faulty switch.	Test switch for operaiton. Replace if necessary.
Auxiliary vacuum pump maintains correct pressure on ground but not at altitude.	Auxiliary vacuum pump is worn.	Replace auxiliary vacuum pump assembly.
	Regulator is sticky.	Clean or replace regulator.

INTENTIONALLY LEFT BLANK

DISTRIBUTION

VACUUM SYSTEM SERVICE TIPS

The following information is intended to acquaint field service personnel with a means to diagnose vacuum system service symptoms on those components which are serviced by removal and replacement. These items include hoses, clamps, gyro filters, vacuum regulating valves and vacuum gauges.

1. Hoses and Clamps:
   a. These items should be examined periodically and inspected carefully whenever engine maintenance activities cause hose disconnections to be made at the pump, regulating valve, gyros and/or vacuum gauge.
   b. Ends of hoses should be examined for rubber separation and slivers of rubber on inside diameter of hoses. These slivers can and do become detached. If this happens, vacuum pump sucks these loose particles and eventually ingests them. This can cause premature pump service.
   c. Hose clamps and fittings should be replaced when broken, damaged or corroded.

– CAUTION –

When replacing any of the threaded fittings, DO NOT USE PIPE DOPE or any other anti-seize tape or compound. AIRBORNE fittings are all cadmium plated to avoid the need for any other anti-seize materials. The reason for this caution is to protect pump from ingesting any foreign materials that could cause premature service.

2. Vacuum Gauges:
   a. Vacuum gauges seldom require service and usually are replaced when malfunctions occur.

– NOTE –

Vacuum gauge failure in a properly operating vacuum system does not impair safety of flight.

   b. If vacuum gauge malfunctions in a manner to cause an incorrect reading in normal cruise conditions, gauge must be checked by comparing reading with a gauge of known accuracy. If gauge is indicating correct values and system vacuum level is not in accordance with specified vacuum, then and only then should regulator be reset.
   c. Visual examination of gauge performance should cover the following steps:
      (1) With engine stopped and no vacuum supplied to gauge, its pointer should rest against the the internal stop in 9 o'clock position. Any other displacement from this position suggests need for replacement.
      (2) A slight overshoot during engine startup, not to exceed half an inch () of mercury, is normal and is not cause to replace gauge.
      (3) With engine operating at normal cruise RPM, gauge should read from 4.8 inches to 5.2 inches of mercury (vacuum).
      (4) At 1200 rpm, vacuum gauge reading should be more than four inches of mercury.

DISTRIBUTION (Cont.)

VACUUM SYSTEM SERVICE TIPS (Cont.)

3. Gyro Filters:
   a. Gyro filters must be serviced on a scheduled basis, not to exceed 100 hours, or sooner as condition indicates.
   b. The system installation employs a large central filter and differential vacuum gauge that continuously monitors filter condition while indicating vacuum readings.

– NOTE –

The system employs a central filter in combination with a differential vacuum gauge and will indicate a decline in panel gauge reading when filter becomes clogged. Filters should be replaced when gauge reading declines; DO NOT adjust regulator.

4. Vacuum Regulator:
   a. Vacuum regulating valve seldom needs replacement. Symptoms that suggest replacement are:
      (1) Chatter as indicated by rapid fluctuation of vacuum gauge needle or an audible sound.
      (2) Non-repeatability of vacuum gauge reading when panel gauge is not suspect or has been checked against a known test gauge (cruise RPM only).
   b. All modes of regulator malfunction tend to increase vacuum power applied to gyros. Thus, although excess vacuum is applied, a loss of vacuum does not occur.
   c. Gyros themselves act as a limiting device to keep vacuum power applied from exceeding safe levels.

– NOTE –

If panel gauge has been checked and found OK and vacuum gauge reading does not repeat within range of 4.8 to 5.2 inches of mercury, then regulating valve should be changed. Observe usual precautions for maintaining system cleanliness to avoid premature pump service.

VACUUM PUMP

Vacuum pump is of rotary vane, positive displacement type. This unit consists essentially of an aluminum housing, a carbon rotor and carbon vanes. This assembly is driven by means of a coupling mated to engine driven gear assembly. Pump is mounted on accessory section of engine.

DISTRIBUTION (Cont.)

VACUUM PUMP (Cont.)

REMOVAL OF VACUUM PUMP

1. Remove top portion of engine cowling. (Refer to Chapter 71.)
2. Loosen hose clamp and remove hose from pump fitting.
3. Remove four retaining nuts, lock washers and plain washers used to secure pump to engine; then remove pump.

REPLACING PUMP FITTINGS

1. Before installing any fittings on pump, check for any external damage. A pump that has been damaged or dropped should not be installed.
2. When a vise is used to hold pump while installing fittings, suitable caution must be exercised to avoid pump damage. Square mounting flange must be held between soft wood blocks and only at right angles to vise jaws. Use only enough vise pressure to hold pump firmly.

– CAUTION –

DO NOT apply vise pressure to outside diameter or overall length of pump.

3. The ports of AIRBORNE pump have been treated with a dry film lubricant and AIRBORNE fittings are cadmium plated thus eliminating any need for thread lubricants. If thread lubricant is required, use a powdered moly-sulfide or graphite in dry form or in an evaporating vehicle; or employ a silicone spray. Apply sparingly to external threads of fittings only.

– CAUTION –

DO NOT use pipe tape, thread dope, hydrocarbon oil or grease, as these can contaminate pump and cause malfunction.

INSTALLATION OF VACUUM PUMP

1. Place pump gasket in its proper place and align spline on pump drive with spline on engine drive assembly.

– CAUTION –

Only pump mounting gasket authorized and approved for use on Airborne vacuum pump is Airborne gasket B3-1-2, Piper part number 751 859. Use of any other gasket may result in oil seepage or leakage at mounting surface.

2. Secure pump to engine with four plain washers, lock washers and retaining nuts. Torque nuts 50 to 70 inch-pounds.
3. Connect hoses to pump and secure with hose clamps.
4. Reinstall engine cowling.

DISTRIBUTION (Cont.)

VACUUM REGULATOR VALVE

One vacuum regulator valve is incorporated in system to control vacuum pressure to gyro instruments. Regulator valve is located under instrument panel. Access to valve for maintenance and adjustment is gained from below instrument panel.

ADJUSTMENT OF VACUUM REGULATOR VALVE

1. Loosen locking nut or remove protective cap from valve, depending on which type is installed.

– NOTE –

Do not attempt adjustment of this valve with engine in operation, without qualified pilot or other responsible person at controls.

2. Start engine, after allowing time for warm-up, run engine at 2000 rpm
3. With engine running at 2000 rpm suction gauge should indicate 5.0 inches of mercury ± 0.2 inches of mercury. If vacuum reading fails to fall within this range, shut down engine and adjust regulator valve by moving valve adjustment screw clockwise to increase pressure, and counterclockwise to decrease pressure. Start engine and repeat check. With engine running at 2000 rpm suction gauge should indicate 5.0 inches of mercury ± 0.2 inches of mercury.
4. Restart engine and repeat check.
5. After system pressure has been adjusted to these recommended settings, replace protective cap or retighten locknut, whichever applies to type of valve installed.

REMOVAL AND REPLACEMENT OF REGULATOR VALVE

1. To remove regulator valve, disconnect the three lines and remove mounting nut. Remove valve from airplane.
2. Replace regulator in reverse order given for removal. Check complete vacuum system for proper operation.

– END –

INDICATING

VACUUM GAUGE

Suction gauge is mounted in right side of instrument panel. This gauge is calibrated in inches of mercury and indicates amount of vacuum created by engine driven vacuum pump. Suction gauge has a direct pressure line and vent line. Therefore, these aircraft indicate differential pressure or actual pressure being applied to gyro instruments. As system filter becomes clogged or lines obstructed, gauge will show a decrease in pressure. Do not reset regulator until filter and lines have been checked.

VACUUM SENSOR

Access to vacuum sensor unit is gained by reaching up under instrument panel to vacuum regulator.

REMOVAL OF VACUUM SENSOR

1. Disconnect the two electrical leads.
2. Unscrew sensor unit from vacuum regulator.
3. Cover hole to prevent foreign matter from entering regulator.

INSTALLATION OF VACUUM SENSOR

1. Screw sensor unit into vacuum regulator.
2. Reconnect the two electrical leads.
3. Perform operational check.

– END –

INTENTIONALLY LEFT BLANK

CHAPTER

39

ELECTRIC/ ELECTRONIC PANELS & MULTIPURPOSE PARTS

CHAPTER 39 - ELECTRICAL/ELECTRONIC PANELS AND MULTIPURPOSE PARTS

TABLE OF CONTENTS/EFFECTIVITY

CHAPTER SECTION	SUBJECT	GRID NO.	EFFECTIVITY
	– NOTE –		
	Refer to Chapter 91 for all wiring diagrams (schematics)		
39-40-00	MULTIPURPOSE ELECTRICAL PARTS	3G20	July 1, 1993
39-40-00	Electrical Switches and Circuit Breakers	3G20	July 1, 1993
39-40-00	Removal of Electrical Switches (PA32R-301/301T SP)	3G20	July 1, 1993
39-40-00	Removal of Electrical Switches (PA32R-301 II HP)	3G20	July 1, 1993

MULTIPURPOSE ELECTRICAL PARTS

ELECTRICAL SWITCHES AND CIRCUIT BREAKERS

Switches are of the rocker type. Switches are mounted in middle of instrument panel. circuit breakers are single hole mounting, pushbutton type with manual reset; they must be reset by the pilot whenever tripped. They are on a circuit breaker panel on lower right hand corner of instrument panel.

REMOVAL OF ELECTRICAL SWITCHES (PA-32R-301/301T SP)

1. For a particular switch removal, remove screw above and screw below switch on front of instrument panel.
2. From behind instrument panel remove switch, and disconnect electrical connections.

– NOTE –

Make note of the placement of the electrical leads to facilitate installation.

REMOVAL OF ELECTRICAL SWITCHES (PA-32R-301 II HP)

– NOTE –

The PA-32R-301 II HP uses lighted rocker switches which snap in from the front of the instrument panel. No screws are required.

1. Gain access to switch to be replaced from behind instrument panel.
2. Squeeze retainer blades on top and bottom of switch together and push switch aft from panel.

– NOTE –

Make note of the placement of the electrical leads to facilitate installation.

3. Disconnect wires from switch. Remove switch.

– END –

INTENTIONALLY LEFT BLANK

CHAPTER

51

STRUCTURES

CHAPTER 51 - STRUCTURES

TABLE OF CONTENTS/EFFECTIVITY

CHAPTER SECTION	SUBJECT	GRID NO.	EFFECTIVITY
51-00-00	GENERAL	3G24	July 1, 1993
51-00-00	Description	3G24	July 1, 1993
51-00-00	STRUCTURAL REPAIRS	3G24	July 1, 1993
51-00-00	Fiberglass Repairs	3G24	July 1, 1993
51-00-00	Fiberglass Touch-Up and Surface Repairs	3H3	July 1, 1993
51-00-00	Fiberglass Fracture and Patch Repairs	3H3	July 1, 1993
51-00-00	Thermoplastic Repairs	3H5	July 1, 1993
51-00-00	Safety Walk Repair	3H12	July 1, 1993
51-00-00	Surface Preparation	3H12	July 1, 1993
51-00-00	Product Listing for Liquid Safety Walk Compound	3H12	July 1, 1993
51-00-00	Application of Liquid Safety Walk Compound	3H12	July 1, 1993
51-00-00	Surface Preparation for Pressure Sensitive Safety Walk	3H13	July 1, 1993
51-00-00	Application of Pressure Sensitive Safety Walk	3H13	July 1, 1993

GENERAL

DESCRIPTION

The PA-32R-301/301T are all metal semi-monocoque structures. Fuselages are constructed of bulkheads, stringers and stiffeners, to which all of the outer skin is riveted. Cabin entrance door is located on right side of fuselage above wing. An emergency exit is provided on left side of fuselage, and consists of pilot's side window and surrounding window frame. Wings and empennage are all metal, full cantilever semi-monocoque type construction with removable tips.

STRUCTURAL REPAIRS

Structural repair methods used must be made in accordance with regulations set forth in FAA Advisory Circular 43-13-1A. To assist in making repairs and/or replacements, Figure 1 identifies type and thickness of various skin material used.

– WARNING –

No access holes are permitted in any control surfaces. Use of patch plates for repairs of all movable tail surfaces is prohibited. Use of any filler material normally used for repair of minor dents and/or materials used for filling inside of surfaces is also prohibited on all movable tail surfaces.

Never make a skin replacement or patch plate from material other than type of original skin, or of a different thickness than original skin. Repair must be as strong as original skin. However, flexibility must be retained so surrounding areas will not receive extra stress.

FIBERGLASS REPAIRS

Repair procedure in this manual will describe methods for repair of Fiberglass Reinforced Structures, Fiberglass Touch-Up and Surface Repairs such as blisters, open seams, delamination, cavities, small holes and minor damages that have not harmed fiberglass cloth material, Fiberglass Fracture and Patch Repairs as puncture, breaks and holes that have penetrated through structure and damaged fiberglass cloth. A repair kit, part number 756 729 will furnish necessary material for such repairs, and is available through Piper Aircraft Dealers.

– NOTE –

Very carefully follow resin and catalyst mixing instructions furnished with repair kit.

STRUCTURAL REPAIRS (Cont.)

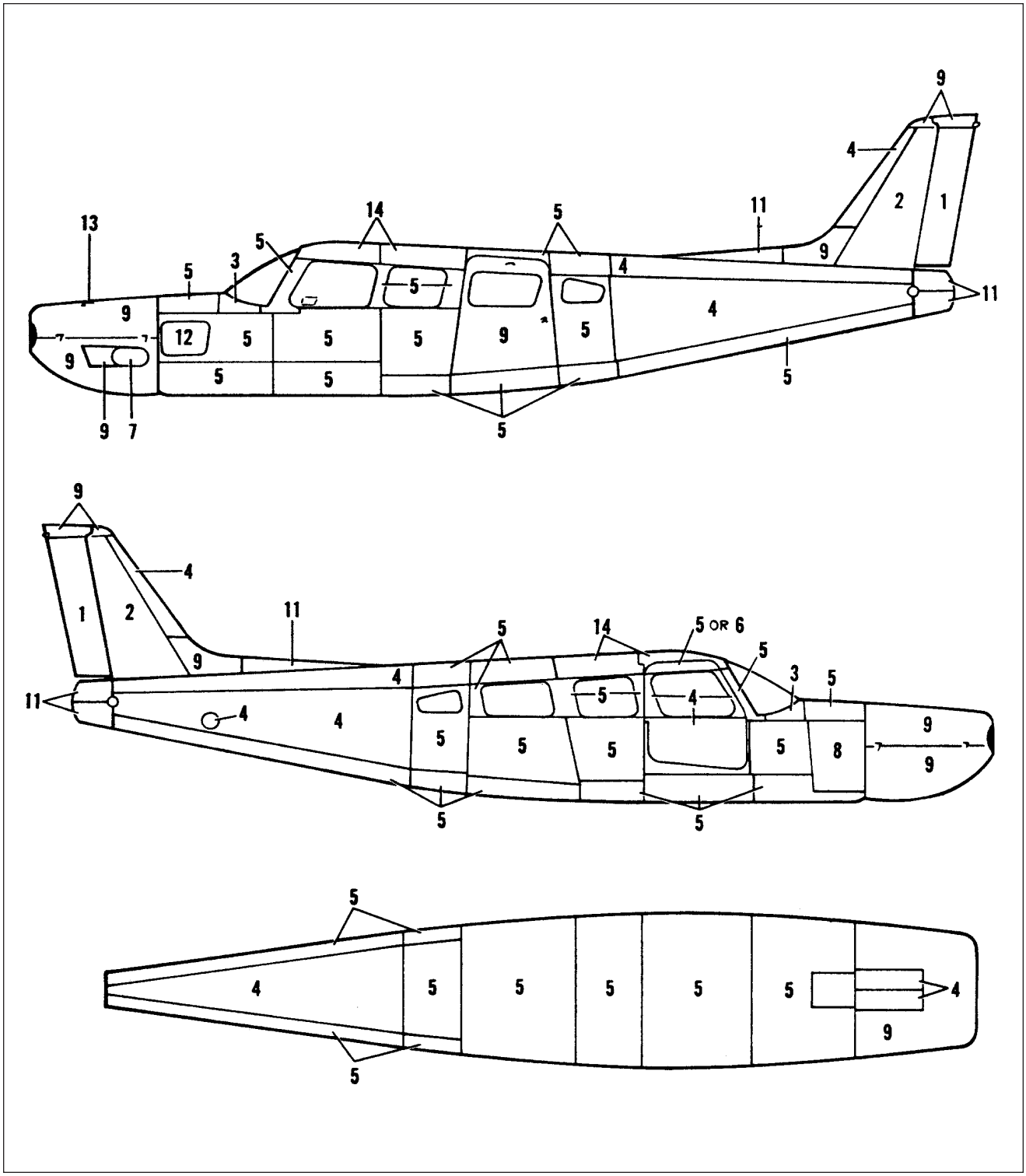

Skin Materials and Thickness
Figure 1 (Sheet 1 of 2)

STRUCTURAL REPAIRS (Cont.)

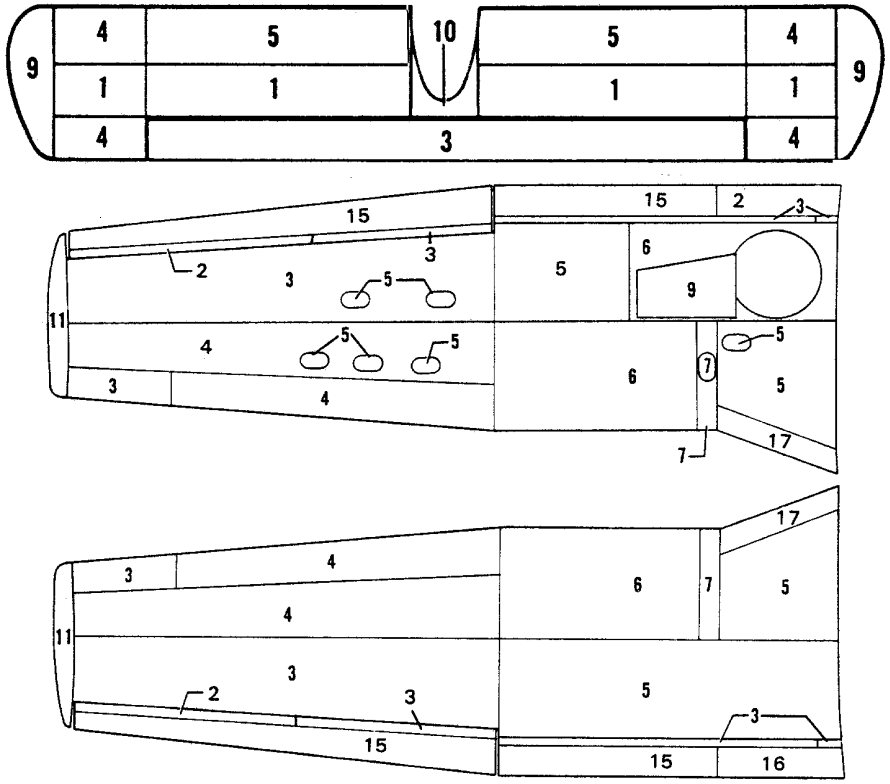

NUMBER	MATERIAL	THICKNESS
1	2024-T3	.016
2	2024-0 (1)	.020
3	2024-T3	.020
4	2024-T3	.025
5	2024-T3	.032
6	2024-T3	.040
7	2024-T3	.051
8	2024-0 (2)	.032
9	FIBERGLASS	
10	2024-T3 (2)	.020
11	THERMOPLASTIC OR FIBERGLASS	
12	2024-T3 (2)	.040
13	5052-H34	.040
14	2024-T3 (2)	.032
15	2024-T3 (1)	.016
16	2024-0 (3)	.020
17	2024-T3 (1)	.040

NOTE: LEFT WING SHOWN, RIGHT WING OPPOSITE.
1. HEAT TREAT TO 2024-T42 AFTER FORMING.
2. HEAT TREAT TO 2024-T3 AFTER FORMING.
3. HEAT TREAT TO 2024-T4 AFTER FORMING.

Skin Materials and Thickness
Figure 1 (Sheet 2 of 2)

STRUCTURAL REPAIRS (Cont.)

FIBERGLASS TOUCH-UP AND SURFACE REPAIRS

1. Remove wax, oil and dirt from around damaged area with acetone, Methylethylketone or equivalent and remove paint to gel coat.
2. Damaged area may be scraped with a fine blade knife or a power drill with a burr attachment to roughen bottom and sides of damaged area. Feather edge surrounding scratch or cavity. Do not undercut edge. (If scratch or cavity is shallow and penetrates only surface coat, continue to step 8.)
3. Pour a small amount of resin into a jar lid or on a piece of cardboard, just enough to fill area being worked on. Mix an equal amount of milled fiberglas with resin, using a putty knife or stick. Add catalyst, according to kit instruction, to resin and mix thoroughly. A hypodermic needle may be used to inject gel into small cavities not requiring fiberglas millings mixed with gel.
4. Work mixture of resin, fibers and catalyst into damaged area, using sharp point of a putty knife or stick to press it into bottom of hold and to puncture any air bubbles which may be present. Fill scratch or hole above surrounding undamaged area about 1/16 inch.
5. Lay piece of cellophane or waxed paper over repair to cut off air and start cure of gel mixture.
6. Allow gel to cure 10 to 15 minutes until it feels rubbery to touch. Remove cellophane and trim flush with surface, using a sharp razor blade or knife. Replace cellophane and allow to cure completely for 30 minutes to an hour. Patch will shrink slightly below structure surface as it cures. (If wax paper is used, ascertain wax is removed from surface.)
7. Rough up bottom and edges of hole with electric burr attachment or rough sandpaper. Feather hole into surrounding gel coat, do not undercut.
8. Pour out a small amount of resin, add catalyst and mix thoroughly, using a cutting motion rather than stirring. Use no fibers.
9. Using tip of putty knife or fingertips, fill hole to about 1/16 inch above surrounding surface with gel coat mixture.
10. Lay piece of cellophane over patch to start curing process. Repeat step 6, trimming patch when partially cured.
11. After trimming patch, immediately place another small amount of gel coat on cut edge of patch and cover with cellophane. Then, using a squeegee or back of a razor blade, squeegee level with area surrounding patch, leave cellophane on patch for one or two hours or overnight, for complete cure.
12. After repair has cured for 24 hours, sand patched area using sanding block with fine wet sand- paper. Finish by priming, again sanding and applying color coat.

FIBERBLASS FRACTURE AND PATCH REPAIRS

1. Remove wax, oil and dirt from around damaged area with acetone, methylethyketone or equivalent.
2. Using a key hole saw, electric saber saw, or sharp knife cut away ragged edges. Cut back to sound material.
3. Remove paint three inches back from around damaged area.
4. Working inside structure, bevel edges to approximately a 30 degree angle and rough-sand hole and area around it, using 80-grit dry paper. Feather back for about two inches all around hole. This roughens surface for strong bond with patch.

STRUCTURAL REPAIRS (Cont.)

FIBERBLASS FRACTURE AND PATCH REPAIRS (Cont.)

5. Cover a piece of cardboard or metal with cellophane. Tape it to outside of structure covering hole completely. Cellophane should face toward inside of structure. If repair is on a sharp contour or shaped area, a sheet of aluminum formed to a similar contour may be placed over area. Aluminum should also be covered with cellophane.
6. Prepare a patch of fiberglas mat and cloth to cover an area two inches larger than hole.
7. Mix small amount of resin and catalyst, enough to be used for one step at a time, according to kit instructions.
8. Thoroughly wet mat and cloth with catalyzed resin. Daub resin on mat first, and then on cloth. Mat should be applied against structure surface with cloth on top. Both pieces may be wet out on cellophane and applied as a sandwich. Enough fiberglas cloth and mat reinforcements should be used to at least replace amount of reinforcements removed in order to maintain original strength. If damage occurred as a stress crack, an extra layer or two of cloth may be used to strengthen area.
9. Lay patch over hole on inside of structure, cover with cellophane, and squeegee from center to edges to remove all air bubbles and assure adhesion around edge of hole. Air bubbles will show white in patch and they should all be worked out to edge. Remove excess resin before it gels on part. Allow patch to cure completely.
10. Remove cardboard or aluminum sheet from outside of hole and rough-sand patch and edge of hole. Feather edge of hole about two inches into undamaged area.
11. Mask area around hole with tape and paper to protect surface. Cut a piece of fiberglas mat about one inch larger than hole and one or more pieces of fiberglas cloth two inches larger than hole. Brush catalyst resin over hole, lay mat over hole and wet out with catalyzed resin. Use a daubing action with brush. Then apply additional layer or layers of fiberglas cloth to build up patch to surface of structure. Wet out each layer thoroughly with resin.
12. With a squeegee or broad knife, work out all air bubbles in patch. Work from center to edge, pressing patch firmly against structure. Allow patch to cure for 15 to 20 minutes.
13. As soon as patch begins to set up, but while still rubbery, take a sharp knife and cut away extra cloth and mat. Cut an outside edge of feathering. Strip cut edges of structure. Do this before cure is complete, to save extra sanding. Allow patch to cure overnight.
14. Using dry 80-grit sandpaper on a power sander or sanding block, smooth patch and blend with surrounding surface. Should air pockets appear while sanding, puncture and fill with catalyzed resin. A hypodermic needle may be used to fill cavities. Let cure and resand.
15. Mix catalyzed resin and work into patch with fingers. Smooth carefully and work into any crevices.
16. Cover with cellophane and squeegee smooth. Allow to cure completely before removing cellophane. Let cure and resand.
17. Brush or spray a coat of catalyzed resin to seal patch. Sand patch, finish by priming, again sanding and applying color coat.

– NOTE –

Brush and hands may be cleaned in solvents such as acetone or methylethylketone. If solvents are not available, a strong solution of detergent and water may be used.

THERMOPLASTIC REPAIRS

The following procedure will assist in making field repairs to items made of thermoplastic which are used throughout the airplane. A list of material needed to perform these repairs is given along with suggested suppliers of the material. Common safety precautions should be observed when handling some of the materials and tools used while making these repairs.

CHART **1**
THERMOPLASTIC REPAIR LIST OF MATERIALS

ITEMS	DESCRIPTIONS	SUPPLIERS
Buffing and Rubbing Compounds	Automotive Type - DuPone #7	DuPont Company Wilmington, DE 1998
	Ram Chemical #69 x 1	Ram Chemicals Gardena, CA 90248
	Mirror Glaze #1	Mirror Bright Polish Co., Inc. Irvin, CA 92713
Cleaners	Fantastic Spray Perchlorethylene VM&P Naptha (Lighter Fluid)	Obtain From Local Suppliers
ABS-Solvent Cements	Solarite 11 Series	Solar Compounds Corp. Linden, NJ 07036
Solvents	Methylethyl Ketone Methylene Chloride Acetone	Obtain From Local Suppliers
Epoxy Patching Compound	Solarite #400	Solar Compounds Corp. Linden, NJ 07
Hot Melt Adhesives Polyamids and Hot Melt Gun	Stick From 1/2 in. dia. 3 in. long	Sears Roebuck & Co., or most hardward stores
Hot Air Gun	Temp. Range 300° to 400°F	Local Suppliers

1. Surface Preparation:
   a. Surface dirt and paint if applied must be removed from item being repaired. Household cleaners have proven most effective in removing surface dirt.
   b. Preliminary cleaning of damaged area with perchlorethylene or VM&P Naptha will generally insure a good bond betweenn epoxy compounds and thermoplastic.

THERMOPLASTIC REPAIRS (Cont.)

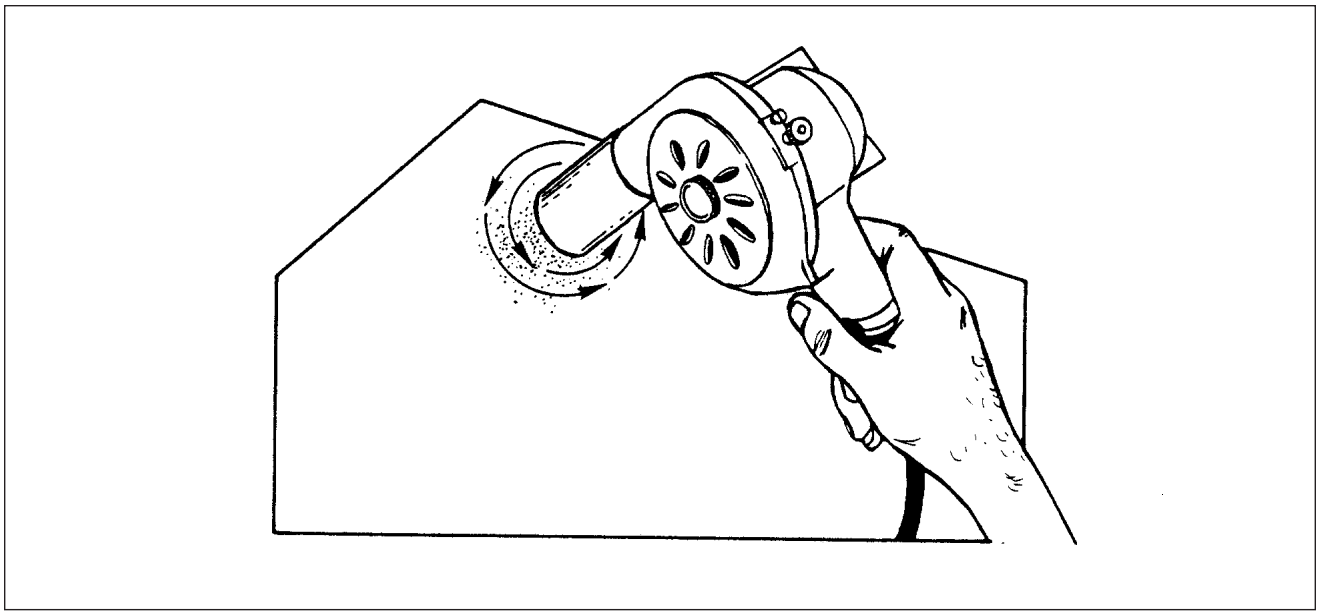

Surface Scratches, Abrasions or Ground-in-Dirt
Figure 2

2. Surface Scratches, Abrasion or Ground-in-Dirt: (Refer to Figure 2.)
   a. Shallow scratches and abraded surfaces are usually repaired by following directions on containers of conventional automotive buffing and rubbing compounds.
   b. If large dirt particles are embedded in thermoplastic parts, they can be removed with a hot air gun capable of supplying heat in temperature range of 300 to 400F. Use care not to overheat material. Hold nozzle of gun about 1/4 of an inch away from surface and apply heat with a circular motion until area is sufficiently soft to remove dirt particles.
   c. Thermoplastic will return to its original shape upon cooling.
3. Deep scratches, Shallow Nicks and Small Holes: (Less than 1 inch in diameter.) (Refer to Figure 3.)
   a. Solvent cements will fit virtually any of these applications. If area to be repaired is very small, it may be quicker to make a satisfactory cement by dissolving thermoplastic material of the same type being repaired in solvent until desired paste-like consistency is achieved.
   b. This mixture is then applied to damaged area. Upon solvent evaporation, hard durable solids remaining can easily be shaped to desired contour by filing or sanding.
   c. Solvent adhesives are not recommended for highly stressed areas, on thin walled parts or for patching holes greater than 1/4 inch in diameter.
   d. For larger damages an epoxy patching compound is recommended. This type material is a two part, fast curing, easy sanding commercially available compound.
   e. Adhesion can be increased by roughing bonding surface with sandpaper and by utilizing as much surface area for bond as possible.
   f. Patching compound is mixed in equal portions on a hard flat surface using a figure eight motion. Damaged area is cleaned with perchlorethylene or VM&P Naptha prior to applying compound. (Refer to figure 4.)
   g. A mechanical sander can be used after compound is cured, providing sander is kept in constant motion to prevent heat buildup.

THERMOPLASTIC REPAIRS (Cont.)

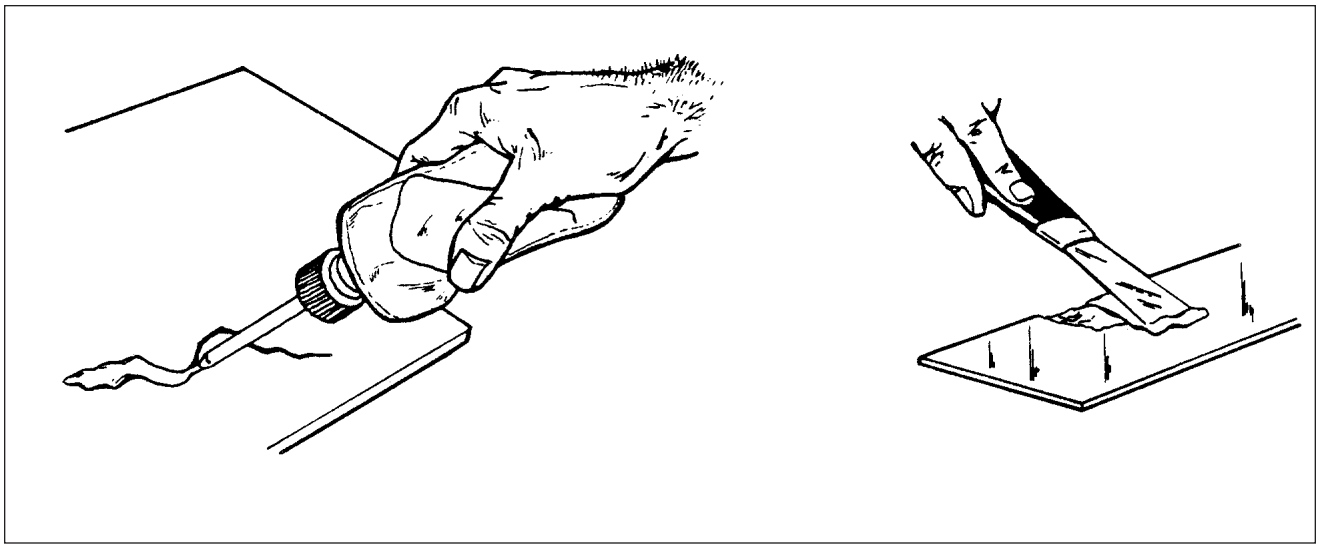

Deep Scratches, Shallow Nicks and Small Holes
Figure 3

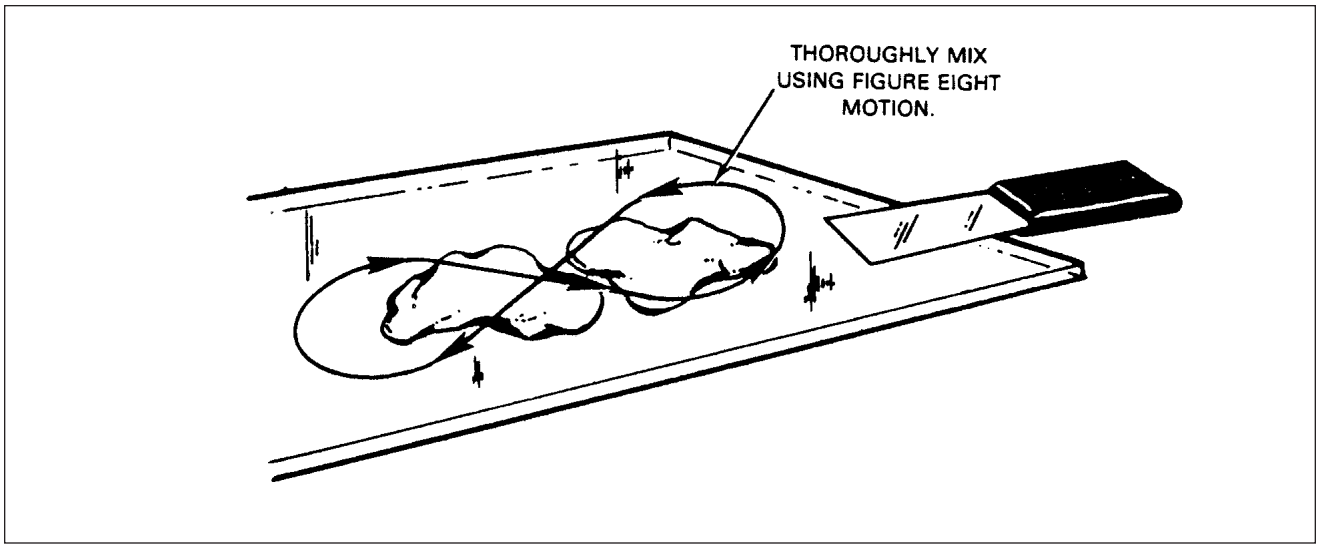

Mixing of Epoxy Patching Compound
Figure 4

h. For repairs in areas involving little or no shear stress, hot melt adhesives, polyamids which are supplied in stick form may be used. This type of repair has a low cohesive strength factor.

i. For repairs in areas involving small holes, indentations or cracks in material where high stress is apparent or thin walled sections are used, welding method is suggested.

j. Welding method requires a hot air gun and ABS rods. To weld, gun should be held to direct flow of hot air into fusion (repair) zone, heating damaged area and rod simultaneously. Gun should be moved continuously in a fanning motion to prevent discoloration of material. Pressure must be maintained on rod to insure good adhesion. (Refer to Figure 5.)

k .After repair is completed, sanding is allowed to obtain surface finish of acceptable appearance.

THERMOPLASTIC REPAIRS (Cont.)

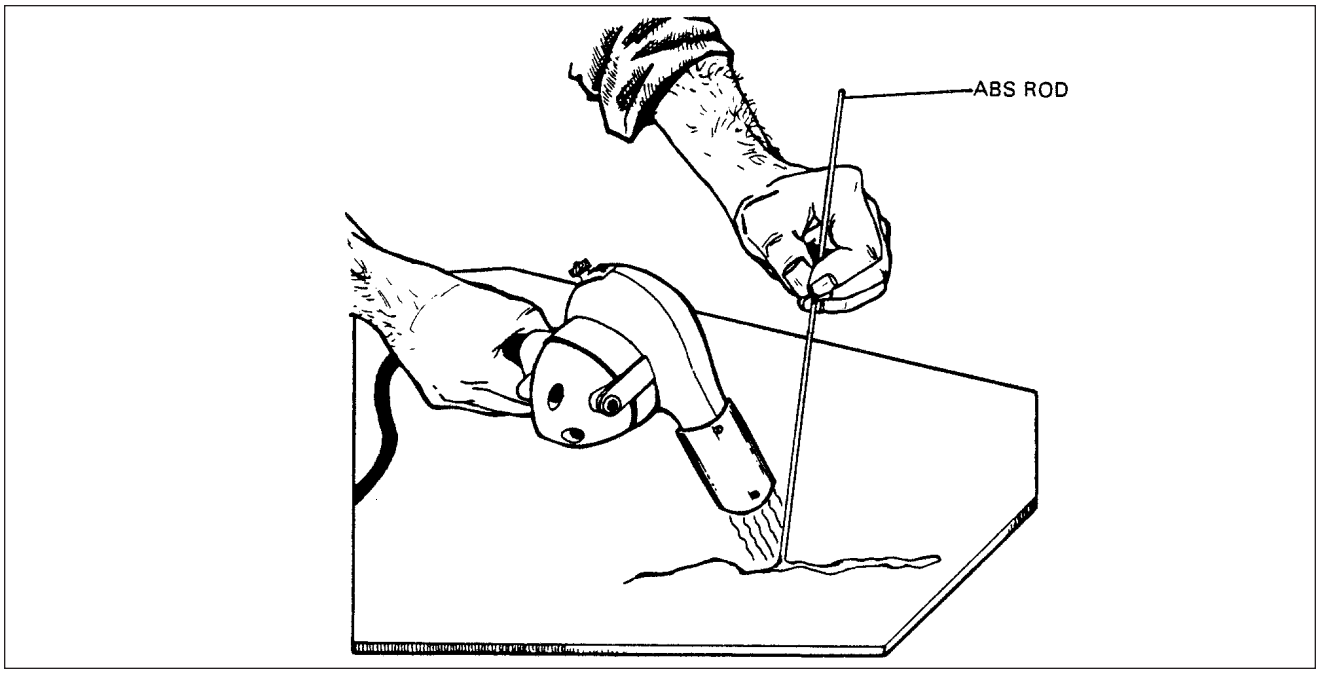

Welding Repair Method
Figure 5

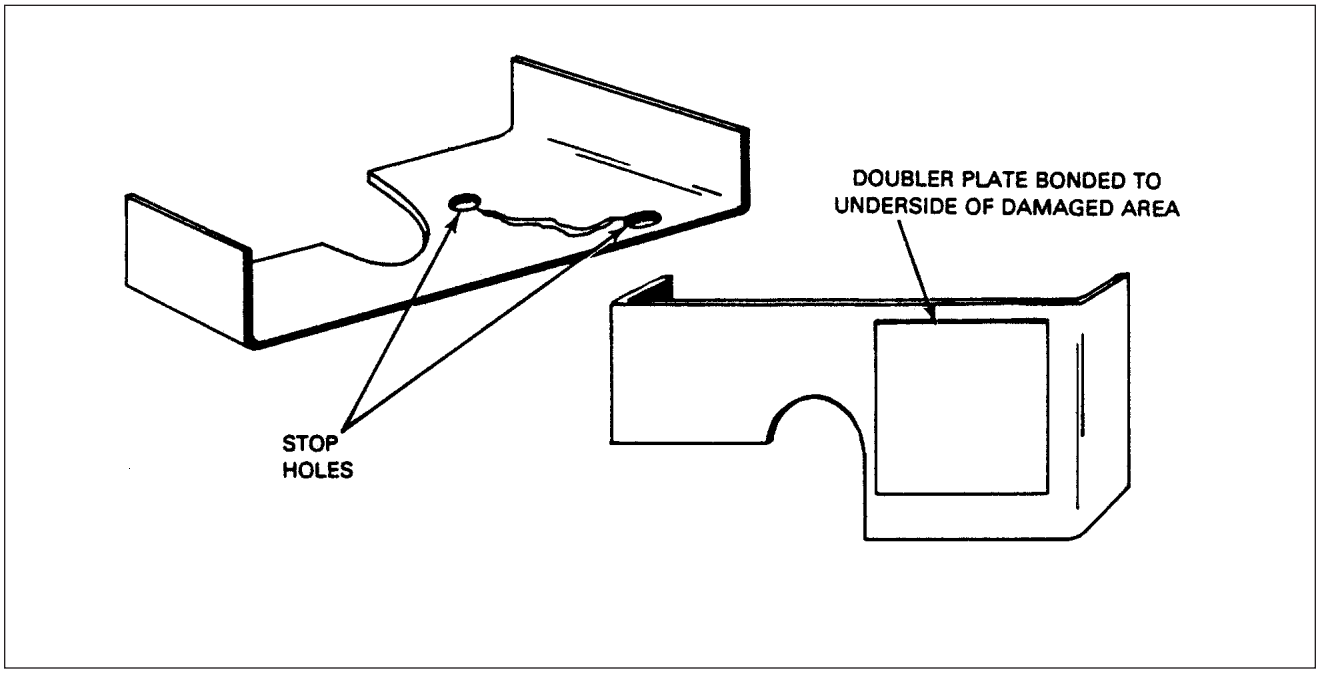

Repairing of Cracks
Figure 6

THERMOPLASTIC REPAIRS (Cont.)

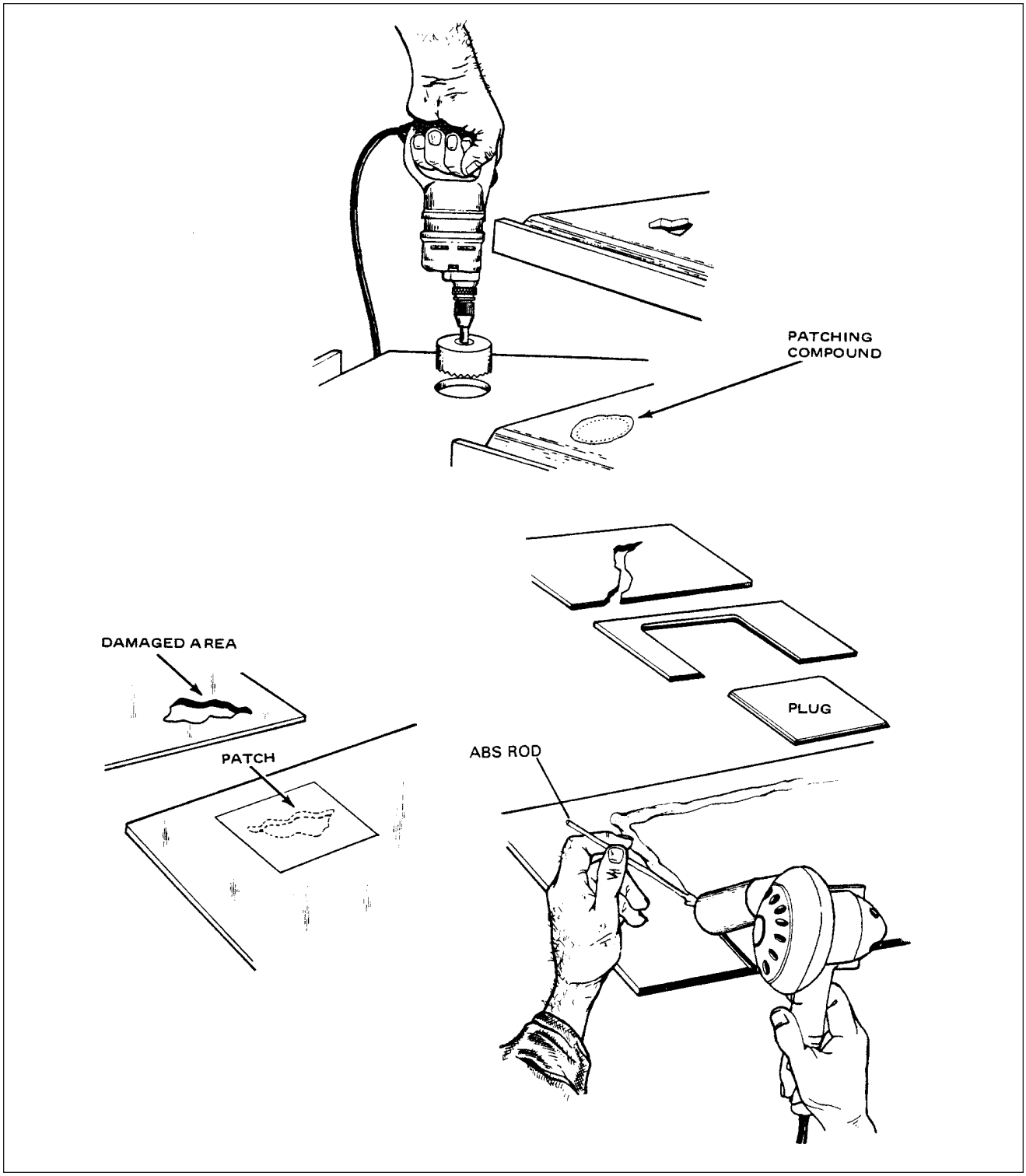

Various Repairs
Figure 7

THERMOPLASTIC REPAIRS (Cont.)

4. Cracks: (Refer to Figure 6.)
   a. Before repairing a crack in thermoplastic part, first determine what caused crack and alleviate that condition to prevent it recurring after repair is made.
   b. Drill small stop holes at each end of crack.
   c. If possible, a double plate should be bonded to reverse side of crack to provide extra strength to part.
   d. Crack should be V-grooved and filled with repair material, such as solvent cement, hot melt adhesive, epoxy patching compound or hot air welded, whichever is preferred.
   e. Affter repair has cured, it may be sanded to match surrounding finish.
5. Repairing Major Damage: (Larger than 1 inch in diameter.) (Refer to figure 7.)
   a. If possible a patch should be made of same material and cut slightly larger than section being repaired.
   b. When appearances are important, large holes, cracks, tears, etc, should be repaired by cutting out damaged area and replacing it with a piece of similar material.
   c. When cutting away damaged area, under cut perimeter and maintain a smooth edge. Patch and/or plug should also have a smooth edge to insure a good fit.
   d. Coat patch with solvent adhesive and firmly attach it over damaged area.
   e. Let patch dry for approximately one hour before any additional work is performed.
   f. Hole, etc, is then filled with repair material. A slight overfilling of repair material is suggested to allow for sanding and finishing after repair has cured. If patching compound is used, repair should be made in layers, not exceeding a 1/2 inch in thickness at a time, thus allowing compound to cure and insuring a good solid buildup of successive layers as required.
6. Stress Lines: (Refer to figure 8.)
   a. Stress lines produce a whitened appearance in a localized area and generally emanate from severe bending or impacting of material. (Refer to figure 9.)
   b. To restore material to its original condition and color, use a hot air gun or similar heating device and carefully apply heat to affected area. Do not overheat material.
7. Painting the Repair:
   a. An important factor in obtaining a quality paint finish is proper preparation of repair and surrounding area before applying any paint.
   b. It is recommended that parts be cleaned prior to painting with a commercial cleaner or a solution made from one-fourth cup of detergent mixed with one gallon of waer.
   c. Paint used for coating thermoplastic can be either lacquers or enamels depending on which is preferred by repair facility or customer. (See NOTE.)

– NOTE –

It is extremely important that solvent formulations be considered when selecting a paint, because not all lacquers or enamels can be used satisfactorily on thermoplastics. Some solvents used in paints can significantly affect and degrade plastic properties.

   d. Another important matter to consider is that hard, brittle coatings that are usually best for abrasion resistance should not be used in areas which incur high stress, flexing or impact. Such coating may crack, thus creating a weak area.

THERMOPLASTIC REPAIRS (Cont.)

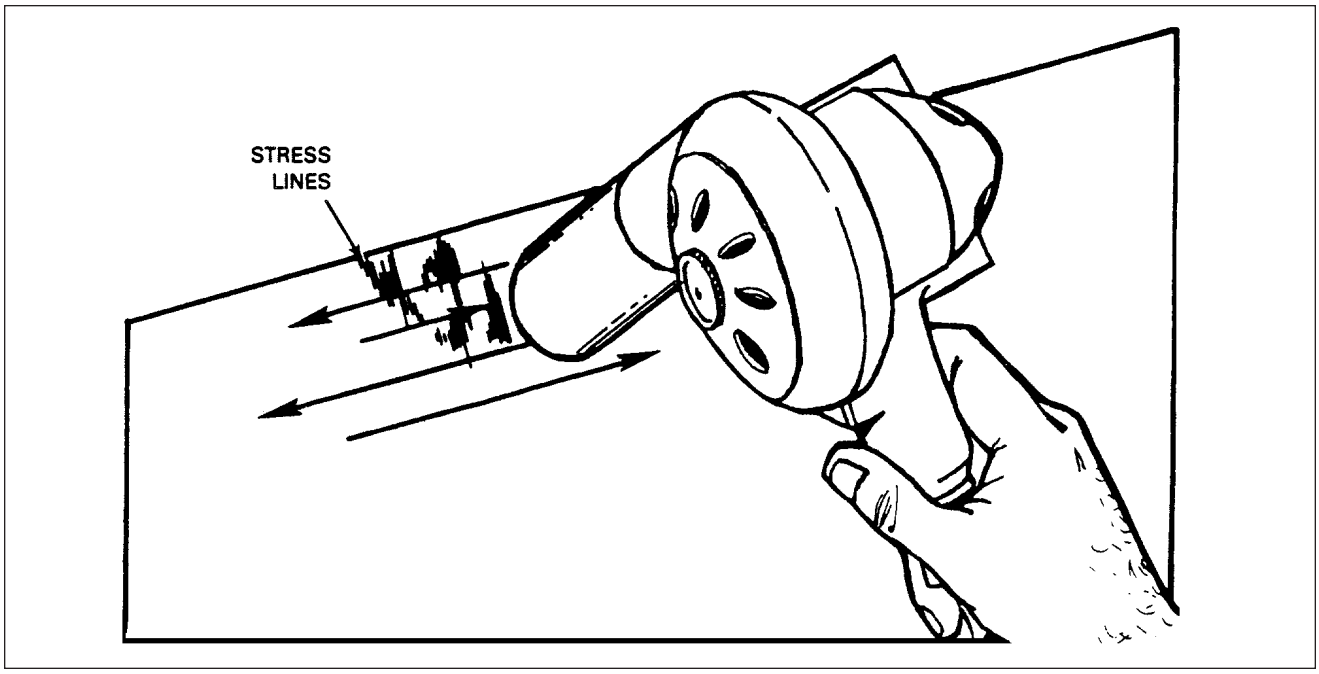

Repair of Stress Lines
Figure 8

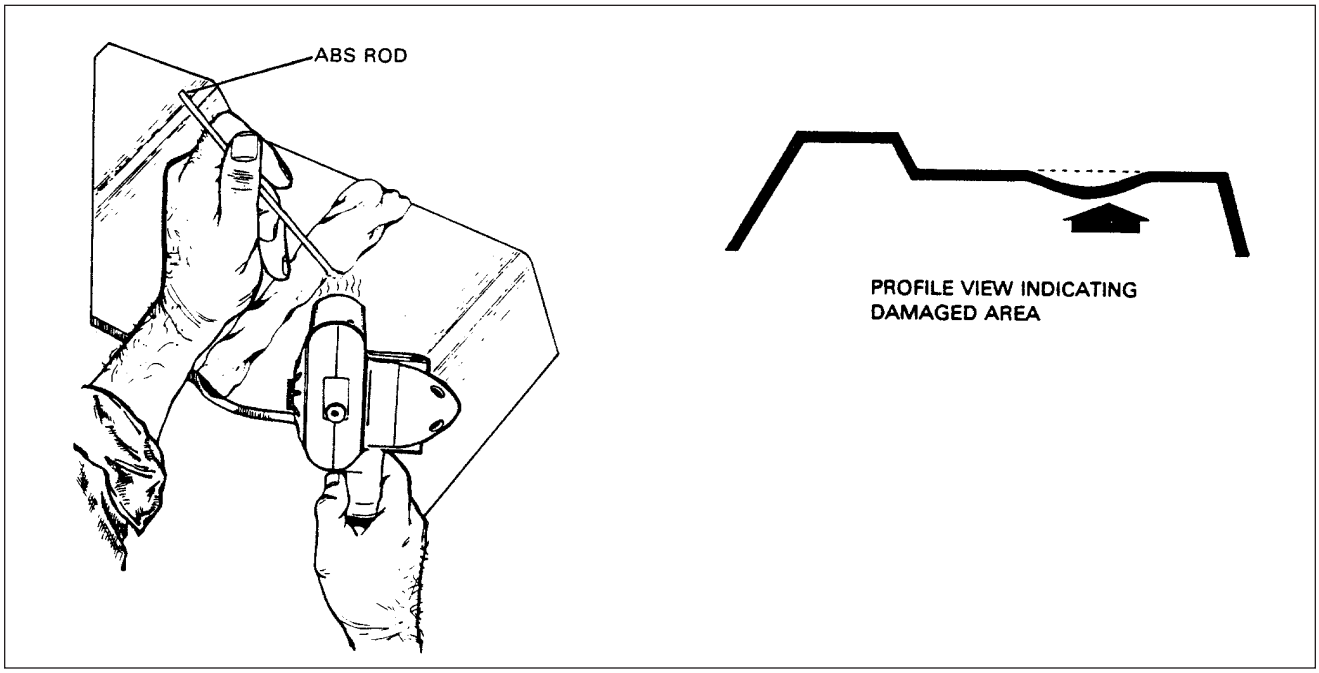

Repair of Impacted Damage
Figure 9

SAFETY WALK REPAIR

SURFACE PREPARATION

1. Clean all surfaces with a suitable cleaning solvent to remove dirt, grease and oils. Solvents may be applied by dipping, spraying or mopping.
2. Insure that no moisture remains on surface by wiping with a clean, dry cloth.
3. Outline area to which liquid safety walk compound is to be applied, and mask adjacent surfaces.

– NOTE –

Newly painted surfaces shall be allowed to dry for 2.5 hours minimum prior to application of safety walk.

PRODUCT LISTING FOR LIQUID SAFETY WALK COMPOUND

1. Suggested Solvents:
   Safety Solvent per MIL-S-18718
   Sherwin Williams Lacquer Thinner R7KC120
   Glidden Thinner No. 207
2. Safety Walk Material:
   Walkway Compound and Matting Nonslip (included in Piper Part No. 179872)

APPLICATION OF LIQUID SAFETY WALK COMPOUND

Liquid safety walk compound shall be applied in an area free of moisture for a period of 24 hours minimum after application. Do not apply when surface to be coated is below 50°F. Apply liquid safety walk compound as follows:

1. Mix and thin liquid safety walk compound in accordance with manufacturer's instructions on container.
2. Coat specified surfaces with a smooth, unbroken film of liquid safety walk compound. A nap type roller or a stiff bristle brush is recommended, using fore and aft strokes.
3. Allow coating to dry for 15 minutes to one hour before recoating or touchup, if required after application of initial coating.
4. After recoating or touchup, if one, allow coating to dry for 15 minutes to one hour before removing masking.

– NOTE –

Coated surface shall not be walked on for six hours minimum after application of final coating.

SAFETY WALK REPAIR (Cont.)

SURFACE PREPARATION FOR PRESSURE SENSITIVE SAFETY WALK

Areas to which pressure sensitive safety walk is to be installed must be free from all contaminates and no moisture present. If liquid safety walk is installed the area must be prepared as follows:

1. Area must be masked off to protect painted surfaces.
2. Apply suitable stripper MEK Federal Spec. TT-M-261, U.S. Rubber No. 3339 to windwalk compound. As compound softens remove by using putty knife or other suitable tool.
3. Area must be clean and dry prior to painting.
4. Prime and paint area.

= NOTE =

Newly painted surfaces shall be allowed to dry for 2.5 hours minimum prior to application of safety walk.

APPLICATION OF PRESSURE SENSITIVE SAFETY WALK

Wipe area with a clean dry cloth to insure that no moisture remains on surface. Do not apply when surface temperature is below 50F. Apply pressure sensitive safety walk as follows:

1. Peel back full width of protective liner approximately 2 inches from leading edge of safety walk.
2. Apply safety walk to wing area, begin at leading edge, insure proper alignment and position from wing lap.
3. Remove remaining protective liner as safety walk is being applied from front to back of wing area.
4. Roll firmly with a long handled cylindrical brush in both lengthwise directions. Make sure all edges adhere to wing skin.
5. Install and rivet leading edge retainer.

– END –

CHAPTER

52

DOORS

CHAPTER 52 - DOORS

TABLE OF CONTENTS/EFFECTIVITY

CHAPTER SECTION	SUBJECT	GRID NO.	EFFECTIVITY
52-00-00	GENERAL	3H16	July 1, 1993
52-10-00	PASSENGER/CREW	3H18	July 1, 1993
52-10-00	Cabin Door	3H18	July 1, 1993
52-10-00	Removal of Door	3H18	July 1, 1993
52-10-00	Installation of Door	3H18	July 1, 1993
52-10-00	Adjustment of Door	3H18	July 1, 1993
52-10-00	Door Latch Mechanism	3H18	July 1, 1993
52-10-00	Removal of Door Latch Mechanism	3H18	July 1, 1993
52-10-00	Installation of Door Latch Mechanism	3H18	July 1, 1993
52-10-00	Adjustment of Door Latch Mechanism	3H18	July 1, 1993
52-10-00	Door Lock Assembly	3H19	July 1, 1993
52-10-00	Removal of Door Lock Assembly	3H19	July 1, 1993
52-10-00	Installation of Door Lock Assembly	3H19	July 1, 1993
52-10-00	Door Safety Latch	3H19	July 1, 1993
52-10-00	Removal of Door Safety Latch	3H19	July 1, 1993
52-10-00	Installation of Door Safety Latch	3H19	July 1, 1993
52-10-00	Adjustment of Door Safety Latch	3H19	July 1, 1993
52-10-00	Replacement of Door Snubber Seal	-3H19	July 1, 1993
52-30-00	CARGO	2I2	July 1, 1993
52-30-00	Baggage Door	2I2	July 1, 1993
52-30-00	Removal of Baggage Door	2I2	July 1, 1993
52-30-00	Installation of Baggage Door	2I2	July 1, 1993
52-30-00	Baggage Door Lock Assembly	2I2	July 1, 1993
52-30-00	Removal of Baggage Door Lock Assembly	2I2	July 1, 1993
52-30-00	Installation of Baggage Door Lock Assembly	2I2	July 1, 1993
52-30-00	Baggage Door Hinge	2I2	July 1, 1993
52-30-00	Removal of Baggage Door Hinge	2I2	July 1, 1993
52-30-00	Installation of Baggage Door Hinge	2I2	July 1, 1993

GENERAL

This airplane is provided with a crew entrance door located on the forward right side of fuselage and a passenger compartment door on left side of fuselage aft of wing trailing edge. A rear baggage compartment door adjoins passenger compartment door. Forward baggage compartment door is located on right side of fuselage at station 41.1.

– END –

INTENTIONALLY LEFT BLANK

PASSENGER/CREW

CABIN DOOR

REMOVAL OF DOOR

1. Remove clevis bolt, washer and bushing from door holder assembly.
2. Remove cotter pins, clevis pins and washers from serrated door hinges.
3. Remove door from airplane.

INSTALLATION OF DOOR

1. Insert door into position and install washers, clevis pins and cotter pins on door hinges.
2. For adjustment of door, refer to Adjustment of Door.
3. Hook up and install clevis bolt, bushing and washer into door holder assembly.

ADJUSTMENT OF DOOR

1. To acquire proper vertical adjustment of door, insert necessary washer combination between cabin door hinge and fuselage bracket assembly.
2. Additional adjustments may be made by tapping out serrated door hinge bushings and rotating them to obtain hinge centerline location that will provide proper door fit.
3. To ensure long life of door seals and improve sealing characteristics, it is recommended they be lubricated with a fluorocarbon or similar dry lubricant in a spray can.

DOOR LATCH MECHANISM

REMOVAL OF DOOR LATCH MECHANISM

1. Remove door latch mechanism by removing door trim upholstery and screws that attach latch plate and latch mechanism to door.
2. Disconnect latch pull rod from inside door handle.
3. Remove complete latch mechanism.

INSTALLATION OF DOOR LATCH MECHANISM

1. Place latch assembly into position on door.
2. Connect latch pull rod to inside door handle.
3. Replace screws that attach latch plate and mechanism to door. Install door trim upholstery and secure with screws.

ADJUSTMENT OF DOOR LATCH MECHANISM

To adjust door latch, loosen screws on striker plate, make necessary adjustment, and retighten screws.

DOOR LOCK ASSEMBLY

REMOVAL OF DOOR LOCK ASSEMBLY

1. Remove door trim upholstery by removing attachment screws.
2. Loosen nut on lock assembly and remove lock by turning it sideways.

INSTALLATION OF DOOR LOCK ASSEMBLY

1. Install lock in door by turning it sideways and placing it through opening provided.
2. Replace nut on back of lock assembly and tighten.
3. Replace door trim upholstery and secure with attachment screws.

DOOR SAFETY LATCH

REMOVAL OF DOOR SAFETY LATCH

1. Remove the two handles and five screws holding pan on inside of door.
2. Remove pan and pull latch assembly through opening on door.

INSTALLATION OF DOOR SAFETY LATCH

1. Place latch assembly into position for installation.
2. Replace pan and install five screws and handles.
3. Check latch assembly for operation and be certain that it is free of rubbing on trim panels.

ADJUSTMENT OF DOOR SAFETY LATCH

1. To adjust door safety latch remove two screws from latch plate found at top of door opening.
2. Remove plate and turn loop assembly in or out to make necessary adjustments.
3. Replace latch plate and secure with two attachment screws.

REPLACEMENT OF DOOR SNUBBER SEALS

Door snubber seals have been incorporated in door jambs to improve on door sealing. For those aircraft equipped as such, the following procedure should be used. If snubbers are not installed, the ``Field Kit 763-861V for Improved Sealing'' should be consulted for installation, if so desired.

– NOTE –

If existing seal is torn or badly deteriorated, it should be replaced.If seal is found to be loose or bond is ``marginal'', it should be rebonded. Adhesives listed below are recommended for rebonding:

3M EC 1300L (Preferred)
Proco Adhesive 6205-1
Scotch Grip 2210

REPLACEMENT OF DOOR SNUBBER SEALS (Cont.)

1. To replace door snubber seal, proceed with the following steps:
   a. Remove windlace retainers, "roll" back windlace (tape to secure) out of way, remove all scuff plates and disconnect door holder.
   b. Remove all striker plates except where shown in Figure 1, Section A-A.
   c. With a plastic scraper or other appropriate instrument, scrape off snubber while applying mineral spirits as necessary to loosen strip and wipe off excess adhesive with a clean cloth.
2. Install snubber as follows:

a. If door jamb is flaking or excessively scuffed, rub down with wet and dry emery cloth. Clean surface using Prep-Sol or equivalent cleaner which will not leave an oily residue.
b. Mask jamb as shown in View E of Figure 1.
c. Apply adhesive to door jamb as shown in View E of Figure 1.
d. Apply adhesive to inside surface of snubber.
e. Position snubber with protruding leg facing outboard beginning at lower center of door jamb and work progressively around jamb applying pressure to snubber to remove any trapped air and to ensure a proper bond. Do Not prestretch snubber as this can induce cracks.

– NOTE –

Normal tack time for 3M EC 1300L is 30-45 minutes at 75°F. However, adhesive that has "set" may be reactivated by a clean rag moistened with Toluol or MEK.

f. It takes approximately 1 day for bond to cure. Do Not allow door to close during this period. It is recommended that door be left open as long as possible to effect curing.
g. Remove masking tape if used and clean off excessive adhesive smears using Mineral Spirits or Toluol and a clean cloth. Install striker plates and windlacing. Cut snubber for aft cabin door as shown in Figure 1.
h. Check that doors close properly and readjust as necessary to achieve a flush fit. Latching effort must not have increased.
i. With all hardware and plates installed, coat snubbers with silicone.

REPLACEMENT OF DOOR SNUBBER SEALS (Cont.)

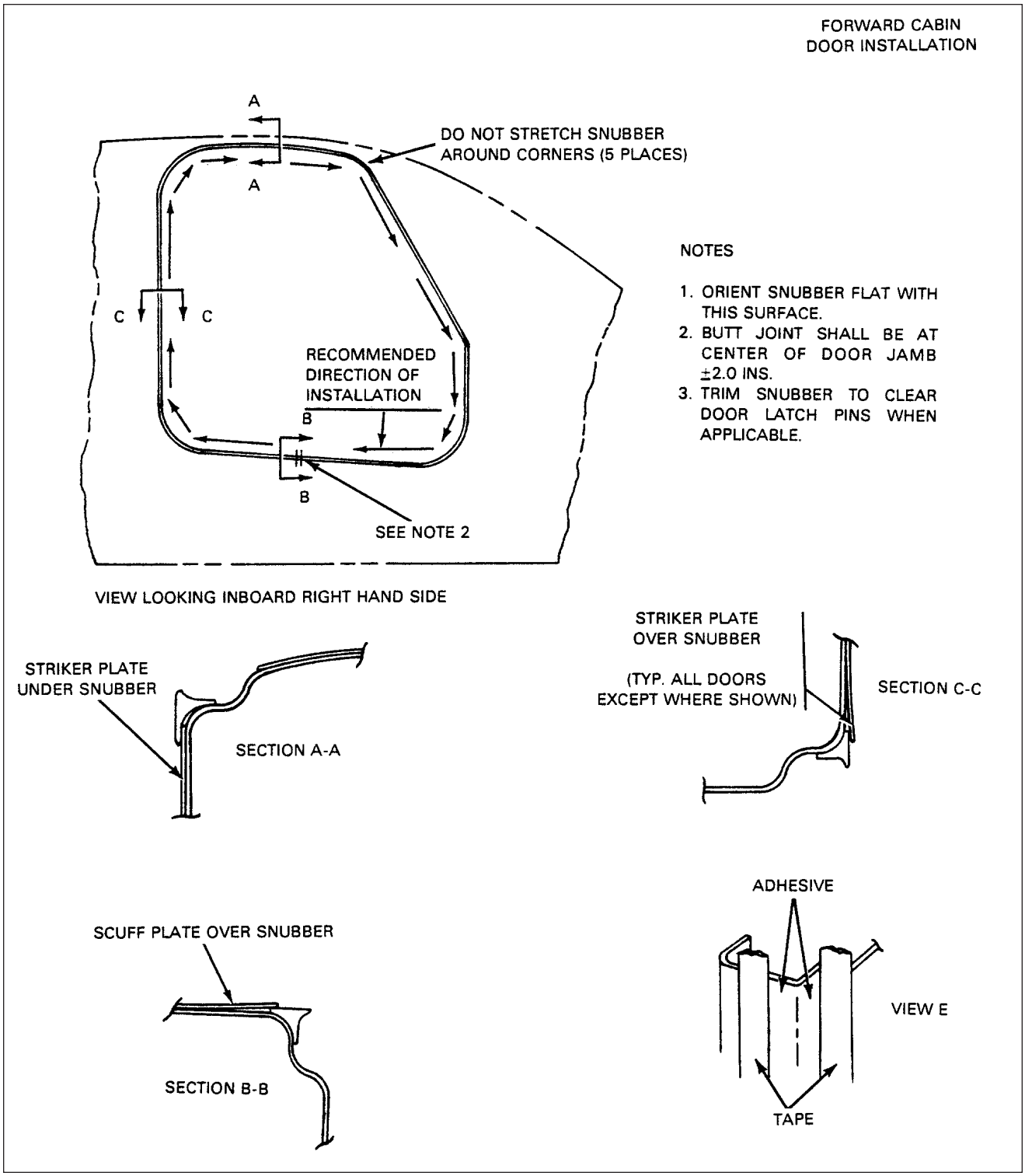

Snubber Installation (Sheet 1 of 3)
Figure 1

REPLACEMENT OF DOOR SNUBBER SEALS (Cont.)

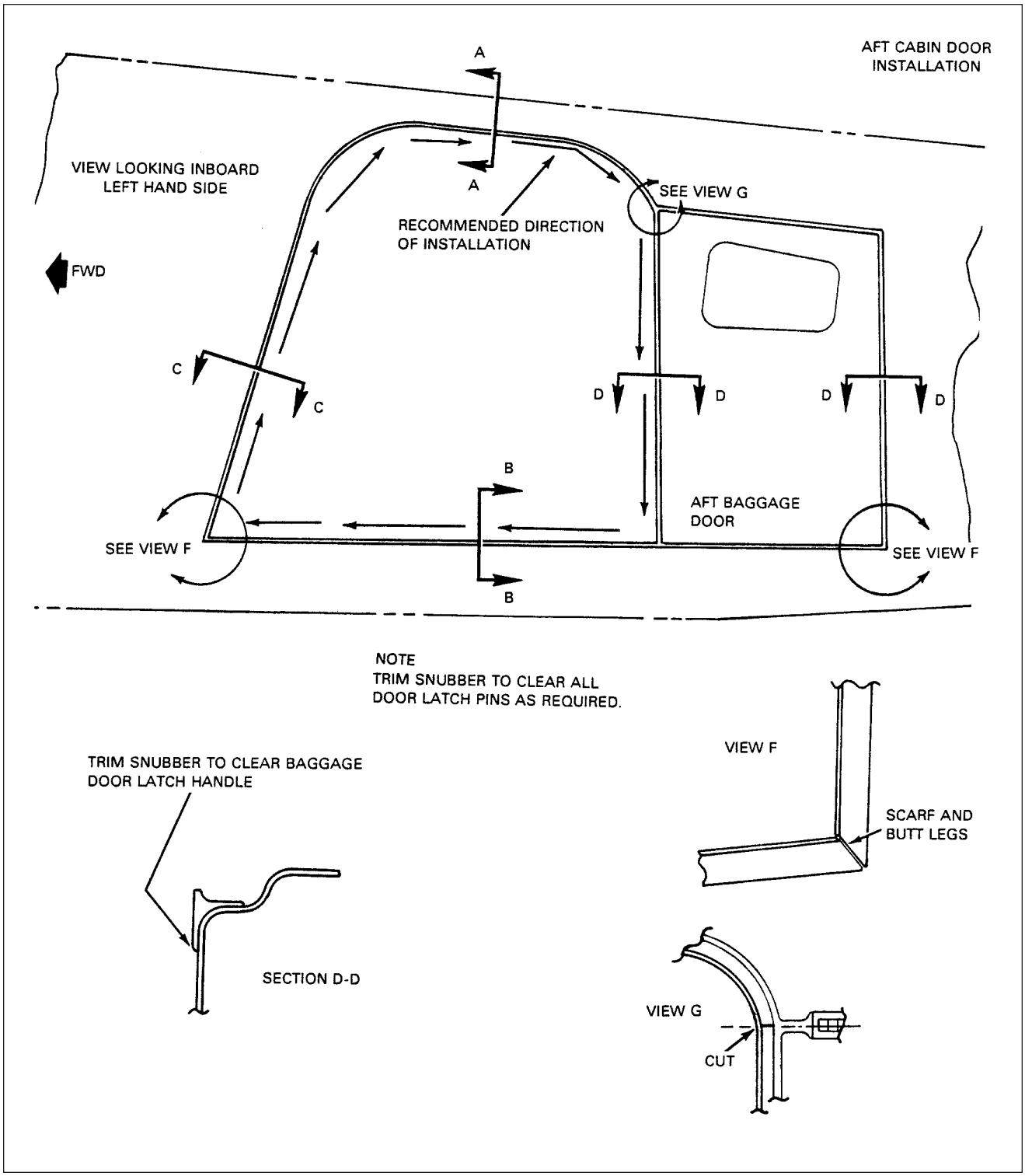

Snubber Installation (Sheet 2 of 3)
Figure 1

REPLACEMENT OF DOOR SNUBBER SEALS (Cont.)

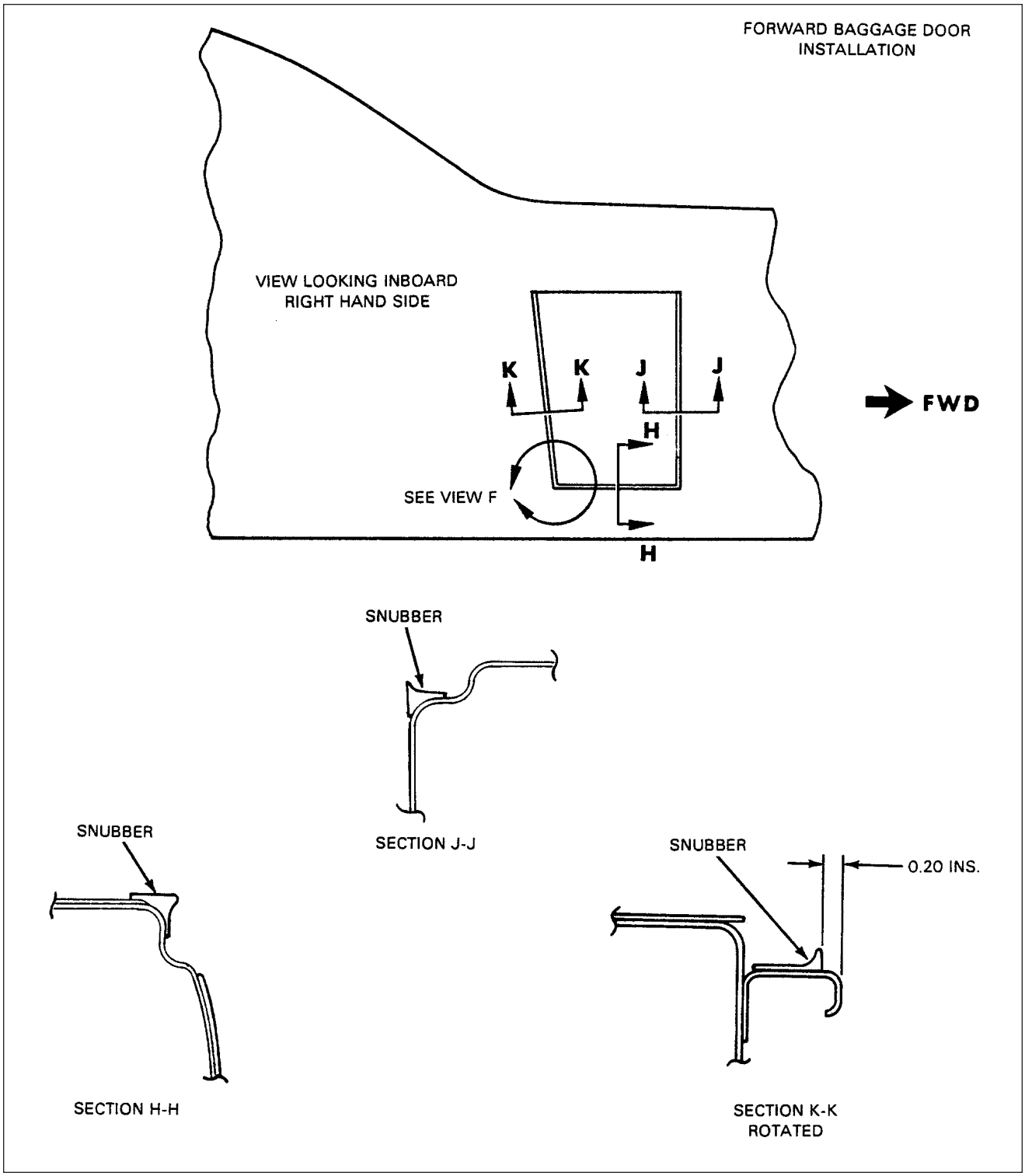

Snubber Installation (Sheet 3 of 3)
Figure 1

INTENTIONALLY LEFT BLANK

INTENTIONALLY LEFT BLANK

CARGO

BAGGAGE DOOR

REMOVAL OF BAGGAGE DOOR

With door open remove hinge pin from hinge and remove the door.

INSTALLATION OF BAGGAGE DOOR

Place door in position so that hinge halves are properly matched and install hinge pin. It will not be necessary to replace hinge pin with a new pin if it is free of bends and wear.

BAGGAGE DOOR LOCK ASSEMBLY

REMOVAL OF BAGGAGE DOOR LOCK ASSEMBLY

1. With door open remove nut from back of lock assembly by use of a special made wrench. (This tool may be fabricated from dimensions given in Chapter 95.)
2. Remove lock assembly through front of door.

INSTALLATION OF BAGGAGE DOOR LOCK ASSEMBLY

1. Place lock into position for installation.
2. Install nut on lock assembly and tighten with use of a special wrench.

BAGGAGE DOOR HINGE

REMOVAL OF BAGGAGE DOOR HINGE

1. Remove door from airplane as described in Removal of Baggage Door.
2. Remove hinge half from airplane or door by drilling out rivets and removing hinge.

INSTALLATION OF BAGGAGE DOOR HINGE

1. Place hinge halves together and install hinge pin.
2. Install door into closed position and drill two end rivet holes and install rivets.
3. Operate door and check for proper fit and installation. Drill remaining holes and install rivets.

– END –

INTENTIONALLY LEFT BLANK

CHAPTER

55

STABILIZERS

CHAPTER 55 - STABILIZERS

TABLE OF CONTENTS/EFFECTIVITY

CHAPTER SECTION	SUBJECT	GRID NO.	EFFECTIVITY
55-10-00	STABILATOR	3I6	July 1, 1993
55-10-00	Removal and Installation of Stabilator	3I6	July 1, 1993
55-10-00	Checking Control Surface Free Play	3I6	July 1, 1993
55-10-00	Balancing	3I9	July 1, 1993
55-10-00	Balancing Equipment	3I9	July 1, 1993
55-10-00	Balancing Stabilator	3I9	July 1, 1993
55-30-00	VERTICAL STABILIZER	3I12	July 1, 1993
55-30-00	Removal and Installation of Vertical Fin	3I12	July 1, 1993
55-40-00	RUDDER	3I14	July 1, 1993
55-40-00	Removal and Replacement of Rudder	3I14	July 1, 1993
55-40-00	Balancing Rudder	3I15	July 1, 1993

STABILATOR

REMOVAL AND INSTALLATION OF STABILATOR (Refer to Figure 1)

– CAUTION –

For proper inspection of the stabilator attachment fittings, refer to latest revision of Piper Service Bulletin 856. The complete stabilator assembly can be removed by following the procedure given below:

1. Remove the tail cone assembly.
2. Relieve the tension on the trim cable and remove the trunnion assembly.
3. From inside the fuselage, disconnect the two stabilator control cables from the stabilator balance arm assembly.
4. Remove the two hinge bolts at the pivot points and remove the stabilator as a complete assembly.
5. Reinstall the stabilator in reverse of removal instructions. Tension trim cable and stabilator control cables to specifications given in Chapter 27.

CHECKING CONTROL SURFACES FREE PLAY

The following checks are recommended before balancing to ascertain amount of free play in stabilator trim tab and aileron:

1. Stabilator: Check the stabilator for any free play at its attachment points by grasping each half near the tip and gently trying to move it up and down, fore and aft, and in and out. No play is allowed.
2. Stabilator Trim Tab: Set the stabilator trim tab in neutral position. This neutral position is determined with the airplane properly rigged per instructions given in Chapter 27 of this Service Manual and the trim indicator at its neutral position. Obtain a straightedge long enough to extend from the ground up to a few inches above the trim tab trailing edge. Place the straightedge next to the trim tab inboard (center) trailing edge, secure the stabilator in neutral and grasping the tab, gently move it up and down, mark the limit of tab free play on the straightedge. The overall travel (free play) must not exceed 0.15 of an inch. The use of a dial indicator and fixed stand is recommended.

STABILATOR (Cont.)

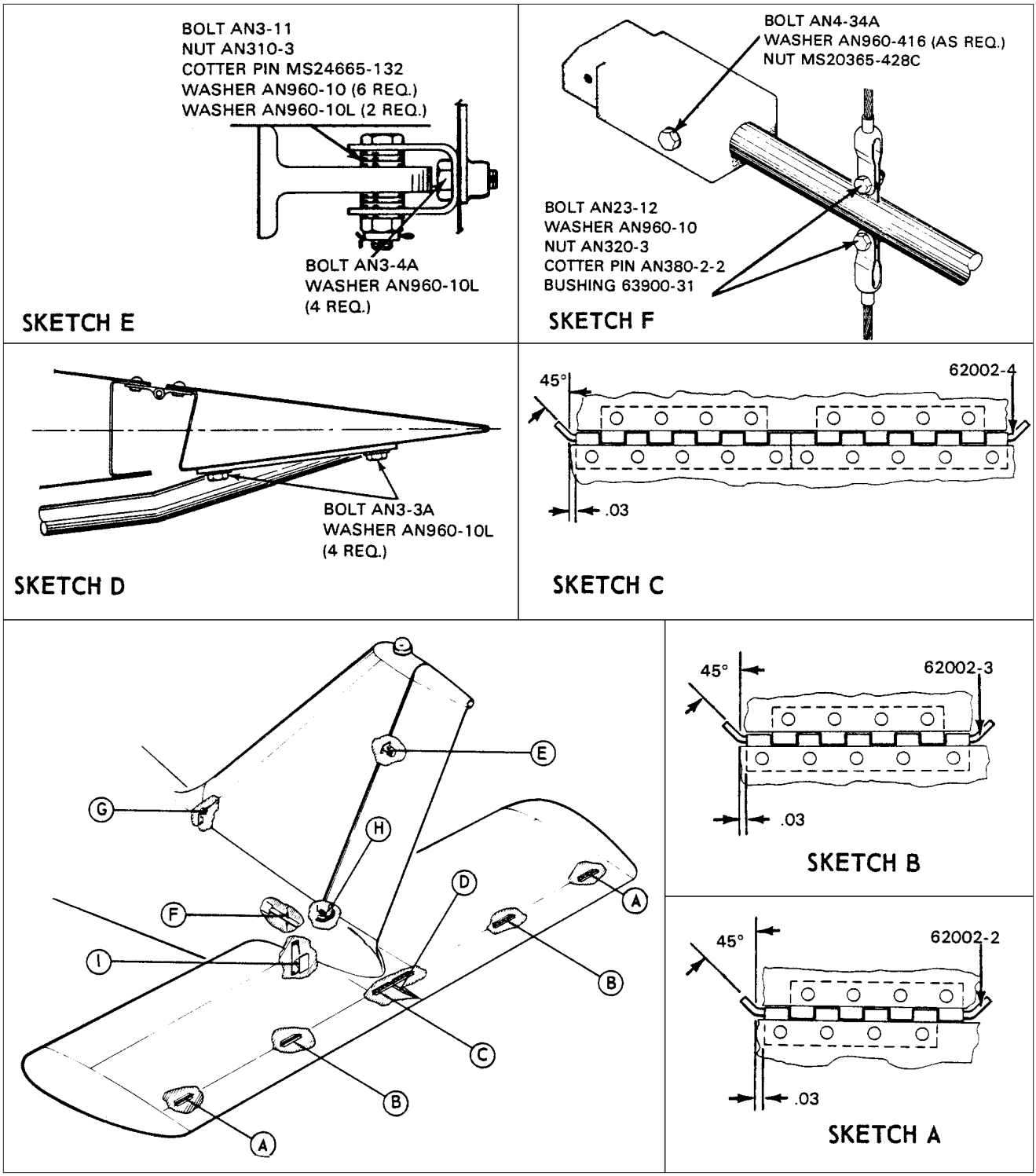

Empennage Group
Figure 1 (Sheet 1 of 2)

STABILATOR (Cont.)

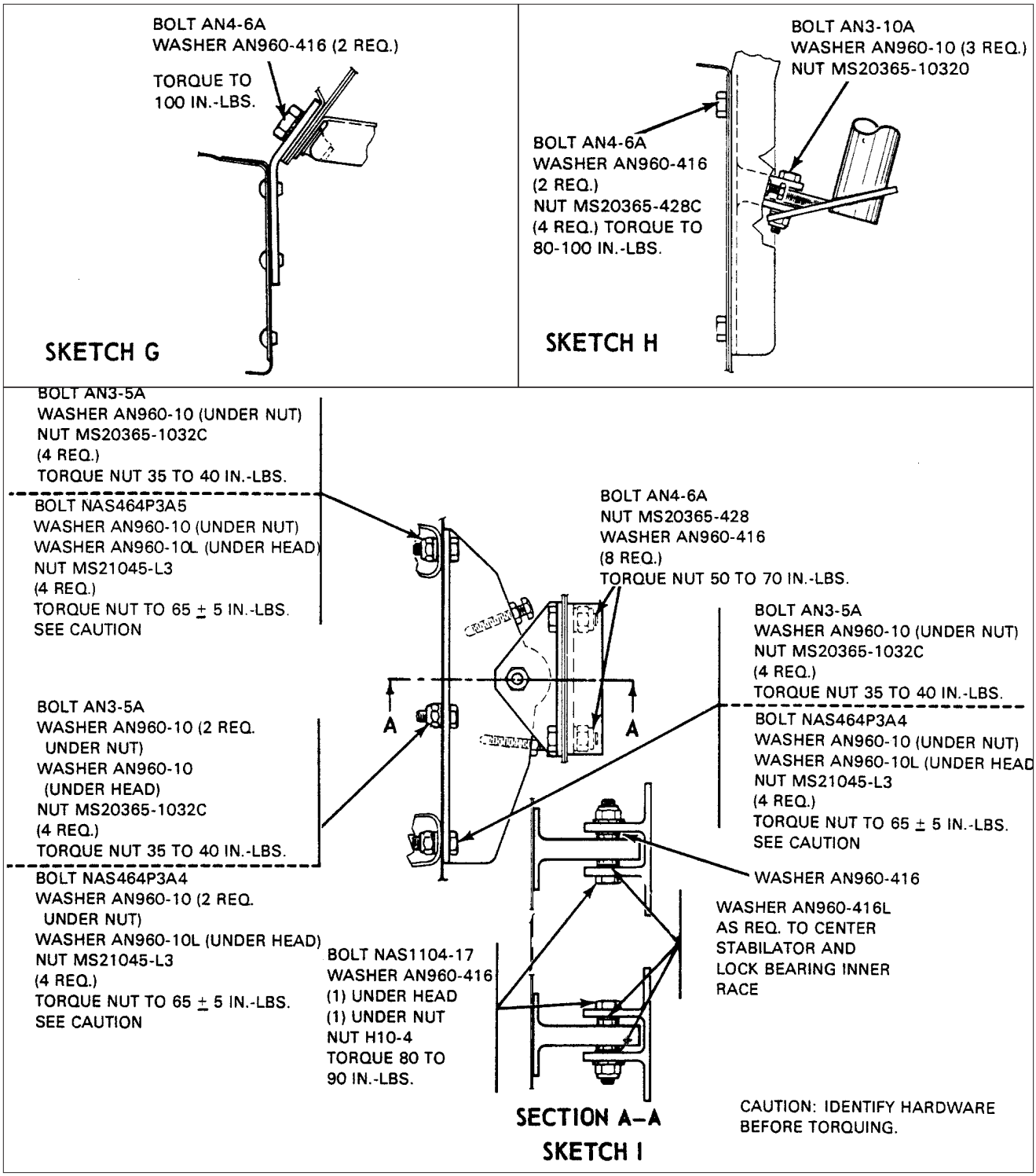

Empennage Group
Figure 1 (Sheet 2 of 2)

STABILATOR (Cont.)

BALANCING)

BALANCING EQUIPMENT (Refer to Chapter 95)

The balancing must be done using a suitable tool capable of measuring unbalance in inch-pounds from centerline of control surface hinge pin. A suggested tool configuration is shown in Chapter 95. Other tool configurations may be used, provided accuracy is maintained and recalibration capability is provided. The tool shown in Chapter 95 may be calibrated by placing it on the control surface to be balanced with balance points over control surface hinge centerline and balance bar parallel to cord line. Position trailing edge support to align tool with control surface cord line and secure in this position. Remove tool without disturbing trailing edge support and balance tool by adding weight to light end as required. (Movable weight must be at centerline.) Place tool on control surface perpendicular to hinge centerline. Read scale when bubble level has been centered by adjustment of movable weight.

– WARNING –

All control surfaces that have been replaced, repainted, or repaired, must be rebalanced according to the procedures in this manual.

BALANCING STABILATOR (Refer to Figure 2)

To balance stabilator, assembly must be complete including trim tab, tab pushrod and end bearing, stabilator tips and all attaching screws. Before balancing, tape trim tab in neutral position with a small piece of tape. Place complete assembly on knife edge supports in a draft-free beam perpendicular to hinge centerline. Do not place tool on trim tab. Calibrate tool as described in Balancing Equipment. Read scale when bubble level has been centered by adjustment of movable weight and determine static balance limit. If static balance is not within limits given, proceed as follows:

1. If the stabilator is out of limits on the leading edge heavy side, remove balance plates from the mass balance weight until the static balance is within limits.
2. If stabilator is out of limits on trailing edge heavy side, add balance plates (4 maximum) to mass balance weight until static balance is within limits.

STABILATOR (Cont.)

BALANCING (Cont.)

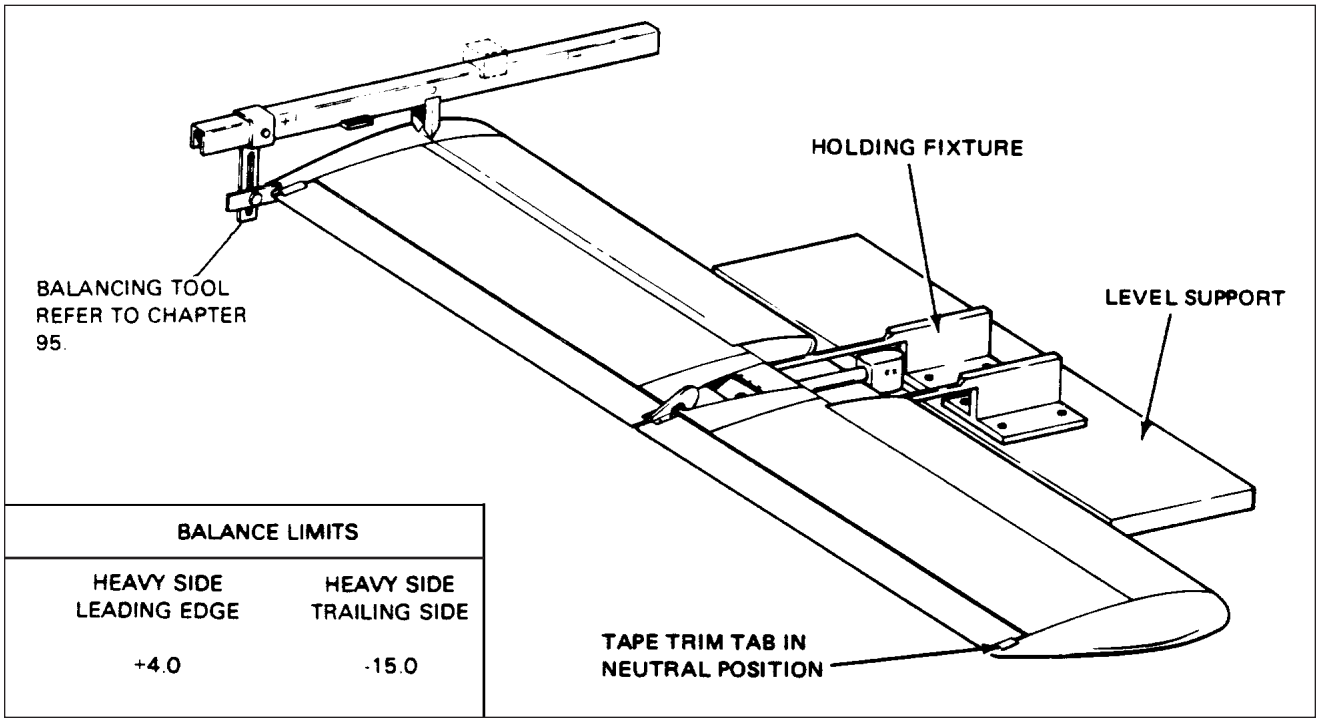

BALANCE LIMITS	
HEAVY SIDE LEADING EDGE	HEAVY SIDE TRAILING SIDE
+4.0	-15.0

Stabilator Balancing
Figure 2

– END –

INTENTIONALLY LEFT BLANK

VERTICAL STABILIZER

REMOVAL AND INSTALLATION OF VERTICAL FIN (Refer to Figure 1.)

1. Remove tail cone fairing and fairing at forward edge of fin.
2. Remove rudder.
3. Disconnect antenna wire from antenna assembly, attach a fish line to antenna cable before removing it from fin.
4. Separate stabilator trim cable at turnbuckle, and remove cable from trim mechanism.
5. Remove one bolt at leading edge of fin.
6. Remove the two bolts which secure trim mechanism to fin spar. Remove the four bolts which secure fin spar to aft bulkhead. Remove fin.
7. Install fin in reverse of removal instruction using Figure 1 as reference for proper hardware and torques. Check all bolts for safety.

– NOTE –

Modifications to fuselage are permissable if they do not involve alterations to primary structure. It is recommended that manufacturer be contacted for information regarding specific alterations proposed.

– END –

INTENTIONALLY LEFT BLANK

RUDDER

REMOVAL AND REPLACEMENT OF RUDDER (REFER TO FIGURE 55-1.)

1. Remove tail cone fairing.
2. Disconnect the two control cables from rudder horn.
3. Disconnect rudder from lower rudder hinge bracket.
4. Remove the one remaining hinge bolt. Disconnect tail light electrical wire and remove rudder.
5. Install rudder in reverse of removal, check all bolts and pins for safety.

– WARNING –

All control surfaces that have been replaced, repainted, or repaired, must be rebalanced according to the procedures in this manual.

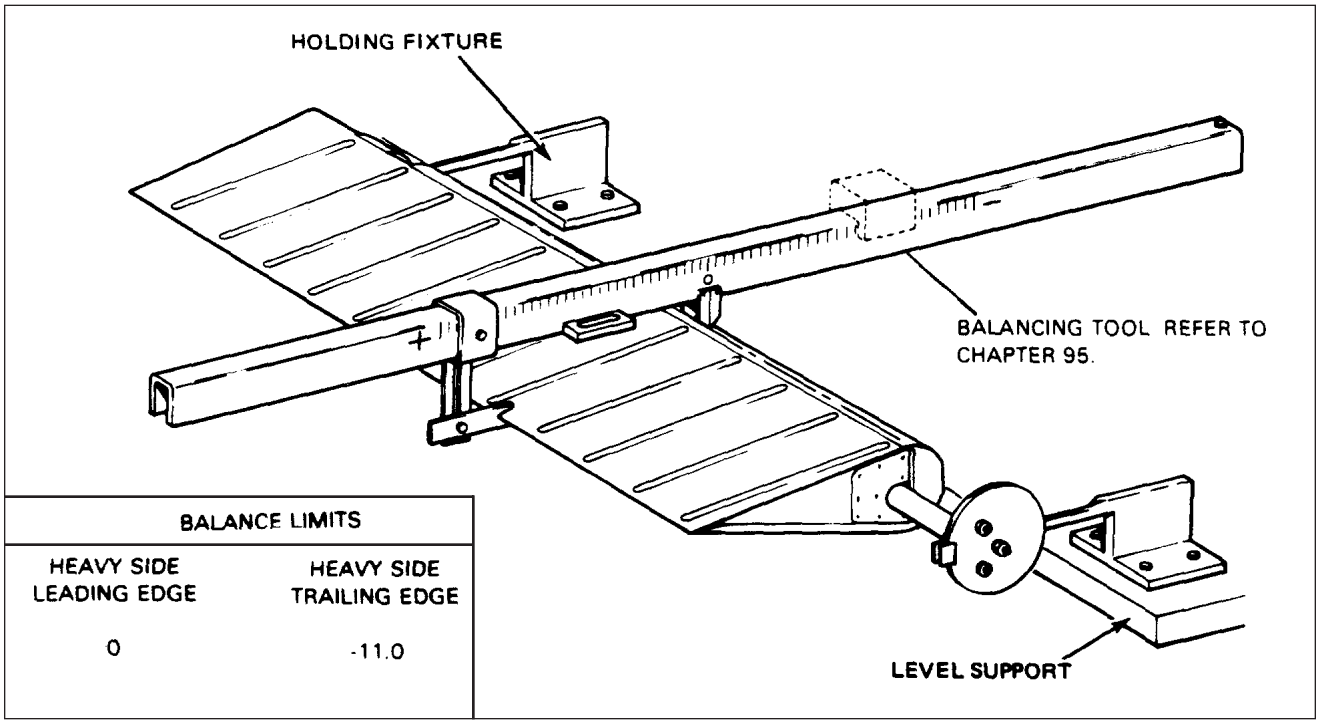

BALANCE LIMITS	
HEAVY SIDE LEADING EDGE	HEAVY SIDE TRAILING EDGE
0	-11.0

Rudder Balancing
Figure 3

BALANCING RUDDER (Refer to Figure 3)

To balance rudder, assembly must be complete including sector assembly. Place complete assembly horizontally on knife edge support in a draft-free area in a manner that allows unrestricted movement. Place tool on rudder with beam perpendicular to hinge centerline. Calibrate tool as described in Balancing Equipment. Read scale when bubble level has been centered by adjustment of moveable weight and determine static balance limit. If static balance is not within limits given proceed as follows:

1. Nose Heavy: This condition is highly improbable; recheck calculations and measurements.
2. Nose Light: In this case, the mass balance weight is too light or the rudder is too heavy because of painting; it will be necessary to strip the paint and repaint. If the rudder is too heavy as a result of repairs, the repair must be removed and the damaged parts replaced.

– END –

CHAPTER

56

WINDOWS

CHAPTER 56 - WINDOWS

TABLE OF CONTENTS/EFFECTIVITY

CHAPTER SECTION	SUBJECT	GRID NO.	EFFECTIVITY
56-10-00	FLIGHT COMPARTMENT	3I18	July 1, 1993
56-10-00	Windshield	3I18	July 1, 1993
56-10-00	Removal of Windshield	3I18	July 1, 1993
56-10-00	Installation of Windshield	3I18	July 1, 1993
56-20-00	CABIN	3I20	July 1, 1993
56-20-00	Side Windows	3I20	July 1, 1993
56-20-00	Removal of Side Windows	3I20	July 1, 1993
56-20-00	Installation of Side Windows	3I20	July 1, 1993

FLIGHT COMPARTMENT

WINDSHIELD

REMOVAL OF WINDSHIELD

1. Remove collar molding from around bottom of windshield and trim strip from between windshield halves by removing attaching screws.
2. Remove windshield by raising lower portion of windshield and carefully pulling it out and downward to release top and side edges.

– NOTE –

A damaged windshield should be saved since it can be used as a pattern for drilling required holes in new windshield.

3. Clean old tape and sealer from windshield channels, strips and divider post.

INSTALLATION OF WINDSHIELD (Refer to Figure 1)

1. Be certain that new windshield outside contours are the same as that of old windshield. It may be found that it is necessary to cut or grind the new windshield to acquire proper dimension.
2. Apply black vinyl tape around outer edges of entire windshield.
3. Apply PMS-K0003 Type II vinyl foam tape number 560 or equivalent over plastic tape, completely around edges of windshield.
4. Apply (PRC) PR307 sealant or equivalent under edge of moldings and trim strips.
5. Place windshield in position for installation and slide windshield aft and up into place, using caution not to dislocate tape around edges. Allow clearance between the two windshields at divider post for expansion.
6. Lay sealant at bottom and center (inboard) of windshield in hollow between outside edge and channel.
7. Lay a small amount of sealant under center trim strip, install and secure.
8. Lay black vinyl tape on underside of collar molding, install and secure.
9. Seal with sealant any area around windshield that may allow water to penetrate past windshield.
10. Remove excess exposed sealer and tape.

FLIGHT COMPARTMENT (Cont.)

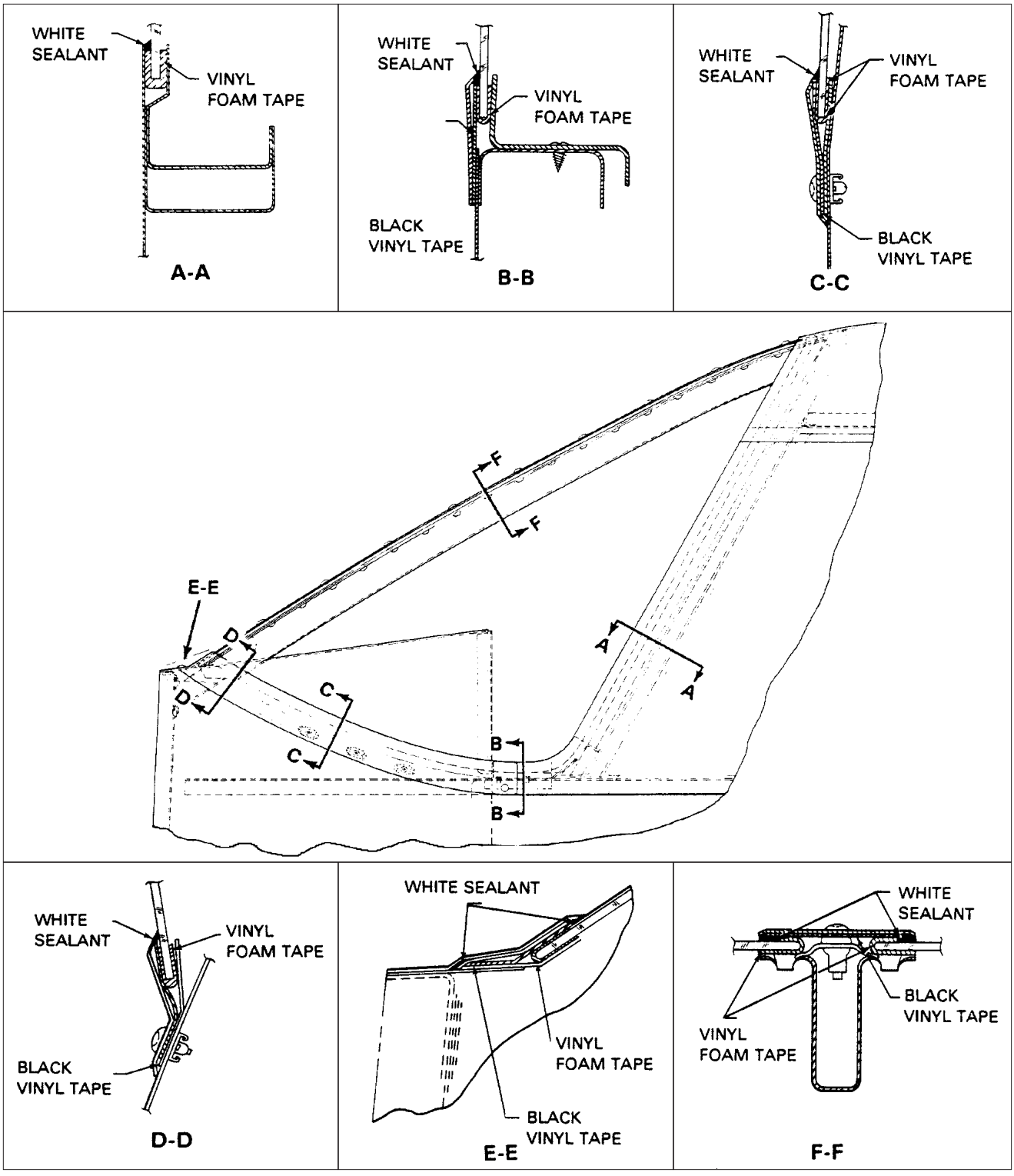

Typical Windshield Installation
Figure 1

CABIN

SIDE WINDOWS

REMOVAL OF SIDE WINDOWS

The PA-32R-301 SP, PA-32R-301T SP, and PA-32R-301 II HP model airplanes are equipped with single pane side windows. For removal of windows, the following instructions may be used:

1. Single Pane
   a. Remove retainer molding from around window by removing attachment screws. Figure 2. Typical Single Pane Side Window Installation.
   b. Carefully remove the window from the frame.

– NOTE –

A damaged window should be saved to provide a pattern for shaping the new window.

   c. Remove excess tape and sealer from the window frame and molding.

INSTALLATION OF SIDE WINDOWS

1. For all single pane side windows except cabin door windows. (Refer to Figure 2.):
   a. Cut or grind the new window to the same dimension as the window removed.
   b. Apply PMS-K0003 Type II vinyl foam tape or equivalent on both side of the window around the outer edges.
   c. Apply (PRC) PR 307 Sealant or equivalent completely around the outer surface of the windows at all attachment flanges.
   d. Insert the window in the frame and install the retainer moldings.
   e. Secure the molding with attachment screws and tighten until the vinyl foam tape is 25% compressed by the retainers.
   f. Remove the excess exposed sealer and tape.
2. Cabin Door Windows Only.
   a. Apply sealant, with protective paper in place, to edges of windows.
   b. Remove protective paper just before installing window.
   c. Insert window in frame and apply hand pressure to perimeter of window by using a narrow rubber roller.
   d. Complete installation of window retention parts and hardware.

CABIN (Cont.)

INSTALLATION OF SIDE WINDOWS (Cont.)

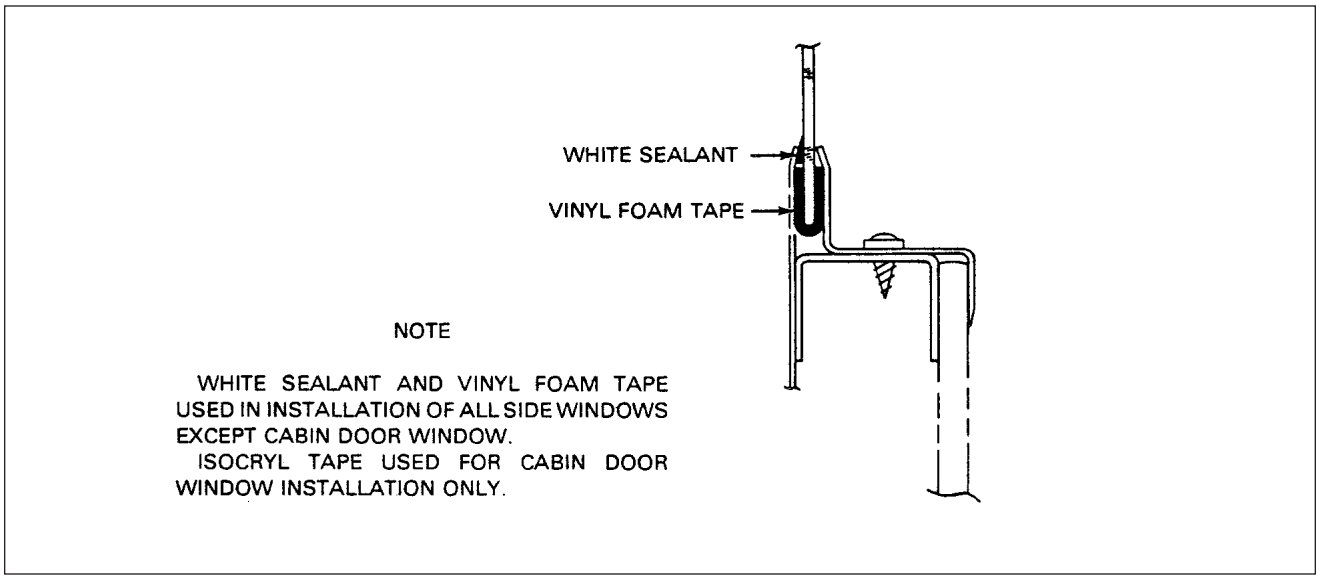

Typical Single Pane Side Window Installation
Figure 2

– END –

INTENTIONALLY LEFT BLANK

INTENTIONALLY LEFT BLANK

CHAPTER

57

WINGS

CHAPTER 57 - WINGS

TABLE OF CONTENTS/EFFECTIVITY

CHAPTER SECTION	SUBJECT	GRID NO.	EFFECTIVITY
57-00-00	GENERAL	3J2	July 1, 1993
57-00-00	Description	3J2	July 1, 1993
57-20-00	AUXILIARY STRUCTURE	3J4	July 1, 1993
57-20-00	Wing Tip	3J4	July 1, 1993
57-20-00	Removal of Wing Tip	3J4	July 1, 1993
57-20-00	Installation of Wing Tip	3J4	July 1, 1993
57-20-00	Repair of Wing Tip	3J4	July 1, 1993
57-40-00	ATTACH FITTINGS	3J6	July 1, 1993
57-40-00	Wing to Fuselage Attach Fittings	3J6	July 1, 1993
57-40-00	Removal of Wing	3J6	July 1, 1993
57-40-00	Installation of Wing	3J9	July 1, 1993
57-50-00	FLIGHT SURFACES	3J12	July 1, 1993
57-50-00	Ailreon	3J12	July 1, 1993
57-50-00	Removal of Aileron	3J14	July 1, 1993
57-50-00	Installation of Aileron	3J14	July 1, 1993
57-50-00	Checking Aileron Free Play	3J14	July 1, 1993
57-50-00	Balancing Aileron	3J14	July 1, 1993
57-50-00	Wing Flap	3J15	July 1, 1993
57-50-00	Removal of Flap	3J15	July 1, 1993
57-50-00	Installation of Flap	3J15	July 1, 1993

GENERAL

This chapter explains the removal and installation procedures for the wings and related components installed on this aircraft.

DESCRIPTION.

Each wing panel is an all metal, full cantilever, semi-monocoque type structure with removable tips and and access panels. Attached to each wing are the aileron, flap, main landing gear and fuel tank. The wings are attached to each side of the fuselage by inserting the butt ends of the main spars into a spar box carry through. The spar box is an integral part of the fuselage structure which provides, in effect, a continuous main spar with splices at each side of the fuselage. There are also fore and aft attachments at the front and rear spars.

– NOTE –

The major subassemblies of the wing may be removed individually or the wing may be removed as a unit. To remove a wing, a fuselage and wing supporting cradle is required.

– END –

INTENTIONALLY LEFT BLANK

AXUILIARY STRUCTURE

WING TIP

REMOVAL OF WING TIP

1. Remove the screws holding the wing tip to the wing, being careful not to damage the wing or wing tip.
2. Pull off the wing tip far enough to disconnect the position and strobe light wire assembly. The ground lead may be disconnected at the point of connection on the wing rib, and the positive lead may be disconnected at the wire terminal or unscrewed from the light assembly.
3. Inspect the wing tip to ascertain that it is free of cracks, severe nicks and minor damage. If repair is required, refer to Chapter 51.

INSTALLATION OF WING TIP

1. Place the wing tip in a position that the navigation and strobe light leads may be connected. Connect the ground lead to the wing rib by use of a screw and nut, and the positive lead to the position light by connecting the wire terminals of screwing the connectors together. Insulate the wire terminals and be certain that the ground lead is free of dirt and film to insure a good connection.
2. Insert the wing tip into position and install the screws round the tip. Use caution to refrain from damaging the wing tip or wing. Check operation of the lights.

REPAIR OF WING TIP

Badly damaged thermoplastic tips should be replaced. (Refer to Chapter 51.)

– END –

INTENTIONALLY LEFT BLANK

ATTACH FITTINGS.

WING TO FUSELAGE ATTACH FITTINGS.

REMOVAL OF WING. (Refer to Figure 1)

1. Close the fuel valve and drain the fuel from the wing to be removed. (Refer to Draining Fuel System, Chapter 12.)
2. Drain the brake line and reservoir. (Refer to Draining Brake System, Chapter 12.)
3. Remove the access plate at the wing butt rib and wing inspection panels. (Refer to Access Plates and Panels, Chapter 6.)
4. Remove the front and back seats from the airplane.
5. Expose the spar box and remove the cockpit side trim panel assembly that corresponds with the wing being removed.
6. Place the airplane on jacks. (Refer to Jacking, Chapter 7.)

– NOTE –

To help facilitate reinstallation of control cables, and fuel and hydraulic lines, mark cable and line ends in some identifying manner and attach a line where applicable to cables before drawing them through the fuselage or wing.

7. Disconnect the aileron balance and control cables at the turnbuckles that are located within the fuselage aft of the spar.
8. If the left wing is being removed, remove the cotter pin from the pulley bracket assembly to allow the left aileron balance cable end to pass between the pulley and bracket.
9. Disconnect the flap from the torque tube by extending the flap to its fullest degree, and removing the bolt and bushing from the bearing at the aft end of the control rod.
10. Disconnect the fuel line at the fitting located forward of the spar at the wing butt line.

– CAUTION –

To prevent damage or contamination of fuel, hydraulic and miscellaneous lines, place a protective cover over the line fittings and ends.

11. Remove the clamps necessary to release the electrical harness assembly. Disconnect the leads from the terminal strip assembly by removing the cover, and appropriate nuts and washers.
12. With the appropriate trim panel removed, disconnect the hydraulic brake line at the fitting located within the cockpit at the leading edge of the wing.
13. If the left wing is being removed, it will be necessary to disconnect the pitot static tube at the elbows located within the cockpit at the wing butt line.
14. Arrange a suitable fuselage cradle and supports for both wings.
15. Remove the jacks.
16. Remove the front and rear spar nuts, washers and bolts.
17. Remove the eighteen main spar bolts.
18. Slowly remove the wing being certain that all electrical leads, cables and lines are disconnected.

ATTACH FITTINGS (Cont.)

	BOLT LEGEND		WASHER	
POSITION	BOLT	NUT	UNDER HEAD	UNDER NUT
A1	NAS464P6LA17	MS21042-6	AN960-616	AN960-616 (2 Max)
A2	NAS464P6LA16	MS21042-6	AN960-616	AN960-616 (2 Max)
A3	NAS464P6LA16	MS21042-6	AN960-616	AN960-616 (2 Max)
A4	NAS464P6LA16	MS21042-6	AN960-616	AN960-616 (2 Max)
A5	NAS464P6LA16	MS21042-6	AN960-616	AN960-616 (2 Max)
B1	NAS464P6LA15	H19300-6	AN960-616L	K19301-6
B2	NAS464P6LA14	H19300-6	AN960-616	K19301-6
B3	NAS464P6LA14	H19300-6	AN960-616	K19301-6
B4	NAS464P6LA14	H19300-6	AN960-616	K19301-6
B5	NAS464P6LA14	H19300-6	AN960-616	K19301-6
C1	NAS464P5LA20	MS21042-5	AN960-516L	AN960-516 (2 Max)
C2	NAS464P6LA20	MS21042-6	AN960-616L	AN960-616 (2 Max)
C3	NAS464P6LA20	MS21042-6	AN960-616L	AN960-616 (2 Max)
C4	NAS464P6LA20	MS21042-6	AN960-616L	AN960-616 (2 Max)
C5	NAS464P6LA21	MS21042-6	AN960-616L	96352-3
C6	NAS464P5LA21	MS21042-5	AN960-516L	96352-2
D1	NAS464P5LA20	MS21042-5	AN960-516L	AN960-516 (2 Max)
D2	NAS464P6LA20	MS21042-6	AN960-616L	AN960-616 (2 Max)
D3	NAS464P6LA20	MS21042-6	AN960-616L	AN960-616 (2 Max)
D4	NAS464P6LA20	MS21042-6	AN960-616L	AN960-616 (2 Max)
D5	NAS464P6LA21	MS21042-6	AN960-61 6L	96352-3
D6	NAS464P5LA21	MS21042-5	AN960-516L	96352-2

TOROUE BOLT HEADS ON UPPER SPAR CAP & NUT ON LOWER SPAR CAP
AS FOLLOWS: 5/16 INCH BOLT = 205-225 IN-LBS
3/8 INCH BOLT = 360-390 IN-LBS.

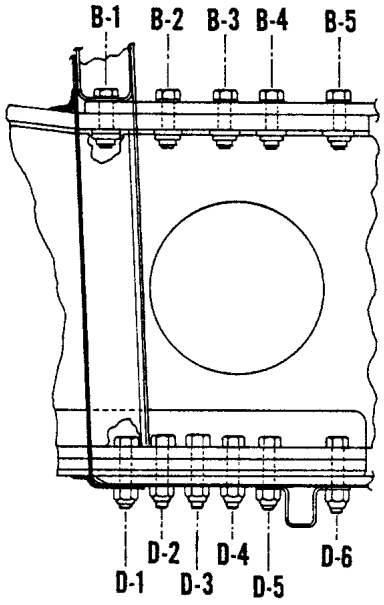

SKETCH C

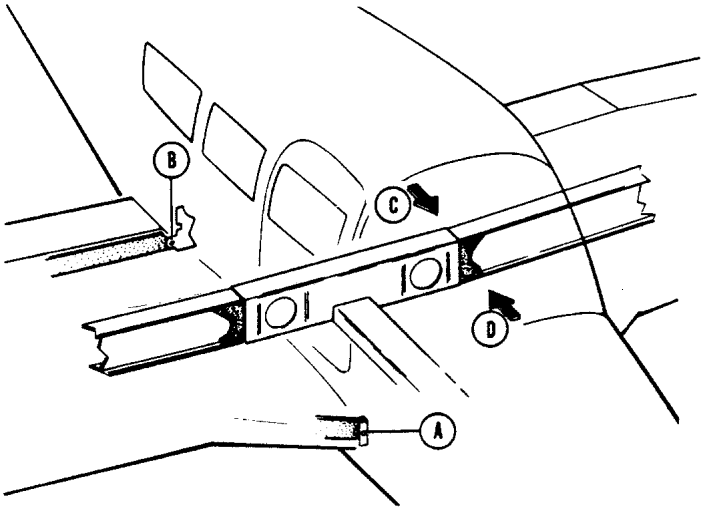

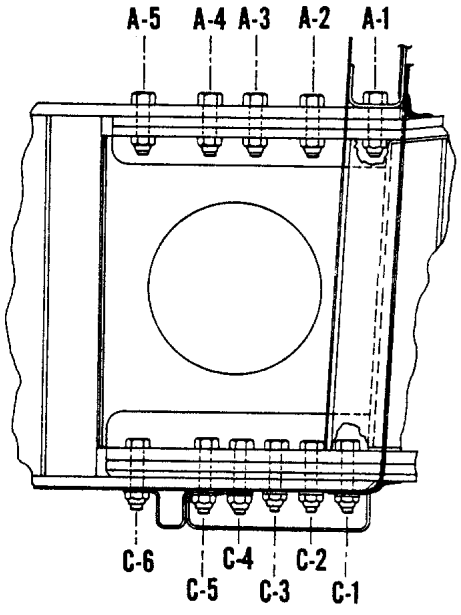

SKETCH D

Wing Installation
Figure 1 (Sheet 1 of 2)

ATTACH FITTINGS (Cont.)

REAR SPAR ATTACHMENT

NEW SERVICE WINGS ARE NOT DRILLED FOR THE REAR SPAR ATTACHMENT BOLT. THIS WILL NECESSITATE DRILLING A .3745-.3765 HOLE IN THE REAR SPAR ATTACHMENT POINT.

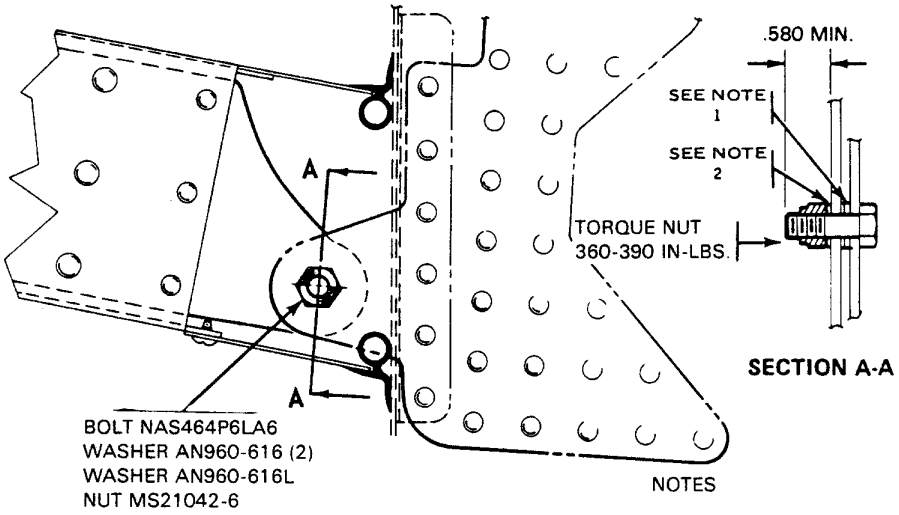

NOTES

1. MAXIMUM NUMBER OF WASHERS ALLOWED BETWEEN FORWARD FACE OF WING FITTING AND AFT FACE OF FUSELAGE FITTING IS ONE AN960-616L & TWO AN960-616. (ALL THREE WASHERS ALWAYS REQUIRED WITH ONLY THE AN960-616L WASHER ALLOWED UNDER BOLT HEAD).
2. AFTER REQUIRED WASHERS ARE INSERTED BETWEEN FITTINGS, INSTALL BOLT AND CHECK TO INSURE THAT NO THREADS ARE BEARING ON THE FORWARD FITTING PRIOR TO INSTALLING THE NUT. USE SHORTEST BOLT WHICH WILL LEAVE 0.580 MINIMUM FROM FITTING TO END OF BOLT.

SKETCH B

FORWARD SPAR ATTACHMENT

NAS1104-17
MS21045-4
WASHER AN960-416L (UNDER HEAD)
WASHER AN960-416 (UNDER NUT)

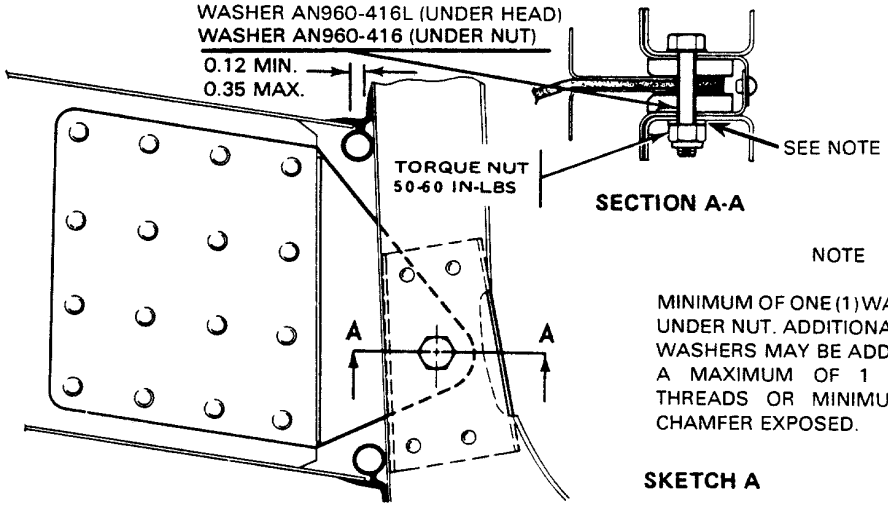

NOTE

MINIMUM OF ONE (1) WASHER REQ'D. UNDER NUT. ADDITIONAL AN960-616 WASHERS MAY BE ADDED TO LEAVE A MAXIMUM OF 1 1/2 VISIBLE THREADS OR MINIMUM OF BOLT CHAMFER EXPOSED.

SKETCH A

Wing Installation
Figure 1 (Sheet 1 of 2)

ATTACH FITTINGS (Cont.)

INSTALLATION OF WING. (Refer to Figure 1.)

1. Ascertain that the fuselage is positioned solidly on a support cradle.
2. Place the wing in position for installation, with the spar end a few inches from the side of the fuselage and set on trestles.
3. Prepare the various lines, control cables, etc., for inserting into the wing or fuselage when the wing is slid into place.
4. Slide the wing into position on the fuselage.
5. Install the eighteen main spar bolts in accordance with the bolt legend.

– NOTE –

When replacing a wing assembly, ascertain the wing butt clearance is maintained (Refer to Sketch A, Figure 1.)

6. Install the bolt, washers and nut that attaches the front spar with the fuselage fitting. A minimum of one washer under the nut and one washer under the head is required. Then add washers as needed to leave a maximum of one and one-half threads visible or a minimum of the bolt chamfer exposed.
7. Insert the number of washers required between the forward face of the wing fitting and aft face of the fuselage fitting of the rear spar attachment. The maximum number of washers allowed is one AN960-616L and two AN960-616. It is also acceptable to have the faces of the fittings against each other. After the required washers are inserted between the plates, install the bolt and check to insure that no threads are bearing on the forward plate prior to installing the nut. Use the shortest bolt which will leave 0.580 of an inch minimum from the fitting to the end of the bolt.
8. Torque the eighteen main spar bolt nuts or bolt heads to the required torque. Be certain that the bolts, nuts and washers are installed in accordance with the bolt legend. The forward spar attachment bolt should be torqued in accordance with the chart of recommended torque requirements given in Chapter 91. Torque the rear spar attachment bolt as specified in Figure 1.
9. Install the wing jacks and the tail support to the tail skid with approximately 250 pounds of ballast on the base of the tail support. Remove the fuselage cradle and wing supports.
10. If the left wing was removed, it is necessary that the pitot static tube to be connected at the elbows located within the cockpit at the wing butt line. Replace or install clamps where found necessary. In the event that a heated pitot is installed, the plus lead must be connected at the fuselage.
11. Connect the hydraulic brake line onto the fitting located within the cockpit at the leading edge of the wing.
12. Connect the leads to the appropriate posts on the terminal strip and install the washers and nuts. (For assistance in connecting the electrical lead, refer to the Electrical Schematics in Chapter 91.) Place the clamps along the electrical harness to secure it in position and install the terminal strip dust cover.
13. Remove the cap from the fuel line and connect it at the fitting located forward of the spar at the wing butt line.
14. Connect the aileron balance and control cables at the turnbuckles that are located within the fuselage aft of the spar. After the left balance cable has been inserted through the bracket assembly and connected, install a cotter pin cable guard into the hole that is provided in the bracket assembly.
15. Connect the flap by placing the flap handle in the full flap position, place the bushing on the outside of the rod end bearing and insert and tighten bolt.
16. Check the rigging and control cable tension of the ailerons and flaps. (Refer to Rigging and Adjustment of Ailerons, and Rigging and Adjustment of Flaps, Chapter 27.)

ATTACH FITTINGS (Cont.)

INSTALLATION OF WING. (Refer to Figure 1.) (Cont.)

17. Service and refill the brake system with hydraulic fluid in accordance with Servicing Brake System, Chapter 12. Bleed the system as given in Chapter 32 and check for fluid leaks.
18. Service and fill the fuel system in accordance with Servicing Fuel System, Chapter 12. Open the fuel valve and check for leaks and flow.
19. Check the operation of all electrical equipment, and pitot system.
20. Remove the airplane from the jacks.
21. Install the cockpit trim panel assembly, spar box carpet, the front and back seats, and wing butt rubber molding.
22. Replace all the access plates and panels on the wing involved. board) to insure maximum end play of 0.035 is not exceeded.

– END –

INTENTIONALLY LEFT BLANK

FLIGHT SURFACES

AILERON

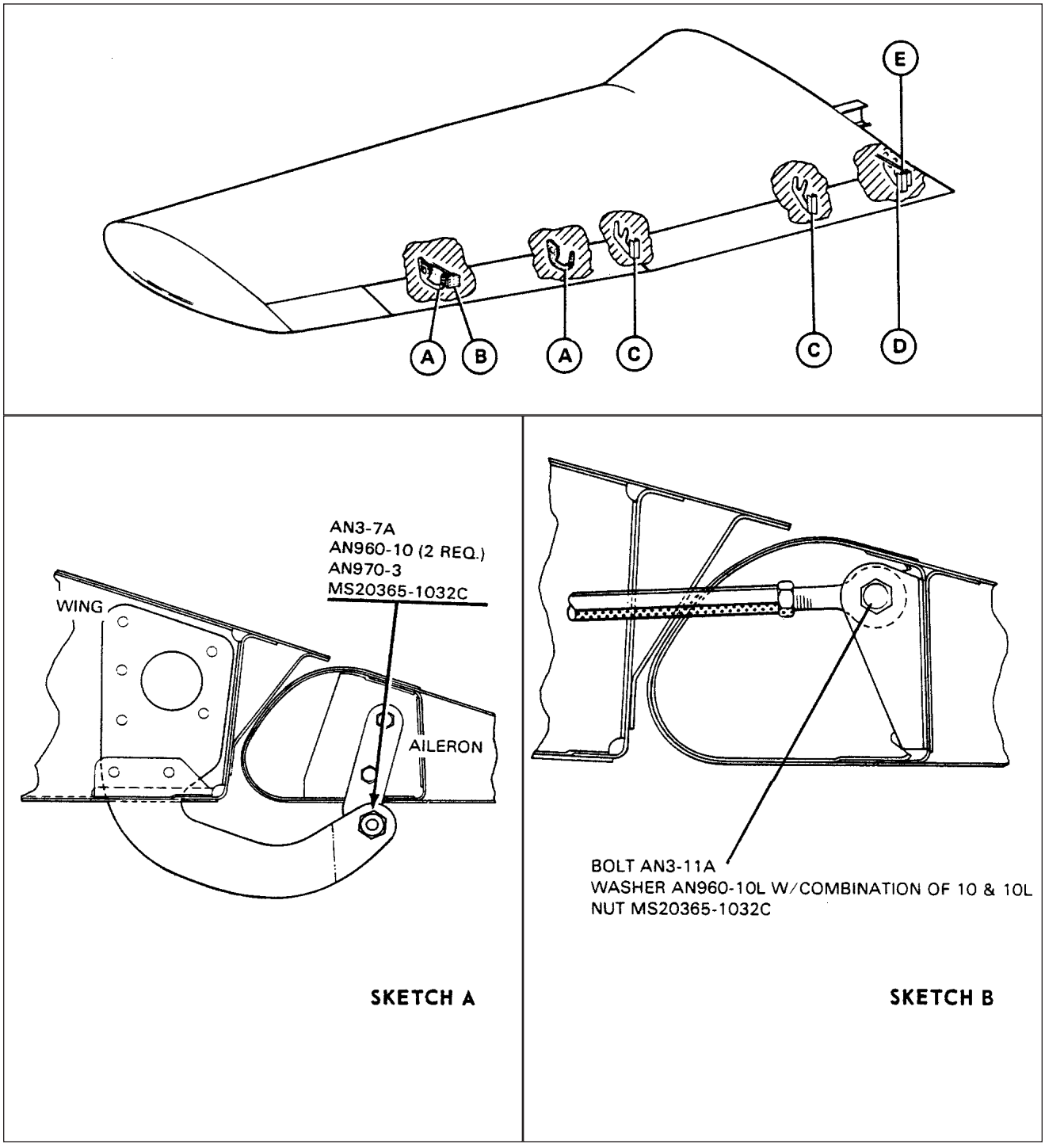

Aileron and Flap Installation
Figure 2 (Sheet 1 of 2)

FLIGHT SURFACES (Cont.)

AILERON (Cont.)

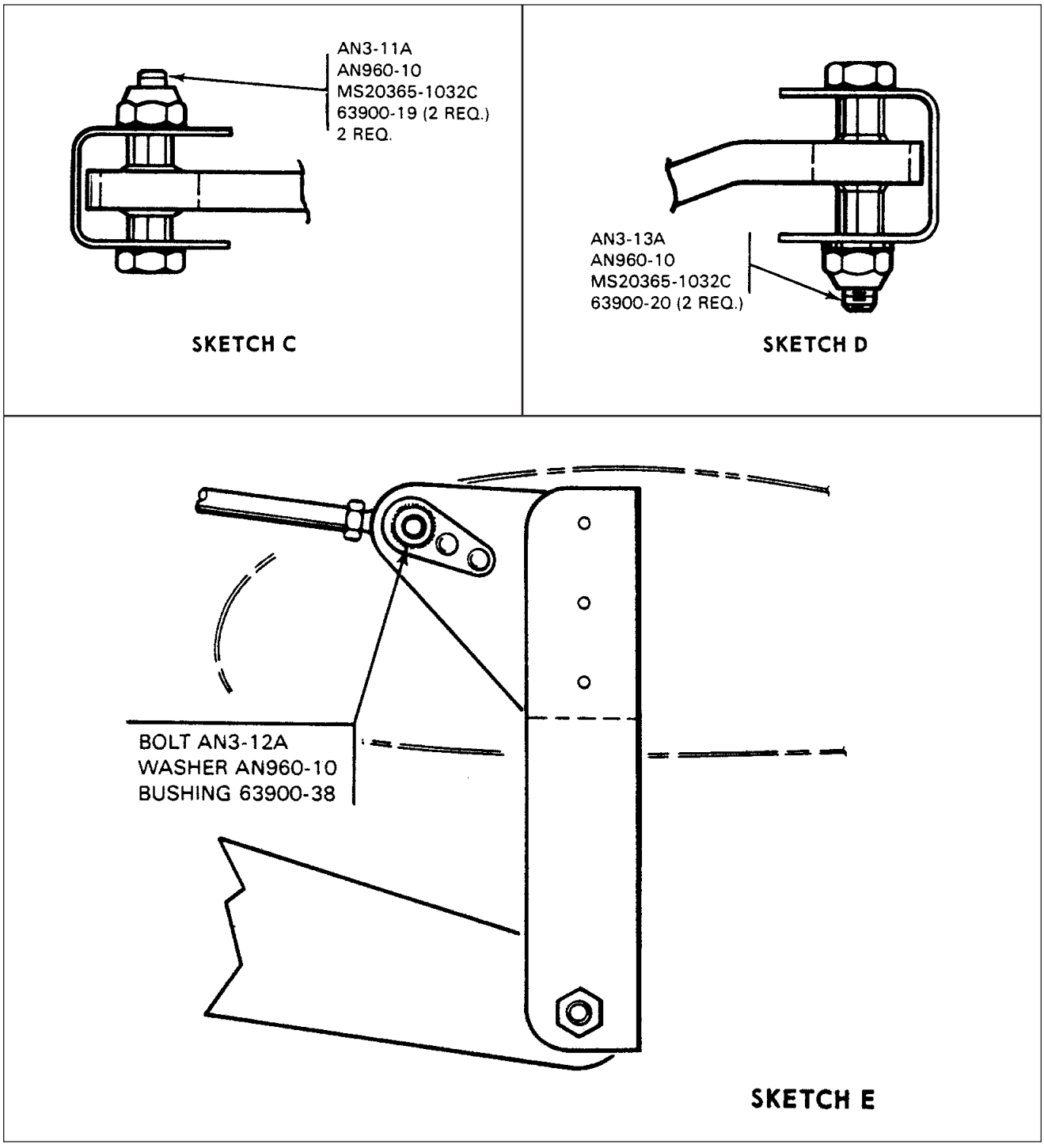

Aileron and Flap Installation (cont.)
Figure 2 (Sheet 2 of 2)

FLIGHT SURFACES (Cont.)

AILERON (Cont.)

REMOVAL OF AILERON. (Refer to Figure 2.)

1. Disconnect the aileron control rod at the aileron attachment point by removing the nut, washers and bolt from the rod end bearing. To simplify installation note location of washers removed.
2. Remove the attaching nuts, bolts and washers from the hinges at the leading edge of the aileron, and remove the aileron.

INSTALLATION OF AILERON. (Refer to Figure 2.)

1. Move the aileron into place and install attaching bolts, washers and nuts. Ascertain that the aileron is free to move with no interference.
2. Attach the aileron control rod with bolts, washers and nut, dividing the washers so that the aileron is free to rotate from stop to stop without the control rod binding or rubbing on the opening in the aft spar. Be certain that the rod end bearing has no side play when tightening the bolt and that the rod does not contact the side of the bracket.
3. Actuate the aileron controls to insure freedom of movement.

CHECKING AILERON FREE PLAY.

The following checks are recommended before balancing to ascertain the amount of "free play" in the aileron:

Set the aileron in its neutral position and secure. Obtain a straightedge long enough to extend from the ground up to a few inches above the aileron trailing edge. Place the straightedge next to the aileron trailing edge and gently move the aileron up and down, mark the limit of travel (free play) on the straightedge. The overall travel (free play) must not exceed 0.24 of an inch. Should free play exceed the limit stated make necessary repairs as required to eliminate free play. Grasp the aileron and move it spanwise (inboard/outboard) to insure maximum end play of 0.035 of an inch is not exceeded.

BALANCING AILERON (Refer to Figure 3)

– WARNING –

All control surfaces that have been replaced repainted, or repaired, must be rebalanced according to the procedures in this manual.

Position the aileron on the balancing fixture in a draft free area and in a manner which allows unrestricted movement of the aileron. Place the tool on the aileron, avoiding rivets, and keep the beam perpendicular to the hinge centerline. Read the scale when the bubble level has been centered by adjustment of the movable weight and determine the static balance. If the static balance is not within the limits specified in Figure 3, proceed as follows:

1. Leading edge heavy: This condition is highly improbable; recheck measurements and calculations.
2. Trailing edge heavy: There are no provisions for adding weight to balance weight to counteract a trailing edge heavy condition. Therefore, it will be necessary to determine the exact cause of the unbalance. If the aileron is too heavy because of painting over old paint, it will be necessary to strip all paint from the aileron and repaint. If the aileron is too heavy resulting from repair to the skin or ribs, it will be necessary to replace all damaged parts and recheck the balance.

FLIGHT SURFACES (Cont.)

BALANCING AILERON (Refer to Figure 3) (Cont.)

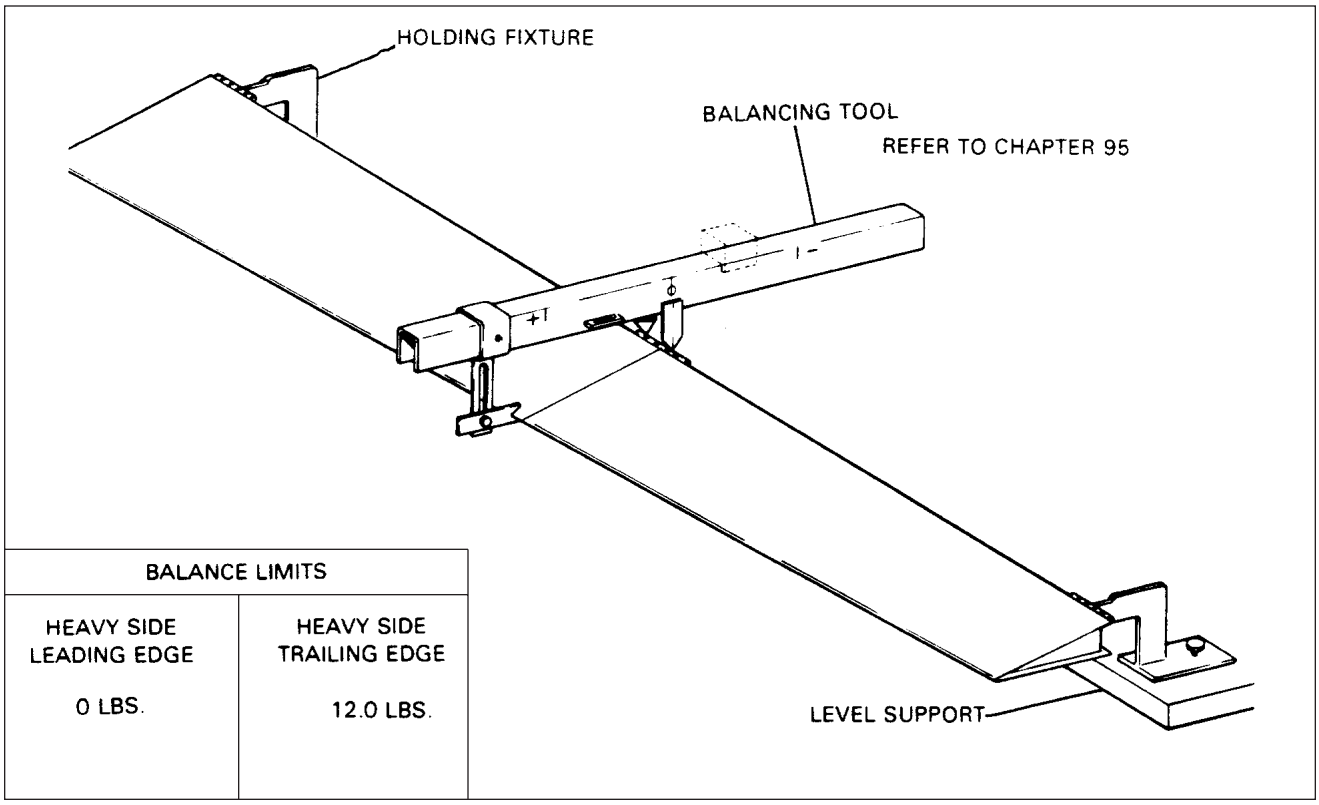

BALANCE LIMITS	
HEAVY SIDE LEADING EDGE	HEAVY SIDE TRAILING EDGE
0 LBS.	12.0 LBS.

Aileron Balance Configuration
Figure 3

WING FLAP

REMOVAL OF WING FLAP (Refer to Figure 2)

1. Extend the flaps to their fullest degree and remove the bolt and bushing from the rod end bearing.
2. Remove the nuts, washers, bushing and hinge bolts that hold the flap to the wing assembly.
3. Pull the flap straight back off the wing.

INSTALLATION OF WING FLAP (Refer to Figure 2)

1. Replace the wing flap by placing the flap onto its proper position and inserting the hinge bolts, bushings, washers and nuts.
2. With the flap control in the full flap position, place the bushing on the outboard side of the rod end bearing and insert and tighten the bolt.
3. Operate the flap several times to be certain it is operating freely. (Refer to Chapter 27 for Flap Rigging and Adjustment.

INTENTIONALLY LEFT BLANK

INTENTIONALLY LEFT BLANK

CHAPTER

61

PROPELLER

CHAPTER 61 - PROPELLER

TABLE OF CONTENTS/EFFECTIVITY

CHAPTER SECTION	SUBJECT	GRID NO.	EFFECTIVITY
61-10-00	PROPELLER ASSEMBLY	3J20	July 1, 1993
61-10-00	Propeller Maintenance	3J20	July 1, 1993
61-10-00	Removal of Propeller	3J20	July 1, 1993
61-10-00	Propeller Specifications		
61-10-00	PA-32R-301 SP	3J24	July 1, 1993
61-10-00	PA-32R-301 II HP	3J24	July 1, 1993
61-10-00	PA-32R-301T SP	3K1	July 1, 1993
61-10-00	Cleaning, Inspection and Repair of Propeller	3K1	July 1, 1993
61-10-00	Installing Propeller (PA-32R-301 SP)	3K2	July 1, 1993
61-10-00	Installing Propeller (PA-32R-301 II HP	3K2	July 1, 1993
61-10-00	Installing Propeller (PA-32R-301T)	3K3	July 1, 1993
61-10-00	Blade Track	3K4	July 1, 1993
61-20-00	CONTROLLING	3K6	July 1, 1993
61-20-00	Propeller Governor	3K6	July 1, 1993
61-20-00	Removal of Propeller Governor	3K6	July 1, 1993
61-20-00	Installation of Propeller Governor	3K6	July 1, 1993
61-20-00	Rigging and Adjustment of Propeller Governor	3K6	July 1, 1993

PROPELLER ASSEMBLY.

This section lists procedures for the removal, cleaning, inspection, repair, and installation of the propeller assembly. Servicing information may be found in Chapter 12 of this manual.

PROPELLER MAINTENANCE.

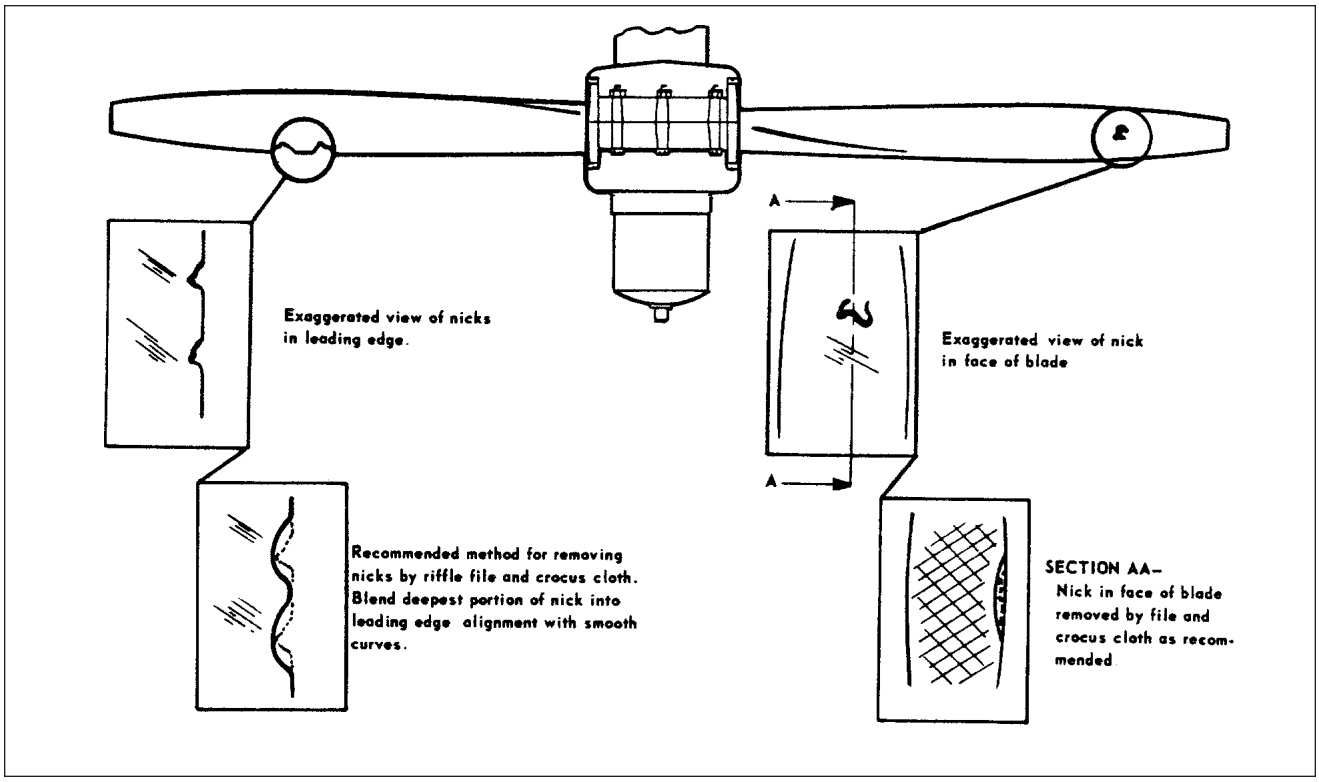

Typical Nicks and Removal Method
Figure 1

REMOVAL OF PROPELLER.

1. Insure that the master and magneto switches are off.
2. Move fuel selector to off position.
3. Place the mixture control in idle cut-off.
4. Note position of each component to facilitate reinstallation.
5. Remove the screws from around the spinner assembly and remove spinner.
6. Remove the safety wire from the six propeller mounting nuts on studs and remove studs.
7. Place a drip pan under the propeller to catch oil spillage, then remove the propeller.

PROPELLER ASSEMBLY (Cont.)

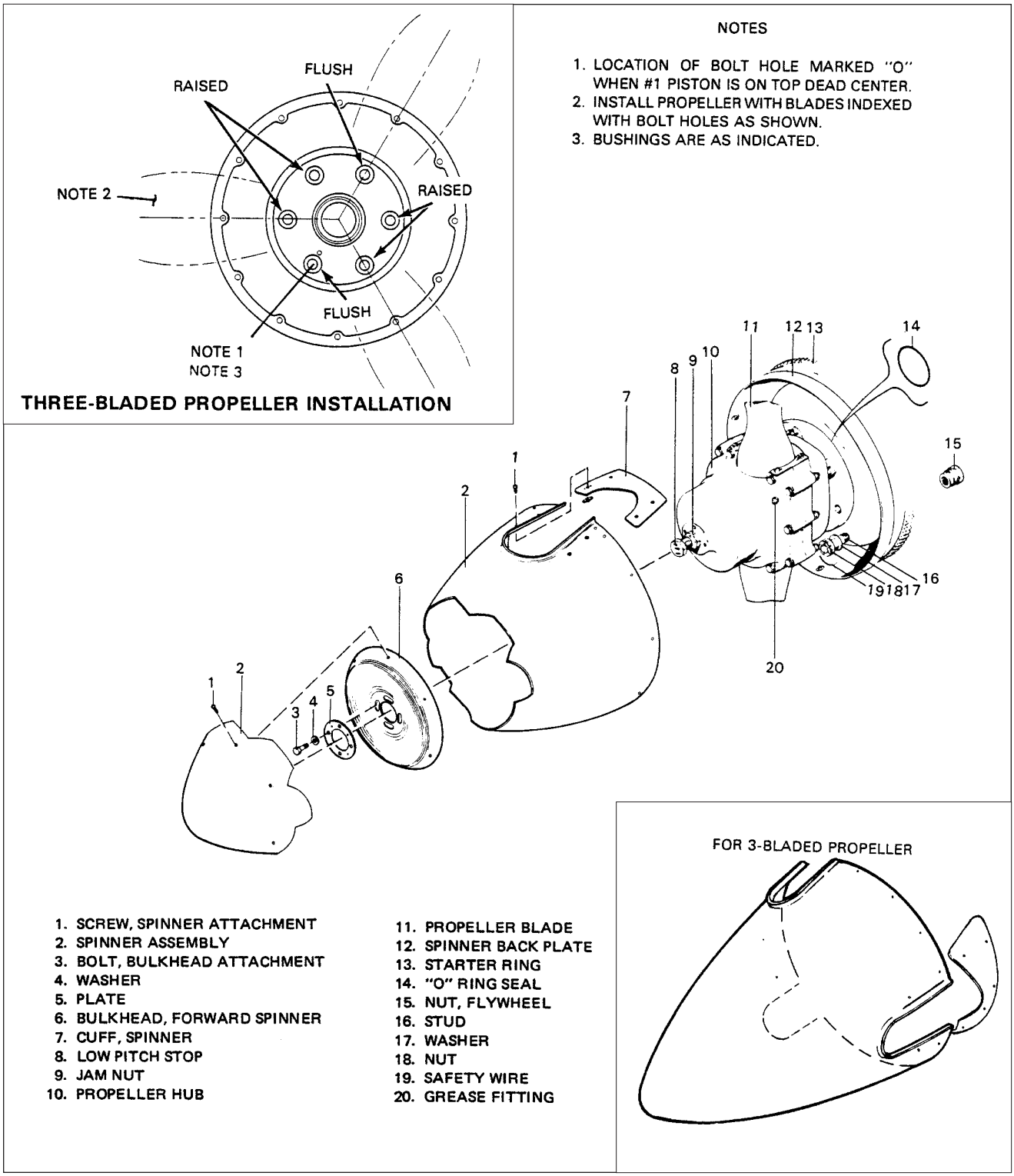

Propeller Installation (PA-32R-301 SP)
Figure 2

PROPELLER ASSEMBLY (Cont.)

NOTES

1. LOCATION OF BOLT HOLE MARKED "0" WHEN #1 PISTON IS ON TOP DEAD CENTER.
2. BUSHINGS ARE AS INDICATED.
3. INSTALL PROPELLER WITH BLADES INDEXED WITH BOLT HOLES AS SHOWN.

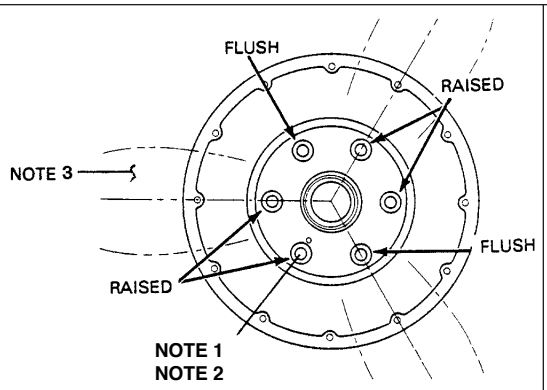

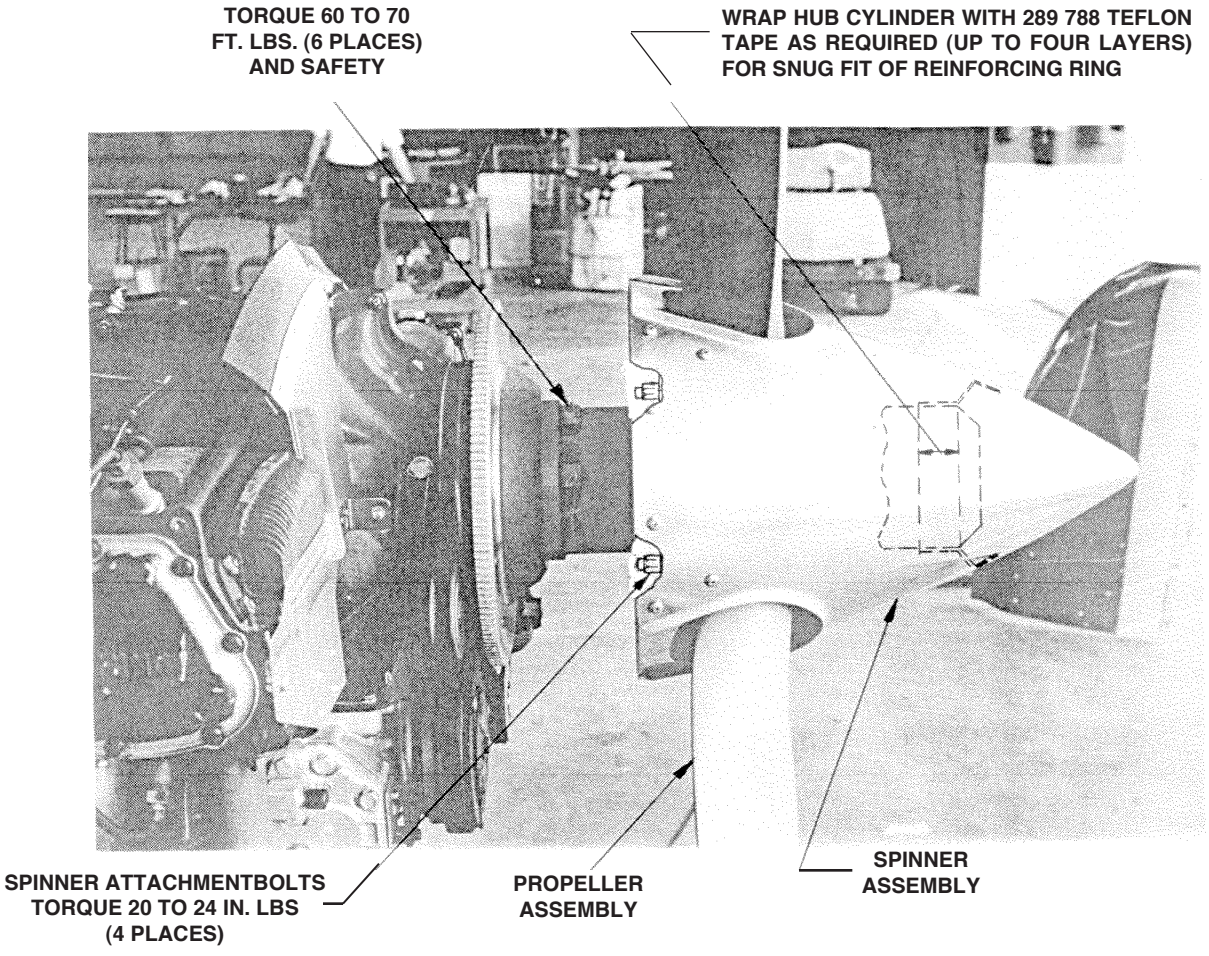

Propeller Installation (PA-32R-301 II HP)
Figure 3

PROPELLER ASSEMBLY (Cont.)

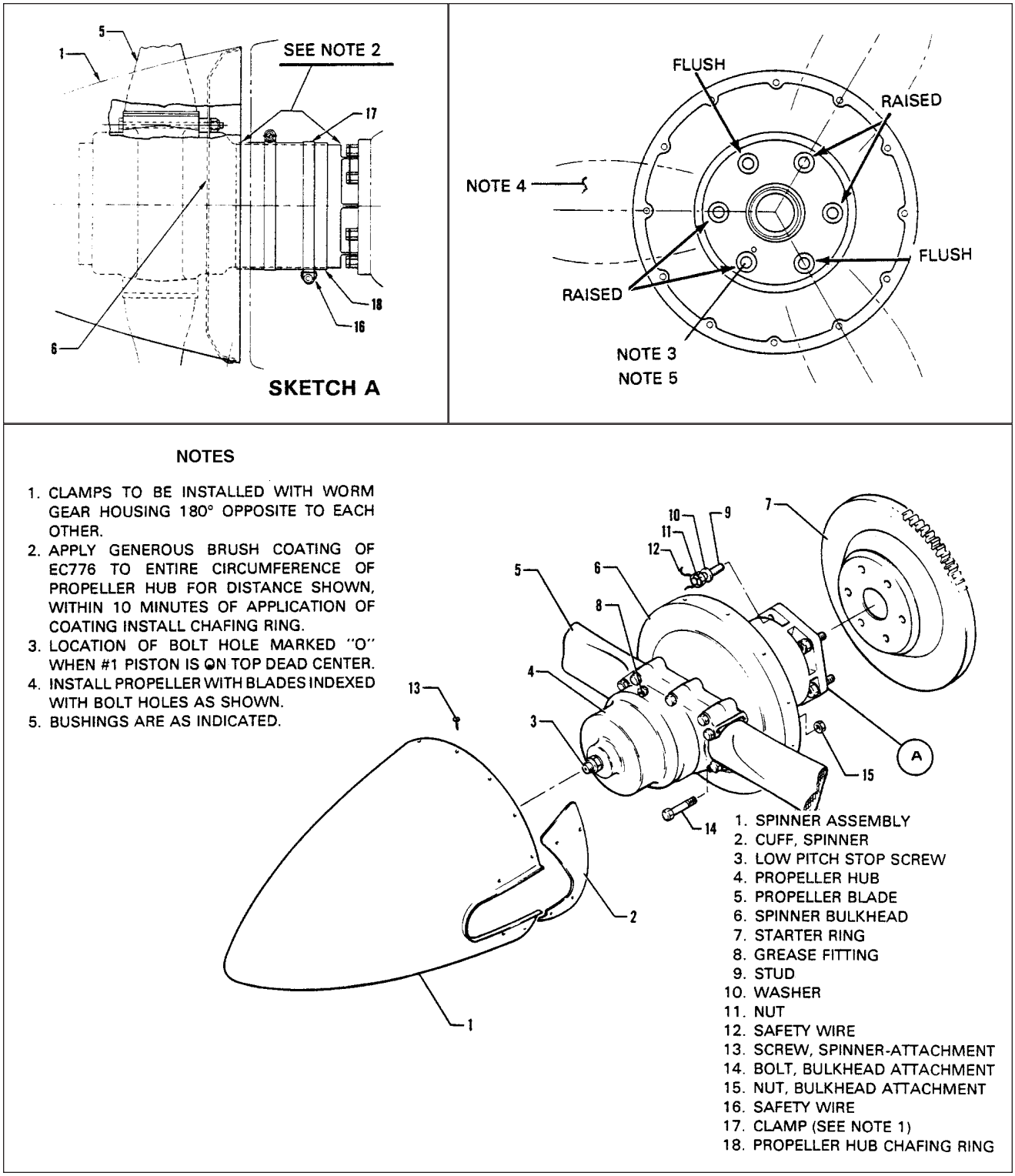

Propeller Installation (PA-32R-301T SP)
Figure 4

PROPELLER ASSEMBLY (Cont.)

CHART 1
PROPELLER SPECIFICATIONS(PA-32R-301 SP)

	2 BLADE	3 BLADE
Hub, Model	HC-C2YK-1	HC-C3YR-1 ( )
Blade, Model	F8475D-4	F/F7663R-0
Diameter	80 in.	78 in.
Blade Angle		
Low Pitch (High RPM)	13.5° ± 0.2°(1)	12.4° ± 0.2°(1)
High Pitch (Low RPM)	34.0° ± 1.0°(1)	32°± 1°(1)
Propeller RPM Setting	Engine Static High RPM	2700 RPM max.
Propeller Torque Limits	Description	Required Torque (Dry)
	Propeller Mounting Nuts	60-70 foot-pounds
	Fwd. Bulkhead Attachment Bolts	30-35 inch-pounds(2)
	Spinner Attachment Screws	20-25 inch-pounds

(1) Measurement taken at 30 inch radius
(2) 2 blade installation only

CHART 2
PROPELLER SPECIFICATIONS(PA-32R-301 II HP)

	3 BLADE
Hub, Model	HC-I3YR-1RF
Blade, Model	F7663DR
Diameter	77 in. minimum 78 in. maximum
Blade Angle	
Low Pitch (High RPM)	12.4° ± 0.2°(1)
High Pitch (Low RPM)	32°± 1°(1)
Propeller RPM Setting	2700 RPM max.
Propeller Torque Limits	
Description	Required Torque (Dry)
Propeller Mounting Nuts	60-70 foot-pounds
Fwd. Bulkhead Attachment Bolts	20-24 inch-pounds
Spinner Attachment Screws	20-22 inch-pounds

(1) Measurement taken at 30 inch radius

PROPELLER ASSEMBLY (Cont.)

CHART 3
PROPELLER SPECIFICATIONS(PA-32R-301T SP)

	2 BLADE	3 BLADE
Hub, Model	HC-E2YR-1	HC-E3YR-1 ( )
Blade, Model	F8477-4	F/F7673DR-0
Diameter	80 in.	78 in.
Blade Angle		
Low Pitch (High RPM)	15.6° ± 0.2°(1)	13.2° ± 0.2°(1)
High Pitch (Low RPM)	34.0° ± 1.0°(1)	34.5° ± 1°(1)
Propeller RPM Setting	Engine Static High RPM	2700 RPM max.
Propeller Torque Limits	Description	Required Torque (Dry)
	Propeller Mounting Nuts	60-70 foot-pounds
	Fwd. Bulkhead Attachment Bolts	20-25 inch-pounds(2)
	Spinner Attachment Screws	20-22 inch-pounds

(1) Measurement taken at 30 inch radius
(2) 2 blade installation only

CLEANING, INSPECTION AND REPAIR OF PROPELLER.

1. Check for oil and grease leaks.
2. Clean the spinner, propeller hub interior and exterior, and blades with a non-corrosive solvent.
3. Inspect the hub parts for cracks.
4. Steel hub parts should not be permitted to rust. Use aluminum paint to touch up if necessary, or replate during overhaul.
5. Check all visible parts for wear and safety.
6. Check blades to determine whether they turn freely on the hub pivot tube. This can be done by rocking the blades back and forth through the slight freedom allowed by the pitch change mechanism. If they appear tight and are properly lubricated, the pitch change mechanism should be removed so that each blade can be checked individually. If blades are tight, the propeller should be disassembled.
7. Inspect blades for damage or cracks. Nicks in leading edges of blades should be filed out and all edges rounded, as cracks sometimes start from such places. Use fine emery cloth for finishing. Refer to Figure 1 for propeller blade care.

PROPELLER ASSEMBLY (Cont.)

INSTALLING PROPELLER. (PA-32R-301 SP) (Refer to Figure 2)

1. Insure master and magneto switches are off.
2. Place fuel selector to off position.
3. Place mixture control in idle cut-off.
4. Observe the starter ring gear to make sure it is mounted properly on the engine crankshaft flange. One of the bushings on the crankshaft is stamped with an “O” mark and it must be inserted in the starter ring gear hole, likewise identified with an “O” mark.
5. Wipe crankshaft and propeller pilot to assure that no chips or foreign matter enter the propeller mechanism.
6. Check interior of propeller hub for proper seating of “O” ring. Wipe inside of hub to remove any traces of dirt. Check to see that “O” ring is covered with grease.
7. Install prop with blades aligned with mounting bolt hole marked “O.”
8. Install rear spinner bulkhead.
9. Slide propeller carefully over pilot, taking care that “O” ring is not damaged.
10. Install the six hexagon head propeller hub mounting bolts and torque per Chart 1.
11. Check propeller blade track as given in Blade Track.
12. Safety the propeller mounting bolts with MS20995-C41 safety wire.
13. Grease blade hub through zerk fittings. Remove one of the two fittings for each propeller blade, alternate the next time. Apply grease through the zerk fitting until fresh grease appears at the fitting hole of the removed fitting. Care should be taken to avoid blowing out hub gaskets.
14. Install the forward spinner bulkhead and torque bolts per Chart 1 Safety bolts with MS20995C41 safety wire.
15. Install spinner and spinner cuff. Torque all attachment screws per Chart 1.

INSTALLING PROPELLER. (PA-32R-301 II HP) (Refer to Figure 3)

1. Insure master and magneto switches are off.
2. Place fuel selector to off position.
3. Place mixture control in idle cut-off.
4. Observe the starter ring gear to make sure it is mounted properly on the engine crankshaft flange. One of the bushings on the crankshaft is stamped with an “O” mark and it must be inserted in the starter ring gear hole, likewise identified with an “O” mark.
5. Wipe crankshaft and propeller pilot to assure that no chips or foreign matter enter the propeller mechanism.
6. Check interior of propeller hub for proper seating of “O” ring. Wipe inside of hub to remove any traces of dirt. Check to see that “O” ring is covered with grease.
7. Install rear spinner bulkhead.
8. Slide propeller carefully over pilot, taking care that “O” ring is not damaged.
9. Install the six hexagon head propeller hub mounting bolts and torque per Chart 2.
10. Check propeller blade track as given in Blade Track.
11. Safety the propeller mounting bolts with MS20995-C41 safety wire.
12. Grease blade hub through zerk fittings. Remove one of the two fittings for each propeller blade, alternate the next time. Apply grease through the zerk fitting until fresh grease appears at the fitting hole of the removed fitting. Care should be taken to avoid blowing out hub gaskets.
13. Install spinner. Torque all attachment screws per Chart 2.

PROPELLER ASSEMBLY (Cont.)

INSTALLING PROPELLER. (PA-32R-301T SP) (Refer to Figure 4)

1. Insure master and magneto switches are off.
2. Place fuel selector to off position.
3. Place mixture control in idle cut-off.
4. Observe the starter ring gear to make sure it is mounted properly on the engine crankshaft flange. One of the bushings on the crankshaft is stamped with an "O" mark and it must be inserted in the starter ring gear hole, likewise identified with an "O" mark.
5. Wipe crankshaft and propeller pilot to assure that no chips or foreign matter enter the propeller mechanism.
6. Check interior of propeller hub for proper seating of "O" ring. Wipe inside of hub to remove any traces of dirt. Check to see that "O" ring is covered with grease.
7. Install rear spinner bulkhead.
8. Apply a generous brush coating of EC776 adhesive to the entire circumference of propeller hub for distance as shown in Figure 61-3, Sketch A.

– NOTE –

EC776 adhesive coating can be purchased through the Minnesota Mining and Manufacturing Company, St. Paul, Minnesota.

– NOTE –

Propeller hub must be clean, dry and free from oil or grease.

9. Install propeller hub chafing ring within ten minutes of application of coating.
10. Install and secure clamps around chafing ring. (Refer to Figure 4, Sketch A for proper installation.)
11. Slide propeller carefully over pilot, taking care that "O" ring is not damaged.
12. Install the six hexagon head propeller hub mounting bolts and torque per Chart 3.
13. Check propeller blade track as given in Blade Track.
14. Safety the propeller mounting bolts with MS20995-C41 safety wire.
15. Grease blade hub through zerk fittings. Remove one of the two fittings for each propeller blade, alternate the next time. Apply grease through the zerk fitting until fresh grease appears at the fitting hole of the removed fitting. Care should be taken to avoid blowing out hub gaskets.
16. Install spinner and spinner cuff. Torque all attachment screws per Chart 3

PROPELLER ASSEMBLY (Cont.)

BLADE TRACK

Blade track is the ability of one blade tip to follow the other while rotating in almost the same plane. Excessive difference in blade track - more than .0625 inch - may be an indication of bent blades or improper propeller installation. Check blade track as follows:

1. With the engine shut down and blades vertical, secure to the aircraft a smooth board just under the tip of the lower blade. Move the tip fore and aft through its full "blade-shake" travel, making small marks with a pencil at each position. Then center the tip between these marks and scribe a line on the board for the full width of the tip.
2. Carefully rotate propeller by hand to bring the opposite (or next) blade down. Center the tip and scribe a pencil line as before and check that lines are not separated more than .0625 inch.
3. Propellers having excess blade track should be removed and inspected for bent blades, or for parts of sheared "O" ring, or foreign particles, which have lodged between hub and crankshaft mounting faces. Bent blades will require repair and overhaul of assembly.

– END –

INTENTIONALLY LEFT BLANK

CONTROLLING

PROPELLER GOVERNOR

REMOVAL OF PROPELLER GOVERNOR

1. Remove the upper engine cowl.
2. Disconnect the control cable end from the governor control arm.
3. Remove the governor mounting stud nuts. It will be necessary to raise the governor as the nuts are being removed before they can be completely removed.
4. Remove the mounting gasket. If the governor is to be removed for a considerable length of time and another unit not substituted, it is advisable to cover the mounting pad to prevent damage caused by foreign matter.

INSTALLATION OF PROPELLER GOVERNOR

1. Clean the mounting pad thoroughly, making very certain that there are no foreign particles in the recess around the drive shaft.
2. Place the governor mounting gasket in position with the raised portion of the screen facing awav from the engine.
3. Align the splines on the governor shaft with the engine drive and slide the governor into position.
4. With the governor in position, raise the governor enough to install washers and start mounting nuts. Torque nuts even.
5. Connect the control cable end to the governor control arm. The ball stud is installed in the inner hole of the control arm.
6. Adjust governor control per Rigging and Adjustment of Propeller Governor.
7. Install engine cowl.

RIGGING AND ADJUSTMENT OF PROPELLER GOVERNOR (Refer to Figure 5.)

1. Prior to adjusting the propeller governor high rpm setting, the control linkage should be thoroughly checked for correct function.

– NOTE –

A calibrated tachometer must be used to ascertain propeller high rpm setting. Final high rpm adjustment must be checked in flight or during high speed taxL

To check rigging, move propeller control full forward. The propeller governor high rpm stop must contact the adjusting screw when the cockpit control is 0.010 to 0.030 inch from the cockpit mechanical stop. If adjustment is required complete the following steps.

a. Insure that the governor control arm is located approximately as shown on Figure 5.
b. Adjust control cable end hardware to obtain cockpit control cushion. Insure there is adequate thread engagement of clevis end and rod end bearing (witness holes) after adjustment.
c. Insure that the control cable assembly is not bottoming internally.

CONTROLLING (Cont.)

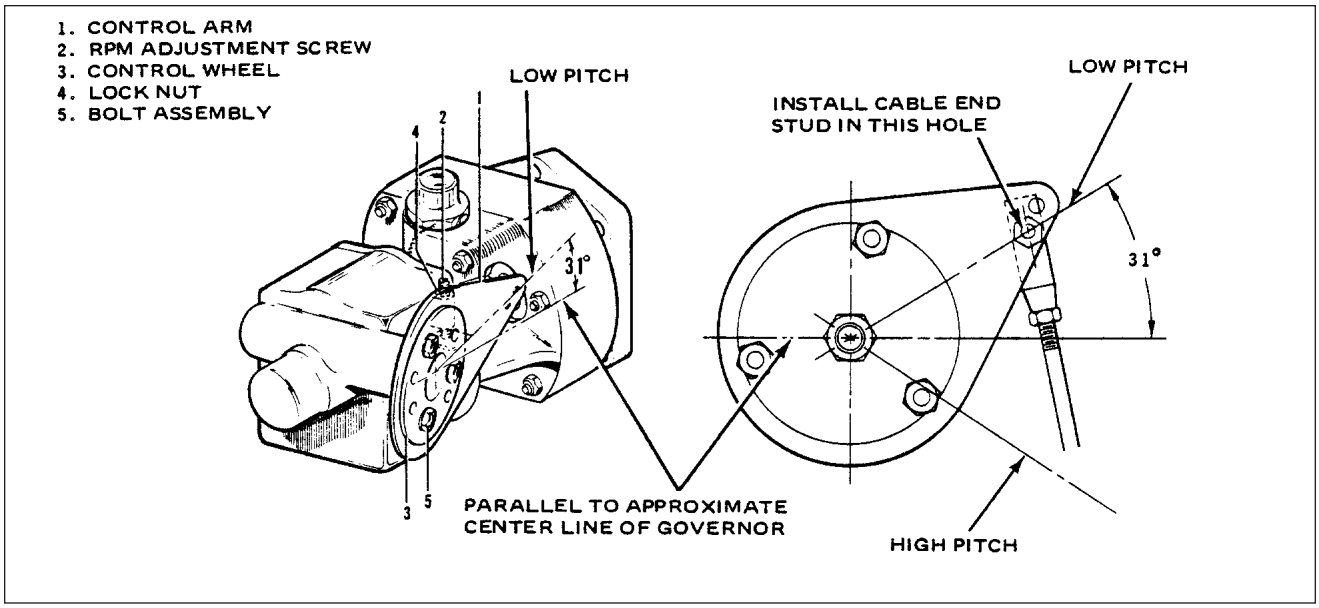

Propeller Governor.
Figure 5

2. Start engine, park 90° to wind direction and warm in normal manner.
3. To check high rpm low pitch setting, move the propeller control all the way forward. At this position the governor speed control arm should be against the high rpm fine adjusting screw. With the throttle full forward, observe engine rpm which should be adjusted as follows:
   a. Shut down the engine and remove the upper engine cowl.
   b. Adjust the governor by means of the fine adjustment screw for 2700 rpm. To do this, loosen the high RPM fine adjustment screw locknut and turn the screw in a clockwise direction to decrease engine speed or in a counterclockwise direction to increase engine speed.

– NOTE –

One revolution of thefine adjllstment screw will increase or decrease the engine speed approximately 20 rpm.

   c. Reinstall upper engine cowl and repeat step b to ascertain proper rpm setting.
   d. After setting the proper high rpm adjustment, run the self-locking nut on the fine adjustment screw against the base projection to lock.
   e. Ascertain that the governor control arm is adjusted to the proper angle on the control wheel as shown in Figure 5.
5. With the high rpm adjustment complete, the control system should be adjusted so that the governor control arm will contact the high rpm stop when the propeller lever is 0.010 toO.030 of an inch from forward stop on the power quadrant. To adjust the control travel, disconnect the control cable end from the control arm, loosen the cable end jam nut and rotate the rod end to obtain the desired lever clearance. Reconnect the cable end and tighten jam nut.
6. It is usually only necessary to adjust the high rpm setting of the governor control system, as the action automatically takes care of the positive high pitch setting.

INTENTIONALY LEFT BLANK

INTENTIONALY LEFT BLANK

CHAPTER

70

STANDARD PRACTICES ENGINES

CHAPTER 70 - STANDARD PRACTICES - ENGINE

TABLE OF CONTENTS/EFFECTIVITY

CHAPTER SECTION	SUBJECT	GRID NO.	EFFECTIVITY
70-00-00	STANDARD PRACTICES - ENGINE	3K12	July 1, 1993

STANDARD PRACTICES - ENGINE.

The following suggestions should be applied wherever they are needed when working on the power plant.

1. To insure proper reinstallation and/or assembly, tag and mark all parts, clips, and brackets as to their location prior to their removal and/or disassembly.
2. During removal of various tubes or engine parts, inspect them for indications of scoring, burning or other undesirable conditions. To facilitate reinstallation, observe the location of each part during removal. Tag any unserviceable part and/or units for investigation and possible repair.
3. Extreme care must be taken to prevent foreign matter from entering the engine, such as lockwire, washers, nuts, dirt, dust, etc. This precaution applies whenever work is done on the engine, either on or off the aircraft. Suitable protective caps, plugs, and covers must be used to protect all openings as they are exposed.

– NOTE –

Dust caps used to protect open lines must always be installed OVER the tube ends and NOT IN the tube ends. Flow through the lines may be blocked off if lines are inadvertently installed with dust caps in the tube ends.

4. Should any items be dropped into the engine, the assembly process must stop and the item removed, even though this may require considerable time and labor. Insure that all parts are thoroughly clean before assembling.
5. Never reuse any lockwire, lockwashers, tablocks, tabwashers or cotter pins. All lockwire and cotter pins must fit snugly in holes drilled in studs and bolts for locking purposes. Cotter pins should be installed so the head fits into the castellation of the nut, and unless otherwise specified, bend one end of the pin back over the stud or bolt and the other end down flat against the nut. Use only corrosion resistant steel lockwire and/or cotter pins. Bushing plugs shall be lockwired to the assembly base or case. Do not lockwire the plug to the bushing.
6. All gaskets, packings and rubber parts must be replaced with new items of the same type at reassembly. Insure the new nonmetallic parts being installed show no sign of having deteriorated in storage.
7. When installing engine parts which require the use of a hammer to facilitate assembly or installation, use only a plastic or rawhide hammer.
8. Anti-seize lubrication should be applied to all loose-fit spline drives which are external to the engine and have no other means of lubrication. For certain assembly procedures, molybdenum disulfide in either paste or powdered form mixed with engine oil or grease may be used.

– CAUTION –

Ensure that Anti-seize compounds are applied in thin even coats, and that excess compound is completely removed to avoid contamination of adjacent parts.

9. Temporary marking methods are those markings which will ensure identification during ordinary handling, storage and final assembly of parts.

INTENTIONALLY LEFT BLANK

CHAPTER

71

POWER PLANT

CHAPTER 71 - POWER PLANT

TABLE OF CONTENTS/EFFECTIVITY

CHAPTER SECTION	SUBJECT	GRID NO.	EFFECTIVITY
71-00-00	GENERAL	3K16	July 1, 1993
71-00-00	Description	3K16	July 1, 1993
71-00-00	Troubleshooting	3K16	July 1, 1993
71-00-00	Engine Maintenance	3L1	July 1, 1993
71-00-00	Removal of Engine (PA-32R-301)	3L1	July 1, 1993
71-00-00	Removal of Engine (PA-32R-301T)	3L2	July 1, 1993
71-00-00	Installation of Engine (PA-32R-301)	3L3	July 1, 1993
71-00-00	Installation of Engine (PA-32R-301T)	3L4	July 1, 1993
71-10-00	COWLING	3L6	July 1, 1993
71-10-00	Cowling Maintenance	3L6	July 1, 1993
71-10-00	Removal of Cowling (PA-32R-301 SP)	3L6	July 1, 1993
71-10-00	Installation of Cowling (PA-32R-301 SP)	3L6	July 1, 1993
71-10-00	Removal of Cowling (PA-32R-301 II HP)	3L6	July 1, 1993
71-10-00	Installation of Cowling (PA-32R-301 II HP)	3L6	July 1, 1993
71-10-00	Removal and Installation of Cowling (PA-32R-301T)	3L7	July 1, 1993
71-10-00	Cleaning, Inspection and Repair of Cowling	3L7	July 1, 1993

GENERAL.

DESCRIPTION.

The PA-32R-301 is powered by a 300 horsepower Lycoming engine, Model IO-540-K1G5D (IO-540-K1G5 on the Saratoga II HP). The engine is furnished with a starter, 60 ampere (90 ampere on Saratoga II HP), 12-volt alternator, voltage regulator, shielded ignition system, vacuum pump drive, fuel pump, fuel injector and a dry paper type induction air filter. In the event of air stoppage through the filter, an alternate air source can be opened when selected manually by the use of a lever in the cockpit.

The Saratoga SP exhaust system consists of three individual mufflers combined into one unit. Each set of opposing cylinders feeds into one muffler. A heat shroud encircles the complete unit to provide heat for both the cabin and defrosting. The Saratoga II HP exhaust system consists of two individual mufflers, one on each side of the engine. The left side cylinders feed into a muffler on the left side of the engine and the right side cylinders feed into a muffler on the right side of the engine. A heat shroud encircles each muffler to provide heat for both the cabin and defrosting.

The engine is provided with a constant speed propeller controlled by a governor mounted on the engine supplying oil through the propeller shaft at various pressures.

The PA-32R-301T is powered by a Lycoming engine model TIO-540-S1AD. This engine is a direct drive, six cylinder, fuel injected, horizontally opposed, air cooled engine with top side exhaust incorporating oil jets for internal piston cooling. The engine is furnished with a starter, 60 amperes, 12-volt alternator, voltage regulator, shielded ignition system, vacuum pump drive, fuel injector and a dry paper type induction filter. In the event of air stoppage through the filter an alternate air source can be opened when selected manually by the use of a lever in the cockpit. An automatic alternate air door is also provided on the induction tube downstream from the blower.

The turbocharged engine develops 300 horsepower at 2700 rpm and 36 inches of mercury manifold pressure at take-off for a maximum 5 minute limit. Maximum continuous power rating is 270 horsepower at 2575 rpm and 33 inches of mercury manifold pressure to an altitude of approximately 15,000 feet. The turbocharger-blower has an integral overboost safety valve. Output is controlled by an interconnected control between the injector throttle arm and the wastegate control arm. This mechanically programmed interconnect eliminates a separate wastegate control lever.

The engine is provided with a constant speed propeller controlled by a governor mounted on the engine supplying oil through the propeller shaft at various pressures.

TROUBLESHOOTING.

Troubles peculiar to the power plant are listed in Chart 1 along with their probable causes and suggested remedies. When troubleshooting the engine, ground the magneto primary circuit before performing any checks of the engine.

– NOTE –

For complete information on engine maintenance contact Textron Lycoming, 652 Oliver Street, Williamsport, PA 17701.

CHART 1
TROUBLESHOOTING (ENGINE) (Sheet 1 of 4)

Trouble	Cause	Remedy
Failure of engine to start.	Lack of fuel.	Check fuel system for leaks. Fill Fuel tank. Clean dirty lines, strainers or fuel valves. Check fuel selector valve for proper tank. Check fuel pressure with electric boost pump ON. Check mixture control knob for full rich.
	Overpriming	Open throttle and “unload” engine by engaging starter. Mixture in idle cut-off.
	Incorrect throttle setting.	Open throttle to one-eighth of its range.
	Defective spark plugs.	Clean and adjust, or replace spark plugs.
	Defective ignition wire.	Check with electric tester and replace defective wires.
	Defective battery.	Replace with charged battery.
	Improper operation of magneto breaker.	Clean points. Check internal timing of magnetos.
	Lack of sufficient fuel flow.	Disconnect fuel line at fuel injector and check fuel flow.
	Water in fuel injector.	Drain fuel injector and fuel lines.
	Internal failure.	Check oil screens for metal particles. If found, complete overhaul of engine may be indicated.

CHART 1
TROUBLESHOOTING (ENGINE) (Sheet 2 of 4)

Trouble	Cause	Remedy
Failure of engine to idle properly.	Incorrect idle mixture.	Adjust mixture.
	Leak in the induction system.	Tighten all connections in the induction system. Replace any parts that are defective.
	Incorrect idle adjustment.	Adjust throttle stop to obtain correct idle.
	Uneven cylinder compression.	Check condition of piston rings and valve seats.
	Faulty ignition system.	Check entire ignition system.
	Insufficient fuel pressure.	Adjust fuel pressure.
Lower power and uneven running.	Mixture too rich; indicated by sluggish engine operation, red exhaust flame at night. Extreme cases indicated by black smoke from exhaust.	Readjustment of fuel injector by authorized personnel is indicated.
	Mixture too lean; indicated by overheating or backfiring.	Check fuel lines for dirt or other restrictions. Check fuel injection nozzles.
	Leaks in induction system.	Tighten all connections in the induction system. Replace any parts that are defective.
	Defective spark plugs.	Clean and gap, or replace spark plugs.
	Improper fuel.	Drain and refill tank with recommended fuel.
	Magneto breaker points not working properly.	Clean points. Check internal timing of magnetos.
	Defective ignition wire.	Check wire with electric tester. Replace defective wire.
	Defective spark plug terminal connectors.	Replace connectors on spark plug wire.

CHART 1
TROUBLESHOOTING (ENGINE) (Sheet 3 of 4)

Trouble	Cause	Remedy
Failure of engine to develop full power.	Leak in the induction system.	Tighten all connections in the induction system. Replace any parts that are defective.
	Throttle lever out of adjustment.	Adjust throttle lever.
	Improper fuel flow.	Check strainer, gauge, and flow at fuel injector inlet.
	Restriction in air scoop.	Examine air scoop and remove restrictions.
	Improper fuel.	Drain and refill tank with recommended fuel.
	Faulty ignition.	Tighten all connections. Check system with tester. Check ignition timing.
Rough engine.	Cracked engine mount.	Replace or repair mount.
	Defective mounting bushings.	Install new mounting bushings.
	Uneven compression.	Check compression.
Low oil pressure.	Insufficient oil.	Fill sump with recommended oil.
	Air lock or dirt in relief valve.	Remove and clean oil pressure relief valve.
	Leak in suction line or pressure line.	Check gasket between accessory housing and crankcase.
	Dirty oil strainers.	Remove and clean oil strainers.
	Defective pressure gauge.	Replace gauge.
	Stoppage in oil pump intake passage.	Check line for obstruction. Clean suction strainer.
	High oil temperature.	See “High Oil Temperature” in “Trouble” column.

CHART 1
TROUBLESHOOTING (ENGINE) (Sheet 4 of 4)

Trouble	Cause	Remedy
High Oil Temperature.	Insufficient air cooling.	Check air inlet and outlet for deformation or obstruction.
	Insufficient oil supply.	Fill oil sump to proper level with specified oil.
	Low grade of oil.	Replace with oil conforming to specifications.
	Clogged oil lines or strainers.	Remove and clean oil strainers.
	Excessive blow-by.	Usually caused by worn or stuck rings.
	Failing or failed bearing.	Examine sump for metal particles. If found, overhaul of engine is indicated.
	Defective temperature gauge.	Replace gauge.
Excessive oil consumption.	Low grade of oil.	Fill tank with oil conforming to specifications.
	Failing or failed bearings.	Check sump for metal particles.
	Worn piston rings.	Install new rings.
	Incorrect installation of piston rings.	Install new rings.
	Failure of rings to seat (new nitrided cylinders)	Use mineral base oil. Climb to cruise altitude at full power and operate at 75% cruise power setting with high oil temperature until oil consumption stabilizes.

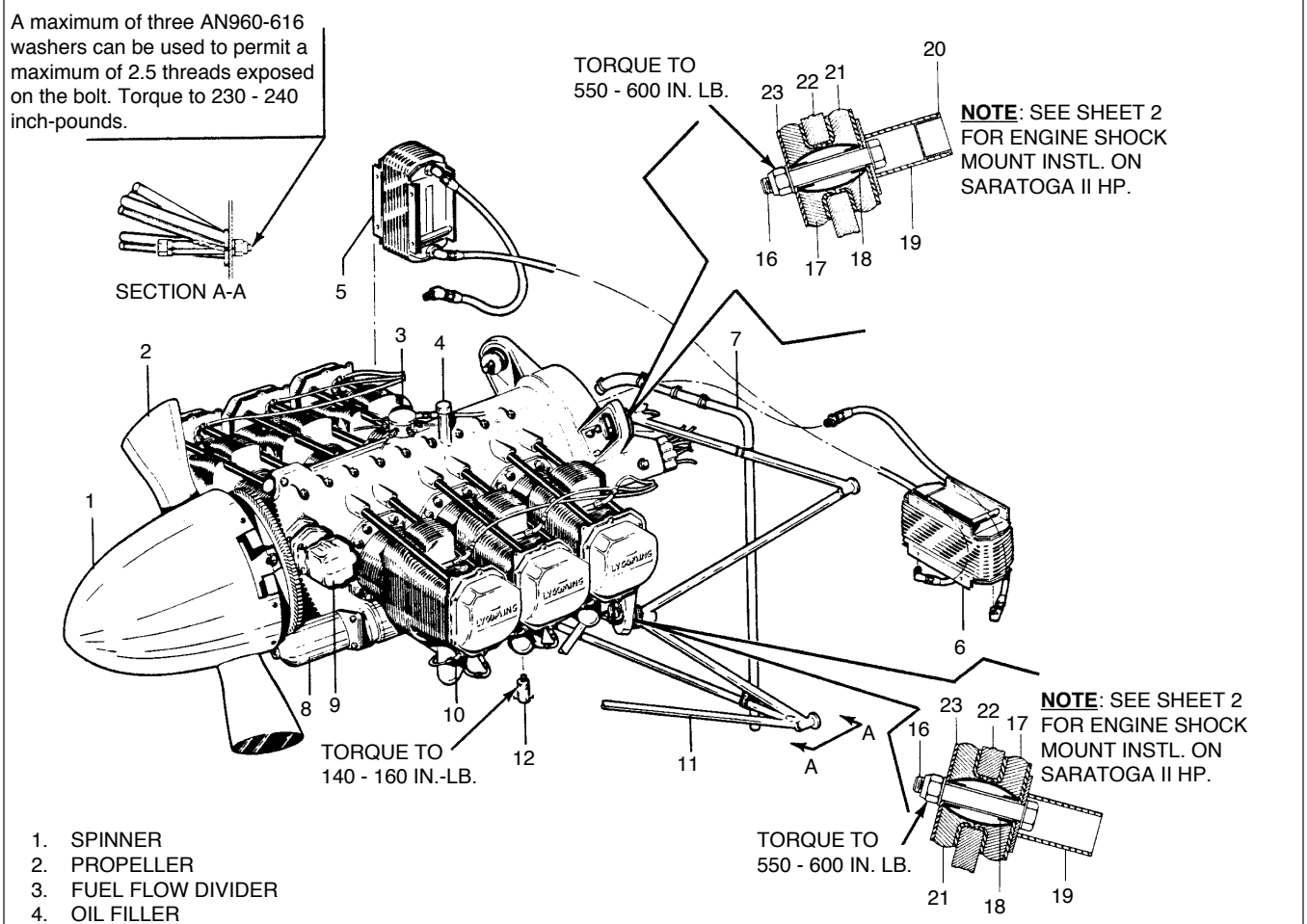

1. SPINNER
2. PROPELLER
3. FUEL FLOW DIVIDER
4. OIL FILLER
5. OIL COOLER, RIGHT
6. OIL COOLER, LEFT
7. VENT TUBE
8. STARTER
9. GOVERNOR
10. FUEL NOZZLE
11. ENGINE MOUNT
12. VALVE, OIL DRAIN
13. AIR FILTER
14. COVER, FILTER
15. FILTER CAP
16. BOLT, NUT, WASHER
17. SANDWICH (J-3049-38) OR (J-3049-66)
18. SPACER (J-12333-2) OR (Y-6769-1-S)
19. ENGINE MOUNT
20. PLUG
21. SANDWICH (J-3049-35) OR (J-3049-66)
22. ENGINE
23. MOUNTING KIT (J-3804-31) OR MOUNTING KIT (J-3804-40)

Engine Installation (PA-32R-301)
Figure 1 (Sheet 1 of 2)

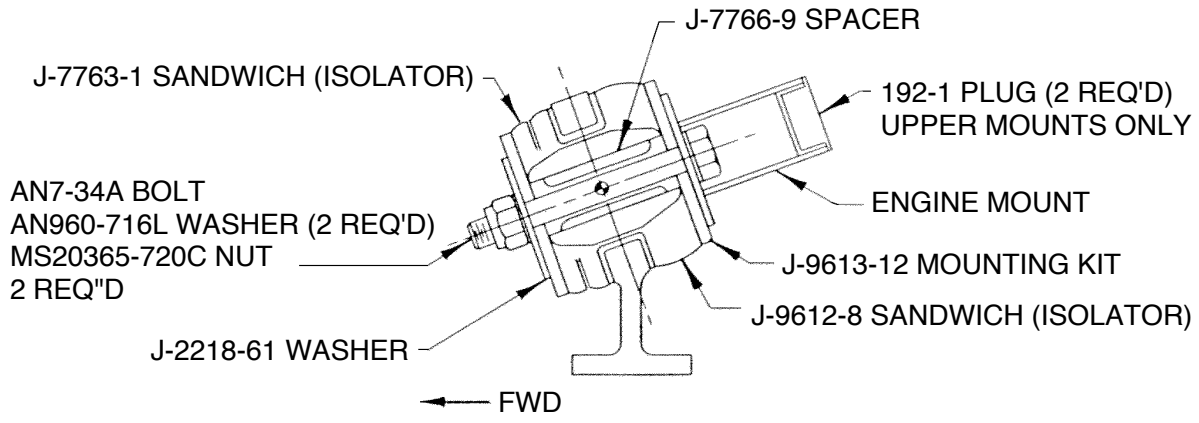

TYPICAL BOTH UPPER MOUNTS

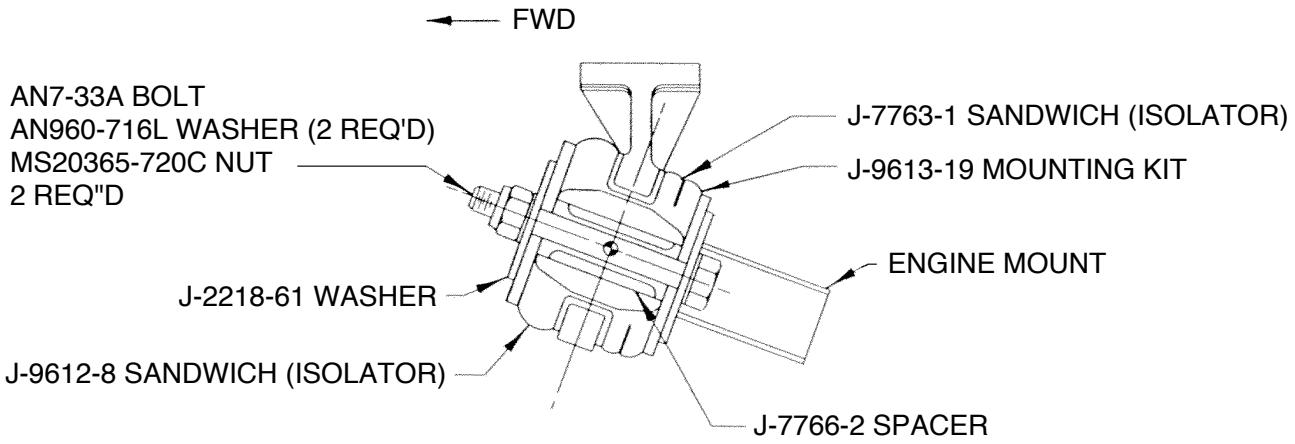

TYPICAL BOTH LOWER MOUNTS

ENGINE MOUNT INSTALLATION FOR SARATOGA II HP

Engine Installation (PA-32R-301)
Figure 1 (Sheet 2 of 2)

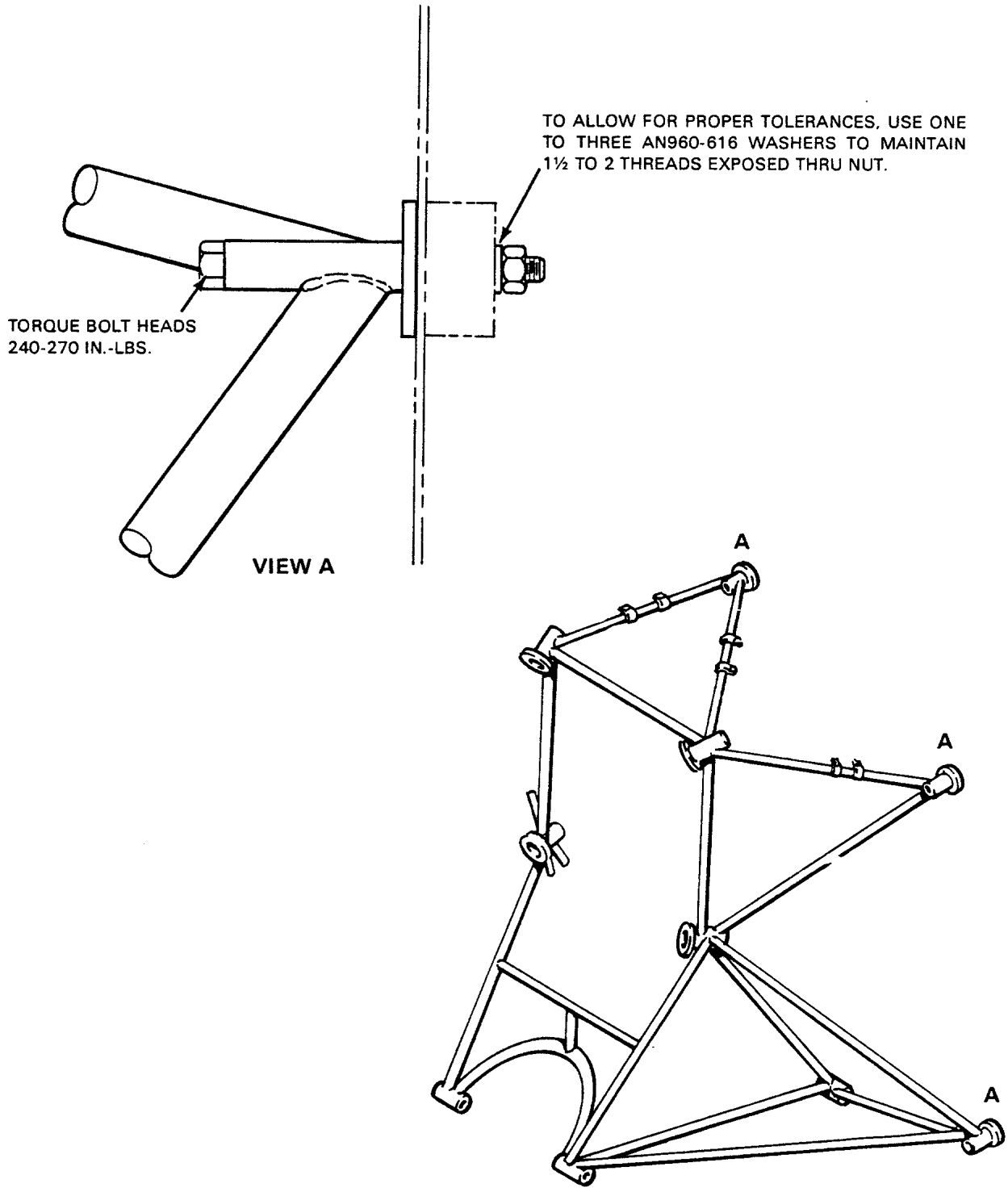

Engine Mount Installation (PA-32R-301 / 301T) (Dynafocal Mount)
Figure 2

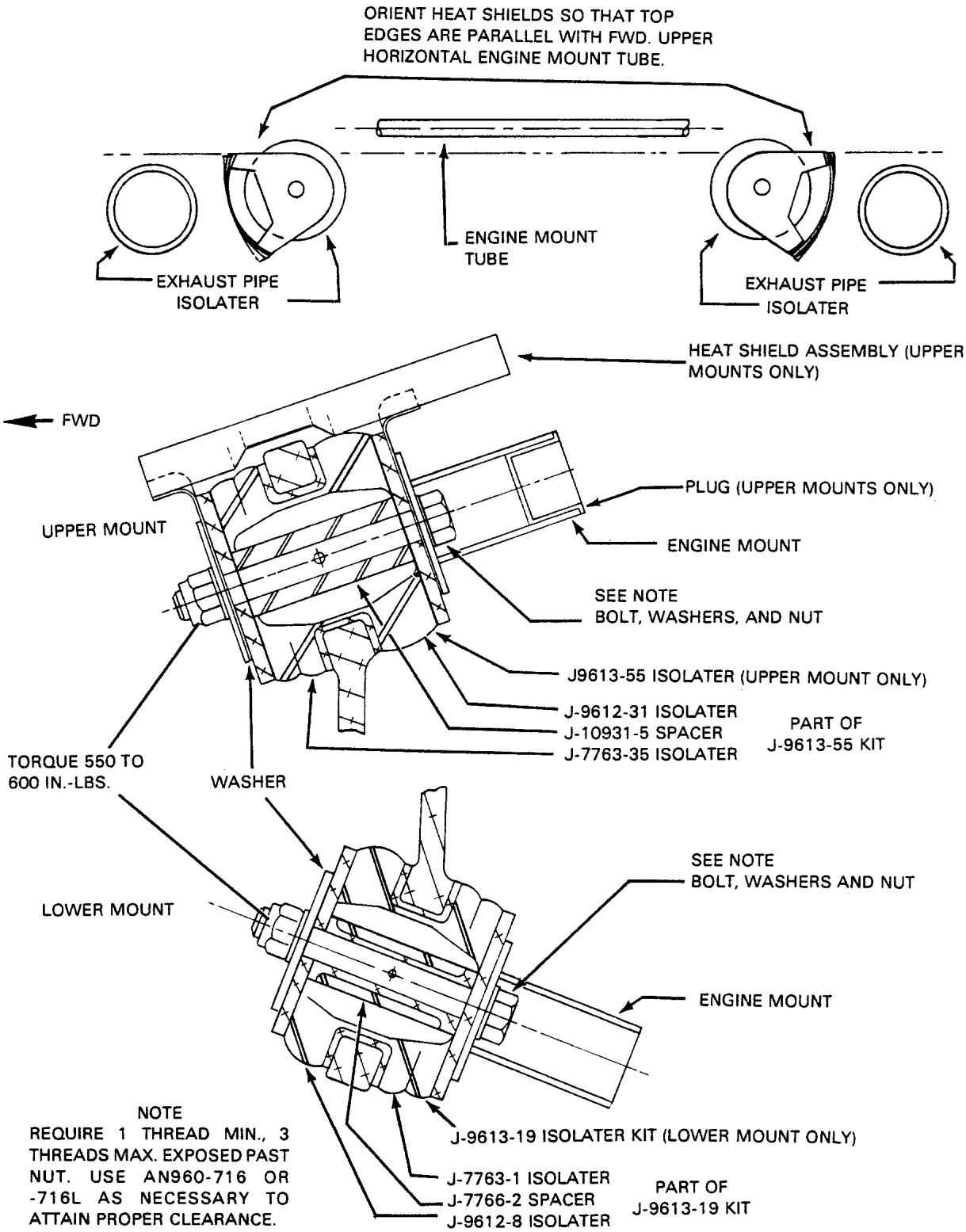

Engine Mount Installation (PA-32R-301T) (Lord Mounts)
Figure 3

ENGINE MAINTENANCE.

REMOVAL OF ENGINE. (PA-32R-301)

1. Turn off all electrical switches in the cockpit and then disconnect the battery ground wire at the battery.
2. Ascertain that the fuel selector lever is in the "OFF" position.
3. Remove the propeller. (Refer to Chapter 61.)
4. Disconnect the starter positive and ground leads at the injector. (The injector may be removed if desired.)
5. Disconnect the governor control cable at the governor and cable attachment clamps.
6. Disconnect the heater hose at the muffler.
7. Disconnect the throttle and mixture cables at the injector. (The injector may be removed if desired.)
8. Disconnect the fuel pump supply line at the left side of the pump. Disconnect pump vent line.

– NOTE –

Where a question may arise as where to reconnect a hose, line or wire; the item at the separation should be identified (tagged) to facilitate reinstallation. Open fuel, oil, vacuum lines and fittings should be covered to prevent contamination.

9. Disconnect both lines from each oil cooler at the coolers.
10. Disconnect the magneto "P" leads at the magnetos.
11. Disconnect the engine vent tube at the engine.
12. Disconnect the engine oil temperature lead at the aft end of the engine.
13. Disconnect the tachometer drive cable at the engine.
14. Untie the ignition harness hoses and lines at the aft of the engine.
15. Disconnect the vacuum pump lines at pump and remove the fittings from pump.
16. Disconnect the oil pressure line at the engine.
17. Disconnect the static and fuel flow line at the right rear engine baffle.
18. Disconnect the manifold pressure line at the right rear side of the engine.
19. Disconnect the injector line at the flow divider.
20. Disconnect the alternator leads and the cable attachment clamps.
21. Attach a one-half ton (minimum) hoist to the hoisting straps and relieve the tension from the engine mounts .

– NOTE –

Place a tail stand under the tail of the airplane before removing the engine.

22. Check the engine for any attachments remaining to obstruct its removal.
23. Drain the engine oil, if desired, and then close drain.
24. Remove the four engine mount assemblies and swing the engine free, being careful not to damage any attaching parts.

REMOVAL OF ENGINE. (PA-32R-301T)

1. Turn off all electrical switches in the cockpit and then disconnect the battery ground wire at the battery.
2. Ascertain that the fuel selector lever is in the "OFF" position.
3. Remove the propeller. (Refer to Chapter 61.)

– NOTE –

Where a question may arise as where to reconnect a hose, line or wire; the item at the separation should be identified (tagged) to facilitate reinstallation. Open fuel, oil, vacuum lines and fittings should be covered to prevent contamination.

4. Make the following electrical disconnections:
   a. Starter positive and ground leads.
   b. Alternator leads and the cable attachment clamps.
   c. Magneto "P" leads to the magnetos.
   d. Oil temperature, cylinder head temperature and exhaust gas temperature leads.
5. Mechanical disconnections necessary for engine removal are as follows:
   a. Control cable at the propeller governor and cable attachment clamps.
   b. The throttle and mixture cables at the injector.
   c. The tachometer drive cable at the engine.
6. The following disconnections of environmental equipment are also necessary:
   a. Heater and defroster hoses at the muffler.
   b. Air conditioning compressor lines.
7. The following engine lines should also be disconnected.
   a. Manifold pressure line at the right rear side of the engine.
   b. Oil pressure line at the engine.
   c. Vacuum pump lines at the pump.
   d. Deck pressure and fuel flow lines at the engine baffle.
   e. Fuel supply line at the engine pump and pump drain tube.
   f. Induction air inlet duct hose.
   g. Oil breather tube from the engine mount.
   h. Cooling ducts to vacuum pump and fuel pump shroud.
   i. Remove oil cooler support bracket.
   j. Disconnect oil cooler at mounting bolts.
8. Attach one-half ton (minimum) hoist to the hoisting straps and relieve the tension from the engine mounts.

– NOTE –

Place tail stand under the tail of the airplane before removing the engine.

9. Check the engine for any attachments remaining to obstruct its removal.
10. Drain the engine oil, if desired. and then close drain.
11. Remove the four engine mount assemblies and wing the engine free. being careful not to damage any attaching parts.

INSTALLATION OF ENGINE. (PA-32R-301) (Refer to Figure 1.)

1. Attach a one-half ton (minimum) hoist to the engine hoisting straps and swing the engine into alignment with its attaching points.
2. Insert an engine mount bolt, with washer against head, in the engine mount and slide half of the mount assembly on the bolt. (Refer to Figure 1 for proper shock mount assembly.) Repeat this procedure for the other three attachment parts.

– NOTE –

Shock mount Part No. J-3049-38 sandwich (Saratoga SP) and J-7763-1 sandwich (Saratoga II HP), must be positioned on the compression side of the engine lugs, with the upper mounts on the forward side, and the lower mounts on the aft side. The part number is stamped on the metalface of the mount. (Refer to Figure 1.)

3. Position the mounting lugs of the engine so that they align with the engine mount attaching points, then move the engine rearward onto the mounts.
4. Slide onto each mounting bolt a spacer and the forward half of the mount. Install washers and nut, and torque the nuts of the bolts to 550 to 600 inch-pounds.
5. Connect the alternator leads and secure cable with clamps.
6. Connect the injector line to the flow divider.
7. Connect the manifold pressure line at the right rear side of the gauge.
8. Connect the static and fuel flow line at the right rear engine baffle.
9. Connect the oil pressure line.
10. Install the line fitting in the vacuum pump and install lines.
11. Connect the tachometer drive cable.
12. Connect the oil temperature lead.
13. Connect the engine vent tube.
14. Connect the oil cooler lines to each oil cooler.
15. Connect the magneto “P” leads. Check that magneto switch is “OFF”.
16. Connect the fuel pump supply and vent line.
17. Install the injector.
18. Connect the throttle and mixture cables to the injector. Check adjustment of the control.
19. Connect the heater hose to the muffler.
20. Check adjustment of the alternate air door.
21. Connect the governor control cable and secure with clamps.
22. Connect the starter positive and ground leads and secure cables with clamps.
23. Secure the ignition harness, lines, hoses, wires, etc. that may be loose.
24. Install cowling.

– NOTE –

To avoid possible high speed bearing failure resulting from lack of lubrication during initial starts after engine installation, refer to the latest revision of Lycoming Service Instructions No. 1241 for instructions on Pre-Oiling engines.

25. Perform an engine operation check.

INSTALLATION OF ENGINE. (PA-32R-301T) (Refer to Figures 2 & 3.)

1. Attach a one-half ton (minimum) hoist to the engine hoisting straps and swing the engine into alignment with its attaching points.
2. Insert an engine mount bolt, with washer against head, in the engine mount and slide half of the mount assembly on the bolt. (Refer to Figures 2 & 3 for proper shock mount assembly.) Repeat this procedure for the other three attachment points.

– NOTE –

Upper mounts also have a heat shield assembly which must be installed with the engine mounts. Refer to Figures 2 & 3 for correct positioning of heat shield assembly.

3. Position the mounting lugs of the engine so that they align with the engine mount attaching points, then move the engine rearward onto the mounts.
4. Slide onto each mounting bolt a spacer and the forward half of the mount. Install washer and nut, and torque the nuts of the bolts to 550 to 600 inch-pounds.
5. Install propeller (Refer to Chapter 61).
6. Make the following electrical connections:
   a. The starter positive and ground leads and secure cables with clamps.
   b. The alternator leads and secure cable with clamps.
   c. The magneto “P” leads. Check that magneto switch is “OFF.”
   d. Oil temperature, cylinder head temperature and exhaust gas temperature leads.
7. Mechanical connections necessary for engine installation are as follows:
   a. Governor control cable and secure with clamps.
   b. The throttle and mixture cables to the injector. Check adjustment of the control.
   c. Connect the tachometer drive cable.
8. The following connections of environmental equipment are also necessary:
   a. Heater and defroster hoses at the muffler.
   b. Air conditioning compressor lines (Refer to Chapter 21).
9. The following engine lines should also be connected.
   a. Manifold pressure line at the right rear side of the engine.
   b. Oil pressure line at the engine.
   c. Vacuum pump lines at the pump.
   d. Deck pressure and fuel flow lines at the engine baffle.
   e. Fuel supply line at the engine pump and pump drain tube.
   f. Induction air inlet hose.
   g. Oil breather tube to the engine mount.
   h. Check the engine for any connections remaining.
   i. Install the proper grade and amount of engine oil.
   j. Connect cooling ducts to vacuum pump and fuel pump shroud.
10. Turn on fuel valve; open throttle full and turn on the electric fuel pump, and check the fuel lines and fittings for leaks.
11. Install engine cowling in the reverse order of removal (Refer to Removal and Installation of Engine Cowling PA-32R-301T). Connect the electrical lead to the landing light.

INSTALLATION OF ENGINE. (PA-32R-301T) (continued)

– NOTE –

To avoid possible high speed bearing failure resulting from lack of lubrication during initial starts after engine installation, refer to the latest revision of Lycoming Service Instructions No. 1241 for instructions on Pre-Oiling Engines.

12. Perform an engine operational check.

– END –

COWLING.

COWLING MAINTENANCE.

REMOVAL OF COWLING. (PA-32R-301 SP)

1. Release the cowling fasteners, two on each side and two at the top aft of the cowling.
2. Lift the aft end of the cowling and then slide it forward to release the two stud type front fasteners. Remove the top cowling.
3. Disconnect the landing light lead at the quick disconnect at the right rear side of the bottom cowling.
4. Remove the induction air filter access door, the filter and four bolts which hold the air box to the cowling.
5. Remove the screws securing the bottom cowling at its aft end and fuselage firewall flange.
6. Remove screws which support bottom cowling to the nose gear doors support brackets and fuselage firewall flange.
7. Push nose gear doors inward against spring pressure and remove bottom cowling.

INSTALLATION OF COWLING. (PA-32R-301 SP)

1. Position the bottom cowling and secure in place with screws along the sides and nose gear doors support brackets.
2. Connect the air box to the cowling with four bolts and install the filter and access cover.
3. Connect the electrical lead to the landing light.
4. Install the upper cowling.

REMOVAL OF COWLING. (PA-32R-301 II HP)

1. Release quarter-turn fasteners (5 on each side, 2 on top aft).
2. Remove machine screws from around intake (2 each side).
3. Pull slightly aft and then up, and remove upper cowling.
4. Remove the screws securing the bottom cowling at its aft end and fuselage firewall flange.
5. Remove screws which support bottom cowling to the nose gear doors support brackets and fuselage firewall flange.
6. Remove screws securing induction filter housing to lower cowling (8 places) and disengage housing from NACA duct.
7. Remove clamps securing fresh air inlet.
8. Remove clamps securing alternator cooling air.
9. Push nose gear doors inward against spring pressure and remove bottom cowling.

INSTALLATION OF COWLING. (PA-32R-301 II HP)

1. Position the bottom cowling in place.
2. Engage filter housing to NACA duct.
3. Secure bottom cowling with screws along the sides, nose gear doors support brackets, and firewall flange.
4. Secure filter housing to lower cowling assembly.
5. Install hose and secure clamp for fresh air inlet.
6. Install hose and secure clamp for alternator cooling air.
7. Install the upper cowling.

REMOVAL AND INSTALLATION OF COWLING. (PA-32R-301T)

1. Release the upper cowling stud fasteners, at the forward and aft end of the cowling.
2. Release the side latches, two each side.
3. Remove the upper cowling by lifting straight up to clear the positioning studs and latch eyebolts.
4. Remove the screws attaching the nose cowling to the bottom cowling.
5. Disconnect the landing light lead at the quick disconnect just behind the light.
6. Support the cowling and remove the screws which attach the bottom cowling to the nose gear doors support brackets, outboard cowling flap hinge brackets and the fuselage firewall flange.
7. Loosen the nuts attaching the air filter box to cowling brackets.
8. Push nose gear doors inward against spring pressure and remove bottom cowling.
9. Install cowling in reverse order of removal.

CLEANING, INSPECTION AND REPAIR OF COWLING.

1. Clean cowling with a suitable cleaning solvent and wipe dry with a clean cloth.
2. Inspect cowling for dents, cracks, loose rivets, elongated holes and damaged or missing fasteners.
3. Repair all defects to prevent further damage.

– END –

THIS PAGE INTENTIONALLY LEFT BLANK

GRIDS 3L9 THRU 3L24 INTENTIONALLY LEFT BLANK



SARATOGA SP
SARATOGA II HP

MAINTENANCE MANUAL

PA-32R-301 SARATOGA SP
PA-32R-301 SARATOGA II HP
PA-32R-301T SARATOGA SP

Card 4 of 4

THIS HANDBOOK INCLUDES THE MAINTENANCE INFORMATION REQUIRED TO BE AVAILABLE BY FAR PART 23.

PART NUMBER 761 719

Published by
Technical Publications

Piper Aircraft Corporation
2926 Piper Drive
Vero Beach, Florida 32960
U.S.A.

Copyright 1990 Piper Aircraft Corporation

All rights reserved. No part of this publication may be reproduced, stored in a retrieval system, or transmitted, in any form or by any means, electronic, mechanical, photocopying, recording, or otherwise, without the prior written permission of the Piper Aircraft Corporation, except for the inclusion of brief quotations in a review.

INTRODUCTION

TABLE OF CONTENTS/EFFECTIVITY

CHAPTER SECTION	SUBJECT	GRID NO.	EFFECTIVITY
	INTRODUCTION	4A4	July 1, 1993
	System/Chapter Index Guide	4A4	July 1, 1993

INTRODUCTION

A. System/Chapter Index Guide

The following System/Chapter, Subsystem Section Index Guide is prepared in accordance with GAMA Specification No. 2 for use with Maintenance Manuals. The following chapters are not applicable to this Maintenance Manual: 31, 36, 38, 49, 53, 54, 60, 72, 75, and 83.

SYSTEM/ CHAPTER	SUB-SYSTEM/ SECTION – GRID NUMBER	TITLE
INTRODUCTION		
4	AIRWORTHINESS LIMITATIONS	
	00 – 1C3	General
5	TIME LIMITS/MAINTENANCE CHECKS	
	00 – 1C6	General
	10 – 1C7	Time Limits
	20 – 1C8	Scheduled Maintenance
	50 – 1D2	Unscheduled Maintenance Checks
6	DIMENSIONS AND AREAS	
	00 – 1D8	General
7	LIFTING AND SHORING	
	10 – 1D23	Jacking
8	LEVELING AND WEIGHING	
	10 – 1E3	Weighing and Balancing
	20 – 1E4	Leveling
9	TOWING AND TAXIING	
	10 – 1E7	Towing
	20 – 1E8	Taxiing
10	PARKING AND MOORING	
	10 – 1E11	Parking
	20 – 1E12	Mooring
11	REQUIRED PLACARDS	
	20 – 1E15	Exterior Placards and Markings
	30 – 1E19	Interior Placards and Markings
12	SERVICING	
	00 – 1F4	General
	10 – 1F7	Replenishing
	20 – 1G1	Scheduled Servicing
20	STANDARD PRACTICES - AIRFRAME	
	00 – 1G19	General

INTRODUCTION (cont.)

A. System/Chapter Index Guide (cont.)

SYSTEM/ CHAPTER	SUB-SYSTEM/ SECTION – GRID NUMBER	TITLE
21	ENVIRONMENTAL SYSTEMS	
	00 – 1H8	General
	40 – 1H10	Heating
	50 – 1H14	Cooling
22	AUTO FLIGHT	
	00 – 1J9	General
23	COMMUNICATIONS	
	00 – 1J14	General
	20 – 1J16	Emergency Locator Transmitter
24	ELECTRICAL POWER	
	00 – 1K1	General
	30 – 1K3	DC Generation
	40 – 1L19	External Power
	50 – 1L21	Electrical Load Distribution
25	EQUIPMENT/FURNISHINGS	
	10 – 2A15	Flight Compartment
27	FLIGHT CONTROLS	
	00 – 2A23	General
	10 – 2B7	Aileron and Tab
	20 – 2B18	Rudder and Tab
	30 – 2C5	Elevator and Tab
	50 – 2C21	Flaps
28	FUEL	
	00 – 2D14	General
	10 – 2D20	Storage
	20 – 2E10	Distribution
	40 – 2E14	Indicating
29	HYDRAULIC POWER	
	00 – 2E21	General
	10 – 2F19	Main

INTRODUCTION (cont.)

A. System/Chapter Index Guide (cont.)

SYSTEM/ CHAPTER	SUB-SYSTEM/ SECTION – GRID NUMBER	TITLE
30	ICE AND RAIN PROTECTION	
	00 – 2G19	General
	10 – 2H1	Airfoil
	30 – 2H17	Pitot and Static
	40 – 2H19	Windows, Windshields and Doors
	60 – 2H21	Propellers/Rotors
	80 – 2H23	Detection
32	LANDING GEAR	
	00 – 3A18	General
	10 – 3B4	Main Gear and Doors
	20 – 3B22	Nose Gear and Doors
	30 – 3C16	Extension and Retraction
	40 – 3C22	Wheels and Brakes
	60 – 3D18	Position and Warning
33	LIGHTS	
	00 – 3E2	General Compartment
	10 – 3E6	Flight Compartment
	40 – 3E8	Exterior
34	NAVIGATION AND PITOT/STATIC	
	00 – 3E14	General
	10 – 3E18	Flight Instrtuments Pitot/Static
	20 – 3E22	Attitude & Direction
	40 – 3F2	Independent Position Determining
35	OXYGEN	
	00 – 3F10	General
	10 – 3F12	Crew – Passenger
37	VACUUM	
	00 – 3G8	General
	10 – 3G12	Distribution
	20 – 3G16	Indicating

INTRODUCTION (cont.)

A. System/Chapter Index Guide (cont.)

SYSTEM/ CHAPTER	SUB-SYSTEM/ SECTION – GRID NUMBER	TITLE
39	ELECTRICAL / ELECTRONIC PANELS & MULTIPURPOSE PARTS	
	40 – 3G20	Multipurpose Elecrtical Parts
51	STRUCTURES	
	00 – 3G24	General
52	DOORS	
	00 – 3H16	General
	10 – 3H18	Passenger/Crew
	30 – 3I2	Cargo
55	STABILIZERS	
	10 – 3I6	Horizontal Stabilizers
	30 – 3I12	Vertical Stabilizer
	40 – 3I14	Rudder
56	WINDOWS	
	10 – 3I18	Flight Compartment
	20 – 3I20	Cabin
57	WINGS	
	00 – 3J2	General
	20 – 3J4	Auxiliary Structure
	40 – 3J6	Attach Fittings
	50 – 3J12	Flight Surfaces
61	PROPELLERS	
	10 – 3J20	Propeller Assembly
	20 – 3K6	Controlling
70	STANDARD PRACTICES - ENGINE	
	00 – 3K12	General
71	POWER PLANT	
	00 – 3K16	General
	10 – 3L6	Cowling

INTRODUCTION (cont.)

A. System/Chapter Index Guide (cont.)

SYSTEM/ CHAPTER	SUB-SYSTEM/ SECTION – GRID NUMBER	TITLE
73	ENGINE FUEL SYSTEMS	
	10 – 4A15	Distribution
	20 – 4A20	Controlling
74	IGNITION	
	00 – 4B3	General
	10 – 4B5	Electrical Power Supply
	20 – 4B22	Distribution
	30 – 4C7	Switching
77	ENGINE INDICATING	
	00 – 4C13	General
	10 – 4C13	Power
	20 – 4C16	Temperature
78	EXHAUST	
	00 – 4C23	General
79	OIL	
	20 – 4D7	Distribution
	30 – 4D7	Indicating
80	STARTING	
	00 – 4D11	General
	10 – 4D15	Cranking
81	TURBINES	
	20 – 4E1	Turbo-Supercharger
91	CHARTS & WIRING DIAGRAMS	
	00 – 4E16	General
	10 – 4F19	Electrical Schematics
95	SPECIAL PURPOSE EQUIPMENT	
	00 – 4J8	Special Purpose Equipment

– END –

GRIDS 4A9 THROUGH 4A12
INTENTIONALLY LEFT BLANK

CHAPTER

73

ENGINE FUEL SYSTEM

CHAPTER 73 - ENGINE FUEL SYSTEM

TABLE OF CONTENTS/EFFECTIVITY

CHAPTER SECTION	SUBJECT	GRID NO.	EFFECTIVITY
73-10-00	DISTRIBUTION	4A15	July 1, 1993
73-10-00	Fuel Injector Maintenance	4A15	July 1, 1993
73-10-00	Fuel - Air Bleed Nozzle (PA-32R-301)	4A15	July 1, 1993
73-10-00	Removal of Fuel - Air Bleed Nozzle (PA-32R-301)	4A15	July 1, 1993
73-10-00	Cleaning and Inspection of Fuel - Air Bleed Nozzle (PA-32R-301)	4A15	July 1, 1993
73-10-00	Fuel - Air Bleed Nozzle (PA-32R-301T)	4A16	July 1, 1993
73-10-00	Removal of Fuel - Air Bleed Nozzle (PA-32R-301T)	4A16	July 1, 1993
73-10-00	Cleaning and Inspection of Fuel - Air Bleed Nozzle (PA-32R-301T)	4A16	July 1, 1993
73-10-00	Installation of Fuel - Air Bleed Nozzle (PA-32R-301T)	4A16	July 1, 1993
73-10-00	Adjustment of Idle Speed and Mixture	4A19	July 1, 1993
73-20-00	CONTROLLING	4A20	July 1, 1993
73-20-00	Adjustment of Throttle and Mixture Controls	4A20	July 1, 1993

DISTRIBUTION.

FUEL INJECTOR MAINTENANCE.

1. In general, little attention is required between injector overhauls. However, it is recommended that the following items be checked during periodic inspection of the engine:
   a. Check tightness and lock of all nuts and screws which fasten the injector to the engine, torquing all nuts to 135-150 inch-pounds.
   b. Seat the pal type locknuts and finger tighten them against the plain nuts. After this has been done tighten the locknuts an additional 1/3 to 1/2 turn.
   c. Check all fuel lines for tightness and evidence of leakage. A slight fuel stain adjacent to the air bleed nozzles is not cause for concern.
   d. Check throttle and mixture control rod ends and levers for tightness and lock.
   e. Remove and clean the injector inlet strainer at the first 25 hours of operation and each 50 hour inspection thereafter. Check the screen for distortion or openings in the strainer. Replace for either of these conditions. Clean screen assembly in solvent and dry with compressed air. Damaged strainer O-rings should be replaced. To install the screen assembly, place the gasket on the screen assembly and install the assembly in the throttle body and tighten to 35-40 inch-pounds torque.

FUEL-AIR BLEED NOZZLE. (PA-32R-301)

REMOVAL OF FUEL-AIR BLEED NOZZLE. (PA-32R-301)

The nozzles must be carefully removed as they or the cylinders may be damaged.

1. Remove the lower engine cowl.
2. Disconnect the fuel line from the nozzle.
3. Carefully remove the nozzle, using the correct size deep socket.
4. Clean and inspect the nozzle as given in the next paragraph.

CLEANING AND INSPECTION OF FUEL-AIR BLEED NOZZLE. (PA-32R-301)

1. Clean the nozzle with acetone or equivalent and blow out all foreign particles with compressed air in the direction opposite that of fuel flow. Do not use wire or other hard objects to clean orifices. (Refer to latest revision of Lycoming Service Instruction No. 1275.)
2. Inspect the nozzle and cylinder threads for nicks, stripping or cross-threading.
3. Inspect for battered or rounded hexagons.
4. A test procedure for air bleed nozzles is described in latest revision of Lycoming Service Instruction No. 1275.

FUEL-AIR BLEED NOZZLE. (PA-32R-301T)

REMOVAL OF FUEL-AIR BLEED NOZZLE. (PA-32R-301T)

The nozzles must be carefully removed as they or the cylinders may be damaged.

1. Remove the lower engine cowl.
2. Disconnect the fuel line from the nozzle.
3. Remove the spring retainer and spring from the nozzle stem.
4. Disconnect the nozzle shroud from the vent hose and remove it from the nozzle.
5. Carefully remove the nozzle, using the correct size deep socket.

CLEANING AND INSPECTION OF FUEL-AIR BLEED NOZZLE. (PA-32R-301T)

1. Clean the nozzle with acetone or equivalent and blow out all foreign particles. Do not use wire or other hard objects to clean orifices. (Refer to latest revision of Lycoming Service Instruction No. 1275.)
2. Inspect and replace nozzle O-rings if found to be cracked, brittle or distorted.
3. A test procedure for air bleed nozzles is described on latest revision of Lycoming Service Instruction No. 1275.

INSTALLATION OF FUEL-AIR BLEED NOZZLE. (PA-32R-301T)

1. It is important for the nozzles to be correctly positioned with the bleed hole upward.

– CAUTION –

Start nozzles and line couplings by hand to prevent the possibility of cross-threading.

2. Install the nozzles and torque to 60 inch-pounds.
3. Ascertain that the O-rings are properly installed on the nozzle stem and install the nozzle shroud. (Refer to Figure 3.)
4. Connect the vent to the nozzle shroud.
5. Install the spring and spring retainer on the nozzle stem.
6. Connect the fuel line to the nozzle and clamp the fuel lines as described in latest revision of Lycoming Service Bulletin No. 335.
7. Install the engine cowl.

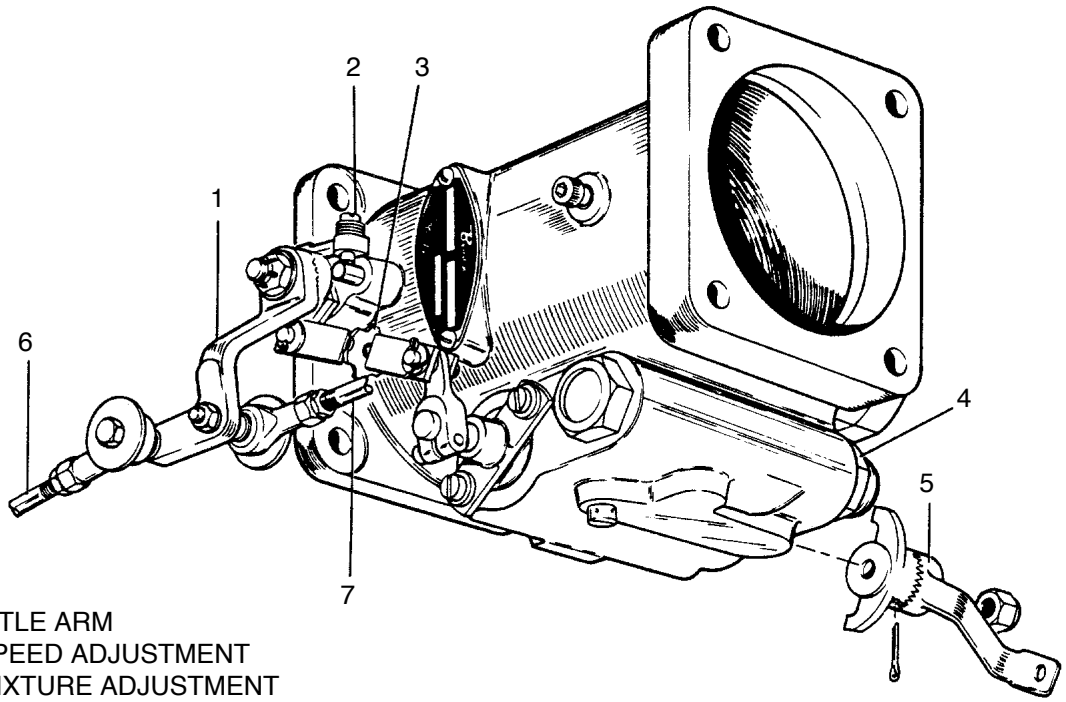

1. THROTTLE ARM
2. IDLE SPEED ADJUSTMENT
3. IDLE MIXTURE ADJUSTMENT
4. FUEL SCREEN
5. MIXTURE ARM
6. THROTTLE CONTROL CABLE
7. WASTE GATE INTERCONNECT

Fuel Injector
Figure 1

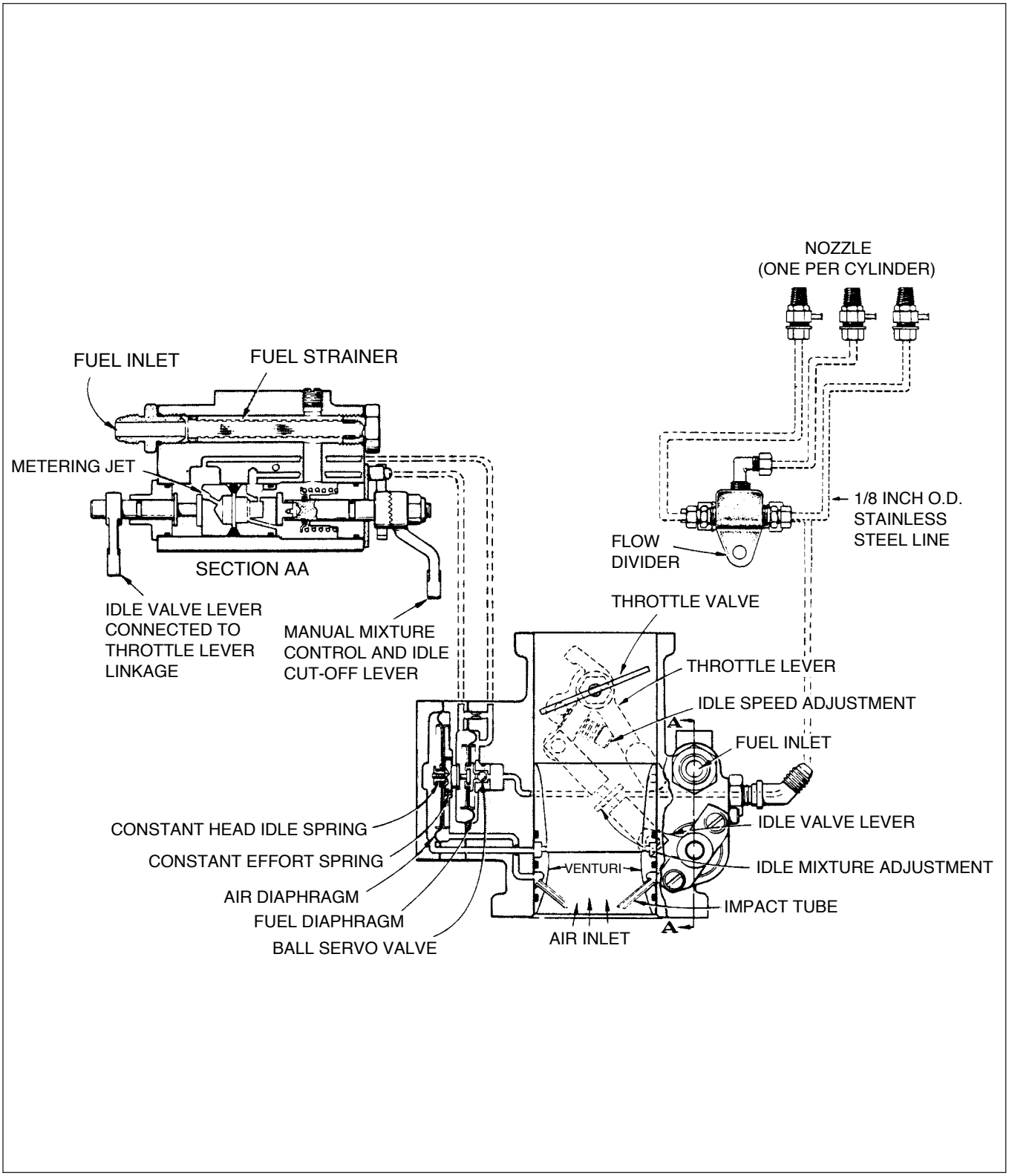

Schematic Diagram of RSA Fuel Injection System
Figure 2

ADJUSTMENT OF IDLE SPEED AND MIXTURE.

1. Start the engine and warm up in the usual manner until oil and cylinder head temperatures are normal.
2. Check magnetos. If the “mag-drop” is normal, proceed with idle adjustment.
3. Set throttle stop screw so that the engine idles at 550-600 RPM. If the RPM changes appreciably after making the mixture adjustment during the succeeding steps, readjust the idle speed to the desired RPM.
4. When the idling speed has been stabilized, move the cockpit mixture control lever with a smooth, steady pull toward the “Idle Cut-Off” position and observe the tachometer for any change during the leaning process. Caution must be exercised to return the mixture control to the “Full Rich” position before the RPM can drop to a point where the engine cuts out. An increase of more than 10 RPM while “leaning out” indicates an excessively rich idle mixture. An immediate decrease in RPM (if not preceded by a momentary increase) indicates the idle mixture is too lean.
5. If the above indicates that the idle adjustment is too rich or too lean, turn the idle mixture adjustment in the direction required for correction, and check this new position by repeating the above procedure. Make additional adjustments as necessary until a check results in a momentary pick-up of approximately 5 (never more than 10) RPM. Each time the adjustment is changed, the engine should be run up to 2000 RPM to clear the engine before proceeding with the RPM check. Make final adjustment of the idle speed adjustment to obtain the desired idling RPM with closed throttle. The above method aims at a setting that will obtain maximum RPM with minimum manifold pressure. In case the setting does not remain stable, check the idle linkage; any looseness in this linkage would cause erratic idling. In all cases, allowance should be made for the effect of weather conditions and field altitude upon idling adjustment.

– END –

CONTROLLING.

ADJUSTMENT OF THROTTLE AND MIXTURE CONTROLS. (Refer to Figure 4.)

Throttle and mixture controls are adjusted so that when the throttle arm on the fuel injector is rotated forward against its full throttle stop and the mixture control is rotated forward against its full rich stop, the cockpit control levers of the throttle and mixture should have 0.010 to 0.030 of an inch spring back on instrument panel stop when in full throttle or full rich position.

1. The throttle may be adjusted as follows:
   a. At the fuel injector, disconnect the clevis end of the throttle control cable from the control arm. Loosen the jam nut that secures the clevis end.
   b. Adjust the linkage by rotating the clevis end on the cable to obtain 0.010 to 0.030 of an inch spring back on instrument panel stop when in full throttle position.
   c. On aircraft equipped with air conditioning systems, a micro switch is located below the throttle control which is set to actuate in the full open position. With the throttle adjusted to obtain a clearance of .010 to .030, adjust the micro switch to actuate at this point also.
   d. Reconnect the clevis end to the control arm and safety.
2. The mixture may be adjusted as follows:
   a. At the fuel injector, disconnect the clevis end of the mixture control cable from the control arm. Loosen the jam nut that secures the clevis end.
   b. Adjust the linkage by rotating the clevis end on the cable to obtain 0.010 to 0.030 of an inch spring back on the instrument panel stop when in full rich position.
   c. Reconnect the clevis end to the control arm and safety.
3. Check security of cable casing attachments.
4. Pull the throttle and mixture levers in the cockpit full aft to ascertain that the idle screw contacts its stop and the mixture control arm contacts its lean position. A mixture control lock is incorporated in the quadrant cover which prevents the mixture control from being moved to the idle cutoff position inadvertently. The lock must be depressed before the control can be moved completely aft. Ascertain that the lock operates freely without any tendency to bind or hang up.

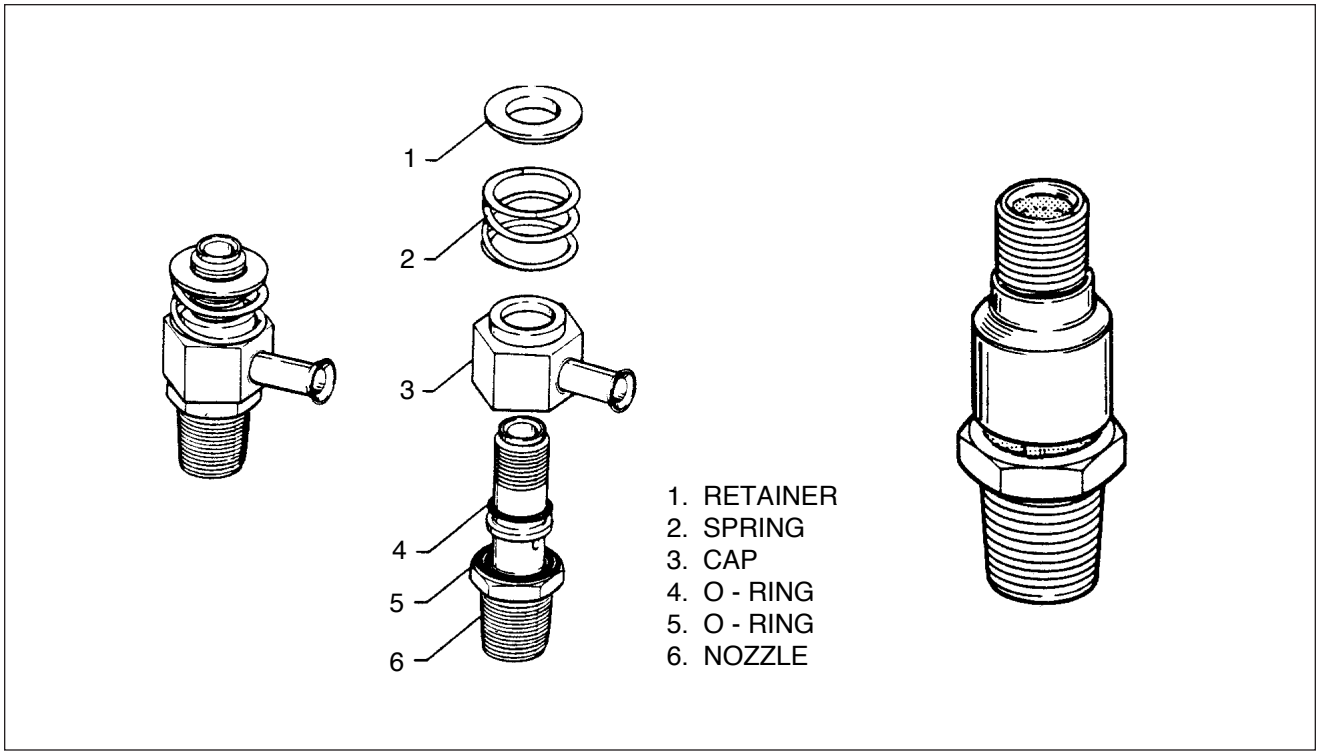

Fuel - Air Bleed Nozzle
Figure 3

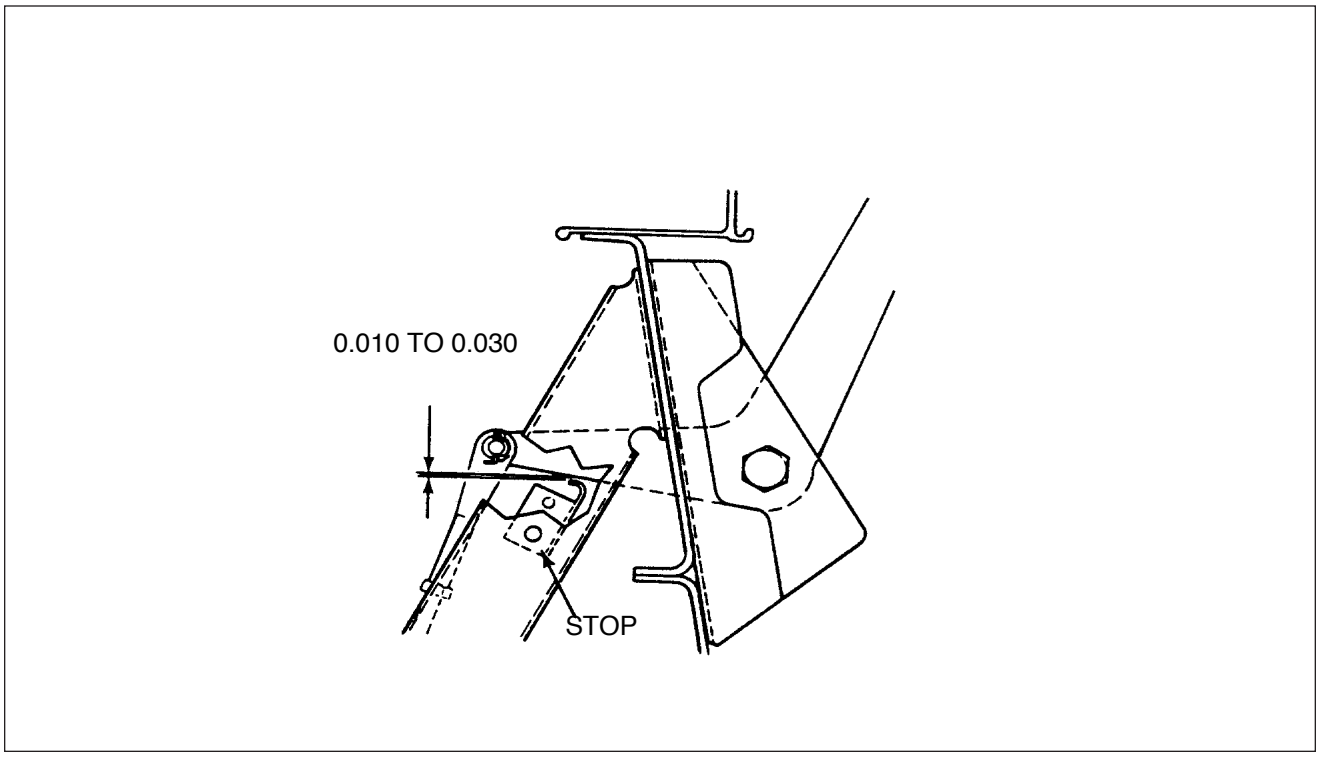

Adjustment of Engine Controls
Figure 4

THIS PAGE INTENTIONALLY LEFT BLANK

THIS PAGE INTENTIONALLY LEFT BLANK

THIS PAGE INTENTIONALLY LEFT BLANK

CHAPTER

74

IGNITION

CHAPTER 74 - IGNITION

TABLE OF CONTENTS/EFFECTIVITY

CHAPTER SECTION	SUBJECT	GRID NO.	EFFECTIVITY
74-00-00	GENERAL	4B3	July 1, 1993
74-00-00	Description and Operation	4B3	July 1, 1993
74-00-00	Troubleshooting	4B3	July 1, 1993
74-10-00	ELECTRICAL POWER SUPPLY	4B5	July 1, 1993
74-10-00	Magnetos	4B5	July 1, 1993
74-10-00	Inspection of Magneto	4B5	July 1, 1993
74-10-00	Magneto Installation and Timing Procedure (Timing Magneto to Engine)	4B7	July 1, 1993
74-10-00	Magneto Timing Procedure (Internal Timing)	4B12	July 1, 1993
74-10-00	Impulse Coupling Removal	4B15	July 1, 1993
74-10-00	Inspection of Impulse Coupling	4B15	July 1, 1993
74-10-00	Impulse Coupling Installation	4B19	July 1, 1993
74-20-00	DISTRIBUTION	4B22	July 1, 1993
74-20-00	Ignition Harness	4B22	July 1, 1993
74-20-00	Inspection of Harness	4B22	July 1, 1993
74-20-00	Maintenance of Harness	4B22	July 1, 1993
74-20-00	Spark Plugs	4C4	July 1, 1993
74-20-00	Removal of Spark Plugs	4C4	July 1, 1993
74-20-00	Inspection and Cleaning of Spark Plugs	4C6	July 1, 1993
74-20-00	Installation of Spark Plugs	4C6	July 1, 1993
74-30-00	SWITCHING	4C7	July 1, 1993
74-30-00	Ignition Switch	4C7	July 1, 1993
74-30-00	Removal of Ignition Switch	4C7	July 1, 1993
74-30-00	Installation of Ignition Switch	4C7	July 1, 1993

GENERAL.

DESCRIPTION AND OPERATION.

The Bendix D6LN-2031, D6LN-3000 and D6LN-3031 magnetos feature two electrically independent ignition circuits in one housing. A single four pole rotor provides the magnetic energy for both circuits. This magneto uses an impulse coupling to provide reliable ignition to engine cranking speed. A single cam operates the main breakers for both magneto circuits. Suppression of contact point arcing and conducted radio interference is accomplished by feed-thru capacitors which are mounted in the magneto cover which forms a part of the magneto harness assembly. At low engine cranking speeds the impulse coupling automatically retards the magneto until the engine is also at its retard firing position. The spring action of the impulse coupling is then released to spin the rotating magnet and produce the spark required to fire the engine. After the engine starts, the impulse coupling flyweights do not engage due to centrifugal action. The coupling then acts as a straight drive and the magneto fires at the normal firing position of the engine.

PA-32R-301 II HP aircraft use Slick 6350 and 6351 individual type magnetos. For service information please refer to the latest revision of Slick 4300/6300 Series Magneto Maintenance and Overhaul Manual (L-1363). This manual can be obtained by contacting Slick Aircraft Products, 530 Blackhawk Park Avenue, Rockford, Illinois, 61104.

– CAUTION –

Ascertain that the primary circuits of both engines are grounded before working on the engine.

TROUBLESHOOTING.

Troubles peculiar to the ignition system are listed in Chart 1 along with their probable causes and suggested remedies.

CHART 1
TROUBLESHOOTING (MAGNETO)

Trouble	Cause	Remedy
Failure of engine to start.	Defective spark plugs.	Clean and adjust or replace spark plugs.
	Defective ignition wire.	Check wire with electric tester. Replace defective wires.
	Defective battery.	Replace with charged battery.
	Improper operation of magneto breaker.	Check points. Check internal timing of magnetos.
Failure of engine to idle properly.	Faulty ignition system.	Check entire ignition system.
Low power and uneven running.	Defective spark plugs.	Clean and gap or replace spark plugs.
	Magneto breaker points not working properly.	Clean points. Check internal timing of magnetos.
	Defective ignition wire.	Check wire with electric tester. Replace defective wires.
	Defective spark plug terminal connectors.	Replace connectors on spark plug wire.
Failure of engine to develop full power.	Faulty ignition.	Tighten all connections. Check system with tester. Check ignition timing.

ELECTRICAL POWER SUPPLY.

MAGNETO.

INSPECTION OF MAGNETO.

After the first 50 hour period and every 100 hours thereafter, the magneto ignition system should be checked. If engine operating troubles develop which appear to be caused by the ignition system, it is advisable to check the spark plugs and wiring first before working on the magneto. Should trouble appear definitely associated with magneto, the most effective measure is to install a replacement magneto which is known to be in satisfactory condition and send the suspected unit to the overhaul shop for test and repair. Should this not be possible, a visual inspection of the following items may disclose the source of trouble.

1. Check the lead terminals for definite contact with spring contacts in outlets.
2. Remove the harness outlet cover from the magneto and inspect for the presence of moisture and carbon tracking due to moisture.
3. Check contact springs in distributor block for evidence of spark erosion.
4. Check height of contacts springs (0.422 maximum from top of block tower to spring). (Refer to Figure 2.)
5. With the cover and harness separated from the magneto housing, check contact assemblies to see that cam follower is securely riveted to its spring.
6. Examine the contact points for excessive wear or burning. Figure 1 shows how the average contact point will look when surfaces are separated for inspection.

– CAUTION –

Do not open point contacts more than .0625 of an inch for examination of contact surfaces. Excessive spreading of the breaker points will overstress and damage the contact spring.

Desired contact surfaces have a dull gray, sand-blasted (almost rough) or frosted appearance over the area where electrical contact is made. This means that points are worn in and mated to each other, thereby providing the best possible electrical contact and highest efficiency of performance. Minor irregularities or roughness of point surfaces are not harmful. (Refer to Figure 1, center.) Neither are small pits or mounds, if not too pronounced. If there is a possibility of pit becoming deep enough to penetrate pad (refer to Figure 1, right), reject contact assembly.

– NOTE –

No attempt should be made to stone or dress contact point. Should contact assembly have bad points or show excessive wear, the complete contact assembly should be replaced.

7. Check condition of cam follower felts for proper lubrication. If oil has migrated from one follower felt to another, it may be necessary to remove the lubrication from one felt strip while oiling another. If felt is overlubricated, remove oil by using a clean, lintless cloth. If dry, apply one or two drops of Bendix Breaker Felt Lubricant 10-86527.

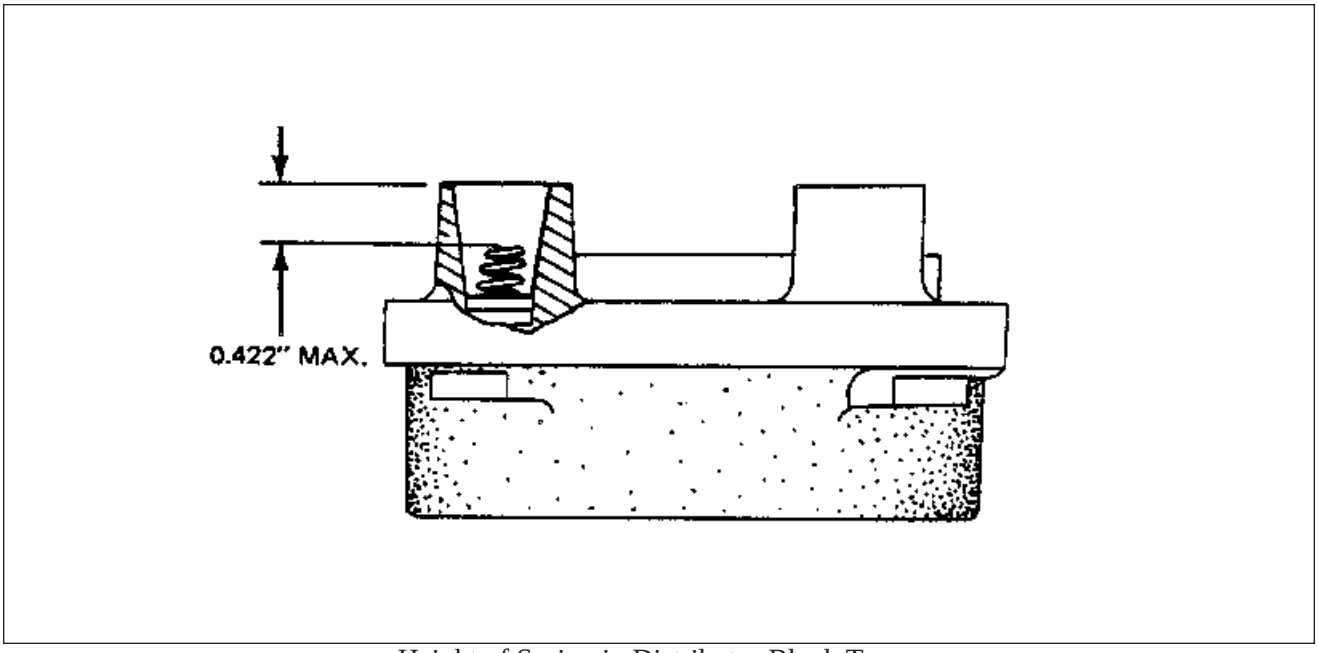

Height of Spring in Distributor Block Tower
Figure 1

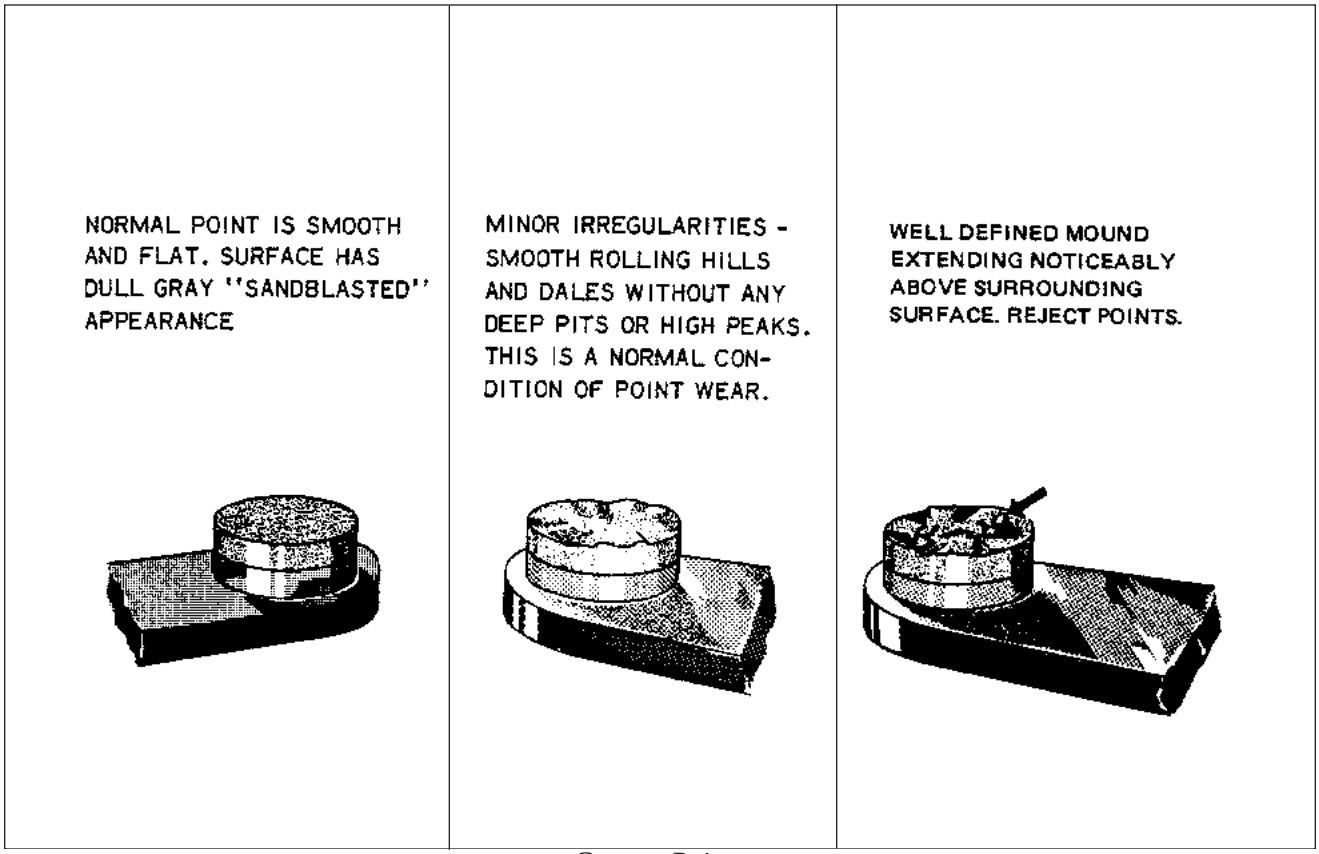

Contact Points
Figure 2

8. Check the capacitors for looseness in the magneto cover of the harness assembly and for any physical damage. Using a Bendix 11-1767-1, -2 or -3 condenser tester or equivalent, check capacitors for capacitance, series resistance and leakage. Capacitance shall be 0.34 to 0.41 microfarads.
9. Check magneto to engine timing per instructions given in the following paragraph.
10. Check action of impulse coupling. With the ignition switch off, observe breaker cam end of rotor while manually cranking the engine through a firing sequence. The rotor should alternately stop and then (with an audible snap) be rotated rapidly through a retard firing position. If impulse action is not correct, remove the magneto for overhaul.

MAGNETO INSTALLATION AND TIMING PROCEDURE (TIMING MAGNETO TO ENGINE).

1. Installation of the magneto to the engine may be accomplished without removal of the cover from the magneto. Also, the magneto cover has switch terminal outlets for the right and left sides of the magneto located in the center of the harness lead outlet sections of the cover.
2. The magneto incorporates a built-in pointer and a degree wheel with sufficient reference to assist the mechanic in magneto timing procedures. Printed upon the rotating magnet are marks to indicate magneto neutral and magneto "E" gap (8°). Refer to Figure 5. Also included are retard angle references of 15, 20 and 25 degrees. These marks are set up for either clockwise (R) or counterclockwise (L) rotation of the magneto as viewed from the magneto drive end. The timing tooth of the large distributor gear is marked with red paint. Refer to Figure 6.
3. When correctly timed internally, a magneto will have the timing teeth of the large distributor gears approximately centered in the timing windows. the R or L ("E" gap) mark on the rotor in alignment with the pointer and both main breaker points opening, all occurring simultaneously. These three references, "E" gap, painted teeth and point opening, are all used when timing the magneto to the engine.
4. Remove the spark plug from the No. 1 cylinder and turn the crankshaft in the direction of normal rotation until the compression stroke is reached.
5. Continue turning the crankshaft until the 20° advance timing mark is in alignment with the small hole located on the top face of the starter housing at the two o'clock position. (Refer to Figure 3.)
6. Install the magneto-to-engine gasket on the magneto flange.

– WARNING –

Do not attach harness spark plug ends to the spark plugs until all magneto-to-engine timing procedures and magneto to switch connections are entirely completed.

– NOTE –

The use of a timing light, unit Part No. 11-9110 or 11-9110-1 will simplify the timing procedure. This unit is available from the Bendix Corporation, Sidney, New York 13838.

It is recommended that short adapter leads be fabricated to facilitate connecting the timing light unit to the switch outlet terminals of the cover. (Refer to Figure 4.)

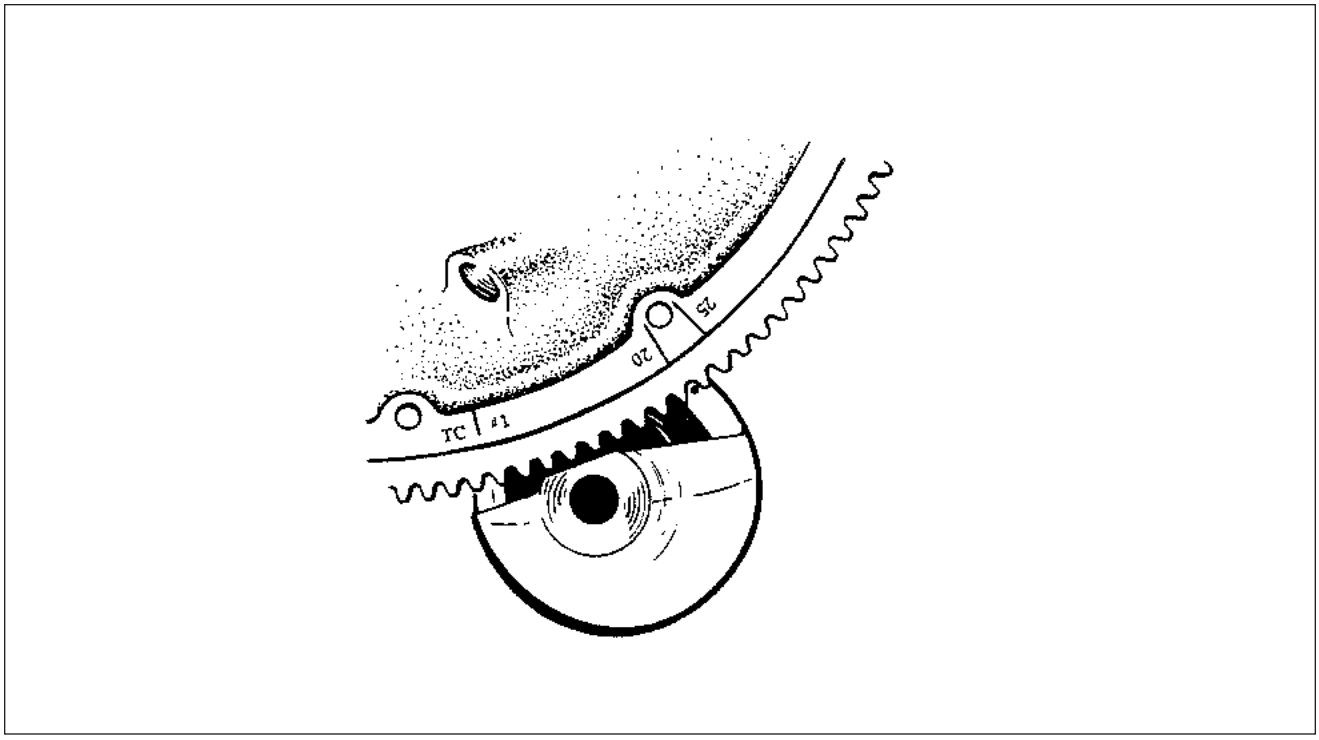

Engine Timing Marks
Figure 3

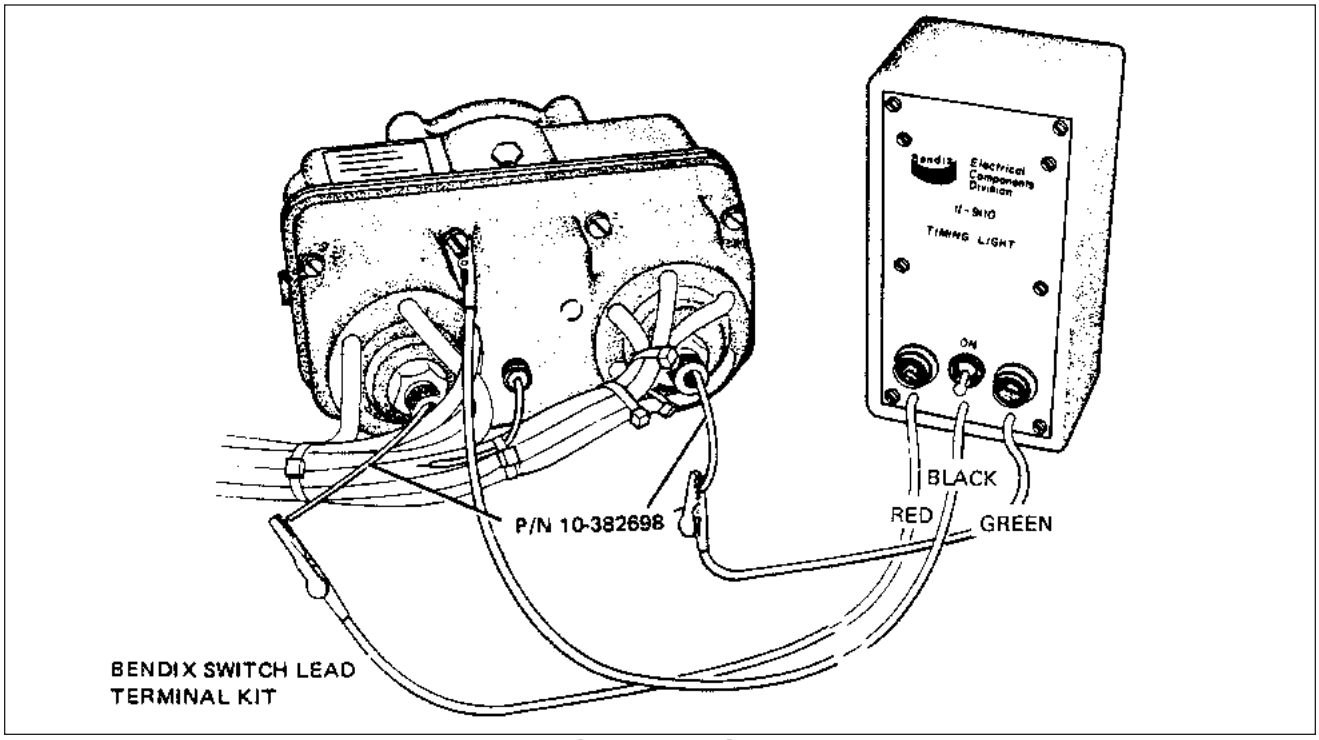

Timing Light Connected to Magneto
Figure 4

7. Remove the magneto drive gear backlash by turning the propeller opposite to normal rotation approximately 40° past the No. 1 firing position. Then turn the propeller in the direction of normal rotation up to the No. 1 firing position of 20° BTC.
8. Remove the timing window plug from the most convenient side of the magneto housing. Also, remove the plug from the rotor viewing window in the center of the housing.
9. Turn the rotating magnet drive shaft in the normal direction of magneto rotation until the red distributor tooth is centered in the timing hole. Also, check to ensure that the built-in pointer just ahead of the rotor viewing window aligns with the R or L mark on the rotor depending on whether the magneto is for right or left hand rotation as specified by the magneto data plate.
10. While holding the magneto in its No. 1 firing position (tooth in window center and pointer over R or L mark on rotor), install the magneto to the engine and loosely clamp in position.

– NOTE –

Engine should be in No. 1 firing position of 20° cylinder BTDC.

11. Attach red lead from the 11-9110 timing light to the left switch adapter lead, the green timing light lead to the right switch adapter lead and the black timing light lead to the magneto housing. (Refer to Figure 4.)

– NOTE –

An internal timing tolerance is allowed when adjusting the two main breakers. Therefore, one of the main breakers may open slightly before the other. Magneto-to-engine timing should be accomplished using the first main breaker to open as a reference point when the engine is in the firing position for the No. 1 cylinder. This will ensure that ignition created by either spark plug will not occur prior to the desired engine firing point.

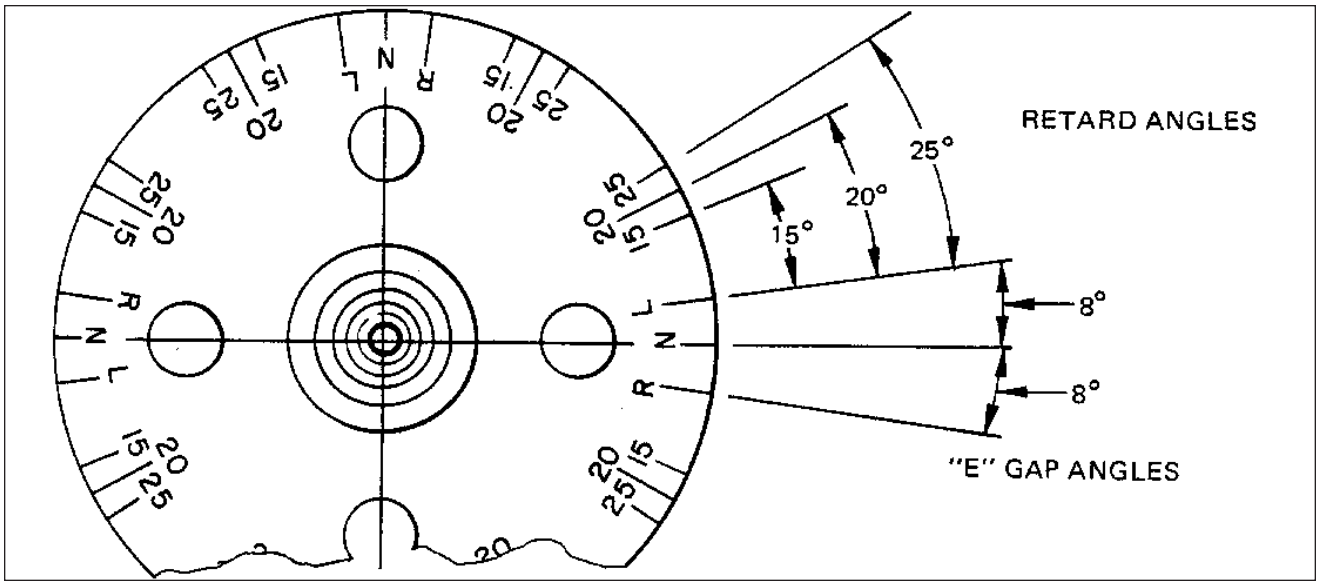

Timing Marks on Magneto Rotor
Figure 5

12. If both timing lights are ON (indicating breaker contacts are closed) proceed to step 13. If either or both are OFF, proceed as follows:
    a. Turn the entire magneto to the right until both timing lights are ON.
    b. Ensure that the red painted distributor gear tooth is still visible in the timing hole.
13. Rotate the entire magneto in the direction of rotor rotation until one of the timing lights just goes OFF. Then, evenly tighten the magneto mounting clamps.
14. Back the engine up approximately 10° and then carefully "bump" the engine forward while observing the timing lights.
15. At the No. 1 cylinder firing position the same timing light mentioned in step 13 should go OFF. Continue turning the engine in its normal direction of rotation until the other timing light goes OFF. This should not be more than 3 engine degrees later than the first light.
16. Repeat steps 12, 13 and 14 until the condition described in step 15 is obtained.
17. Complete tightening of the magneto securing clamps by torquing to 150 inch pounds.
18. Recheck timing once more and if satisfactory, disconnect the timing light and remove the adapter leads.
19. Reinstall plugs in timing inspection holes and torque to 12-15 inch pounds.
20. Loosely install the harness with clamps and / or brackets.

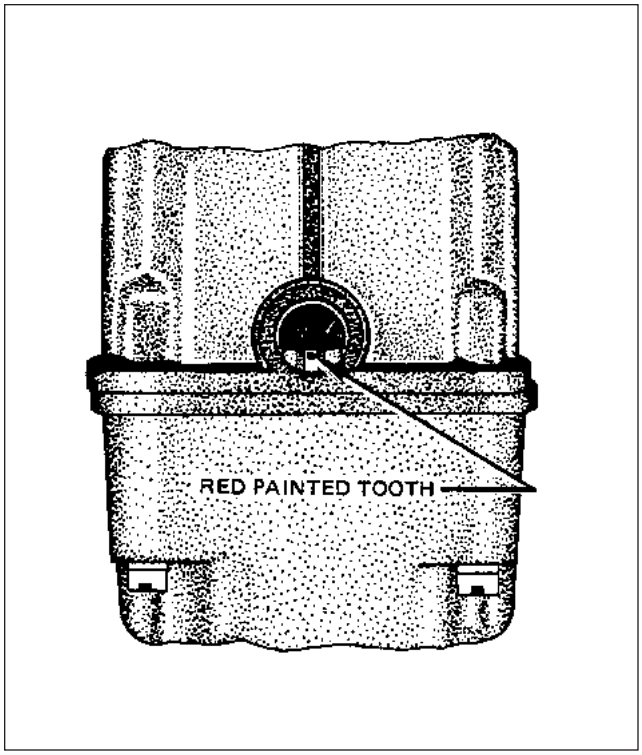

Painted Tooth Centered in Timing Window
Figure 6

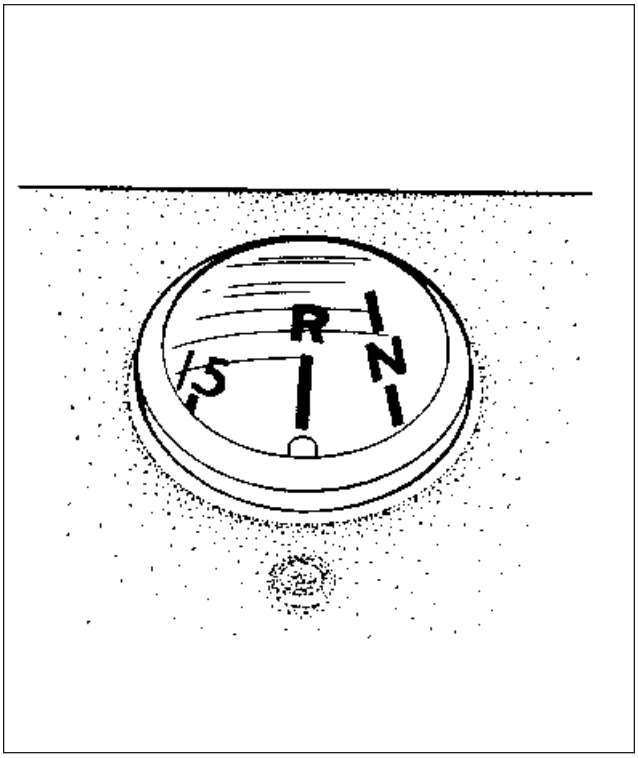

Timing Mark on Rotor Aligned with Pointer
Figure 7

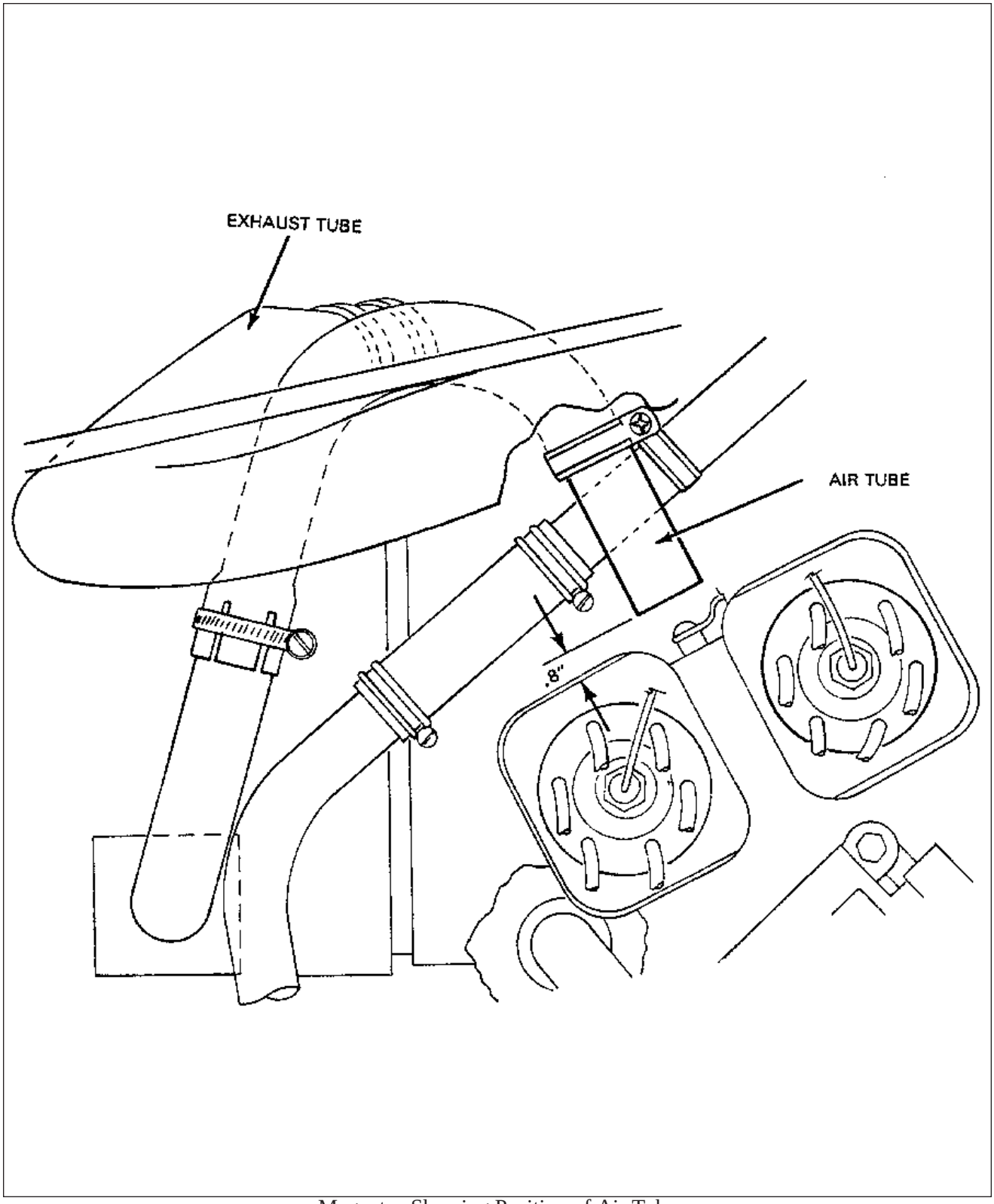

Magnetos Showing Position of Air Tube
Figure 8

MAGNETO TIMING PROCEDURE. (INTERNAL TIMING)

1. Remove magneto cover.
2. Loosen flange clamps and remove magneto from engine.
3. Check condition of points; replace if necessary.
4. Rotate the magneto drive shaft until a main cam lobe touches the follower of the left main breaker assembly and adjust the breaker points to an initial opening of .016 inch. Wire feeler gauge is recommended.
5. Adjust right main breaker contact assembly to an initial point opening of .016 inch just as in Step 4.
6. Fixed contact support may be bent to adjust clearance. If support is bent, main breaker contact must be rechecked. Torque breaker securing screws to 20-25 inch-pounds.

– NOTE –

Bend bracket carefully. Do not correct by bending back if bent too much; this weakens the bracket.

7. Position rotor so keyway is at 12 o'clock position and red painted distributor teeth are visible in timing windows.
8. Loosen drive shaft nut and position the Rotor Holding Tool (Bendix part number 11-8465) under washer or bushing on drive end of rotor shaft with clamp at 4 o'clock position so any shaft deflection caused by clamping action will be in a plane parallel to breaker contacts. Tighten nut to secure holding tool to shaft. Check to insure proper location of keyway and tighten adjusting screw of holding tool to lock rotor in position.
9. Loosen rotor holding tool and turn magneto in direction of rotation until adjacent "R"("E"gap) mark is aligned with pointer and lock in position. Both red painted teeth should be approximately centered in timing windows.

– NOTE –

The use of the timing light unit, part number 11-9110-1 available from Bendix will simplify the internal timing procedure and breaker synchronization.

10. Connect the timing light black lead to any unpainted surface of the magneto.
11. Connect the red timing light lead to the left breaker terminal and the green lead to the right main breaker terminal. (Refer to Figure 8a.)
12. Loosen rotor holding tool and move the rotor back a few degrees; then move it forward. Both lights should go out to indicate opening of the main breakers when the timing pointer is indicating within the width of the "R" mark and the red painted teeth are centered in timing windows.
13. If breaker timing is not correct, loosen cam securing screw (refer to Figure 9) and unseat main breaker cam from taper. Using 11-3031 Retaining Ring Pliers inserted in holes in cam, rotate main breaker cam in direction of rotation until left main breaker pointsj ust open and press cam onto taper. Tighten screw to seat main breaker cam.
14. Loosen rotor holding tool to turn rotating magnet back a few degrees; then turn rotating magnet in normal direction of rotation. Timing light should go out when timing pointer is aligned with "R" ("E" gap) mark. Lock rotating magnet in position where points just open.

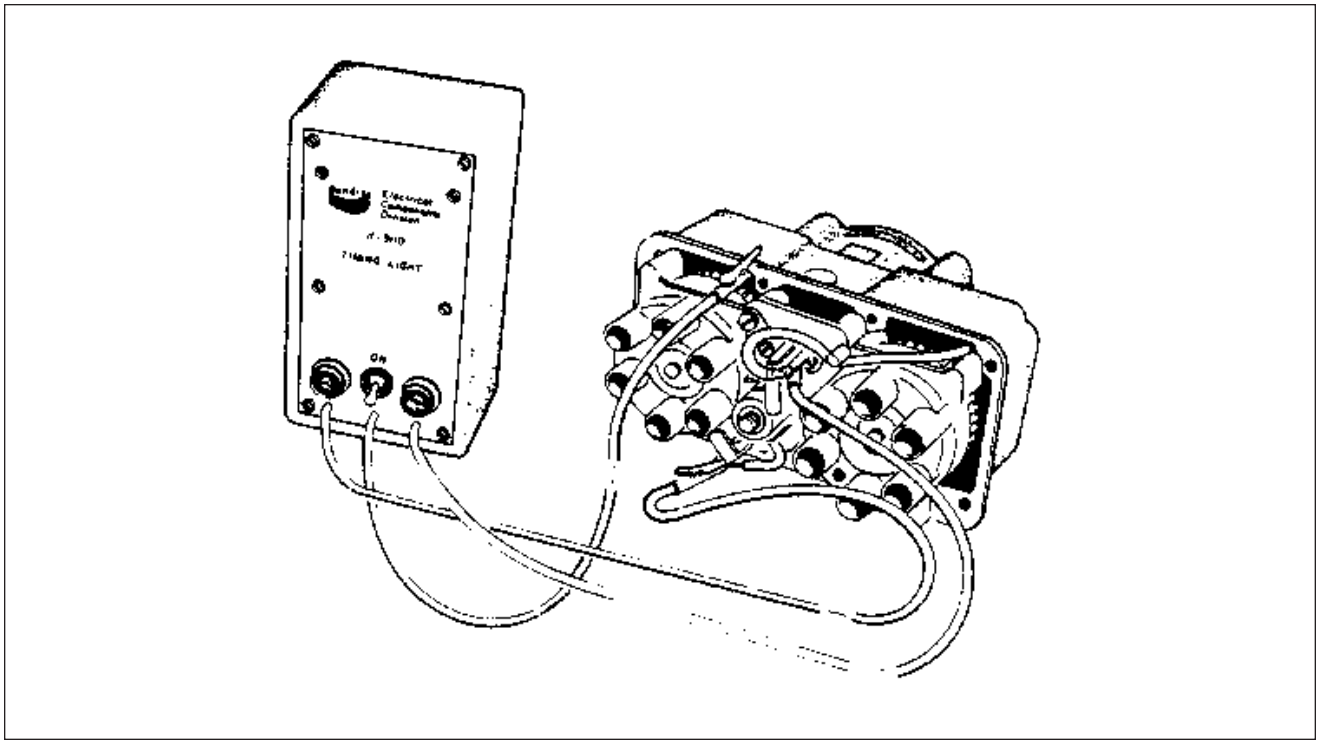

Timing Light Connected to Magneto and Breakers
Figure 8a

15. Loosen right main breaker securing screws and position breaker so cam follower is pressed against cam with points closed. Tighten contact assembly securing screws to prevent contact assembly from bouncing back when moved. Using a small mallet and drift, tap right breaker in until points just open.
16. Turn rotating magnet back a few degrees; then turn rotating magnet in normal direction of rotation. Both timing lights should go out within one degree or half the width of “R” mark on rotor. If breakers are not properly synchronized, reset right breaker.
17. Check right main breaker contact for 0.016 ± .004 inch point opening and torque right breaker contact securing screws to 20-25 inch-pounds. If point opening is out of limits, repeat timing procedure setting left main breaker opening at .016 ± .002 inch. If right contacts open beyond .020 inch, set left contacts closer to .018 inch. If right contacts open less than .012 inch, set left contacts closer to .014 inch.
18. Using timing light, recheck timing to insure main breaker open within one-half the width of ”R” mark and that retard breaker opens at correct degree setting. Using a wire feeler gauge, check left main breaker for .016 ± .002 inch point opening and right main breaker and retard breaker for .016 ± .004 inch point opening.

– NOTE –

If correct breaker timing cannot be achieved, remove magneto and have it overhauled.

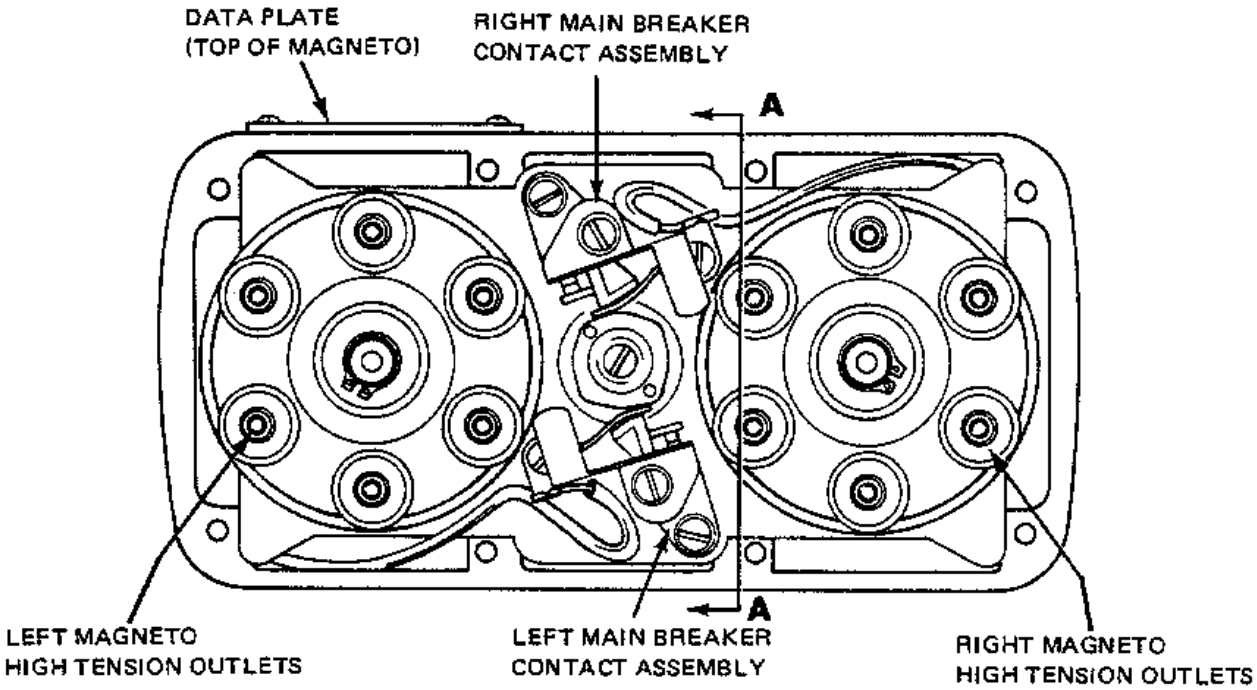

1. RIGHT MAIN CONTACT ASSEMBLY
2. LEFT MAIN CONTACT ASSEMBLY
3. SCREW
4. LOCK WASHER
5. FLAT WASHER
6. MAIN CAM

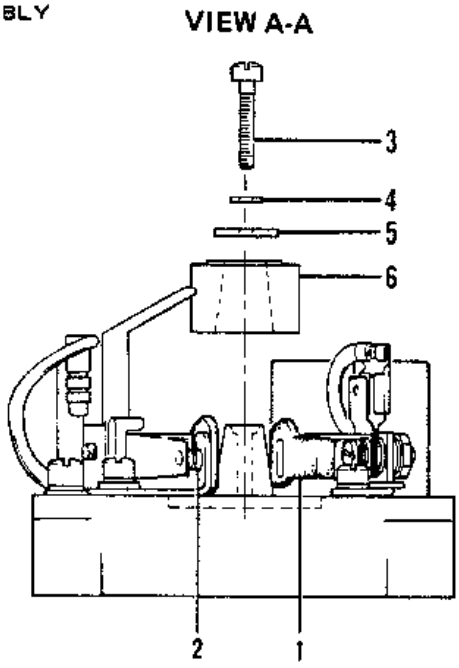

Cam End View of Magneto
Figure 9

19. Check capacitors for looseness in the magneto cover of the harness assembly and for any physical damage. The capacitors should be checked for capacitance, series resistance and leakage. Capacitance should be 0.34 to 0.41 microfarads. The use of a Bendix condenser tester, part number 11-1767-1, -2 or -3 or equivalent will simplify this test. Replace defective capacitors and torque securing nut to 60-70 inch-pounds.

– NOTE –

Spring in capacitor outlet may cause an indication of a short to ground if adapter lead is not used. (Refer to Figure 4.)

IMPULSE COUPLING REMOVAL.

1. Using heavy gloves or shop cloth, grasp the coupling body firmly to prevent the internal spring from unwinding suddenly. Pull outward on the coupling body only enough to release it from the cam assembly. Keep the coupling body close against the cam and allow the body to turn as the spring unwinds. After one or two turns, the spring coils will wedge against the projections on the body, restraining the spring from further unwinding.
2. Look into the hole in body and note the location of the inner eye of spring where it engages with mating recess in cam hub. Insert a screwdriver under spring end and pry spring eye out of recess. Remove the body and spring together. Uncoil spring from body and pry spring eye from body recess to disengage spring.
3. Thread protective cap of 11-702-1 puller securely on end of shaft. Engage puller over protective cap and cam assembly with wide jaws of puller hooked under cam assembly as shown in Figure 10.
4. Tighten puller handle to remove coupling from shaft. If coupling does not release with maximum hand torque at puller handle, apply penetrating thread release compound between coupling and shaft. Then while puller is still fully tightened, hold tip of hot heavy duty soldering iron in contact with hub of coupling cam assembly. Solder wetting of the tip at point of contact with the cam hub will assist in heat transfer to the parts. Retighten puller after about a minute of heat application.

– CAUTION –

Do not strike the puller with a hammer. If puller is struck with a hammer the main bearings must be replaced.

5. Do not tighten puller handle further after coupling cam releases from the shaft. This could damage the flyweight if the flyweight is caught under the woodruff key. Remove the puller from the shaft. Then while holding both flyweight tips inward, lift cam from the shaft, and remove woodruff key from rotor shaft.

INSPECTION OF IMPULSE COUPLING.

1. Check clearance between each flyweight and each stop pin by the following method:
   a. Bend the end of a stiff piece of wire into a right angle, 1/8 inch long maximum.
   b. Hold the magneto as shown in Figure 11. Pull the heel of the flyweight outward with the fabricated hooked wire and make certain that a feeler gauge of 0.015 of an inch minimum thickness will pass between the stop pin and the highest point of the flyweight.

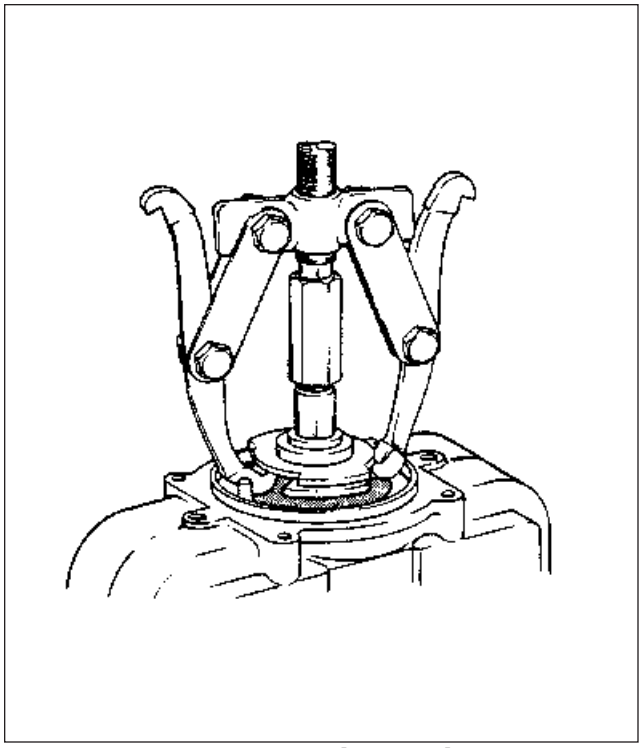

Removing Impulse Coupling
Figure 10

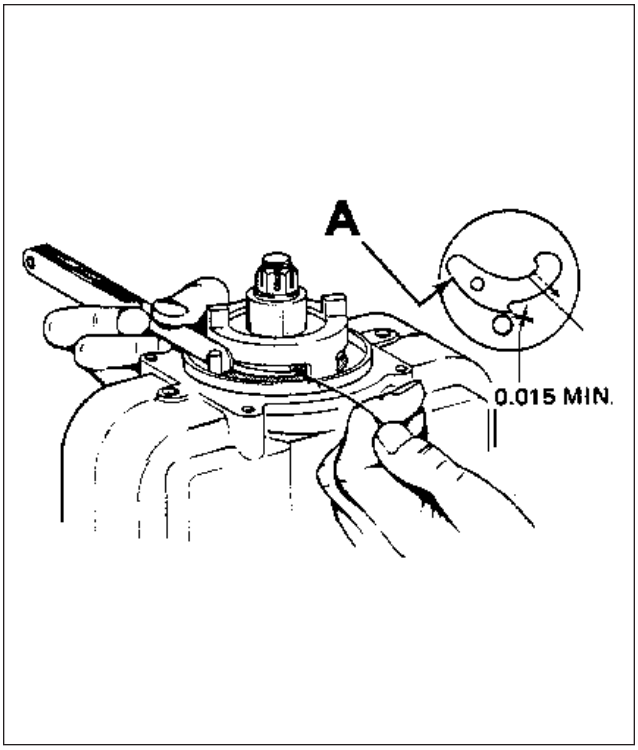

Checking Flyweight to Stop Pin Clearance
Figure 11

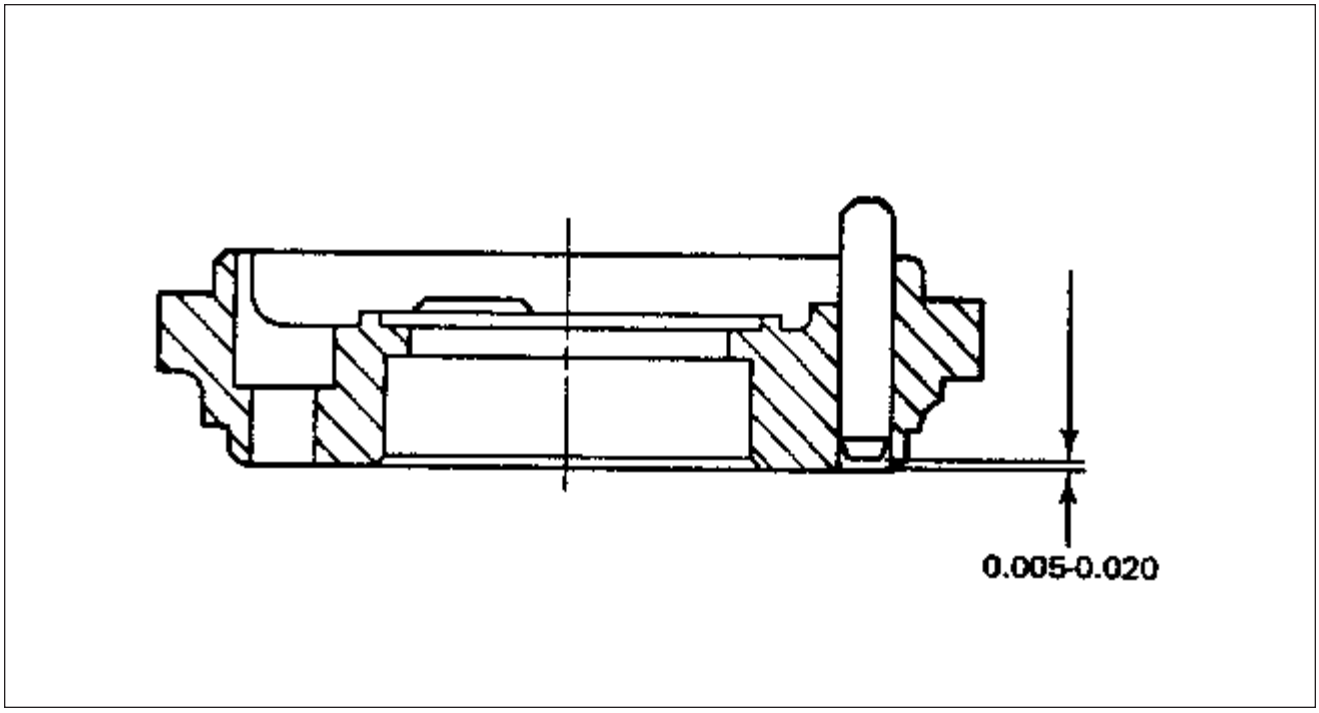

Stop Pin Installation Dimension
Figure 12

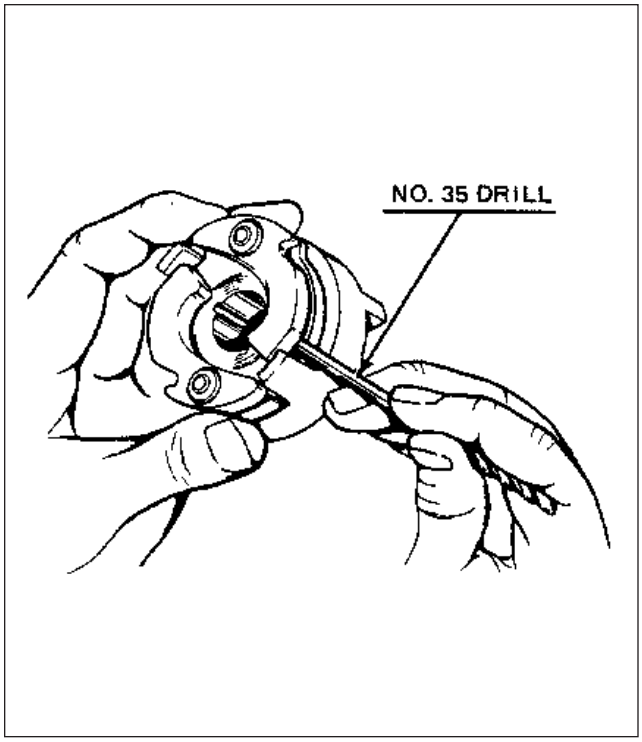

Checking Flyweight Axial Wear with Drill Shank
Figure 13

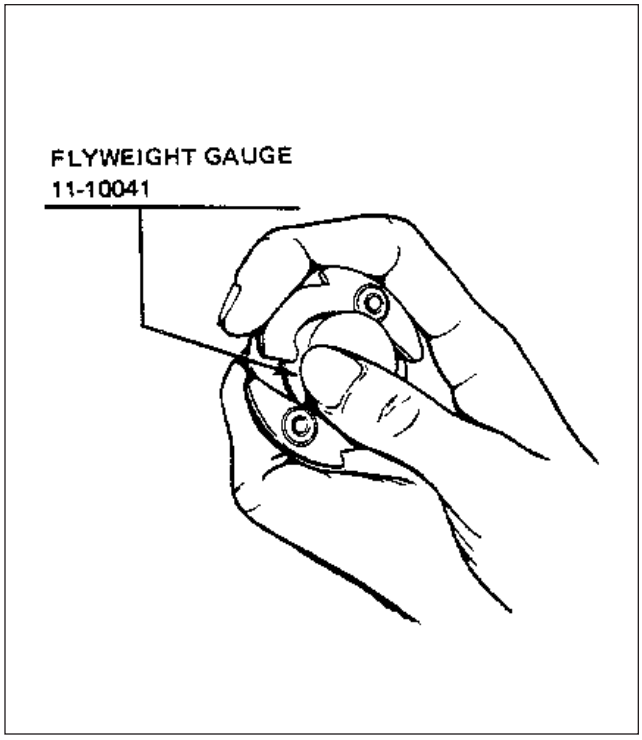

Checking Flyweight Radial Wear with Gauge
Figure 14

– NOTE –

A true and accurate check of the clearance between the flyweights and stop pins can only be obtained by pulling the flyweight outward as described. Do not attempt the check by pushing in on the flyweight at point "A" of Figure 11.

2. Inspect impulse coupling stop pins for damage. If pins are bent, damaged or excessively worn, remove pins using a suitable drift and arbor press. Press new pins into flange until dimension shown in Figure 12 is obtained.
3. Visually inspect flyweight securing washers and flyweights, particularly in area around the axle hole for cracks. Grip washers with pliers and exert moderate turning force to check looseness. If washer moves or any cracks are found, reject cam assembly.
4. Inspect for axial wear between flyweight and axle using shank of a new No. 35 drill as a gauge. Hold flyweight so the outer radius is in alignment with the rim of the cam flange and try to insert the drill shank between the flange and flyweight as shown in Figure 14. Do not force the drill. If the drill can be inserted, replace the cam assembly.

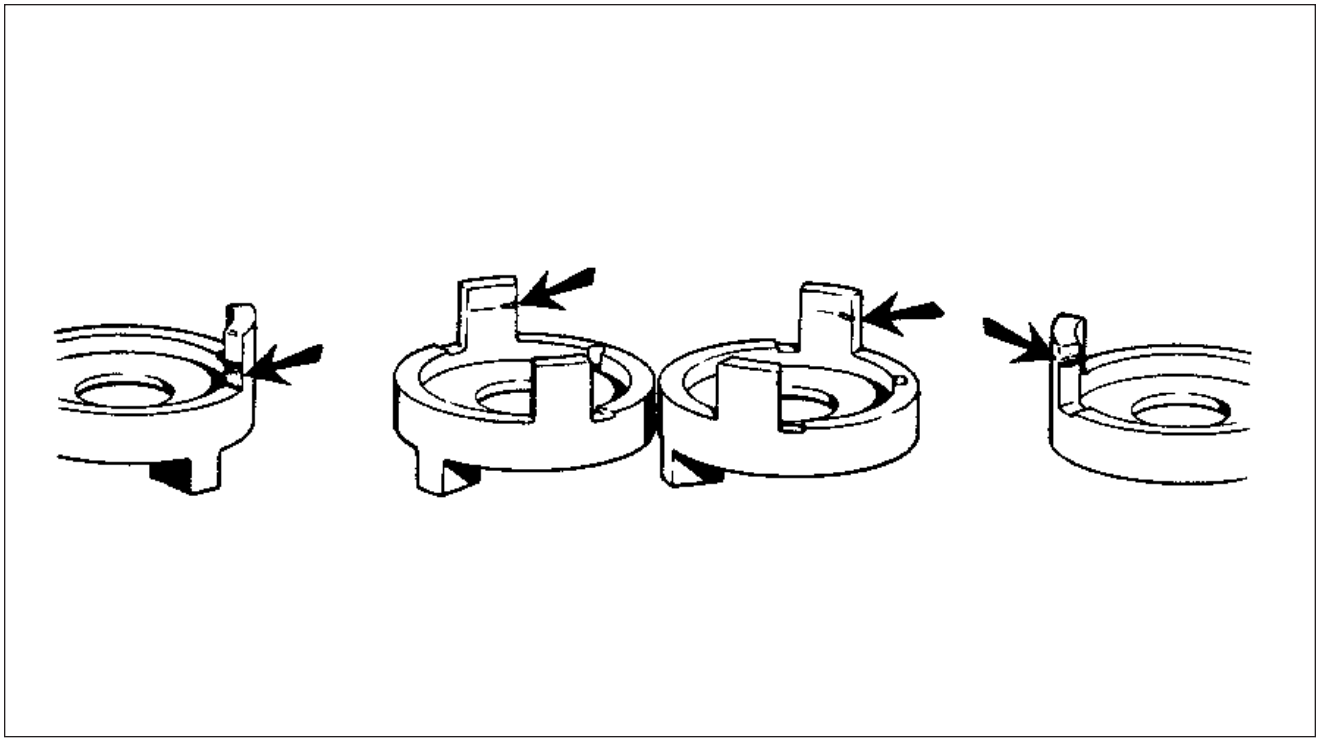

Points of Coupling Body Wear
Figure 15

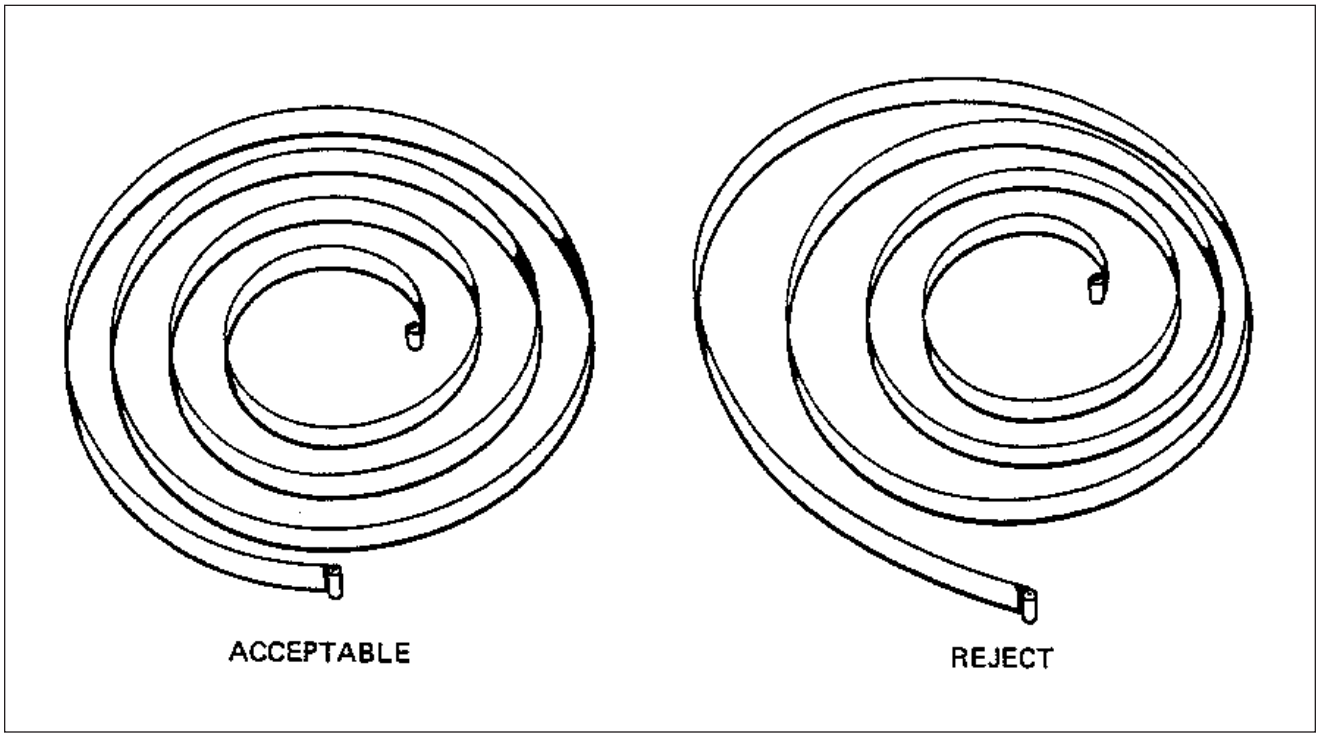

Acceptable and Deformed Coupling Springs
Figure 16

5. Inspect for excess radial wear between the flyweight and axle using the 11-10041 flyweight gauge. Insert the gauge between flyweights and against cam hub as shown in Figure 14. If the gauge cannot be inserted easily, remove burr from edges of hub keyway with a small file. Hold the gauge firmly against the hub, at the same time squeezing the flyweights against the gauge. If the inner end of either flyweight heel touches the gauge, replace the cam assembly. If parts are near limits, check clearance between flyweight and gauge with a .003 inch feeler. If flyweight heel is tight on feeler, replace the cam assembly.

– CAUTION –

Never attempt to repair any part of a rejected cam and flyweight assembly.

6. Inspect ears of the coupling body for grooves worn by the tail of the flyweights and wear at the triggering ramp and cam stop contact areas. (Refer to Figure 15.) If either ear shows a perceptible groove or a ridge can be felt when fingernail is drawn across the surface, replace the coupling body.
7. Inspect drive lugs of body. If wear is noted, measure difference between worn and unworn areas on drive lug surface. If difference is in excess of .015 of an inch, replace the body.
8. With spring released and free, it should form a smooth spiral curve with no sharp bends or flat spots. (Refer to Figure 16.) If spring is deformed, replace it.
9. Inspect spring for cracks particularly at the ends and around spring eyes. Inspect coils of spring for excessive wear. If grooves or ridges and worn in coils or cracks are found, replace spring.
10. Inspect the housing for cracks, stripped threads or other damage. Replace if necessary.

IMPULSE COUPLING INSTALLATION.

1. Check mating cam assembly and body for magnetization which would prevent flyweights from engaging. Hold the assembly as shown in Figure 17 and push upper flyweight against body. When released, flyweight must drop down. If flyweight sticks to body, parts are magnetized and coupling may not function. Perform test on both flyweights.
2. To demagnetize, place body over shaft of a charged rotating magnet and spin body rapidly by hand. While body is still spinning, invert magnet so body falls off. Catch body in hand and repeat test for magnetization.
3. Clamp one drive lug of the body in a padded jaw vise with the spring recess side up.
4. Orient the spring with the body for correct rotation. On clockwise couplings, the spring must coil in a clockwise direction from the outside toward the center when viewed from the spring recess side of the body. (Refer to Figure 18.) Insert eye of outer end of spring into hole drilled in inner rim of body.
5. Using heavy gloves to protect the hands, wind spring into body manually, lifting spring coils one at a time over projections on body. Extreme care should be used to avoid scratching or nicking the spring. After winding the spring, brush a coating of light oil over the spring coils.
6. Pry up one and one-half turns at the inner end of the spring with a small screwdriver and support in position as shown in Figure 19.
7. Engage recess in the hub on the cam assembly with eye at inner end of spring. With eye engaged, rotate cam assembly slightly in direction to unwind spring to permit hub of cam to slip into the inner turn of the spring. Rotate the cam in the opposite direction, winding spring slightly, until projections on edge of cam clear over the projections on the body. Push the cam assembly down into the body, at the same time taking the screwdriver out.

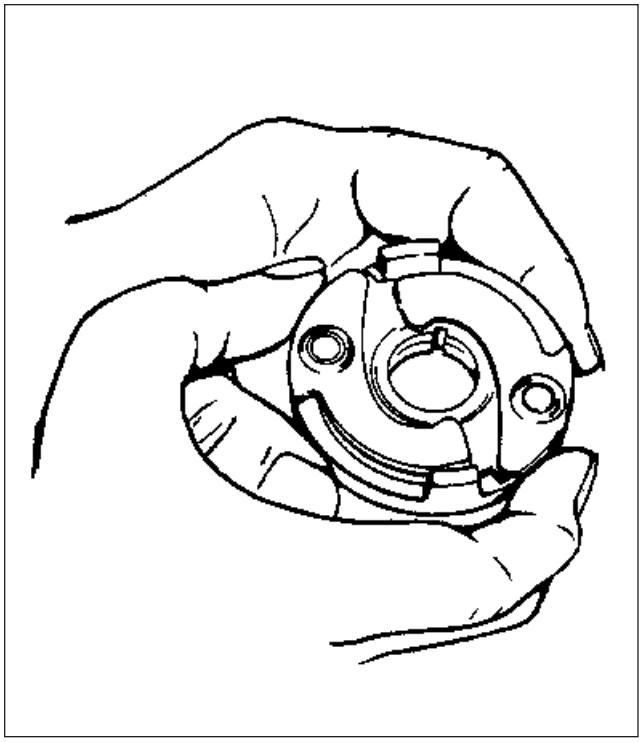

Checking Impulse Coupling for Magnetization
Figure 17

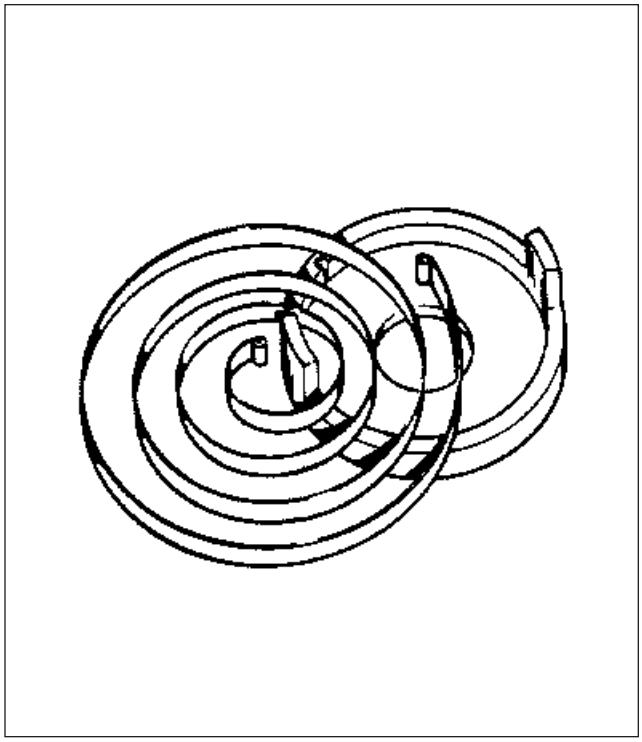

Orientation of Spring in Coupling Body
Figure 18

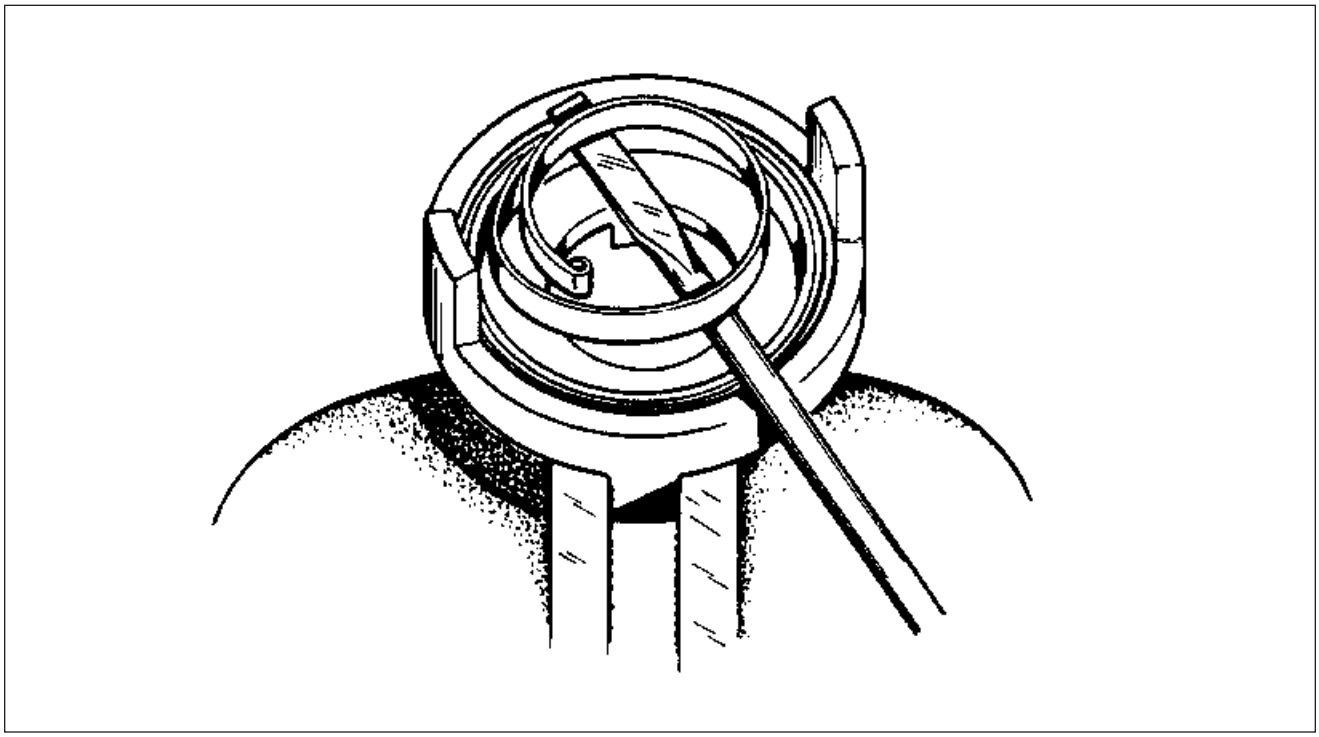

Lifting Inner End of Spring
Figure 19

8. Insert a spare rotating magnet, with woodruff key in taper, into cam assembly. Turn magnet slightly in direction of coupling rotation (to wind spring). Lift magnet with cam only enough to clear projections on the body. Wind spring one-half turn and re-engage the cam assembly into the body.
9. Tension of the spring assembly in the assembled coupling when wound to point of impulse tripping must not be less than 9 or more than 15 inch-pounds.

– END –

DISTRIBUTION.

IGNITION HARNESS.

INSPECTION OF HARNESS.

1. Inspect cover for cracks or other damage. Inspect lead assemblies for abrasions, mutilated braid or other physical damage.
2. Inspect grommets for tears and eyelets for spark erosion.
3. Disconnect harness coupling nuts from the spark plugs and extract the lead terminations. Inspect contact springs and compression springs for any damage or distortion. Inspect sleeves for cracks or carbon tracking.
4. Inspect coupling nuts and elbow assemblies for damaged threads or other defects.

– NOTE –

Replace any damaged components per instructions given in paragraph titled Maintenance of Harness.

5. Test continuity of each harness lead using a High Tension Lead Tester, Part No. 11-8888 or 11-8888-1 from Bendix as follows:
   a. Connect black test lead to contact spring and red lead to eyelet of the same lead. (Refer to Figure 20.)
   b. Observe that the continuity lamp illuminates.
6. Test insulation resistance of each harness lead by using the 11-8888 or 11-8888-1 tester as follows:
   a. Attach the red high voltage test lead to contact spring of harness lead. (Refer to Figure 21.)
   b. Attach the black test lead to the ferrule of the same harness lead. (Refer to Figure 21.)
   c. Depress PRESS-TO-TEST pushbutton switch.
   d. Observe that indicator lamp flashes and GAP fires simultaneously as long as the PRESS-TO-TEST switch is held depressed. Whenever indicator lamp flashes and GAP fails to fire, lead under test is defective and must be replaced.

MAINTENANCE OF HARNESS.

Minor repairs of the harness assembly, such as replacement of contact springs, sleeves, compression springs, eyelets or grommets can be accomplished with the harness mounted on the engine. Lead assemblies may also be replaced with harness mounted on the engine unless inaccessibility of installation or number of leads to be replaced makes it unreasonable.

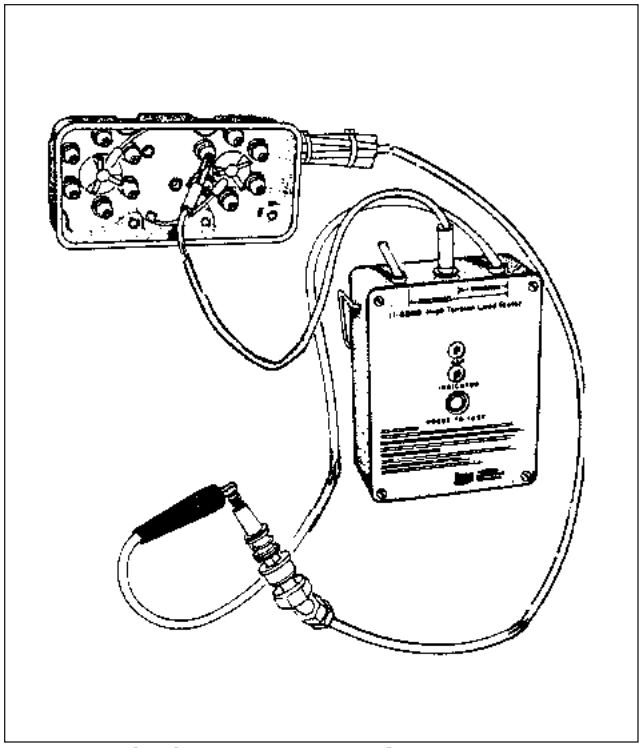

Checking Harness Lead Continuity
Figure 20

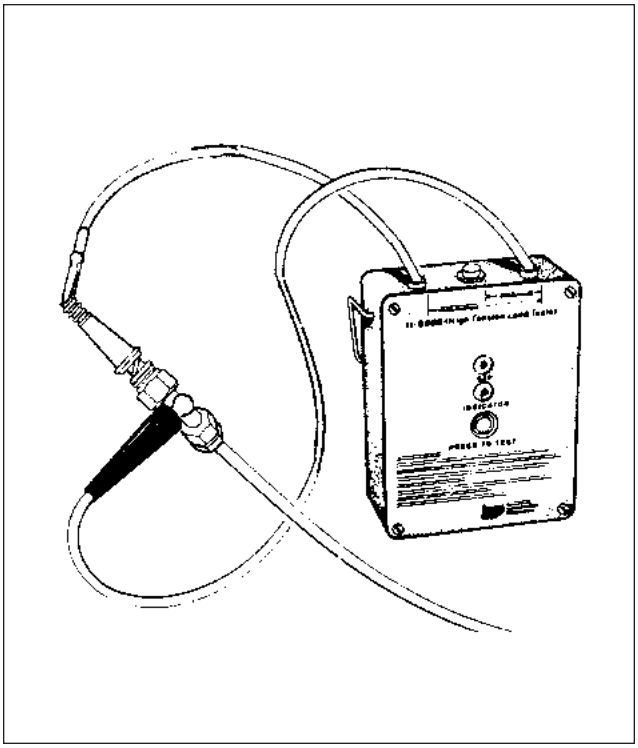

Checking Harness Lead Insulation Resistance
Figure 21

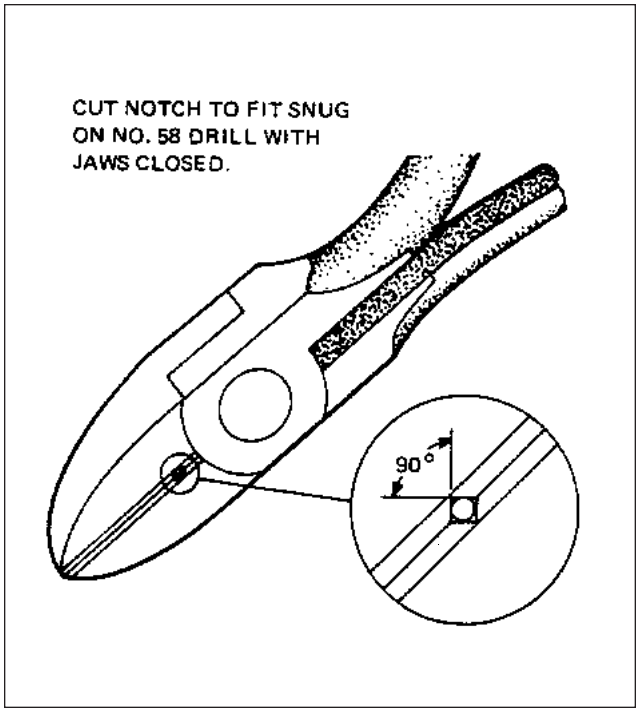

Modified Pliers
Figure 22

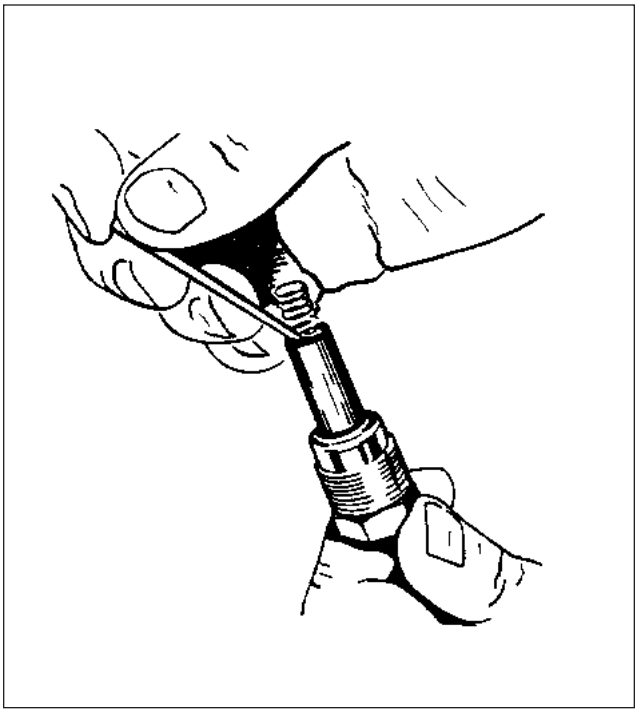

Removing Spring from Lead Assembly
Figure 23

To replace grommets or eyelets, pull the conductor through the shielding sufficiently to make eyelet accessible. Remove the eyelet being careful not to damage conductor wire. Replace grommet and eyelet using the "AB" groove of Crimping Tool No. 11-4152 or a pair of diagonal pliers modified as shown in Figure 22. Work the wire back into the shielding so the grommet fits properly against the ferrules in the plate. Slack in shielding or wire can be removed by grasping the lead in one hand and sliding the other hand firmly along the lead towards the magneto cover.

To replace contact springs, insulating sleeves, compression spring or elbows, proceed as follows:

1. Using a Bendix 11-7073 needle or a mechanical pencil with the lead retracted, hook the end of the contact spring as shown in Figure 23.
2. Using the needle or pencil, unscrew the spring.
3. Slide insulating sleeve and spring retainer assembly off end of lead assembly.
4. Replace defective component and reassemble as follows:
   a. Fabricate a tool as shown in Figure 24 for installing the insulating sleeves over cable terminals.
   b. Slide elbow assembly over lead and attach nut finger tight to ferrule.
   c. Push the fabricated tool through insulating sleeve and spring retainer assembly as shown in Figure 25. Screw the cable terminal into the tool.
   d. Work insulating sleeve and spring retainer assembly into position over the cable and unscrew the tool. Install contact spring on cable terminal.

– NOTE –

It may be necessary to lubricate the cable and insulating sleeve with a thin film of DC-200 (200,000 centistokes) or commercial grade alcohol to facilitate assembly.

5. To replace one of the lead assemblies, proceed as follows:
   a. Remove clamps and brackets from defective lead assembly. Cut cable ties from assembly and discard .
   b. Cut the eyelet from the lead and remove grommet.
   c. Grip the ferrule of the lead with a pair of vise grip or water pump pliers and with a twist-pull action remove the ferrule from the cover and discard ferrule. Pull lead from cover.
   d. Thread pre-stripped end of replacement lead through cover.

– NOTE –

Replacement leads are available from Bendix in lengths of 17 thru 74 inches in 3 inch increments. Use nearest next longer length to replace defective lead.

   e. Scrape blue coating being careful not to cut braid for .50 of an inch from end of lead.

– CAUTION –

New ferrules must be used and inserted under the braid exactly as stated in Step F.

   f. Push back braid and thread a new ferrule over wire and under braid until braid just covers knurling. (Refer to Figure 26.)

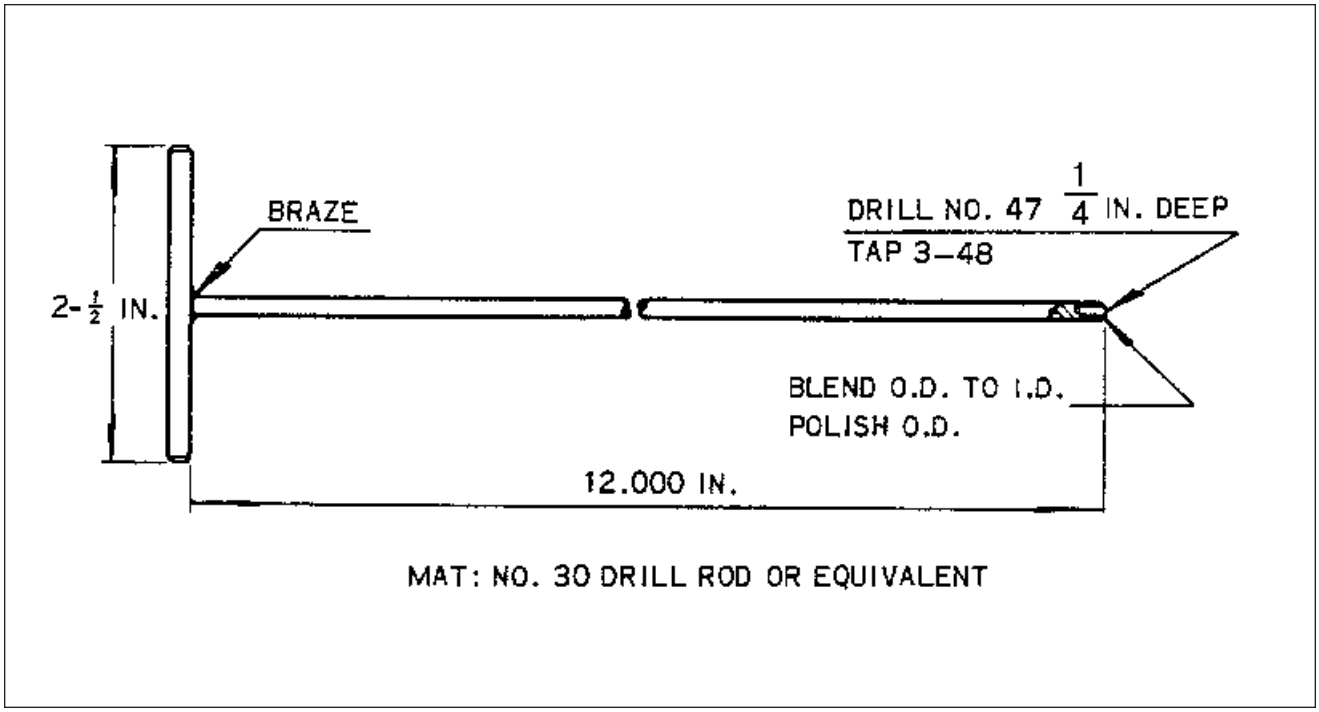

Assembly Tool
Figure 24

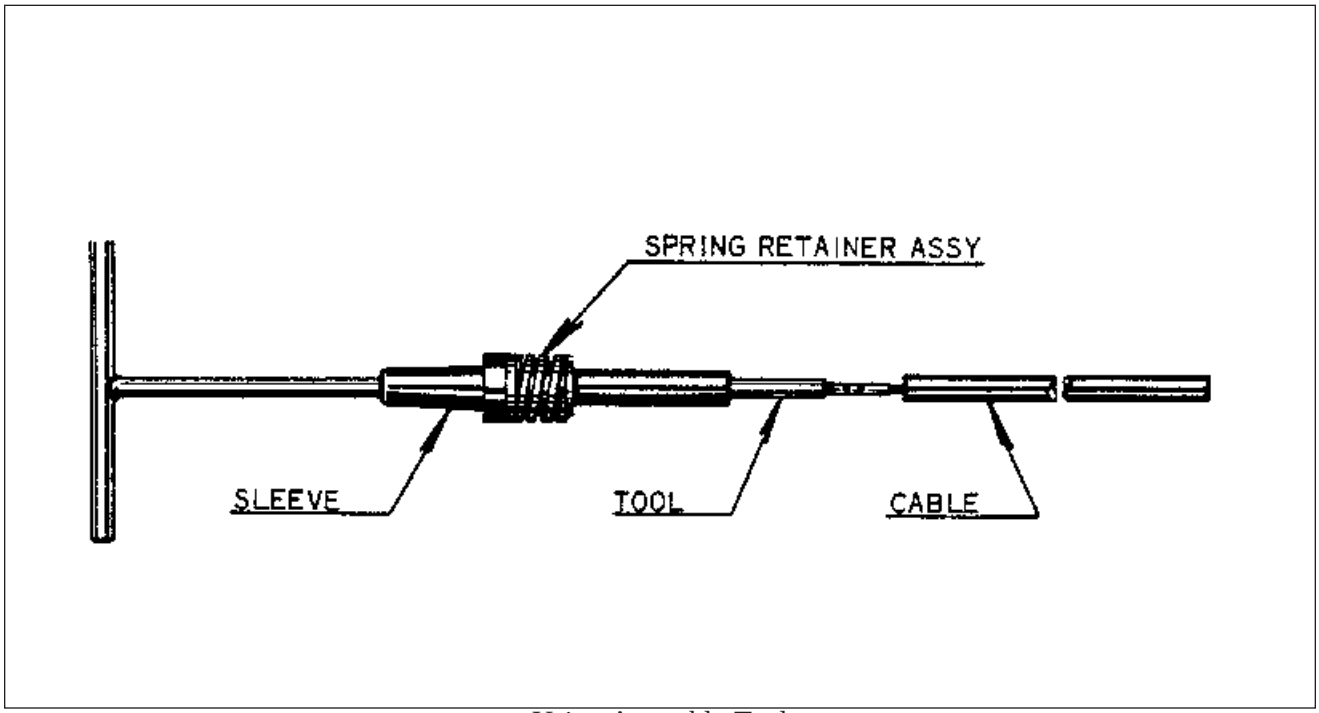

Using Assembly Tool
Figure 25

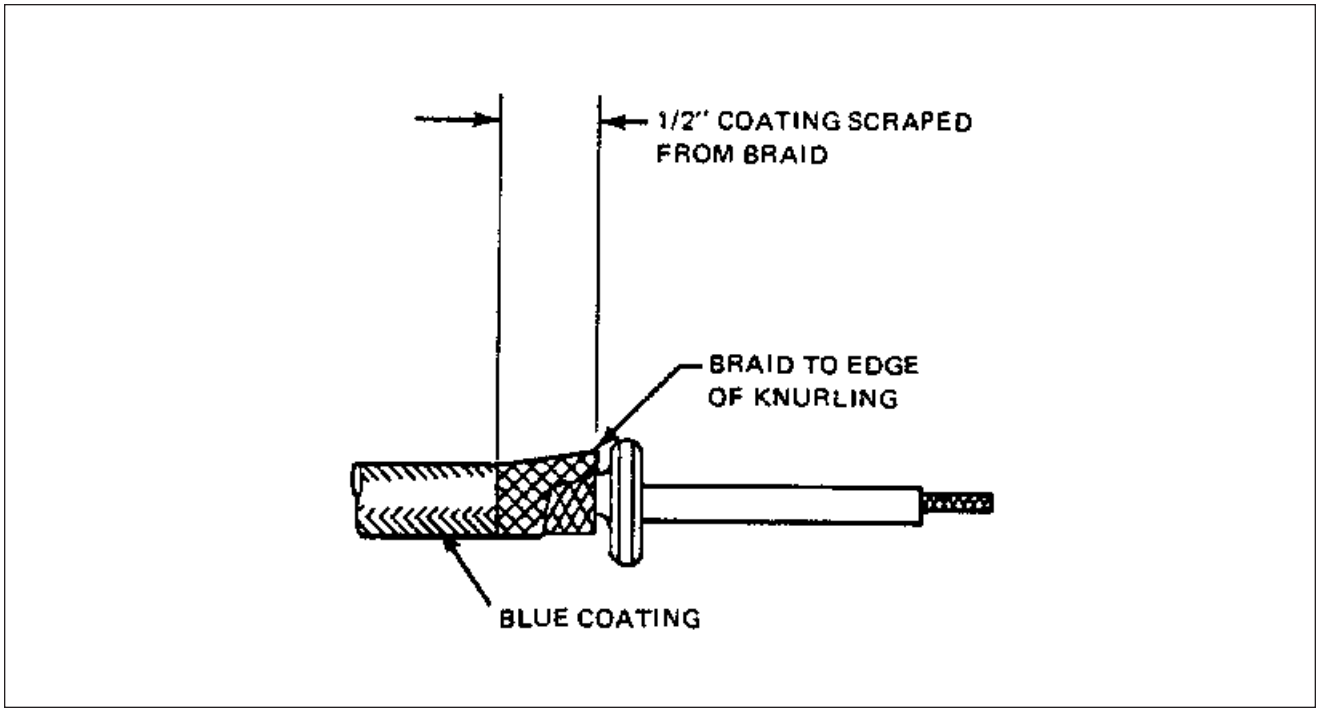

Ferrule Positioned Under Braid
Figure 26

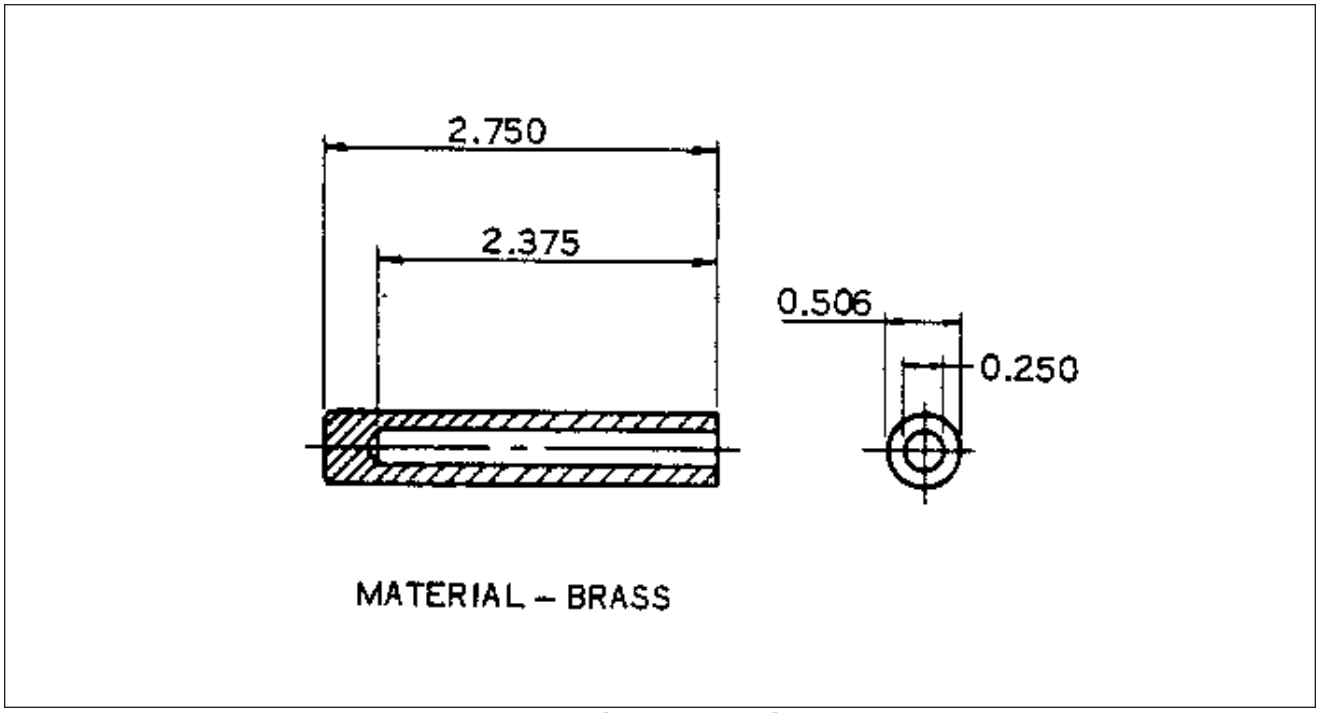

Ferrule Seating Tool
Figure 27

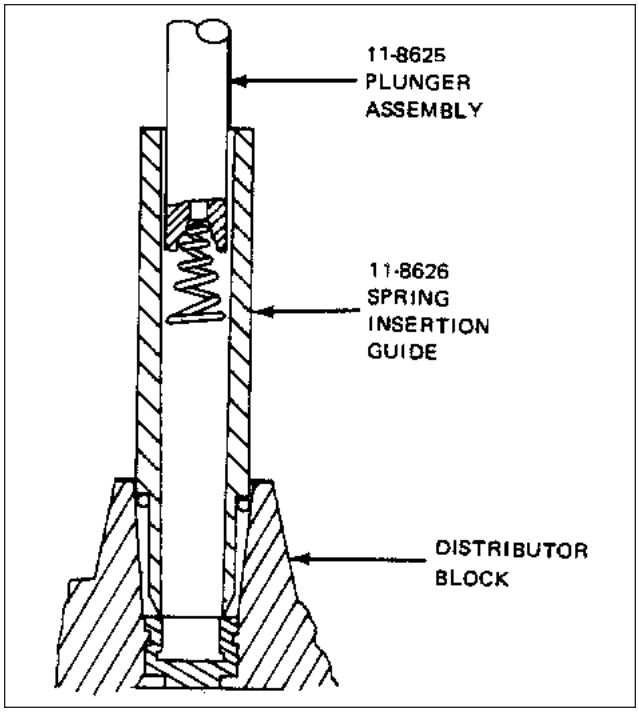

Position of 11-8627 Kit and Contact Spring at Start of Installation

Figure 28

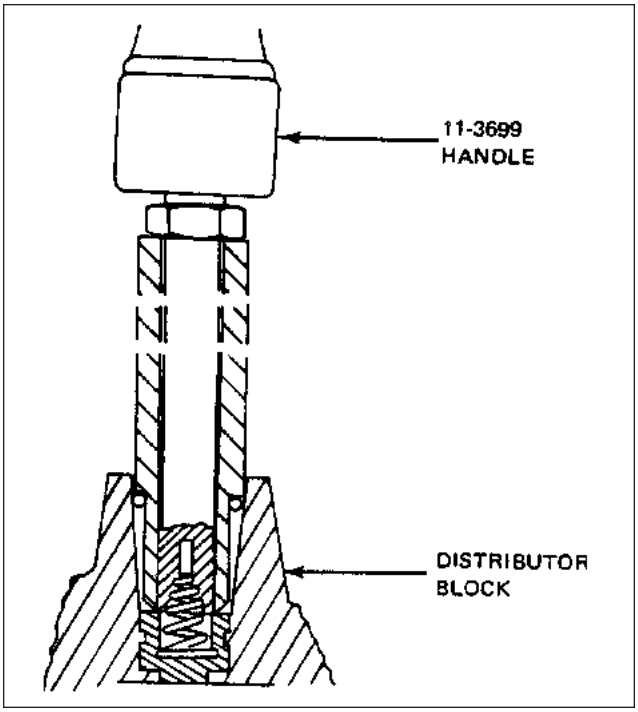

Position of 11-8627 Kit and Contact Spring after Installation

Figure 29

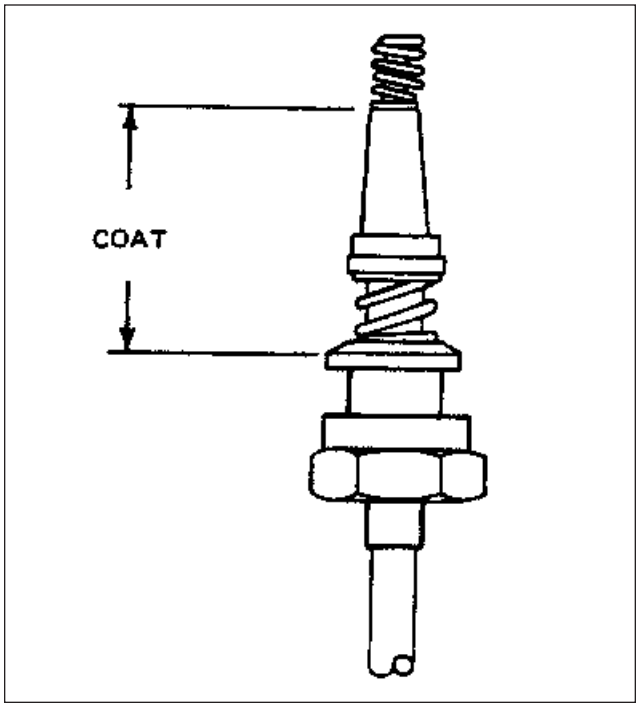

Lubricating Sleeve

Figure 30

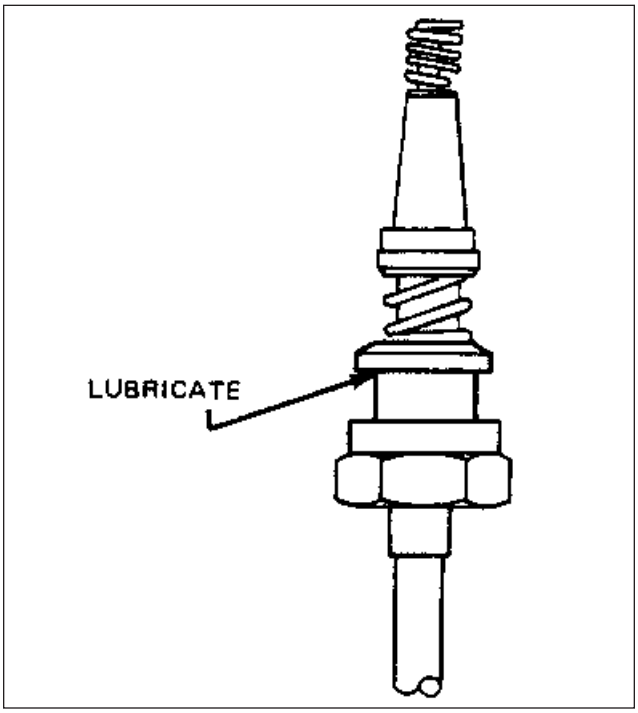

Lubricating Ferrule Shoulder

Figure 31

g. Pull the lead back into the cover to wedge the braid between the tapers of the cover and ferrule.
h. Provide a back up support for the cover and seat the ferrule using the 11-7074 Ferrule Seating Tool (refer to Figure 27) and a mallet. Ferrule must be driven straight into the cover and fully seated.
i. Thread the pre-stripped end of conductor through grommet. Place a new eyelet on conductor and crimp per instructions given in second paragraph of Maintenance of Harness.

6. When lead being replaced is of the elbow type, salvage the used elbow and compression springs for installation on replacement lead. Install these and new sleeve and contact spring (refer to Figures 28 and 29) furnished with replacement lead per instructions given in Steps 1 thru 4.
7. Reposition clamps and brackets and replace cable ties removed earlier. Clean the grommets, sleeves and the inside of the cover with methylethylketone or denatured alcohol.
8. Spray grommets and sleeves with Fluorocarbon Spray, such as MS-S-122, supplied by Miller-Stephenson Chemical Co. Inc., 16 Sugar Hollow Road, Danbury, Connecticut 06810, or equivalent.
9. Prior to seating spark plug lead terminal in plug barrel use fluorocarbon spray on spark plug terminal insulating sleeve (refer to Figure 30) to prevent heat from sticking sleeve to spark plug barrel. Lightly lubricate the shoulder of ferrule to minimize twisting of ferrule. (Refer to Figure 31.) Use GO-JO NO LOK manufactured by Goger Inc., Akron, Ohio 44309.
10. Check cam securing screw. Screw must be torqued to 16-20 inch-pounds.
11. With all high tension terminal grommets seated against the ferrules in the cover, attach the bottom capacitor lead to the right main breaker and then the top capacitor lead to the left main breaker. Position the cover on the magneto and secure. Torque cover screws to 30-35 inch-pounds.
12. Carefully route the high tension spark plug leads away from any hot spots such as manifolds and sharp edges which might cause heat damage or chafing. Check leads for proper location in clamps so when clamps are tightened the leads will not be crushed. Leads should be taut to prevent chafing due to vibration, but not so taut as to produce undue strain or leads.
13. After all leads have been properly routed and secured to the engine, recheck all clamp securing screws for tightness. Fasten coupling nuts to proper spark plugs and torque as specified in Chart 2. Do not allow ferrules to turn while torquing nuts.

CHART 2.
COUPLING TORQUES

Spark Plug Coupling Threads	Torque (lb.-in.)
5/8 - 24	90 - 95
3/4 - 20	110 - 120

SPARK PLUGS.

REMOVAL OF SPARK PLUGS.

1. Loosen the coupling nut on the harness lead and remove the terminal insulator from the spark plug barrel well.

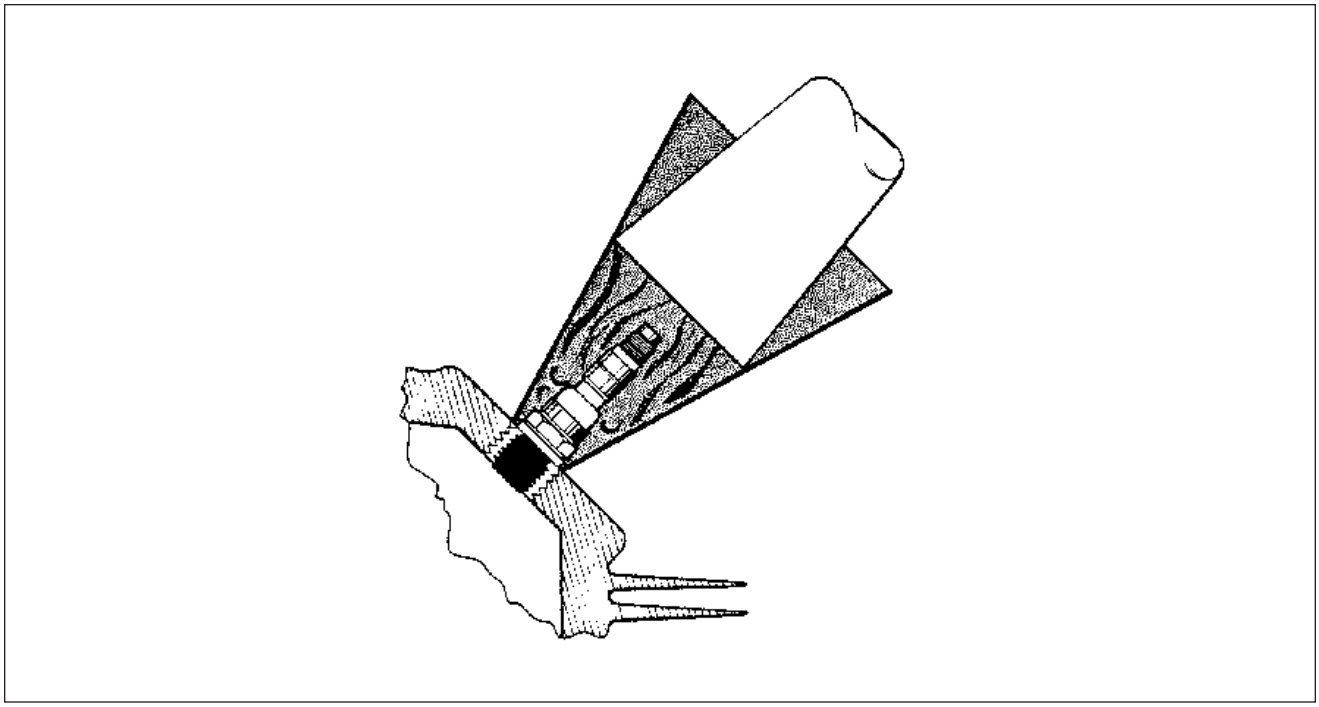

Removing Spark Plug Frozen to Bushing
Figure 32

– NOTE –

When withdrawing the ignition cable lead connection from the plug, care must be taken to pull the lead straight out and in line with the center line of the plug barrel; otherwise a side load will be applied, which frequently results in damage to the barrel insulator and connector. If the lead cannot be removed easily in this manner, the resisting contact between the neoprene collar and the barrel insulator will be broken by a rotary twisting of the collar. Avoid undue distortion of the collar and possible side loading of the barrel insulator.

2. Remove the spark plug from the engine. In the course of engine operation, carbon and other combustion products will be deposited on the end of the spark plug and will penetrate the lower threads to some degree. As a result, greater torque is frequently required for removing a plug than for its installation. Accordingly, the torque limitations given do not apply to plug removal and sufficient torque must be used to unscrew the plug. The higher torque in removal is not as detrimental as in installation, since it cannot stretch the threaded section. It does, however, impose a shearing load on this section and may, if sufficiently severe, produce a failure in this location.

– NOTE –

Torque indicating handle should not be used for spark plug removal because of the greater torque requirement.

3. Place spark plugs in a tray that will identify their position in the engine as soon as they are removed.

– NOTE –

Spark plugs should not be used if they have been dropped.

4. Removal of seized spark plugs in the cylinder may be accomplished by application of liquid carbon dioxide by a conical metal funnel adapter with a hole in the apex just large enough to accommodate the funnel of a CO2 bottle. (Refer to Figure 32.) When a seized spark plug cannot be removed by normal means, the funnel adapter is placed over and around the spark plug. Place the funnel of the CO2 bottle inside the funnel adapter and release the carbon dioxide to chill and contract the spark plug. Break the spark plug loose with a wrench. A warm cylinder head at the time the carbon dioxide is applied will aid in the removal of an excessively seized plug.
5. Do not allow foreign objects to enter the spark plug hole.

INSPECTION AND CLEANING OF SPARK PLUGS.

1. Visually inspect each spark plug for the following non-repairable defects:
   a. Severely damaged shell or shield threads nicked up, stripped or cross-threaded.
   b. Badly battered or rounded shell hexagons.
   c. Out-of-round or damaged shielding barrel.
   d. Chipped, cracked or broken ceramic insulator portions.
   e. Badly eroded electrodes worn to approximately 50% of original size.
2. Clean the spark plug as required, removing carbon and foreign deposits.
3. Test the spark plug both electrically and for resistance.
4. Set the electrode gap at 0.015 to 0.018 inches.

INSTALLATION OF SPARK PLUGS.

Before installing spark plugs, ascertain that the threads within the cylinder are clean and not damaged.

1. Apply anti-seize compound sparingly on the threads and install gasket and spark plugs. Torque 360 to 420 inch-pounds.

– CAUTION –

Make certain the deep socket is properly seated on the spark plug hexagon as damage to the plug could result if the wrench is cocked to one side when pressure is applied.

2. Carefully insert the terminal insulator in the spark plug and tighten the coupling nut.

– END –

SWITCHING.

IGNITION SWITCH.

REMOVAL OF IGNITION SWITCH.

1. Insure the ignition switch is in the “OFF” position.
2. Gain access to and disconnect the power lead (+) from the battery.
3. Remove the ignition switch retaining nut from the switch on the forward side of the instrument panel and withdraw the switch from the panel.
4. Mark the wires and note their position on the switch, then disconnect the wires.

INSTALLATION OF IGNITION SWITCH. (Refer to Figure 33.)

1. Attach wires to switch as shown in Figure 33.
2. Install the ignition switch in the instrument panel.
3. Connect the power lead (+) to the battery.

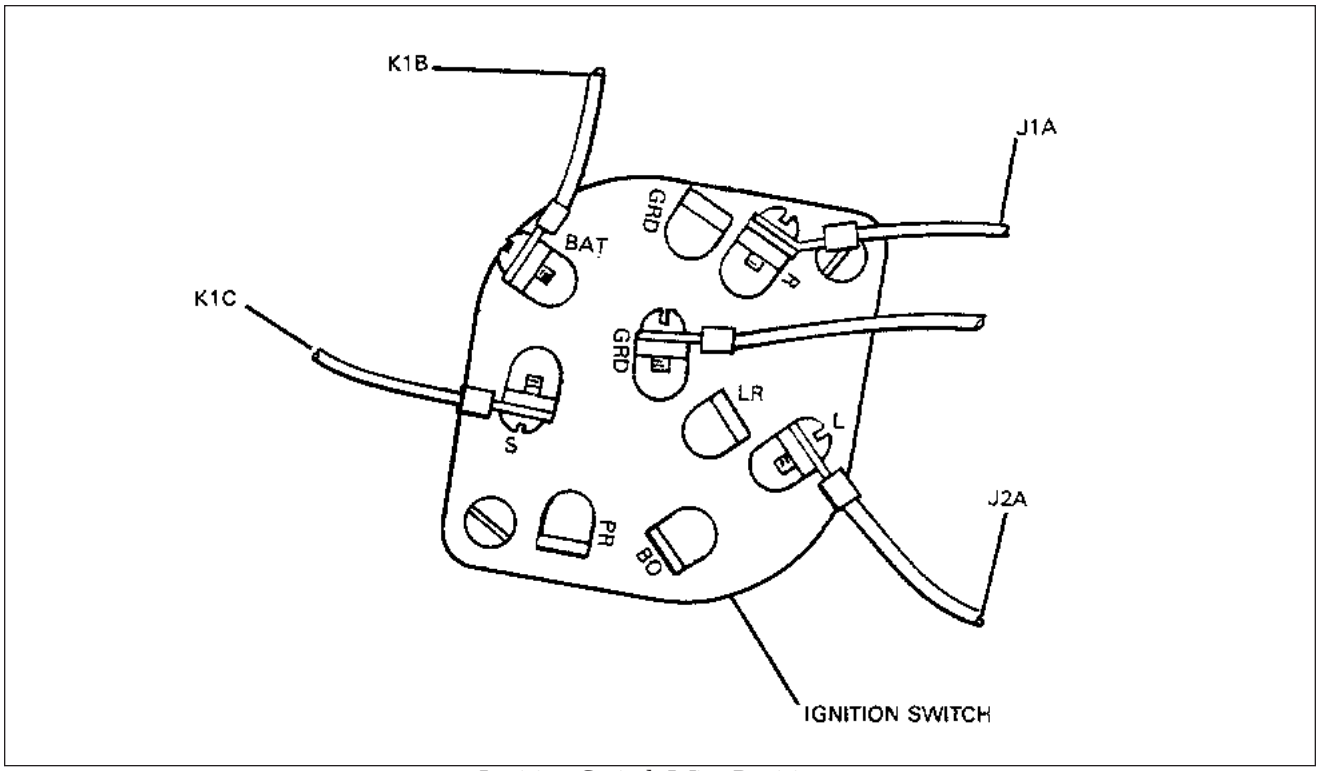

Ignition Switch Wire Positions
Figure 33

THIS PAGE INTENTIONALLY LEFT BLANK

THIS PAGE INTENTIONALLY LEFT BLANK

THIS PAGE INTENTIONALLY LEFT BLANK

CHAPTER

77

ENGINE INDICATING

CHAPTER 77 - ENGINE INDICATING

TABLE OF CONTENTS/EFFECTIVITY

CHAPTER SECTION	SUBJECT	GRID NO.	EFFECTIVITY
77-00-00	GENERAL	4C13	July 1, 1993
77-10-00	POWER	4C13	July 1, 1993
77-10-00	Manifold Pressure Gauge	4C13	July 1, 1993
77-10-00	Tachometer Indicator	4C14	July 1, 1993
77-10-00	Engine Oil Pressure Gauge	4C15	July 1, 1993
77-20-00	TEMPERATURE	4C16	July 1, 1993
77-20-00	Oil Temperature Indicator	4C16	July 1, 1993
77-20-00	Exhaust Gas Temperature Gauge	4C16	July 1, 1993
77-20-00	Removal of EGT Probe and Gauge	4C16	July 1, 1993
77-20-00	Cleaning and Inspection of EGT	4C17	July 1, 1993
77-20-00	Installation of EGT Probe and Gauge	4C17	July 1, 1993
77-20-00	Cylinder Head Temperature Gauge	4C18	July 1, 1993

GENERAL.

POWER.

MANIFOLD PRESSURE GAUGE

The manifold pressure gauge is a vapor proof, absolute pressure type instrument. Pressure from the intake manifold of the engine is transmitted to the instrument through a line. A pointer indicates the manifold pressure available at the engine in inches of mercury.

CHART 1
TROUBLESHOOTING (MANIFOLD PRESSURE INDICATOR)

Trouble	Cause	Remedy
Excessive error at existing barometric pressure.	Pointer shifted.	Replace instrument.
Excessive error when engine is running.	Line leaking.	Tighten line connections.
Sluggish or jerky pointer movement.	Defective instrument.	Replace instrument.
Dull or discolored marking.	Age.	Replace instrument.
Incorrect reading.	Moisture or oil in line.	Disconnect lines and blow out.

TACHOMETER INDICATOR

The tachometer is connected to the engine accessory by a flexible cable and provides an indication of crankshaft speed in revolutions per minute. The instrument has a recording mechanism for recording the time that the engine is in actual operation.

CHART 2
TROUBLESHOOTING (TACHOMETER)

Trouble	Cause	Remedy
No reading on indicator, either permanent or intermittent	Broken shaft.	Replace instrument.
	Loose cable connections.	Tighten cable.
Pointer oscillates excessively.	Rough spot on, or sharp bend in shaft.	Repair or replace.
	Excessive friction in instrument.	Replace instrument.
Indicator changes in climb.	Excessive clearance in speed cup.	Replace instrument.
Pointer goes all the way to stop, more noticeable in cold weather.	Excessive lubricant in instruments.	Replace instrument.
Pointer jumps at idle.	Speed cup hitting rotating magnet.	Replace instrument.
Tachometer cable breaks.	Cable bent too sharply.	Reroute cable.

ENGINE OIL PRESSURE GAUGE

On the PA-32R-301 SP and the PA-32R-301T Turbo SP, the oil pressure gauge is mounted in the instrument cluster on the instrument panel. On the PA-32R-301 II HP, the oil pressure gauge is part of the combination engine gauge which also includes the oil temperature gauge and the cylinder head temperature gauge. This gauge will indicate the amount of oil pressure available at the pressurized engine oil passage.

CHART 3
TROUBLESHOOTING (ENGINE OIL PRESSURE GAUGE)

Trouble	Cause	Remedy
Excessive error at zero.	Pointer loose on shaft. Overpressure or seasoning of bourdon tube.	Replace instrument.
Excessive scale error.	Improper calibration adjustment.	Replace instrument.
Excessive pointer oscillation	Air in line or rough engine relief.	Disconnect line and fill with light oil. Check for leaks. If trouble persists, clean and adjust relief valve.
Sluggish operation of pointer or pressure fails to build up.	Engine relief valve open.	Clean and check.

TEMPERATURE.

OIL TEMPERATURE INDICATOR

On the PA-32R-301 SP and the PA-32R-301T Turbo SP, the oil temperature indicator is mounted in the instrument cluster on the instrument panel. On the PA-32R-301 II HP, the oil temperature indicator is part of the combination engine gauge which also includes the oil pressure gauge and the cylinder head temperature gauge. This instrument will provide a temperature indication of the engine oil in degrees Fahrenheit. The instrument has a temperature bulb located in the oil screen assembly, on the engine accessory section.

CHART 4
TROUBLESHOOTING (OIL TEMPERATURE INDICATOR)

Trouble	Cause	Remedy
Instrument fails to show any reading.	Broken or damaged bulb, or open wiring.	Check engine unit and wiring.
Excessive scale error.	Improper calibration adjustment.	Repair or replace.
Pointer fails to move as engine is warmed up.	Broken or damaged bulb, or open wiring.	Check engine unit and wiring.
Dull or discolored marking.	Age.	Replace instrument.

EXHAUST GAS TEMPERATURE GAUGE

This instrument, which is commonly referred to as EGT, is used to aid the pilot in selecting the most economical fuel-air mixture for cruising flight at a power setting of 75% or less. It is a sensing device to monitor the fuel-air mixture leaving the engine cylinders. This gauge is adjustable. If it is found defective after checking with troubleshooting chart, it should be replaced. If the leads to the gauge are defective in any way, they should be replaced. When replacing leads, it is very important to use the same type and length of wire, as the resistance of the leads is critical for the proper operation of this gauge. The EGT probe is the clamp mounted type which is adjusted for proper depth into the exhaust stream.

PA-32R-301T models incorporate a TIT probe mounted in the exhaust transition areas. (Refer to Figure 1)

REMOVAL OF EGT PROBE AND GAUGE

1. Disconnect wires from the EGT gauge at the instrument panel.
2. Remove four bolts which secure the gauge to the instrument panel and remove the gauge.
3. Remove wires from the wire harness going to the engine.
4. Loosen the nut or clamp which secures the EGT probe to the exhaust system and remove the probe.

CLEANING AND INSPECTION OF EGT.

Unless mechanical damage is evident, broken glass, bent or broken pointer, or broken case, the following checks should be performed before removing the instrument.

1. Remove probe and check for broken weld (at the tip end) or burnt off end. Measured resistance of probe should be .8 ohms. Clean the connections with steel wool before reassembly.
2. Disconnect lead wires at instrument and measure. Resistance with lead wires connected to probe should be 3.3 ohms. Clean connections with steel wool before reassembly.
3. With leads connected to instrument, heat probe with propane torch to dull red. The meter should read up to the fourth graduation or approximately 1500°F. Before making this check, make sure that the adjustment screw, which is located in the rear of the instrument case, is in the center of its travel. If this screw has been turned to either end of full travel, it will shut instrument off and no indication will be shown on the pointer. If meter still does not read. replace it.

–CAUTION –

Do not connect ohmmeter. It will burn out the movement of the meter.

INSTALLATION OF EGT PROBE AND GAUGE

1. Install the probe and secure with locknut or clamp.
2. Route the thermocouple wires along with the existing wire harness to the instrument panel.
3. Install the EGT gauge into the instrument panel and secure with four bolts.
4. Connect the thermocouple wires to the rear of the EGT gauge.

CHART 5
TROUBLESHOOTING (EXHAUST GAS TEMPERATURE GAUGE)(ALCOR)

Trouble	Cause	Remedy
Gauge inoperative.	Defective gauge, probe, or wiring.	Check probe and lead wires for chafing, breaks or shorting between wires and / or metal structure.
	Adjusting potentiometer turned off scale.	Recalibrate instruments.
Fluctuating reading.	Loose, frayed or broken electrical leads or faulty connections.	Clean and tighten connections. Repair or replace defective leads.

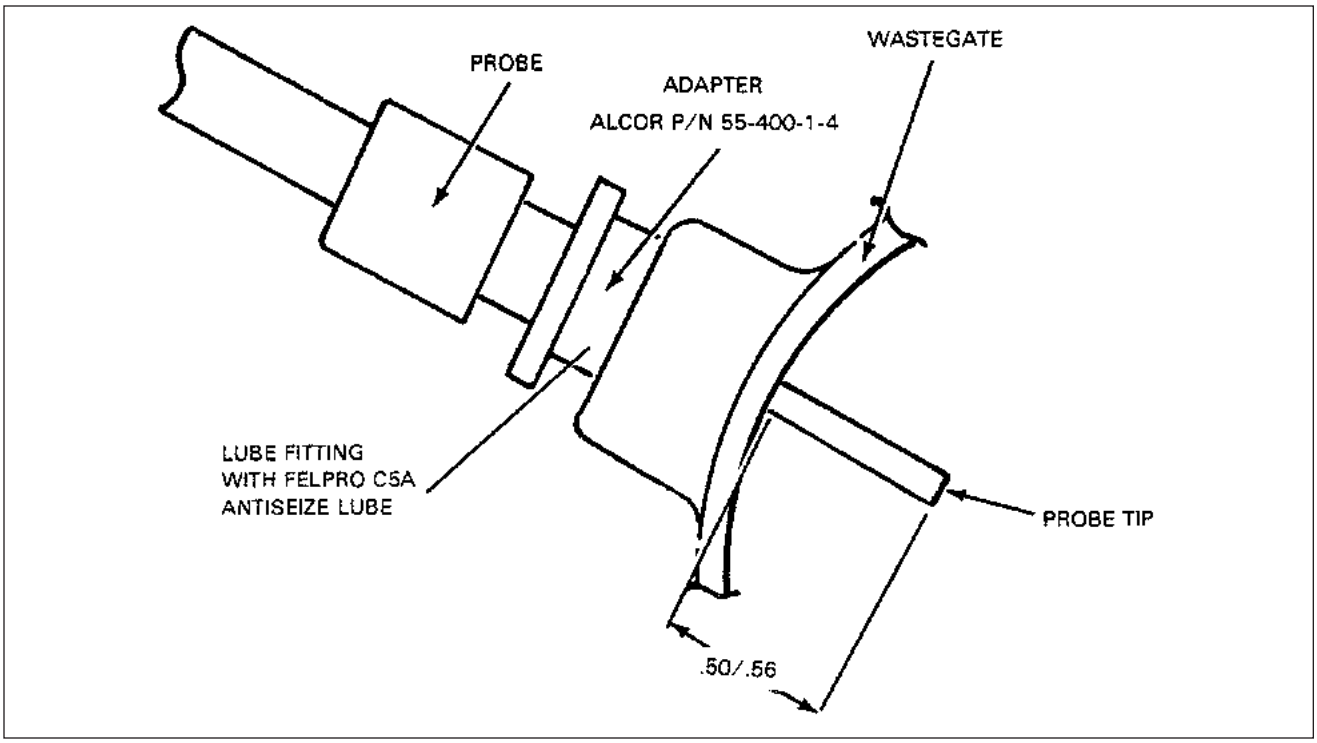

Position of TIT Probe (PA-32R-301T)
Figure 1

CYLINDER HEAD TEMPERATURE GAUGE

On the PA-32R-301 SP and the PA-32R-301T Turbo SP, the cylinder head temperature gauge is mounted in the instrument cluster on the instrument panel. On the PA-32R-301 II HP, the cylinder head temperature gauge is part of the combination engine gauge which also includes the oil pressure gauge and the oil temperature gauge. This instrument measures the cylinder head temperature using a sender located in the #2 cylinder head. It is an electrical instrument and it is wired through the instruments circuit breaker.

CHART 6
TROUBLESHOOTING (CYLINDER HEAD TEMPERATURE GAUGE)

Trouble	Cause	Remedy
Instrument shows no indication.	Power supply wire broken.	Repair wire.
	Defective instrument.	Replace instrument.
	Master switch off.	
Instrument goes all the way to upper stop.	Wire broken between sender and gauge.	Repair wire.
	Defective sender	Replace sender.

THIS PAGE INTENTIONALLY LEFT BLANK

THIS PAGE INTENTIONALLY LEFT BLANK

CHAPTER

78

EXHAUST

CHAPTER 78 - EXHAUST

TABLE OF CONTENTS/EFFECTIVITY

CHAPTER SECTION	SUBJECT	GRID NO.	EFFECTIVITY
78-00-00	GENERAL	4C23	July 1, 1993
78-00-00	Inspection of Exhaust System	4C23	July 1, 1993

GENERAL.

INSPECTION OF EXHAUST SYSTEM. (Refer to Figure 1 and Figure 2)

A very thorough inspection of the entire exhaust system, including heat exchange shroud, (muffler and muffler baffles on PA-32R-301 or complete tailpipe assembly on PA-32R-301T). stacks and all exhaust connections must be accomplished at each 100 hour inspection. The possibility of exhaust system failure increases with use. It is recommended that the system be checked even more carefully as the number of hours increase; for example an inspection at the 700 hour period would be more critical than one in the 100 hour period. The system should also be checked carefully before winter operation when the cabin heat will be in use.

– CAUTION –

When removing or installing coupling clamp, slide clamp over end of pipe before assembly. Excessive spreading can lead to premature failure of clamp.

– NOTE –

It is recommended that all airplanes be fitted with a new (muffler PA-32R-301 or tailpipe assembly for PA-32R-301T) at or near 1000 hours of service life.

On PA-32R-301 removal of the tail pipe and stacks are required for inspection of the muffler baffles. On PA-32R-301T removal of the tail pipe is required for inspection of the cabin heat shroud and heat sink material under the shroud on the tail pipe. Remove or loosen all exhaust shields, cabin heat shroud, heat blankets, etc., as required to permit inspection of the complete system. Perform the necessary cleaning operations and inspect all external surfaces for dents, cracks and missing parts. Pay particular attention to welds, clamps, supports and support attachment lugs, slip joints, stack flanges and gaskets. Inspect internal baffles or diffusers on PA32R-301. Any cracks, warpage or severe oxidation are cause for replacement of muffler or tail pipe assembly.

If any component is inaccessible for a thorough visual inspection, accomplish one of the following:

1. Perform a submerged pressure check of the PA-32R-301 muffler and exhaust stack at 2 psi air pressure or perform a submerged pressure check of the tail pipe assembly at 20 psi air pressure on PA-32R-301T airplanes.
2. Conduct a ground test using a carbon monoxide indicator by heading the airplane into the wind, warming the engine on the ground, advancing the throttle to full static RPM with cabin heat valves open, and taking readings of the heated airstream inside the cabin at each outlet. Appropriate sampling procedures applicable to the particular indicator must be followed. If carbon monoxide concentration exceeds .005 percent or if a dangerous reading is obtained on an indicator not calibrated in percentages, the muffler on PA32R-301 or tail pipe assembly on PA-32R-301T must be replaced.

INSPECTION OF EXHAUST SYSTEM. (continued)

3. On PA-32R-301 insure the proper installation of the shroud on the muffler upon reassembly.
   a. Check the left end of muffler and shroud assembly to determine if the shroud retaining tabs are totally visible on the outside of the shroud. (Refer to Figure 1.)
   b. If tabs are not visible and the shroud is mislocated, remove and reinstall the shroud in the proper position.
   c. Mislocation of the shroud could result in shifting of the shroud with a resulting reduction of cabin heat and possible inability of the nose landing gear to fully extend to its down lock position.

– NOTE –

When coupling exhaust pipe slip joints, it is recommended that Fel-Pro type C5-A anti-seize lubricant be applied to the entire joint surface to prevent slip joint binding.

NOTE

INSPECT ALL WELDS WHERE INDICATED BY ARROWS.

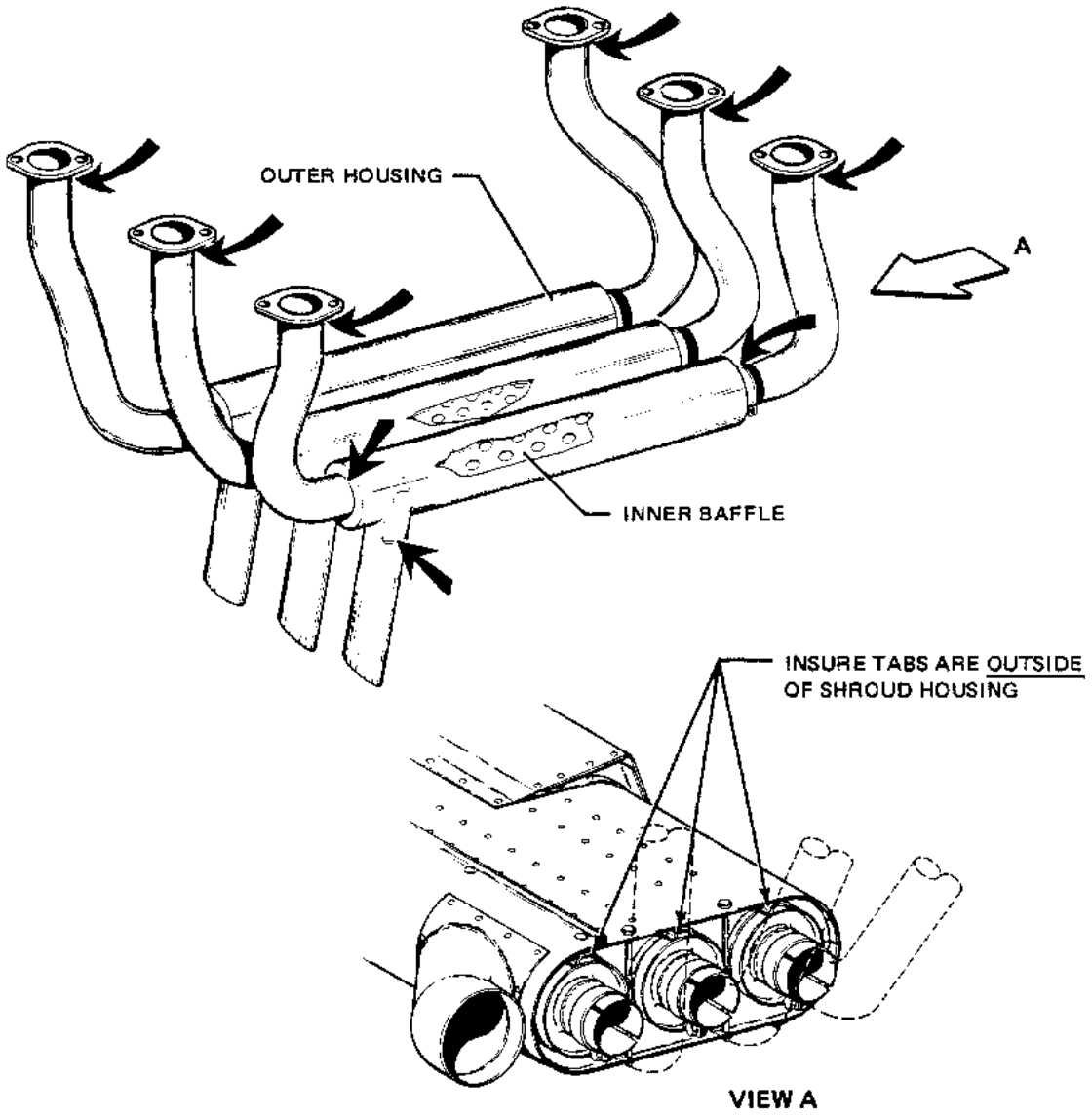

Exhaust System Inspection Points (PA-32R-301 SP)
Figure 1

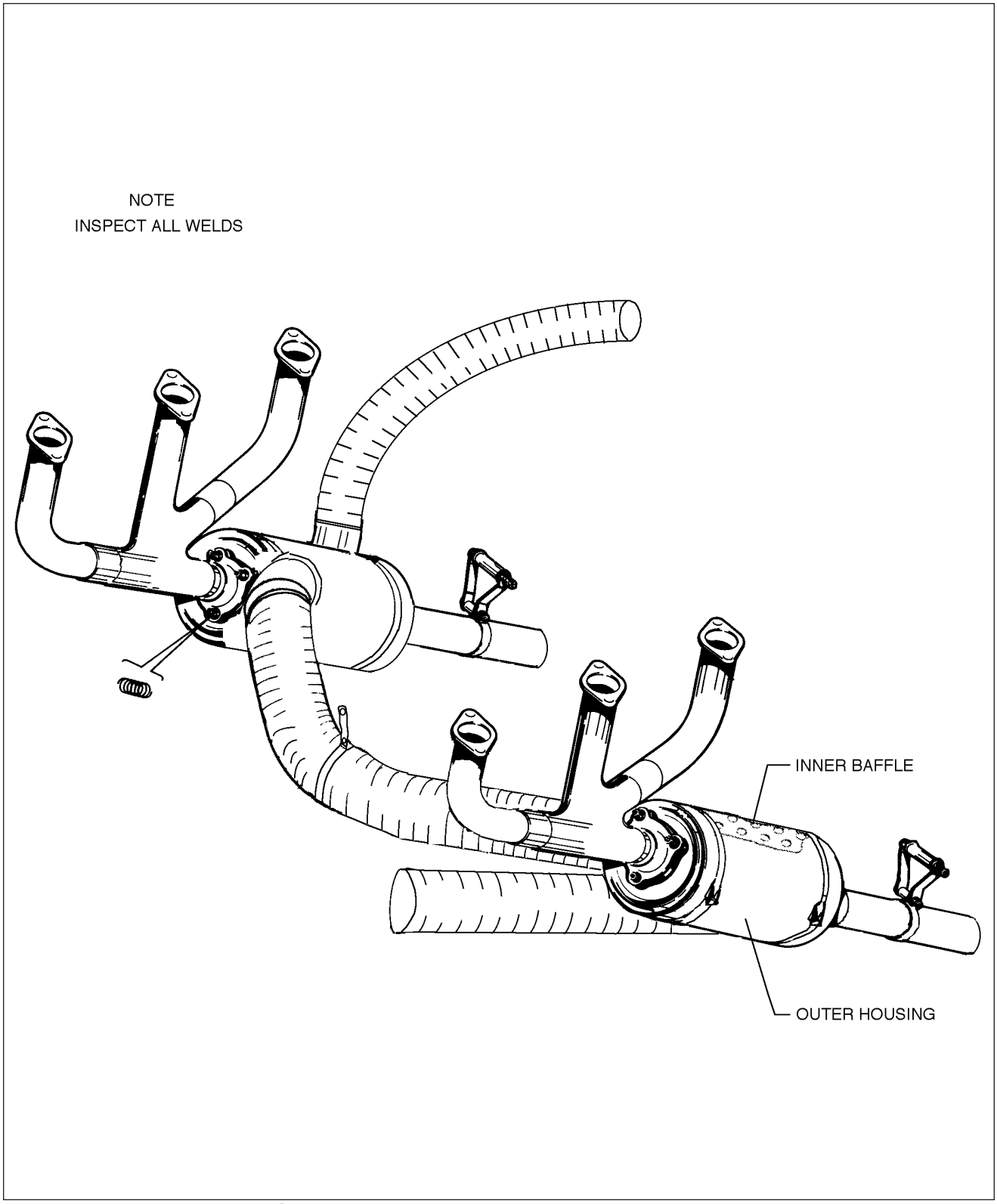

Exhaust System Inspection Points (PA-32R-301 II HP)
Figure 2

THIS PAGE INTENTIONALLY LEFT BLANK

THIS PAGE INTENTIONALLY LEFT BLANK

CHAPTER

79

OIL

CHAPTER 79 - OIL

TABLE OF CONTENTS/EFFECTIVITY

CHAPTER SECTION	SUBJECT	GRID NO.	EFFECTIVITY
79-20-00	DISTRIBUTION	4D7	July 1, 1993
79-20-00	Oil Cooler	4D7	July 1, 1993
79-20-00	Installation of Oil Cooler	4D7	July 1, 1993
79-30-00	INDICATING	4D7	July 1, 1993
79-30-00	Oil Pressure Sensor	4D7	July 1, 1993
79-30-00	Removal of Oil Pressure Sensor	4D7	July 1, 1993
79-30-00	Installation of Oil Pressure Sensor	4D7	July 1, 1993

DISTRIBUTION.

OIL COOLER.

INSTALLATION OF OIL COOLER.

1. When installing fittings in the oil coolers, care should be used to prevent excessive torque being applied to the cooler. When a rectangular fitting boss is provided, backup wrench should be used, employing a scissor motion, so that no load is transmitted to the cooler. When the oil cooler has a round fitting boss. care should be taken not to permit excessive torque on the fittings.
2. If a pipe thread fitting is used, it should be installed only far enough to seal with sealing compound.
3. Apply Lubon No. 404 to all male pipe thread fittings; do not allow sealant to enter the system.
4. If fitting cannot be positioned correctly using a torque of 10 to 15 foot-pounds, another fitting should be used.
5. When attaching lines to the cooler, a backup wrench should be used.
6. After installation, inspect the cooler for distorted end cups.
7. Run-up engine. After run-up, check for oil leaks.

INDICATING.

OIL PRESSURE SENSOR.

REMOVAL OF OIL PRESSURE SENSOR.

Access to the sensor unit gained by reaching up under the instrument panel. Removal is accomplished by the following:

1. Disconnect the two electrical leads.
2. Unscrew the sensor unit from the bulkhead fitting.
3. Catch spillage and cover hole to prevent foreign matter from entering oil line.

INSTALLATION OF OIL PRESSURE SENSOR.

1. Seal sensor unit pipe threads with thread sealant tape (3M-Teflon No. 48 x 1/4)
2. Screw the sensor unit into the bulkhead fitting.
3. Reconnect the two electrical leads.
4. Perform operational check.

– END –

THIS PAGE INTENTIONALLY LEFT BLANK

CHAPTER

80

STARTING

CHAPTER 80 - STARTING

TABLE OF CONTENTS/EFFECTIVITY

CHAPTER SECTION	SUBJECT	GRID NO.	EFFECTIVITY
80-00-00	GENERAL	4D11	July 1, 1993
80-00-00	Description and Operation	4D11	July 1, 1993
80-00-00	Troubleshooting	4D11	July 1, 1993
80-10-00	CRANKING	4D15	July 1, 1993
80-10-00	Maintenance of Starting System	4D15	July 1, 1993
80-10-00	Overhaul of Starting Motor	4D15	July 1, 1993
80-10-00	Removal of Starting Motor	4D15	July 1, 1993
80-10-00	Disassembly of Starting Motor	4D16	July 1, 1993
80-10-00	Brushes	4D16	July 1, 1993
80-10-00	Armature	4D16	July 1, 1993
80-10-00	Field Coils	4D16	July 1, 1993
80-10-00	Brush Holders	4D18	July 1, 1993
80-10-00	Gear and Pinion Housing	4D18	July 1, 1993
80-10-00	Bendix Drive	4D18	July 1, 1993
80-10-00	Assembly of Starting Motor	4D18	July 1, 1993
80-10-00	Bench Test	4D18	July 1, 1993
80-10-00	Starting Motor Control Circuit	4D19	July 1, 1993
80-10-00	Starting Motor Service Test Specifications	4D20	July 1, 1993
80-10-00	Starting Through External Power Receptacle With Airplane's Battery Nearly Depleted	4D20	July 1, 1993

GENERAL.

DESCRIPTION AND OPERATION. (Refer to Figure 1.)

The gear reduction starting motor consists of six major components: The Commutator End Head Assembly, The Armature, The Frame and Field Assembly, The Gear Housing, The Pinion Housing, and The Bendix Drive Assembly. When the starting circuit is energized, battery current is applied to the starting motor terminal. Current flows through the field coils, creating a strong magnetic field. At the same time, current flows through the brushes to the commutator, through the armature windings to ground. The magneto force created in the armature combined with that created in the field windings begins to turn the armature.

The gear cut on the drive end of the armature shaft extends through the gear housing, where it is supported by a roller bearing. The gear mates with the teeth of the reduction gear that drives the Bendix shaft. The shaft is keyed to the reduction gear. The Bendix drive is held in position on the shaft by a "spiral" pin. The shaft is supported in the gear housing by a closed end roller bearing and in the pinion housing by a graphtized bronze bearing.

When the armature turns the reduction gear, the Bendix drive pinion meshes with the flywheel ring gear by inertia and action of the screw threads within the Bendix sleeve. A detent pin engages in a notch in the screw threads which prevents demeshing if the engine fails to start when the starting circuit is de-energized.

When the engine reaches a predetermined speed, centrifugal action forces the detent pin out of the notch in the screw shaft and allows the pinion to demesh from the flywheel.

TROUBLESHOOTING.

Troubles peculiar to the starting system are listed in Chart 1, along with their probable causes and suggested remedies.

CHART 1
TROUBLESHOOTING (STARTER) (Sheet 1 of 2)

Trouble	Cause	Remedy
Motor fails to operate.	Low battery charge.	Check and recharge if necessary.
	Defective or improper wiring or loose connections.	Refer to electrical wiring diagram and check all wiring.
	Defective starter solenoid or control switch.	Replace faulty unit.
	Binding, worn, or improperly seated brush, or brushes with excessive side play.	Brushes should be a free fit in the brush boxes without excessive side play. Binding brushes and brush boxes should be wiped clean with a cloth moistened with undoped gasoline (gasoline having no anti-knock additives). A new brush should be run in until at least 50 percent seated: however, if facilities are not available for running in brushes, then the brush should be properly seated by inserting a strip of number 000 sandpaper between the brush and commutator, with the sanded side next to the brush. Pull sandpaper in the direction of rotation, being careful to keep it in the same contour as the commutator.

– NOTE –

Do not use coarse sandpaper or emory cloth. After seating, clean thoroughly to remove all sand and metal particles to prevent excessive wear. Keep motor bearing free from sand or metal particles.

CHART 1
TROUBLESHOOTING (STARTER) (Sheet 2 of 2)

Trouble	Cause	Remedy
Motor fails to operate. (continued)	Dirty commutator	If commutator is rough or dirty, smooth and polish with number 0000 sandpaper. If too rough and pitted, remove and turn down. Blow out all particles.
	Shorted, grounded, or open armature.	Remove and replace with an armature known to be in good condition.
	Grounded or open field circuit.	Test, repair if possible or replace with a new part.
Low motor and cranking speed.	Worn, rough, or improperly lubricated motor or starter gearing.	Disassemble, clean, inspect, and relubricate, replacing ball bearings if worn.
	Same electrical causes as listed under "Motor fails to operate".	Same remedies listed for these troubles.
Excessive arcing of motor brushes.	Binding, worn, or improperly seated brush or brushes with excessive side play.	See information above dealing with this trouble.
	Dirty commutator, rough, pitted, or scored.	Clean as outlined above.
Excessive wear and arcing of motor brushes.	Rough or scored commutator.	Remove and turn commutator down on a lathe.
	Armature assembly not concentric.	Reface commutator.

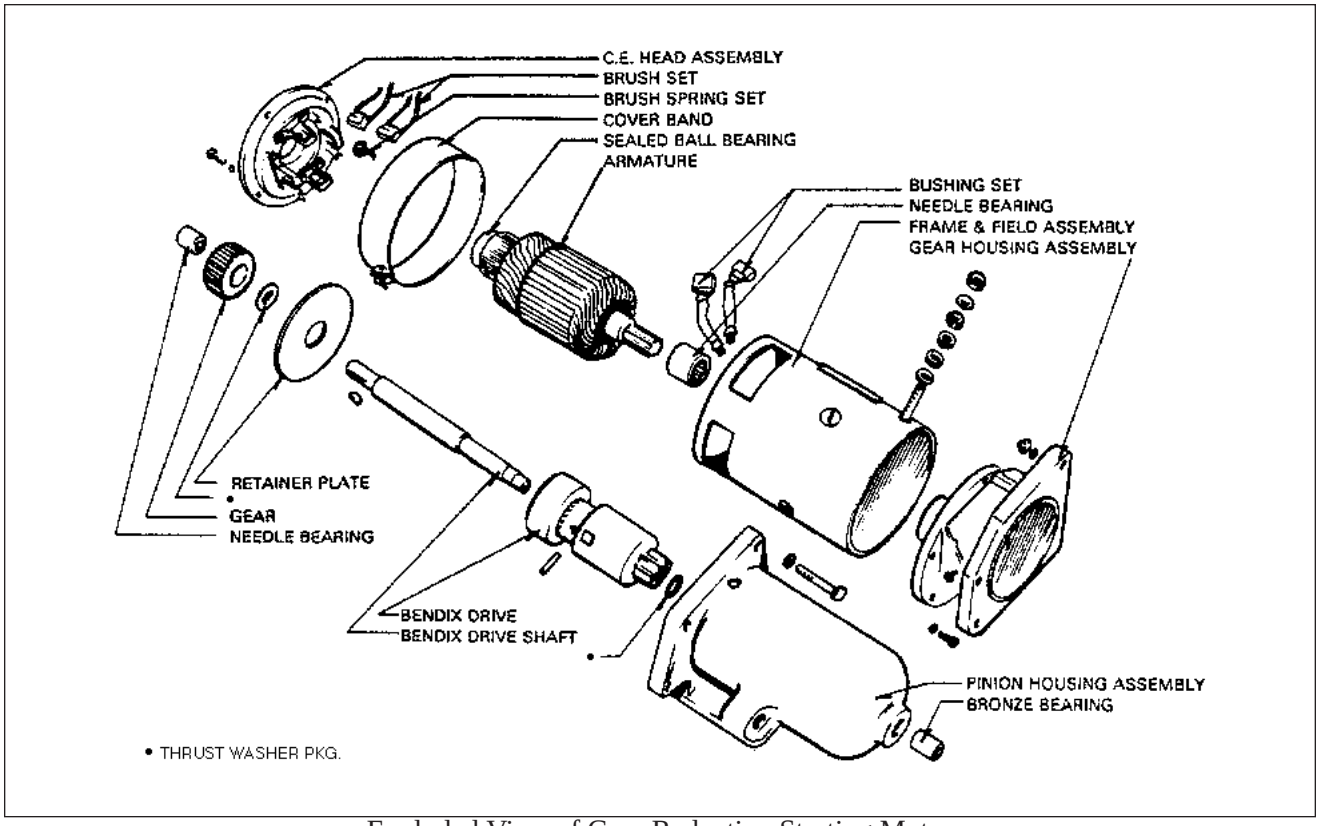

Exploded View of Gear Reduction Starting Motor
Figure 1

– END –

CRANKING.

MAINTENANCE OF STARTING SYSTEM.

The starting circuit should be inspected at regular intervals, the frequency of which should be determined by the amount of service and the conditions under which the vehicle is operated. It is recommended that such inspection be made at each 100 hours and include the following:

1. The battery should be checked with a hydrometer to be sure it is fully charged and filled to the proper level with approved water. A load test should be made to determine battery condition. If dirt and corrosion have accumulated on the battery, it should be cleaned with a solution of baking soda and water. Be sure none of the solution enters the battery cells.
2. The starting circuit wiring should be inspected to be sure that all connections are clean and tight and that the insulation is sound. A voltage loss test should be made to locate any high-resistance connections that would affect starting motor efficiency. This test is made with a low-reading voltmeter while cranking the engine or at approximately 100 amperes, and the following limits should be used:

    a. Voltage loss from insulated battery post to starting motor terminal - 0.3-volt maximum.
    b. Voltage loss from battery ground post to starter frame - 0.1-volt maximum.

– NOTE –

If voltage loss is greater than the above limits, additional tests should be made over each part of the circuit to locate the high-resistance connections.

3. No lubrication is required on the starting motor except at the time of overhaul. Then lubricate the entire shaft under Bendix Drive, fill grooves in armature shaft at drive end and pack gear box with 1.3 to 2.0 ounces of Lithium Soap Base Grease #1925 Molytex “O” or equivalent.
4. The starting motor should be operated for a few seconds with the ignition switch off to make sure that the pinion engages properly and that it turns freely without binding or excessive noise. Then the engine should be started two or three times to see that the pinion disengages properly when the engine is turned off.

OVERHAUL OF STARTING MOTOR.

If during the above inspection any indication of starting motor difficulty is noted, the starting motor should be removed from the engine for cleaning and repair.

REMOVAL OF STARTING MOTOR.

To remove the starting motor from the engine, first disconnect the ground cable from the battery post to prevent short circuiting. Disconnect the lead from the starting motor terminal, then take out the mounting bolts. The motor can then be lifted off and taken to the bench for overhaul.

DISASSEMBLY OF STARTING MOTOR.

1. Remove the frame screws from the commutator end head and pull end head and armature from frame. Lift the brushes and lock in elevated position with brush springs. Use a puller to remove the end head from the armature. Use special bearing puller to remove the sealed ball bearing from the armature shaft.
2. Remove the frame screws that secure the gear housing to the frame. Remove bolts and nuts holding the gear housing to the pinion housing and separate the two units. Pull Bendix shaft from pinion housing. Do not lose the steel spacer that is located on the pinion end of the shaft. Remove reduction gear, woodruff key and steel spacer from shaft.
3. Turn the Bendix pinion until it locks in the extended position. Locate "spiral" pin and use a punch to remove. Slide drive assembly off the shaft. Do not attempt to disassemble the drive and do not dip it in cleaning solvent.
4. To remove the roller bearings from the gear housing, use an arbor press and the correct bearing arbor. DO NOT HAMMER OUT. Each part should be cleaned and inspected for excessive wear or damage. Bearings should be checked for proper clearance and evidence of roughness or galling. Oil and dirt should be removed from insulation and the condition of the insulation checked.

BRUSHES.

Check the brushes to see that they slide freely in their holders and make full contact on the commutator. If worn to half their original length or less, they should be replaced.

ARMATURE.

1. Check the commutator for uneven wear, excessive glazing or evidence of excessive arcing. If only slightly dirty, glazed or discolored, the commutator can be cleaned with 00 or 000 sandpaper. If the commutator is rough or worn, it should be turned in a lathe. (Refer to Figure 2.) The armature shaft should be inspected for rough bearing surfaces and rough or damaged splines.
2. To test the armature for grounds, a set of test probes connected in series with a 110-volt light should be used. Touch one probe to a commutator segment and the other to the armature core. If the test lamp lights, the armature is grounded and should be replaced.
3. To test for shorted armature coils, a growler is used. (Refer to Figure 3.) The armature is placed on the growler and slowly rotated by hand while a steel strip is held over the core so that it passes over each armature core slot. If a coil is shorted, the steel strip will vibrate.
4. A quick check for opens can be made by inspecting the trailing edge (in direction of rotation) of the commutator segments for excessive discoloration. This condition indicates an open circuit.

FIELD COILS.

1. Check the field coils for grounds (refer to Figure 4) by placing one test probe on the frame and the other on the starter terminal. Be sure the brushes are not accidentally touching the frame. If the lamp lights, the fields are grounded. Repair or replace.
2. Inspect all connections to make sure they are clean and tight and inspect insulation for deterioration.

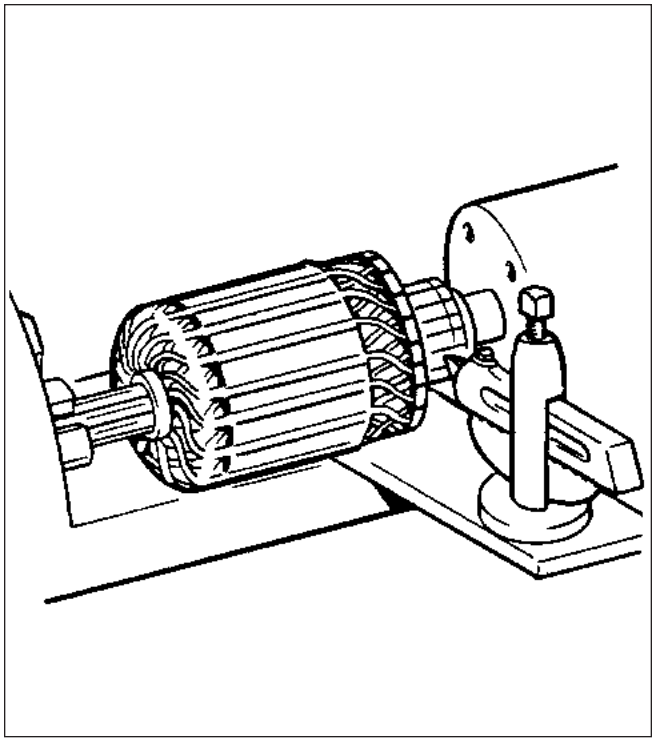

Turning Starting Motor Commutator
Figure 2

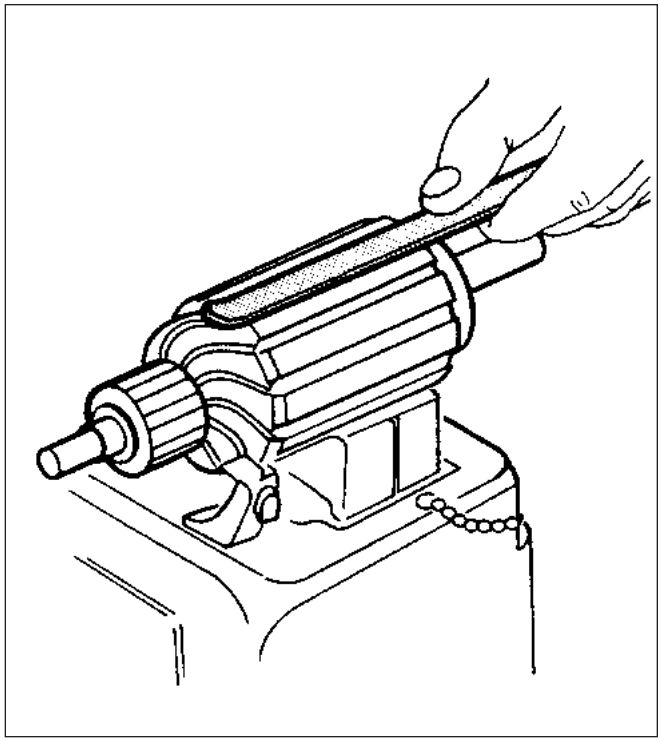

Testing Motor Armature for Shorts
Figure 3

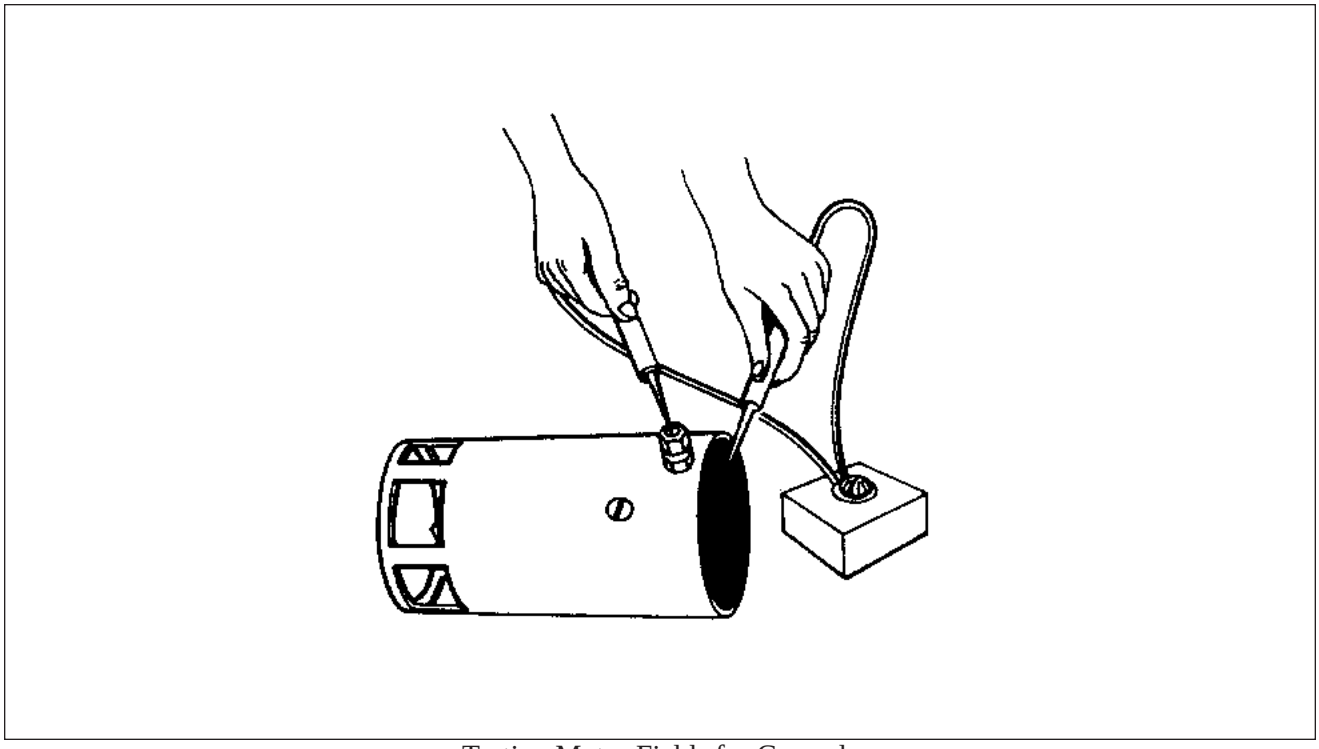

Testing Motor Fields for Grounds
Figure 4

BRUSH HOLDERS.

1. To test brush holders, touch one test probe to the brush plate and the other to each brush holder.
2. The test lamp should light when the grounded brush holders are touched and should not light when the insulated brush holders are touched.

GEAR AND PINION HOUSING.

Inspect housings for cracks and bearings for excessive wear. Remove rust, paint or grease from mounting surfaces.

BENDIX DRIVE.

The Bendix Drive should be wiped clean with a dry cloth. The pinion should turn smoothly in one direction and should lock in the other direction. Replace drive if it fails to check as above or if the pinion teeth are excessively worn or damaged.

ASSEMBLY OF STARTING MOTOR.

1. When assembling the starting motor, always use an arbor press and the proper bearing arbor for installing graphitized bronze and roller bearings. The Bendix shaft should have a thin film of Lubriplate #777 or equivalent on the Bendix portion of the shaft. End play should be .005 to .050 of an inch.
2. New brushes should be properly seated when installing by wrapping a strip of 00 sandpaper around the commutator (with the sanding side out) 1-1/4 to 1-1/2 times maximum. Drop brushes on sandpaper covered commutator and turn the armature slowly in the direction of rotation. Dust should be blown out of the motor after sanding.

– NOTE –

The spring tension is 32 to 40 ounces with new brushes. This tension is measured with the scale hooked under the brush spring near the brush and the reading is taken at right angles to the line of force exerted by the brush spring.

3. Check the position of the pinion to be sure the unit will mesh properly with the flywheel ring gear. See specifications for unit for correct dimensions. (Refer to Starting Motor Service Test Specifications.)

BENCH TEST.

1. After the starting motor is reassembled, it should be tested to see that the no-load current at a certain voltage is within specifications as given in Starting Motor Service Test Specifications. To make this test, connect as shown in Figure 5. If current is too high, check the bearing alignment and end play to make sure there is no binding or interference. Two or three sharp raps on the frame with a rawhide hammer will often help to align the bearings and free the armature.
2. If no difficulty is indicated in the above test, a stall torque test may be made to see if the starting motor is producing its rated cranking power. Make test connections as shown in Figure 6.
3. If torque and current are not within specifications, check the seating of the brushes and internal connections for high resistance. If these checks are made and found to be in good order, replace frame and field assembly and retest starter.

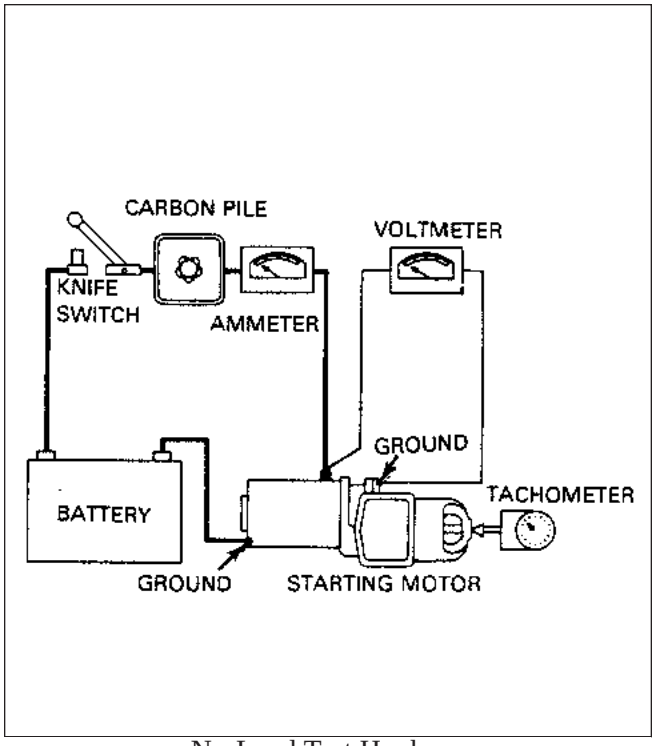

No-Load Test Hook-up
Figure 5

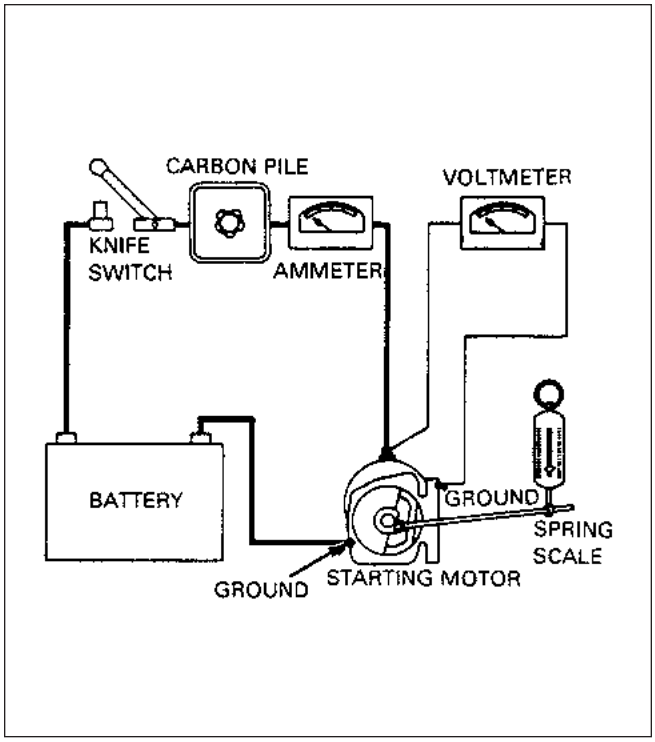

Stall-Torque Hook-up
Figure 6

STARTING MOTOR CONTROL CIRCUIT.

1. Inspect the control circuit wiring between the battery, solenoid and manual starting switches for breaks, poor connections and faulty insulation. Tighten all connections and make sure solenoid is firmly mounted and makes a good ground connection.
2. Check the voltage loss across the switch contacts during normal starting. If loss is in excess of 0.2-volts per 100 amperes, the solenoid should be replaced.
3. If solenoid fails to operate when the manual starting switch is turned on or if it fails to release when the manual starting switch is released, it should be removed and tested to specifications. If either opening or closing voltages are not to specifications, replace the solenoid.

STARTING MOTOR SERVICE TEST SPECIFICATIONS.

Prestolite specifications for 12-volt starting motors installed as standard equipment on PA-32 series airplanes are as follows:

CHART 2
STARTING MOTOR SPECIFICATIONS

Motor Model	MZ-4206
Min. Brush Tension	32 oz.
Max. Brush Tension	40 oz.
No-Load Test (77°F)	
Volt	10
Max. Amps	75
Min. RPM	2000
Stall Torque	
Amps	560
Min. Torque, Ft. Lbs.	38.0
Approx. Volts	4.0
Pinion Position*	
Drive at rest	1.748 in. - 1.855 in.
Drive extended	2.388 in. - 2.495 in.
* This dimension is measured from the centerline of the mounting hole nearest the drive end head to the edge of the pinion.	

STARTING THROUGH EXTERNAL POWER RECEPTACLE WITH AIRPLANE'S BATTERY NEARLY DEPLETED.

When using a 12-volt battery for external power starting and the airplane's battery is nearly depleted, the following procedure should be used:

1. Disconnect the airplane's battery at the negative terminal to prevent excessive loading of the external starting battery.
2. Check that all of the airplane's electrical equipment is turned OFF.
3. Connect the external battery to the external power receptacle; turn master switch ON and start engine using normal starting procedure.
4. Turn master switch OFF; remove external battery, and then reconnect the battery at the negative terminal.
5. Turn master switch ON.

THIS PAGE INTENTIONALLY LEFT BLANK

THIS PAGE INTENTIONALLY LEFT BLANK

CHAPTER

81

TURBINES

CHAPTER 81 - TURBINES

TABLE OF CONTENTS/EFFECTIVITY

CHAPTER SECTION	SUBJECT	GRID NO.	EFFECTIVITY
81-20-00	TURBOCHARGER	4E1	July 1, 1993
81-20-00	Troubleshooting	4E1	July 1, 1993
81-20-00	Turbocharger Nomenclature	4E4	July 1, 1993
81-20-00	Turbocharger Lubrication System Priming	4E7	July 1, 1993
81-20-00	Turbocharger Assembly	4E7	July 1, 1993
81-20-00	Removal of Turbocharger	4E7	July 1, 1993
81-20-00	Installation of Turbocharger	4E7	July 1, 1993
81-20-00	Exhaust Wastegate Assembly	4E8	July 1, 1993
81-20-00	Removal of Exhaust Wastegate Assembly	4E8	July 1, 1993
81-20-00	Installation of Exhaust Wastegate Assembly	4E8	July 1, 1993
81-20-00	Adjustment of Exhaust Wastegate Assembly	4E8	July 1, 1993
81-20-00	Turbocharger Decoking	4E9	July 1, 1993
81-20-00	Throttle Control Stop Limits	4E9	July 1, 1993

TURBOCHARGER.

The turbocharger system requires little attention between turbo overhauls. However, it is recommended that the items outlined in the Inspection Report of Chapter 5 be checked during required inspection intervals. Should trouble occur, refer to the Troubleshooting Table in this section and seek out the possible cause. Do not break the clamp seal joining the turbine and compressor units.

TROUBLESHOOTING.

Troubles peculiar to the turbocharger are listed in Chart 1 along with their probable causes and suggested remedies.

CHART 1
TROUBLESHOOTING (TURBOCHARGER) (Sheet 1 of 3)

Trouble	Cause	Remedy
Excessive noise or vibration.	Improper bearing lubrication	Supply required oil pressure. Clean or replace oil line; clean oil strainer. If trouble persists, overhaul turbocharger.
	Leak in engine intake or exhaust manifold.	Tighten loose connections or replace manifold gaskets as necessary.
	Dirty impeller blades.	Disassemble and clean.
Engine will not deliver rated power.	Clogged manifold system	Clear all ducting.
	Foreign material lodged in compressor impeller or turbine.	Disassemble and clean.
	Excessive dirt build-up in compressor.	Thoroughly clean compressor assembly. Service air cleaner and check for leak age. Service air cleaner
	Leak in engine intake or exhaust.	Tighten loose connections or replace manifold gaskets as necessary
	Rotating assembly bearing-seizure.	Overhaul turbocharger.

CHART 1
TROUBLESHOOTING (TURBOCHARGER) (Sheet 2 of 3)

Trouble	Cause	Remedy
Engine will not deliver rated power (continued)	Waste gate butterfly not closing.	Butterfly shaft binding. Check bearings.
	Turbocharger impeller binding, frozen, or fouling housing.	Check bearings. Replace turbocharger.
Critical altitude lower than specified.	Waste gate valve sticking.	Clean and free action.
		Check interconnect system from throttle to waste gate
Engine surges or smokes.	Clogged induction duct.	Check induction duct for restrictions to air flow.
	Bootstrapping.	Operate engine within range outlined in operation manual.

– NOTE –

Smoke would be normal if engine has idled for a prolonged period.

High deck pressure. (Compressor discharge pressure.)	Waste gate sticking closed.	Butterfly shaft binding. Check bearings. Replace waste gate valve or correct interconnect control rigging.
Oil in induction housing.	Engine idles too slow - turbo doesn't turn allowing oil to leak from compressor seal.	Increase engine idle speed to a maximum of 700 RPM, if turbo still smokes, it must be replaced. Check inter-connect control for proper adjustment. Note: New turbo may smoke for a short period of time.
	Turbine oil bearing check valve not closing at engine shut down.	Check spring actuated check valve at turbo oil inlet fitting.

CHART 1
TROUBLESHOOTING (TURBOCHARGER) (Sheet 3 of 3)

Trouble	Cause	Remedy
White exhaust	Leaking oil seal in turbine (coked oil drain passages).	Clean drain passages. It is sometimes necessary to overhaul or replace turbo.
	Engine idles too slow, turbo not turning.	Increase engine idle speed to a maximum of 700 RPM, if turbo still smokes, it must be overhauled or replaced. Check interconnect control for proper adjustment.
Waste gate won't close completely.	Broken linkage.	Repair linkage and adjust waste gate to open or close position.
	Improper adjustment.	Rerig interconnect control.
Turbine won't come up to speed.	Worn or coked bearings.	Replace or overhaul turbo charger.
	Damage to turbine or compressor wheel.	Replace or overhaul turbo charger.
	Exhaust leaks.	Repair leaks.

TURBOCHARGER NOMENCLATURE.

Many unfamiliar terms may appear on the following pages of this manual. An understanding of these will be helpful, if not necessary, in performing maintenance and troubleshooting. The following is a list of commonly used terms and names as applied to turbocharging.

TERM	MEANING
Supercharge	To increase the air pressure (density) above or higher than ambient conditions.
Supercharger	A device that accomplishes the increase in pressure.
Turbo-Supercharger	More commonly referred to as a “Turbocharger” this device is driven by a turbine. The turbine is spun by energy extracted from the engine exhaust gas.
Compressor	The portion of a turbocharger that takes in ambient air and compresses it before discharging it to the engine.
Turbine	The exhaust driven end of the turbocharger unit.
Wastegate	The wastegate is a butterfly type valve in the exhaust by-pass which, throughout its travel from open to closed. allows varied amounts of exhaust pressure to by-pass the turbine, controlling its speed, hence the output of the compression.
Ground Boosted or Ground Turbocharged	These phrases indicate that the engine depends on a certain amount of turbocharging at sea level to produce the advertised horsepower. An engine that is so designed will usually include a lower compression ratio to avoid detonation .
Deck Pressure	The pressure measured in the area downstream of the turbo compressor discharge and upstream of the engine throttle valve. This should not be confused with manifold pressure.
Manifold Pressure	The pressure measured downstream of the engine throttle valve and is almost directly proportioned to the engine power output.
Normalizing	If a turbocharger system is used only to regain power losses caused by decreased air pressure of high altitude, it is considered that the engine has been "normalized".
Overboost	An overboost condition means that manifold pressure is exceeding the limits at which the engine was tested and FAA certified and can be detrimental to the life and performance of the engine. Overboost can be caused by malfunctioning controllers or improperly operating wastegate in the automatic system or by pilot error in a manual controlled system.

TERM	MEANING (continued)
Overshoot	Overshoot is a condition of the automatic controls not having the ability to respond quickly enough to check the inertia of the turbocharger speed increase with rapid engine throttle advance. Overshoot differs from overboost in that the high manifold pressure lasts only for a few seconds. This condition can usually be overcome by smooth throttle advance.
Bootstrapping	This is a term used in conjunction with turbo machinery. If you were to take all the air coming from a turbocharger compressor and duct it directly back into the turbine of that turbocharger, it would be called a bootstrap system and if no losses were encountered, it would theoretically run continuously. It would also be very unstable because if for some reason the turbo speed would change, the compressor would pump more air to drive the turbine faster, etc. A turbocharged engine above critical altitude (wastegate closed) is similar to the example mentioned above, except now there is an engine placed between the compressor discharge and turbine inlet. Slight system changes caused the exhaust gas to change slightly, which causes the turbine speed to change slightly, which causes the compressor air to the engine to change slightly, which in turn again affects the exhaust gas, etc.
Critical Altitude	A turbocharged engine's wastegate will be in a partially open position at sea level. As the aircraft is flown to high altitude (lower ambient pressures) the wastegate closes gradually to maintain the preselected manifold pressure. At the point where the wastegate reaches its full closed position, the preselected manifold pressure will start to drop and this is considered critical altitude.

– NOTE –

Refer to latest revision of Lycoming Service Bulletin No. 369 for recommended engine inspections after any Overspeed or Overboost conditions.

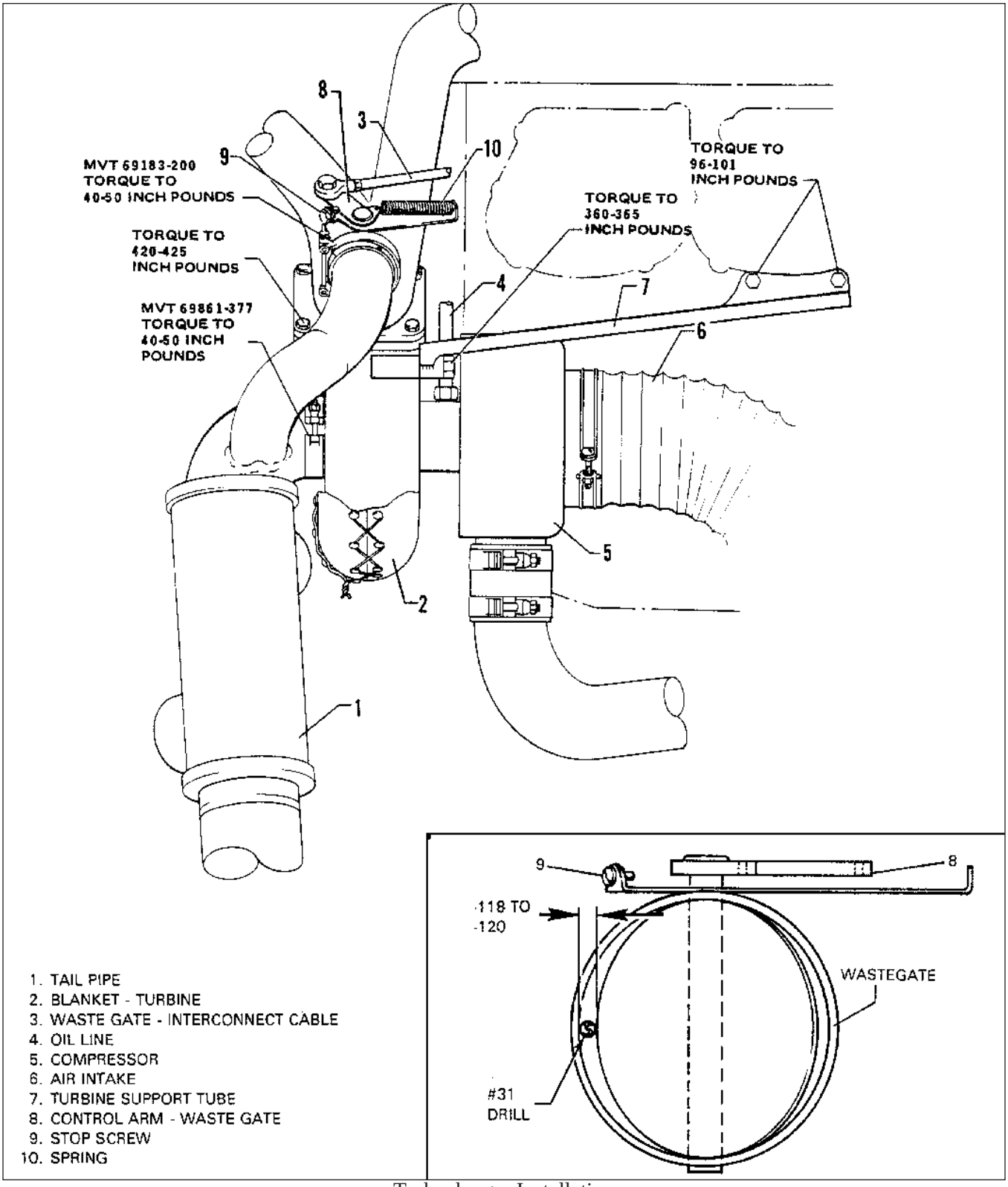

Turbocharger Installation
Figure 1

TURBOCHARGER LUBRICATION SYSTEM PRIMING

Immediately prior to mounting the unit, prime the lubrication system as follows:

1. Invert turbocharger and fill center housing with new clean oil through oil drain.
2. Turn rotating assembly by hand to coat bearings and thrust washer with oil.
3. Coat threads of attaching bolts or studs with high temperature thread lubricant.
4. After installing turbocharger, flush oil through oil inlet line and ensure that line is clean and unobstructed.
5. Fill engine and oil inlet line with new, clean lubricating oil, and connect line.
6. Connect oil return line.

– NOTE –

If the turbocharger is to be installed on a new or newly overhauled engine, operate the engine with a separate oil filter in the oil supply line to the turbocharger during the first hour of operation. This must be done to ensure that no metal particles are carried from the engine into the turbocharger lubrication system.

TURBOCHARGER ASSEMBLY

REMOVAL OF TURBOCHARGER (Refer to Figure 1.)

1. Remove the engine cowling. (Refer to Chapter 71.)
2. Remove the turbocharger compressor and turbine assembly by the following procedure:
   a. Disconnect the oil supply and return lines from the center section of the turbo.

– CAUTION –

When removing or installing coupling clamp, slide clamp over end of pipe before assembly. Excessive spreading can lead to premature failure of clamp.

   b. Disconnect the air ducts from the compressor inlet and outlet, and the exhaust system from the turbine inlet and outlet.
   c. Disconnect the tailpipe support bracket at the turbocharger and remove the tailpipe and wastegate assembly.
   d. Remove the bolts that attach the turbocharger to the mounting bracket and remove the turbocharger assembly.

INSTALLATION OF TURBOCHARGER

1. Position the turbocharger assembly in the mounting bracket and secure with mounting hardware.
2. Carefully align the exhaust system with the turbo inlet.
3. Slide coupling clamp over end of tailpipe and position the exhaust tailpipe and wastegate assembly to the turbocharger outlet.

INSTALLATION OF TURBOCHARGER (continued)

4. Install coupling clamp and while tightening the coupling clamp nuts, gently tap around the periphery of the couplings with a soft mallet while shaking the tailpipe. This will distribute the band tensions evenly. Continue tightening the clamp nuts until a torque of 40-50 inch pounds is reached on the turbocharger to tailpipe clamp and 80-90 inch pounds on the bypass coupling. Safety the clamp nuts.
5. Connect the induction tube to the compressor outlet and the induction air filter assembly to the compressor inlet.
6. Connect the oil supply lines and return lines to the turbocharger center section.
7. Install engine cowling. (Refer to Chapter 71.)

EXHAUST WASTEGATE ASSEMBLY.

REMOVAL OF EXHAUST WASTEGATE ASSEMBLY.

1. Remove engine cowling. (Refer to Chapter 71.)
2. Remove the nut, bolt and washers securing the wastegate interconnect cable bearing to the wastegate control arm.
3. Remove V band clamps securing wastegate to exhaust transition and tailpipe.

INSTALLATION OF EXHAUST WASTEGATE ASSEMBLY.

1. Install wastegate assembly with gasket between exhaust transition and tailpipe.
2. Secure wastegate with V band clamps and torque clamps to specifications given in Figure 1.
3. Secure the wastegate interconnect cable bearing to the control arm with the appropriate washers, bolt and nut.

– NOTE –

If exhaust gas probe is removed refer to Chapter 77, Figure 1 for correct positioning of probe in exhaust system.

ADJUSTMENT OF EXHAUST WASTEGATE ASSEMBLY.

The exhaust wastegate (butterfly) valve is mechanically linked to the throttle control arm by means of the wastegate interconnect cable. The wastegate may be adjusted as follows:

1. Remove the engine cowling as described in Chapter 71.
2. Remove the clamps securing the tailpipe assembly to the wastegate and separate wastegate and tailpipe assembly (separate sufficiently to allow access to the butterfly valve within the wastegate).
3. Place the throttle in the near-full open position.
4. Place the shank end of a #31 drill bit between the inner wall of the wastegate assembly and the butterfly valve (Refer to Figure 1.)
5. With the throttle now in the full-open position (against the stop) a slight drag should be felt when the drill bit is moved in an in and out motion. Should the throttle control arm not contact its stop, or should the drill bit be too loose, adjust the interconnect cable rod end to obtain the proper clearance.
6. Place the tailpipe assembly in position and secure with the appropriate clamps.
7. Install upper and lower cowling as described in Chapter 71.
8. Flight test the aircraft to determine critical altitude (16,000 ± 500 feet density altitude) at take-off power of 2700 RPM and 36 inches Hg.

ADJUSTMENT OF EXHAUST WASTEGATE ASSEMBLY. (continued)

9. If the above criteria is not met, further ground adjustment of the wastegate will be required.

– NOTE –

Do not adjust the wastegate stop screw. This is preset by the engine manufacturer to maintain .005 inch to .015 inch clearance between the wastegate valve and exhaust tube when the throttle is full open.(Refer to latest revision of Lycoming Service Bulletin No. 448.)

TURBOCHARGER DECOKING.

Mouse Milk lubricant may be used for decoking the turbine and compressor drive shaft by the following procedure:

1. Disconnect the oil inlet and outlet lines from the turbocharger and allow all oil to drain.
2. Cap the oil outlet port on the turbocharger.
3. Pour the Mouse Milk into the oil inlet port of the turbocharger and allow the unit to soak overnight.
4. Drain all Mouse Milk from the turbocharger and flush the unit with engine oil.
5. Prime the turbocharger in accordance with Turbocharger Lubrication System Priming.

THROTTLE CONTROL STOP LIMITS.

The adjustment of the throttle control stop limits is limited to just checking that the throttle control arm contacts the full open stop before the turbo wastegate contacts the fully closed stop.

– END –

THIS PAGE INTENTIONALLY LEFT BLANK

THIS PAGE INTENTIONALLY LEFT BLANK

THIS PAGE INTENTIONALLY LEFT BLANK

CHAPTER

91

CHARTS & WIRING DIAGRAMS

CHAPTER 91 - CHARTS AND WIRING DIAGRAMS

TABLE OF CONTENTS/EFFECTIVITY

CHAPTER SECTION	SUBJECT	GRID NO.	EFFECTIVITY
91-00-00	GENERAL	4E16	July 1, 1993
91-00-00	Torque Requirements	4E16	July 1, 1993
91-00-00	Decimal Conversions	4E20	July 1, 1993
91-00-00	Conversion Tables	4E21	July 1, 1993
91-00-00	List of Consumable Materials	4F2	July 1, 1993
91-00-00	Vendor Information	4F11	July 1, 1993
91-00-00	Electrical Wire Coding	4F15	July 1, 1993
91-00-00	Electrical Symbols	4F16	July 1, 1993
91-10-00	ELECTRICAL SCHEMATICS INDEX	4F19	July 1, 1993

THIS PAGE INTENTIONALLY LEFT BLANK

GENERAL.

This chapter contains miscellaneous charts which are applicable to various chapters and systems covered in this manual. All electrical schematics are also included herein.

TORQUE REQUIREMENTS.

The torque values given in Chart 2 are derived from oil-free cadmium-plated threads and are recommended for all airframe installation procedures where torquing is required, unless otherwise noted in sections where other values are stipulated. Engine torque values are found in the latest revision of Lycoming Overhaul Manual, and propeller torque values are found in Chapter 61 of this manual. Chart 1 lists the torque values for flared fittings of various sizes and material.

—CAUTION—

Do not overtorque fittings.

—NOTE—

When flared fittings are being installed, ascertain that the male threads are properly lubricated. Torque the fittings in accordance with Chart 1.

CHART 1
FLARE FITTING TORQUES

TORQUE—INCH-POUND						
TUBING OD INCHES	ALUMINUM - ALLOY TUBING FLARE - AND 10061 OR AND 10078		STEEL TUBING FLARE AND 10061		HOSE END FITTING AND HOSE ASSEMBLIES	
	MINIMUM	MAXIMUM	MINIMUM	MAXIMUM	MINIMUM	MAXIMUM
1/8	– – –	– – –	– – –	– – –	– – –	– – –
3/16	– – –	– – –	90	100	70	100
1/4	40	65	135	150	70	120
5/16	60	80	180	200	85	180
3/8	75	125	270	300	100	250
1/2	150	250	450	500	210	420
5/8	200	350	650	700	300	480
3/4	300	500	900	1000	500	850
1	500	700	1200	1400	700	1150
1 1/4	600	900	– – –	– – –	– – –	– – –
1 1/2	600	900	– – –	– – –	– – –	– – –
1 3/4	– – –	– – –	– – –	– – –	– – –	– – –
2	– – –	– – –	– – –	– – –	– – –	– – –

TORQUE REQUIREMENTS. (continued)

1. Calibrate the torque wrench periodically to assure accuracy, and recheck frequently.
2. Unless otherwise specified, torque all nuts to the applicable torque in Chart 2. If the nut (or bolt) is listed but not its mating fastener, use the lower torque in Chart 2 for the listed nut (or bolt).

—NOTE—

If normal operation requires movement between any of the components being clamped together, tighten the nut (or bolt) enough to insure intended operation of the assembly.

3. Bolt and nut threads should be clean and dry unless otherwise specified. If the threads are to be lubricated, reduce the recommended nut torque given in Chart 2 (plus the friction drag torque) by 50%.
4. For thread sizes 10 through 7/16, add the friction drag torque (in Chart 2A) for all self-locking fasteners. For non-self locking fasteners, assume the friction drag torque to be zero.
5. For other bolt sizes, determine the friction drag torque by attaching a scale type torque wrench to the nut and determining the torque required to turn the nut on the bolt. (Before the nut makes contact with the bearing surface.) Add the friction drag torque to the specified torque to get the final torque.

—NOTE—

If the bolt is stationary and the nut is torqued, use the lower side of the torque range. If the nut is stationary and the bolt is torqued use the higher side of the torque range.

6. When torquing castellated nuts, begin with minimum torque plus friction drag torque, but do not exceed maximum torque plus friction drag torque when aligning cotter key hole with the castellations in the nut. If they do not align change washers and retorque.

—NOTE—

When using castellated nuts on movable joints, do not torque as described above. Tighten nuts only enough to remove looseness in the joint and install the cotter pin.

7. Unless otherwise specified, when parts are used on Lycoming engines, using Piper furnished or existing Lycoming threaded fasteners, use the torque specified in Lycoming Service Table of Limits SSP-1776 latest revision.
8. After the final torque, apply slippage mark to the nut or bolt or screw head as applicable.

—NOTE—

For more details on torquing, refer to FAA Manual AC 43.13-lA

TORQUES: The importance of correct application can not be overemphasized. Undertorque can result in unnecessary wear of nuts and bolts as well as the parts they are holding together. When insufficient pressures are applied, uneven loads will be transmitted throughout the assembly which may result in excessive wear or premature failure due to fatigue. Overtorque can be equally damaging because of failure of a bolt or nut from overstressing the threaded areas. The following procedures should be followed to assure that the correct torque is applied:

1. Self-Locking Fasteners - Add the friction torque from Chart 2A for sizes 8 through 7/16 to the recommended torque from Chart 2 to get the final torque. This would be the actual reading on the torque wrench. To determine friction drag torque for sizes 1/2 through 1 1/4, turn the nut fully on to the bolt and determine the torque required to turn the nut. Add this friction drag torque to the torque given in Chart 2.
2. Castellated and Non-Self Locking Nuts - Use only the torque given in Chart 2. Unless otherwise specified, when castellated nuts are used with a cotter pin on moving joints, do not torque the nut. Turn the nut onto the bolt until proper grip is established and alignment with the cotter pin hole is achieved. Then install the cotter pin.

GENERAL REQUIREMENTS.

1. Calibrate the torque wrench periodically to assure accuracy. Recheck frequently.
2. Ascertain that the bolt and nut threads are clean and dry (unless otherwise specified by the manufacturers.) If the bolt or nut is required to be lubricated prior to tightening, the torque range should be reduced 50 percent.
3. Use a bolt long enough to prevent bearing loads on the threads. The complete chamfer or end radius of the bolt or screw must extend through the nut.
4. Unique torques specified in the text of this manual supercede the torques given in Charts 2 and 2A.
5. Refer to the latest revision of Lycoming Service Table Limits, SSP1776, for torques on parts used on Lycoming engines.
6. A maximum of two AN960 washers may be added under bolt heads or nuts to correct for variations in material thickness within the tolerances permitted.
7. Self-Locking Fasteners - Limitations of the use of self-locking nuts, bolts and screws including fasteners with non-metallic inserts are as follows:
   a. Fasteners incorporating self-locking devices shall not be reused if they can be run-up using only fingers. They may be reused if hand tools are required to required to run them up providing there is no obvious damage to the self-locking device prior to installation.
   b. Bolts 5/16 inch diameter and over with cotter pin holes may be used with self-locking nuts. Nuts with non-metallic locking devices may be used in this application only if the bolts are free from burrs around the cotter pin hole.
   c. Do not use self-locking nuts at joints which subject either the nut or bolt to rotate.
   d. Never tap or rethread self-locking fasteners. Do not use nuts, bolts or screws with damaged threads or rough ends.

CHART 2A
FRICTION DRAG TORQUE FOR GIVEN BOLTS

BOLT SIZE	FRICTION DRAG TORQUE (IN. -LB.)
8 (course thread)	15
10	18
1/4	30
5/16	60
3/8	80
7/16	100

CHART 2
RECOMMENDED NUT TORQUES
(Sheet 1 of 2)

COARSE THREAD SERIES

	BOLTS Steel Tension			
	AN 3 THROUGH AN 20 AN 42 THROUGH AN 49 AN 73 THROUGH AN 81 AN 173 THROUGH AN 186 MS 20033 THROUGH MS 20046 MS 20073 MS 20074 AN 509 NK9 MS 24694 AN 525 NK525 MS 27039			
	NUTS			
	Steel Tension		Steel Shear	
	AN 310 AN 315 AN 363 AN 365 NAS 1021 MS 17825 MS 21045 MS 20365 MS 20500 NAS 679		AN 320 AN 364 NAS 1022 MS 17826 MS 20364	
Nut-bolt size	Torque Limits in-lbs.		Torque Limits in-lbs.	
	Min.	Max.	Min.	Max.
8-32	12	15	7	9
10-24	20	25	12	15
1/4-20	40	50	25	30
5/16-18	80	90	48	55
3/8-16	160	185	95	110
7/16-14	235	255	140	155
1/2-13	400	480	240	290
9/16-12	500	700	300	420
5/8-11	700	900	420	540
3/4-10	1,150	1,600	700	950
7/8-9	2,200	3,000	1,300	1,800
1-8	3,700	5,000	2,200	3,000
1-1/8-8	5,500	6,500	3,300	4,000
1-1/4-8	6,500	8,000	4,000	5,000

CHART 2
RECOMMENDED NUT TORQUES (Sheet 2 of 2)

FINE THREAD SERIES

	BOLTS Steel Tension		BOLTS Steel Tension		BOLTS Aluminum	
	AN 3 THRU AN 20 AN 42 THRU AN 49 AN 73 THRU AN 81 AN 173 THRU AN 186 MS 20033 THRU MS 20046 MS 20073 MS 20074 AN 509 NK9 MS 24694 AN 525 NK525 MS 27039		MS 20004 THRU MS 20024 NAS 144 THRU NAS 158 NAS 333 THRU NAS 340 NAS 583 THRU NAS 590 NAS 624 THRU NAS 644 NAS 1303 THRU NAS 1320 NAS 172 NAS 174 NAS 517		AN 3DD THRU AN 20DD AN 173DD THRU AN 186DD AN 509DD AN 525D MS 27039D MS 24694DD	
			Steel shear bolt NAS 464			
	NUTS Steel Tension	NUTS Steel Shear	NUTS Steel Tension	NUTS Steel Shear	NUTS Alum. Tension	NUTS Alum. Shear
	AN 310 AN 315 AN 363 AN 365 NAS 1021 MS 17825 MS 21045 MS 20365 MS 20500 NAS 679	AN 320 AN 364 NAS 1022 MS 17826 MS 20364	AN 310 AN 315 AN 363 AN 365 MS 17825 MS 20365 MS 21045 NAS 1021 NAS 679 NAS 1291	AN 320 AN 364 NAS 1022 MS 17826 MS 20364	AN 365D AN 310D NAS 1021D	AN 320D AN 364D NAS 1022D

Nut-bolt size	Torque Limits in-lbs.		Torque Limits in-lbs.		Torque Limits in-lbs.		Torque Limits in-lbs.		Torque Limits in-lbs.		Torque Limits in-lbs.	
	Min.	Max.	Min.	Max.	Min.	Max.	Min.	Max.	Min.	Max.	Min.	Max.
8-36	12	15	7	9					5	10	3	6
10-32	20	25	12	15	25	30	15	20	10	15	5	10
1/4-28	50	70	30	40	80	100	50	60	30	45	15	30
5/16-24	100	140	60	85	120	145	70	90	40	65	25	40
3/8-24	160	190	95	110	200	250	120	150	75	110	45	70
7/16-20	450	500	270	300	520	630	300	400	180	280	110	170
1/2-20	480	690	290	410	770	950	450	550	280	410	160	260
9/16-18	800	1,000	480	600	1,100	1,300	650	800	380	580	230	360
5/8-18	1,100	1,300	660	780	1,250	1,550	750	950	550	670	270	420
3/4-16	2,300	2,500	1,300	1,500	2,650	3,200	1,600	1,900	950	1,250	560	880
7/8-14	2,500	3,000	1,500	1,800	3,550	4,350	2,100	2,690	1,250	1,900	750	1,200
1-14	3,700	4,500	2,200	3,300	4,500	5,500	2,700	3,300	1,600	2,400	950	1,500
1-1/8-12	5,000	7,000	3,000	4,200	6,000	7,300	3,600	4,400	2,100	3,200	1,250	2,000
1-1/4-12	9,000	11,000	5,400	6,600	11,000	13,400	6,600	8,000	3,900	5,600	2,300	3,650

CHART 3
DECIMAL CONVERSIONS

4ths	8ths	16ths	32nds	64ths	TO 3 PLACES	TO 2 PLACES	M.M. EQUIV
				1/64	.016	.02	.397
			1/32		.031	.03	.794
				3/64	.047	.05	1.191
		1/16			.062	.06	1.587
				5/64	.078	.08	1.984
			3/32		.094	.09	2.381
				7/64	.109	.11	2.778
	1/8				.125	.12	3.175
				9/64	.141	.14	3.572
			5/32		.156	.16	3.969
				11/64	.172	.17	4.366
		3/16			.188	.19	4.762
				13/64	.203	.20	5.159
			7/32		.219	.22	5.556
				15/64	.234	.23	5.593
1/4					.250	.25	6.350
				17/64	.266	.27	6.747
			9/32		.281	.28	7.144
				19/64	.297	.30	7.540
		5/16			.312	.31	7.937
				21/64	.328	.33	8.334
			11/32		.344	.34	8.731
				23/64	.359	.36	9.128
	3/8				.375	.38	9.525
				25/64	.391	.39	9.922
			13/32		.406	.41	10.319
				27/64	.422	.42	10.716
		7/16			.438	.44	11.112
				29/64	.453	.45	11.509
			15/32		.469	.47	11.906
				31/64	.484	.48	12.303
					.500	.50	12.700

4ths	8ths	16ths	32nds	64ths	TO 3 PLACES	TO 2 PLACES	M.M. EQUIV
				33/64	.516	.52	13.097
			17/32		.531	.53	13.494
				35/64	.547	.55	13.891
		9/16			.562	.56	14.288
				37/64	.578	.58	14.684
			19/32		.594	.59	15.081
				39/64	.609	.61	15.478
	5/8				.625	.62	15.875
				41/64	.641	.64	16.272
			21/32		.656	.66	16.669
				43/64	.672	.67	17.065
		11/16			.688	.69	17.462
				45/64	.703	.70	17.859
			23/32		.719	.72	18.256
				47/64	.734	.73	18.653
3/4					.750	.75	19.050
				49/64	.766	.77	19.447
			25/32		.781	.78	19.844
				51/64	.797	.80	20.241
		13/16			.812	.81	20.637
				53/64	.828	.83	21.034
			27/32		.844	.84	21.431
				55/64	.859	.86	21.828
	7/8				.875	.88	22.225
				57/64	.891	.89	22.622
			29/32		.906	.91	23.019
				59/64	.922	.92	23.416
		15/16			.938	.94	23.812
				61/64	.953	.95	24.209
			31/32		.969	.97	24.606
				63/64	.984	.98	25.003
					1.000	1.00	25.400

CHART 4
CONVERSION TABLES (Sheet 1 of 5)

1. These charts contain the various conversion data that may be useful when figuring capacities, lengths, temperatures, and various weights and measures from the English system values to the metric system values or back again.

2. The English system is in use by England and the United States. All other countries use the metric system .

3. Procedure for Converting Inches to Millimeters. (Refer to Chart 4, Sheet 4)

   a. Example: Convert 1.5 inches to millimeters.

      (1) Read down inches column to 1. inches.
      (2) Read across top inch column to 0.5.
      (3) Read down and across to find millimeters (1.5 inches is 38.10 millimeters).

4. Procedure for Converting Fahrenheit (°F) and Celsius (°C) (Centigrade) Temperature. (Refer to Chart 4, Sheet 2).

   a. Read number in middle column, if in degrees Celsius (°C), read Fahrenheit equivalent in right-hand column. If in degrees Fahrenheit (°F). read Celsius equivalent in left-hand column.

      (1) 70°F = 21.11°C.
      (2) 30° C = 86.0° F.

CHART 4
CONVERSION TABLES (Sheet 2 of 5)

CENTIGRADE - FAHRENHEIT CONVERSION TABLE

Example: To convert 20°C, to Fahrenheit, find 20 in the center column headed (°F - °C); then read 68.0°F, in the column (°F) to the right. To convert 20°F, to Centigrade; find 20 in the center column and read -6.67°C, in the (°C) column to the left.

°C	°F - °C	°F	°C	°F - °C	°F
-56.7	-70	-94.0	104.44	220	428.0
-51.1	-60	-76.0	110.00	230	446.0
- 45.6	-50	-58.0	115.56	240	464.0
- 40.0	-40	-40.0	121.11	250	482.0
- 34.0	-30	-22.0	126.67	260	500.0
- 38.9	-20	-4.0	132.22	270	518.0
- 23.3	-10	14.0	137.78	280	536.0
- 17.8	0	32.0	143.33	290	554.0
-12.22	10	50.0	148.89	300	572.0
-6.67	20	68.0	154.44	310	590.0
-1.11	30	86.0	160.00	320	608.0
4.44	40	104.0	165.56	330	626.0
10.00	50	122.0	171.11	340	644.0
15.56	60	140.0	176.67	350	662.0
21.11	70	158.0	182.22	360	680.0
26.67	80	176.0	187.78	370	698.0
32.22	90	194.0	193.33	380	716.0
27.78	100	212.0	198.89	390	734.0
43.33	110	230.0	204.44	400	752.0
38.89	120	248.0	210.00	410	770.0
54.44	130	266.0	215.56	420	788.0
60.00	140	284.0	221.11	430	806.0
65.56	150	302.0	226.67	440	824.0
71.00	160	320.0	232.22	450	842.0
76.67	170	338.0	257.78	460	860.0
82.22	180	356.0	243.33	470	878.0
87.78	190	374.0	248.89	480	896.0
93.33	200	392.0	254.44	490	914.0
98.89	210	410.0	260.00	500	932.0

CHART 4
CONVERSION TABLES (Sheet 3 of 5)

MULTIPLY	BY	TO OBTAIN
CENTIMETERS	0.3937 0.03281	IN. FT.
CU. CENTIMETERS	0.001 0.06102 0.0002642	LITERS CU. IN U.S. GAL.
CU. FT.	28.320 1.728 7.481 28.32	CU. CM CU. IN. U.S. GAL. LITERS
CU. IN.	16.39 0.01639 0.004329 0.01732	CU. CM LITERS U.S. GAL. QUARTS
CU. METERS	1000000 35.314 61.023 264.17 999.97	CU. CM CU. FT. CU. IN GAL. LITERS
FEET	0.3048 12.000 304.8 0.3333	METERS MILS MM. YARDS
FT.-LB.	0.1383 0.001285 0.000000376	M-KG BTU KW-HR
FLUID OZ.	8 29.6	DRAM CU. CM
GAL., IMPERIAL	277.4 1.201 4.546	CU. IN. U.S. GAL. LITERS
GAL., U.S. DRY	268.8 0.1556 1.164 4.405	CU. IN. CU. FT. U.S. GAL., LIQ. LITERS
GAL., U.S. LIQ.	231.0 0.1337 3.785 0.8327 128	CU. IN. CU. FT. LITERS IMPERIAL GAL. FLUID OZ.
IN.	2.540 .08333	CM. FT.
JOULES	0.000948 0.7376	BTU FT.-LB.

MULTIPLY	BY	TO OBTAIN
KILOGRAMS	2.205 35.27 1000	LB. OZ. GRAMS
LITERS	1000 61.03 0.03532 0.2642 0.22 1.057	CU. CM. CU. IN. CU. FT. U.S. GAL. IMPERIAL GAL. QUARTS
METERS	39.37 3.281 1000	IN. FT. MM.
METER-KILOGRAM	7.233 9.807	FT.-LB. JOULES
OUNCES, AVDP	0.0625 28.35 437.5	LB., AVDP GRAMS GRAINS
OUNCES, FLUID	29.57 1.805	CU. CM. CU. IN.
LB., AVDP	453.6 7000 16.0	GRAMS GRAINS OUNCES
SQUARE INCH	6.4516	SQ. CM.
POUND PER SQUARE INCH (PSI)	0.0703	KG.-CM SQUARED
STATUTE MILE	1.609 0.8684	KILOMETER NAUTICAL MILE
NAUTICAL MILE	1.151	STATUTE MILE
QUART	.9463	LITER
MILLIMETER	1000	MICRON
MICRON	0.001 0.000039	MILLIMETER INCH
INCH POUNDS	11.521	METER GRAMS
INCH OUNCES	0.72	METER GRAMS
POUNDS	0.453	KILOGRAMS

CHART 4
CONVERSION TABLES (Sheet 4 of 5)

INCHES TO MILLIMETER

INCHES	0.0000	0.0001	0.0002	0.0003	0.0004	0.0005	0.0006	0.0007	0.0008	0.0009
					MILLIMETER					
0.000		0.0025	0.0050	0.0076	0.0101	0.0127	0.0152	0.0177	0.0203	0.0228
0.001	0.0254	0.0279	0.0304	0.0330	0.0355	0.0381	0.0406	0.0431	0.0457	0.0482
0.002	0.0508	0.0533	0.0558	0.0584	0.0609	0.0635	0.0660	0.0685	0.0711	0.0736
0.003	0.0762	0.0812	0.0838	0.0863	0.0889	0.0914	0.0939	0.0965	0.0965	0.0990
0.004	0.1016	0.1041	0.1066	0.1092	0.1117	0.1143	0.1168	0.1193	0.1219	0.1244
0.005	0.1270	0.1295	0.1320	0.1346	0.1371	0.1397	0.1422	0.1447	0.1447	0.1498
0.006	0.1524	0.1549	0.1574	0.1600	0.1625	0.1651	0.1676	0.1701	0.1727	0.1752
0.007	0.1778	0.1803	0.1828	0.1854	0.1879	0.1905	0.1930	0.1955	0.1981	0.2006
0.008	0.2032	0.2057	0.2082	0.2108	0.2133	0.2159	0.2184	0.2209	0.2235	0.2260
0.009	0.2286	0.2311	0.2336	0.2362	0.2387	0.2413	0.2438	0.2463	0.2489	0.2514

INCHES	0.000	0.001	0.002	0.003	0.004	0.005	0.006	0.007	0.008	0.009
					MILLIMETER					
0.00		0.025	0.050	0.076	0.101	0.127	0.152	0.177	0.203	0.228
0.01	0.254	0.279	0.304	0.330	0.355	0.381	0.406	0.431	0.457	0.482
0.02	0.508	0.533	0.558	0.584	0.609	0.635	0.660	0.685	0.711	0.736
0.03	0.762	0.787	0.812	0.838	0.863	0.889	0.914	0.939	0.965	0.990
0.04	1.016	1.041	1.066	1.092	1.117	1.143	1.168	1.193	1.219	1.244
0.05	1.270	1.295	1.320	1.346	1.371	1.397	1.422	1.447	1.473	1.498
0.06	1.524	1.549	1.574	1.600	1.625	1.651	1.676	1.701	1.727	1.752
0.07	1.778	1.803	1.828	1.854	1.879	1.905	1.930	1.955	1.981	2.006
0.08	2.032	2.057	2.082	2.108	2.133	2.159	2.184	2.209	2.235	2.260
0.09	2.286	2.311	2.336	2.362	2.387	2.413	2.438	2.463	2.489	2.514

INCHES	0.00	0.01	0.02	0.03	0.04	0.05	0.06	0.07	0.08	0.09
					MILLIMETER					
0.0		0.254	0.508	0.762	0.016	1.270	1.524	1.778	2.032	2.286
0.1	2.540	2.794	3.048	3.302	3.556	3.810	4.064	4.318	4.572	4.826
0.2	5.080	5.334	5.558	5.842	6.096	6.350	6.604	6.858	7.112	7.366
0.3	7.620	7.874	8.128	8.382	8.636	8.890	9.144	9.398	9.652	9.906
0.4	10.160	10.414	10.668	10.922	11.176	11.430	11.684	11.938	12.192	12.446
0.5	12.700	12.954	13.208	13.462	13.716	13.970	14.224	14.478	14.732	14.986
0.6	15.240	15.494	15.748	16.002	16.256	16.510	16.764	17.018	17.272	17.526
0.7	17.780	18.034	18.288	18.542	18.796	19.050	19.304	19.558	19.812	20.066
0.8	20.320	20.574	20.828	21.082	21.336	21.590	21.844	22.098	22.352	22.606
0.9	22.860	23.114	23.368	23.622	23.876	24.130	24.384	24.638	24.892	25.146

INCHES	0.00	0.1	0.2	0.3	0.4	0.5	0.6	0.7	0.8	0.9
					MILLIMETER					
0.		2.54	5.08	7.62	10.16	12.70	15.24	17.78	20.32	22.86
1.	25.40	27.94	30.48	33.02	35.56	38.10	40.64	43.18	45.72	48.26
2.	50.80	53.34	55.88	58.42	60.96	63.50	66.04	68.58	71.12	73.66
3.	76.20	78.74	81.28	83.82	86.36	88.90	91.44	93.98	96.52	99.06
4.	101.60	104.14	106.68	109.22	111.76	114.30	116.84	119.38	121.92	124.46
5.	127.00	129.54	132.08	134.62	137.16	139.70	142.24	144.78	147.32	149.86
6.	152.40	154.94	157.48	160.02	162.56	165.10	167.64	170.18	172.72	175.26
7.	177.80	180.34	182.88	185.42	187.96	190.50	193.04	195.58	198.12	200.66
8.	203.20	205.74	208.28	210.82	213.36	215.90	218.44	220.98	223.52	226.06
9.	228.60	231.14	233.68	236.22	238.76	241.30	243.84	246.38	248.92	251.46

–NOTE–

See Chart 4, Sheet 1 for instructions on how to use this chart.

CHART 4
CONVERSION TABLES (Sheet 5 of 5)

Decimal/Millimeter Equivalents of Drill Sizes From 1/2" to No. 80

Size	Decimal Equiv.	Millimeter Equiv.	Size	Decimal Equiv.	Millimeter Equiv.	Size	Decimal Equiv.	Millimeter Equiv.	Size	Decimal Equiv.	Millimeter Equiv.
1/2	0.500	12.7000	G	0.261	6.6294	5/32	0.1562	3.9687	51	0.067	1.7018
31/64	0.4843	12.3031	F	0.257	6.5278	23	0.154	3.9116	52	0.0635	1.6129
15/32	0.4687	11.9062	E-1/4	0.250	6.3500	24	0.152	3.8608	1/16	0.0625	1.5875
29/64	0.4531	11.5094	D	0.246	6.2484	25	0.1495	3.7973	53	0.0595	1.5113
7/16	0.4375	11.1125	C	0.242	6.1468	26	0.147	3.7338	54	0.055	1.397
27/64	0.4218	10.7156	B	0.238	6.0452	27	0.144	3.6576	55	0.052	1.3208
Z	0.413	10.4902	15/64	0.2343	5.9531	9/64	0.1406	3.5719	3/64	0.0468	1.1906
13/32	0.4062	10.3187	A	0.234	5.9436	28	0.1405	3.5687	56	0.0465	1.1811
Y	0.404	10.2616	1	0.228	5.7912	29	0.136	3.4544	57	0.043	1.0922
X	0.397	10.0838	2	0.221	5.6134	30	0.01285	3.2639	58	0.042	1.0668
25/64	0.3906	9.9212	7/32	0.2187	5.5562	1/8	0.125	3.1750	59	0.041	1.0414
W	0.386	9.8044	3	0.213	5.4102	31	0.120	3.048	60	0.040	1.016
V	0.377	9.5758	4	0.209	5.3086	32	0.116	2.9464	61	0.039	0.9906
3/8	0.375	9.5250	5	0.2055	5.2197	33	0.113	2.8702	62	0.038	0.9652
U	0.368	9.3472	6	0.204	5.1816	34	0.111	2.8194	63	0.037	0.9398
23/64	0.3593	9.1262	13/64	0.2031	5.1594	35	0.110	2.794	64	0.036	0.9144
T	0.358	9.1281	7	0.201	5.1054	7/64	0.1093	2.7781	65	0.035	0.899
S	0.346	8.7884	8	0.199	5.0546	36	0.1065	2.7051	66	0.033	0.8382
11/32	0.3437	8.7300	9	0.196	4.9784	37	0.104	2.6416	1/32	0.0312	0.7937
R	0.339	8.6106	10	0.1935	4.9149	38	0.1015	2.5781	67	0.032	0.8128
Q	0.332	8.4328	11	0.191	4.8514	39	0.0995	2.5273	68	0.031	0.7874
21/64	0.3281	8.3337	12	0.189	4.8006	40	0.098	2.4892	69	0.029	0.7366
P	0.323	8.2042	3/16	0.1875	4.7625	41	0.096	2.4384	70	0.028	0.7112
O	0.316	8.0264	13	0.185	4.699	3/32	0.0937	2.3812	71	0.026	0.6604
5/16	0.3125	7.9375	14	0.182	4.6228	42	0.0935	2.3749	72	0.025	0.635
N	0.302	7.6708	15	0.180	4.572	43	0.089	2.2606	73	0.024	0.0696
19/64	0.2968	7.5387	16	0.177	4.4958	44	0.086	2.1844	74	0.0229	0.58166
M	0.295	7.4930	17	0.173	4.3942	45	0.082	2.0828	75	0.021	0.5334
L	0.290	7.3660	11/64	0.1718	4.3656	46	0.081	2.0574	76	0.020	0.508
9/32	0.2812	7.1425	18	0.1695	4.3053	47	0.0785	1.9939	77	0.018	0.4572
K	0.281	7.1374	19	0.166	4.2164	5/64	0.0781	1.9844	1/64	0.0156	0.3969
J	0.277	7.0358	20	0.161	4.0894	48	0.076	1.9304	78	0.016	0.4064
I	0.272	6.9088	21	0.159	4.0386	49	0.073	1.8542	79	0.0145	0.3683
H	0.266	6.7564	22	0.157	3.9878	50	0.070	1.778	80	0.0135	0.3429
17/64	0.2656	6.7462									

DRILL SIZES AVAILABLE

Drill may be obtained in regular sizes to a 4 inch diameter, and increase in 64ths of an inch. The regular metric drills vary from 2 to 76mm and increase in 0.5mm variations.

CHART 5
LIST OF CONSUMABLE MATERIALS (Sheet 1 of 9)

MATERIAL	SPECIFICATION	PRODUCT	VENDOR
ABS-Solvent/ Cements		Solarite, #11 Series	Solar Compounds Corp.
Adhesive		EC 801 EC 807 EC 1357 Scotch Grip 210 (Rubber Adhesive)	Minnesota Mining and Manufacturing Adhesive Coating and Sealers Division
Anti-Galling Solution	MIL-A-907	Ease-Off	Taxacone Company
Anti-Seize Compound (Graphite Petrolatum)	MIL-T-5544	Armite Product	Armite Laboratories
		Anti-Seize Compound	Exxon Oil Company
		Royco 44	Royal Lubricants Co.
Anti-Seize Compound (White Lead Base)	TT-A-580 (JAN-A-669)	Armite Product	Armite Laboratories
Anti-Seize Thread Compound “HIGH TEMPERATURE”		Fel-Pro C5-A	Fel-Pro Incorporated
Buffing and Rubbing Compounds		Automotive Type DuPont #7	DuPont Company
		Ram Chemical #69	Ram Chemicals
Compound for Polishing		Mirror Glaze	Mirror Bright Polish Co., Incorporated
Plexiglas Polish and Cleaner	P-P-560	Part Number 403D	Permatex Co., Inc. Kansas City, Kansas 66115
Cleaners		Fantastic Spray Perchlorethylene VM&P Naphtha (Lighter Fluid)	Local Supplier
Deicer Boot Surface Coatings		Agemaster	B.F. Goodrich
Dry Lubricant	MIL-L-60326	MS-122-6075	Local Supplier

CHART 5
LIST OF CONSUMABLE MATERIALS (Sheet 2 of 9)

MATERIAL	SPECIFICATION	PRODUCT	VENDOR
Epoxy Patching Compound		Solarite #400	Solar Compounds Corp.
Gasket Cement		Permatex No. 2	Permatex Company, Inc.
Grease, Actuator		2196-74-1	Dukes Astronautics Co.
Grease, Aircraft Instrumentation, Gear and Actuator Screw (Temp. Range - (100°F to +250°F)	MIL-G-23827A (See Note 1)	Supermil Grease No. A72832	Amoco
		Royco 27A	Royal Lubricants Co.
		Shell 6249 Grease	Shell Oil Company
		RR-28	Socony Mobil Oil Co.
		Castrolease A1	Burmah-Castrol LTD.
		Low-Temp. Grease E.P.	Texaco Incorp.
		5114 E.P. Grease AV55	Standard Oil of Calif.
		Aeroshell Grease 7 Braycote 627S	Shell Oil Company
		Mobil Grease 27	Mobil Oil Corporation
Grease, Aircraft Instrumentation, Gear and Actuator Screw (Temp. Range - 65°F to +250°F)	MIL-G-3278	B.P. Aero Grease 31B Unitemp E.P.	B.P. Trading Limited Texaco Incorporated
		RPM Aviation Grease 5, Supermil Grease No. 8723	Standard Oil of Calif.
		Aeroshell Grease 7A	Shell Oil Corporation
		Royco 78	Royal Lubricants Company
		L-1212	Sinclair Refining Co.
		1916 Uni-Temp Grease	California Texas Oil Corporation

CHART 5
LIST OF CONSUMABLE MATERIALS (Sheet 3 of 9)

MATERIAL	SPECIFICATION	PRODUCT	VENDOR
Grease Ball and Roller Bearing	MIL-G-18709	Regal ASB-2 Formula TG-10293	Texaco Incorporated
		Andok B	Exxon Company, U.S.A.
		Code 1-20481, Darina Grease 1 XSG-6213 Code 71-501, Darina Grease 2 XSG-6152 Code 71-502, Alvania Grease 2 XSG-6151 Code 71-012, Cyprina Grease 3 XSG-6280 Code 71-003	Shell Oil Company
Grease, General Purpose Wide Temperature	MIL-G-81322	Marfax All Purpose	Texaco Incorporated
		Aeroshell No. 6	Shell Oil Company
		Mobil Grease 77 or Mobilux EP2	Mobil Oil Corporation
		Shell Alvania EP2	Shell Oil Company
		Royco 22	Royal Lubricants Company
		Mobil Grease 28	Mobil Oil Corporation
		Aeroshell No. 22	Shell Oil Company
Grease, High Temperature	MIL-G-3545	High Temp. Grease, Marfak All Purpose	Texaco Incorporated
		Shellaire Grease HT Alvania E.P. Grease 2 Aeroshell Grease 5	Shell Oil Company
		Grease 77, Mobilux E.P. 2	Mobil Oil Corporation
		Royco 45A	Royal Lubricants Co.
		L-1231	Sinclair Refining Company

CHART 5
LIST OF CONSUMABLE MATERIALS (Sheet 4 of 9)

MATERIAL	SPECIFICATION	PRODUCT	VENDOR
Grease, Aircraft General Purpose	MIL-G-7711	Regal AFB2 Regal Starfak Premium	Texaco Incorporated
		PED 3040	Standard Oil of Calif.
		Aeroshell Grease 6	Shell Oil Company
		Royco II	Royal Lubricants Company
Grease, Lubricating, Molybdenum Disulfide, Low and High Temperature	MIL-G-21164	Aeroshell Grease No. 17	Shell Oil Company
		Royco 64C	Royal Lubricants Co.
		Castrolease MSA (c)	Burmah Castrol LTD.
Grease, Lubricating, Plug Valve, Gasoline and Oil Resistant	MIL-G-6032	Royco 32	Royal Lubricant Company
		Castrolease PV	Burmah Castrol LTD.
		Parker Fuel Lube 44	Parker Seal Company
		B.P. Aero Grease 32	B.P. Trading Limited
		L-237	Lehigh Tenneco Chemicals Co., Inc.
		Rockwell 950	Rockwell International
Grease, Waterproof, High and Low Temperature		Aero Lubriplate	Fiske Brothers Refining Company
"Hot Melt" Adhesive Polyamids and "Hot Melt" Gun.	Stick Form 1/2 in. diameter, 3 in. long		Sears, Roebuck and Company or most hardware stores.
Hydraulic Fluid	MIL-H-5606	Brayco 756D	Bray Oil Company
		TL-5874	Texaco Incorporated
		PED 3565	Standard Oil Company of California

CHART 5
LIST OF CONSUMABLE MATERIALS (Sheet 5 of 9)

MATERIAL	SPECIFICATION	PRODUCT	VENDOR
Hydraulic Fluid (continued)	MIL-H-5606	Aircraft Hydraulic Oil AA	Texaco Incorporated
		RPM Aviation Oil No. 2 Code PED 2585 PED 3337	Standard Oil Company of California
		Aeroshell Fluid 4, SL-7694	Shell Oil Company
		Aero HF	Mobil Oil Corporation
		Royco 756, 756A and 756B	Royal Lubricants Co.
Isopropyl Alcohol	Fed. Spec. TT-I-735		Local Supplier
Isocryl Tape	(PMS-C1012-2)		Schnee Moorehead Chemicals, Incorporated
Kevlar		Kevlar	Kevlar Special Products
Leak Detector Solution for Oxygen Systems	MIL-L-25567	ALPHA 73 Oxygen Leak Detector Type 1	U.S. Gulf Corporation
		Leak Tec #16-OX	American Gas and Chemical Co. LTD.
Loctite	MIL-S-22473 Grade AA	Loctite 290	Loctite Corporation
	MIL-S-22473 Grade H and HV	Loctite 222	
Methylethylketone	Fed. Spec. TT-M-261		Local Supplier
Molybdenum Disulfide	MIL-M-7866	Molykote-Type G (Paste)	Dow Corning Corp.
		Molykote - Type 2 (Powder)	

CHART 5
LIST OF CONSUMABLE MATERIALS (Sheet 6 of 9)

MATERIAL	SPECIFICATION	PRODUCT	VENDOR
Oil, Air Conditioner		Frigidaire #525	Virginia Chemical
		Suniso #5	Sun Oil Company of Pennsylvania
		Texaco Capilla "E"	Texaco Incorporated
Oil Lubricating, General Purpose, Low Temperature	MIL-L-7870	Caltex Low Temp. Oil	Caltex Oil Products Company
		Sinclair Aircraft Orbit Lube	Sinclair Refining Company
		1692 Low Temp Oil	Texaco Incorporated
		Aviation Instrument Oil	Standard Oil Company of California
		Royco 363	Royal Lubricants Co.
Rain Repellent	FSCM 50150	Repcon	Unelco Corporation
Safety Walk Pressure Sensitive		Flextred 300	Wooster Products, Incorporated
Sealant	MIL-S-11031B	PRC 5000 PRC 383 PRC 307	Products Research Company
Sealant, Fuel Tank Sealing		RS-36b, Stripper (thin)	CEE BEE Chemical Co.
		RS-24b, Stripper (thick)	
		PR 1422 A-2 Sealant (Brushing Consistency)	Products Research Company
		PR 1422 B-2 Sealant (Trowling Consistency)	
		PR 1431G, Faying Surface Seal, Type 1	

CHART 5
LIST OF CONSUMABLE MATERIALS (Sheet 7 of 9)

MATERIAL	SPECIFICATION	PRODUCT	VENDOR
Sealant, Fuel Tank Sealing(continued)		PR 1321-B 1/2, Access Panel Sealant	
		PR 1560 MK, Primer (Anti-Bacteriological Coating)	Products Research Company
		BJO-0930, Phenolic Balloons	Union Carbide Plastics Division
		ERL-2795, Epoxy Resin	
		22LA-0340 Polyamid Hardener	
Sealant, Fuselage Structure	Class A-1/2, A-2, B-2 B-4, B-6, B-8		H.S. Bancroft Corp.
		EC 1239	Minnesota Mining and Manufacturing Industrial Specialties Division
		EC 612 (Leak Marker or Weatherstripping, etc)	
		G.E.-SS-4004 (Primer) RTV-88 with RTV-9811	General Electric Silicone Products Department
Windshield	MIL-S-7502B B-1/4, B-1/2, B-2, B-4, B-8, B-12	PR 1221	Products Research Company
		PR 1425	
Sealing Compound, Gasket and Joint		Tite-Seal	Radiator Specialty Co.
Sealer		PR 1321 B-1/2	Products Research Company

CHART 5
LIST OF CONSUMABLE MATERIALS (Sheet 8 of 9)

MATERIAL	SPECIFICATION	PRODUCT	VENDOR
Silicone Compound	MIL-S-8660 (MIL-C-21567)	DC-4, DC-6 Compound	Dow Corning
		G-624	General Electric Co. Silicone Products Department
Solvents		Methylethyl Ketone Methylene Chloride Acetone	Local Suppliers
		Y2900	Union Carbide; Plastic Division
	Fed. Spec. PD 680 Type I - Stoddard Solvent		Local Supplier
	Type II - High Temperature		Local Supplier
Propeller Slip Ring Cleaning Solvent		CRC-2-26	Corrosion Reaction Consultants, Inc.
Toluol	TT-M-261		Local Supplier
Trichlorethylene	MIL-T-7003	Perm-A-Clor	Dextrex Chemical Industries, Inc.
		Turco 4217	Turco Products, Inc.
Teflon Tape	.003" x .5" wide/-1		Minnesota Mining and Manufacturing Company
			Shamban W.S. and Co.
	.003" x .25" wide/-2		Johnson & Johnson, Inc. Permacel Division
Thread Sealant for High Pressure Oxygen System	MIL-T-27730	Permacel 412	Johnson & Johnson, Inc. Permacel Division

CHART 5
LIST OF CONSUMABLE MATERIALS (Sheet 9 of 9)

MATERIAL	SPECIFICATION	PRODUCT	VENDOR
Vinyl Foam	1 in. x 1/8 in.	530 Series, Type I	Norton Tape Division
Vinyl, Foam Tape	1/8 in. x 1 in.	501 Series, Type II	Norton Tape Division
Vinyl, Black Plastic	2 in. x 9 mil. and/or 1 1/2 in. x 9 mil.		
Corrosion Retardant Compounds	MIL-C-16173 D (Piper P/N 197-508)	LPS-3 Heavy Duty Rust Inhibitor	Holt Lloyd Corp.
	(Piper P/N 197-509)	Metal Parts Protector Protector Flex	Chemi-Cap. Chemical Packaging Corp.

NOTE: Take precautions when using MIL-G-23827 and engine oil. These lubricants contain chemicals harmful to painted surfaces.

CHART 6
VENDOR INFORMATION (Sheet 1 of 3)

A

American Gas and
Chemical Co. LTD
220 Pegasus Avenue
Northvale, NJ 07647
201-767-7300

Amoco Oil Co.
200 E. Randolph Drive
Chicago, IL 60601
312-856-5111

Armite Laboratories
1845-49 Randolph Street
Los Angeles, CA 90001
213-587-7744

B

BP Trading Limited
Moore Lane
Brittanic House
London E.C. 2
England

Bray Oil Company
1925 N. Marianna Avenue
Los Angeles, CA 98103
213-268-6171

Burmah - Castrol Inc.
30 Executive Avenue
Edison, NJ 08817
201-287-3140

C

California Texas Oil
Corp., 380 Madison Avenue
New York, NY 10017

Caltex Oil Products Co.
New York, NY 10020

CEE BEE Chamical Co.
9520 E. CEE BEE Drive
Box 400
Downey, CA 92041

Chemi-cap
Chemical Packaging Corp.
1100 N.W. 70th Street
Ft. Lauderdale, FL 33309
305-665-9059

Corrosion Reaction
Consultants, Inc.
Limekin Pike
Dresher, PA 19025

D

Dextrex Chemical
P. O. Box 501
Detroit, MI 48232

Dow Corning Corporation
Alpha Molykote Plant
64 Harvard Avenue
Stanford, CT 06902

Dukes Astronautics Co.
7866 Deering Avenue
Canoga Park, CA 91304

DuPont Company
Finishes Div.
DuPont Building
Wilmington, DE 19898
302-774-1000

E

Exxon Oil Company
1251 Avenue of the Americas
New York, NY 10020
212-398-3093

F

Fel-Pro Incorporated
7450 N. McCormick Blvd.
Box C1103
Skokie, IL 60076
312-761-4500

Fiske Brothers
Refining Company
120 Lockwood Street
Newark, NJ 07105
201-589-9510

G

General Electric Co.
Silicone Products Dept.
Waterford, NY 12188
518-237-3330

H

H. S. Bancroft Corp.
One Rockhill
Industrial Park
Cherry Hill, NJ 08003
609-854-8000

Holt Lloyd Corp.
4647 Hugh Howell Rd.
Tucker, GA 30084
404-934-7800

J

Johnson & Johnson, Inc.
Permacel Division
501 George Street
New Brunswick, NJ 08901
201-524-0400

K

Kevlar Special Products
E.I. DuPont de
Nemours & Co., (Inc.)
Textile Fibers
Department
Centre Road Building
Wilmington, DE 19898
302-999-3156

L

Lehigh - Tenneco Chemicals
Co., Inc.
Chestertown, MD 21620
301-778-1991

CHART 6
VENDOR INFORMATION (Sheet 2 of 3)

Loctite Corporation
777 N. Mountain Road
Newington, CT 06111
800-243-8160
In CT 800-842-0225

M

Minnesota Mining and MFG.
3M Center
St. Paul, MN 55144
612-733-1110

Mirror Bright Polish Co., Inc.
Irvine Industrial Complex
P.O. Box 17177
Irvin, CA 92713
714-557-9200

Mobil Oil Corporation
150 E. 42ND Street
New York, NY 10017
212-883-4242

N

Norton Tape Division
Department 6610
Troy, NY 12181
518-273-0100

P

Parker Seal Company
17325 Euclid Avenue
Cleveland, OH 44112
216-531-3000

Permatex Co., Inc.
P.O. Box 11915
Newington, CT 06111
203-527-5211

Products Research Co.
2919 Empire Avenue
Burbank, CA 91504
213-849-3992

R

Radiator Specialty Co.
P.O. Box 34689
Charlotte, NC 28234
704-377-6555

Ram Chemicals
201 E. Alondra Blvd.
Gardena, CA 90248
213-321-0710

Rockwell International
600 Grant Street
Pittsburgh, PA 15219
412-565-2000

Royal Lubricants Company
River Road
E. Hanover, NJ 07936
201-887-3100

S

Schnee Moorhead Chemicals Inc.

Shamban W.S. and Co.
1857 Centinela Avenue
Santa Monica, CA 90404
213-397-2195

Shall Oil Company
One Shell Plaza
Houston, TX 77003
713-220-6697

Sinclair Refining Co.
600 Fifth Avenue
New York, NY 10020

Socony Mobil Oil Co.
Washington 5, DC 20005
Solar Compounds Corp.
1201 W. Blancke Street
Linden, NJ 07036
201-862-2813

Standard Oil of California
225 Bush Street
San Francisco, CA 94104
415-894-7700

Sun Oil Company of Penna.
5 Penn Center Plaza
Philadelphia, PA 19103
215-972-2000

T

Taxacone Company
P.O. Box 10823 TR
Dallas, TX 75208

Texaco, Inc.
2000 Westchester Avenue
White Plains, NY 10650
914-253-4000

Turco Products Inc.
24600 S. Main Street
Box 6200
Carson, CA 90749
213-835-8211

U

U.S. Gulf Corp.
P.O. Box 233
Stoney Brook, NY 11790
212-683-9221

Unelko Corporation
727 E. 110th Street
Chicago, IL 60628

CHART 6
VENDOR INFORMATION (Sheet 3 of 3)

Union Carbide; Plastic Div.
270 Park Avenue
New York, NY 10017
212-551-3763

V

Virginia Chemical
3340 W. Norfolk Rd.
Portsmouth, VA 23703
703-484-5000

W

Wooster Products, Inc.
1000 Spruce Street
Wooster, OH 44691
800-321-4936
In OH 216-264-2844

THIS PAGE INTENTIONALLY LEFT BLANK

CHART 7
ELECTRICAL WIRE CODING

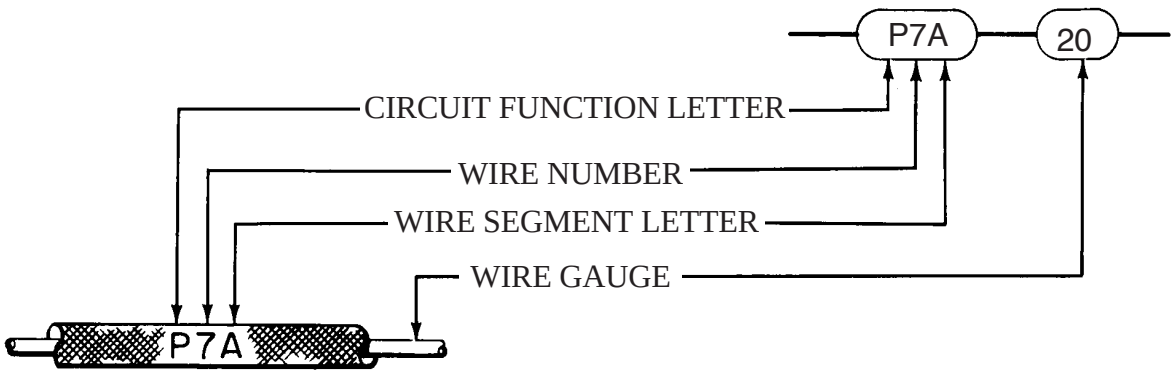

CIRCUIT FUNCTION LETTER	CIRCUITS
A	AUTOPILOT
C	CONTROL SURFACE
E	ENGINE INSTRUMENT
F	FLIGHT INSTRUMENT
G	LANDING GEAR
H	HEATER - VENTILATING & DEICING
L	LIGHTING
P	POWER
Q	FUEL & OIL
RP	RADIO POWER
RZ	RADIO AUDIO
J	IGNITION
W	WARNING
K	STARTER

CHART 8
ELECTRICAL SYMBOLS

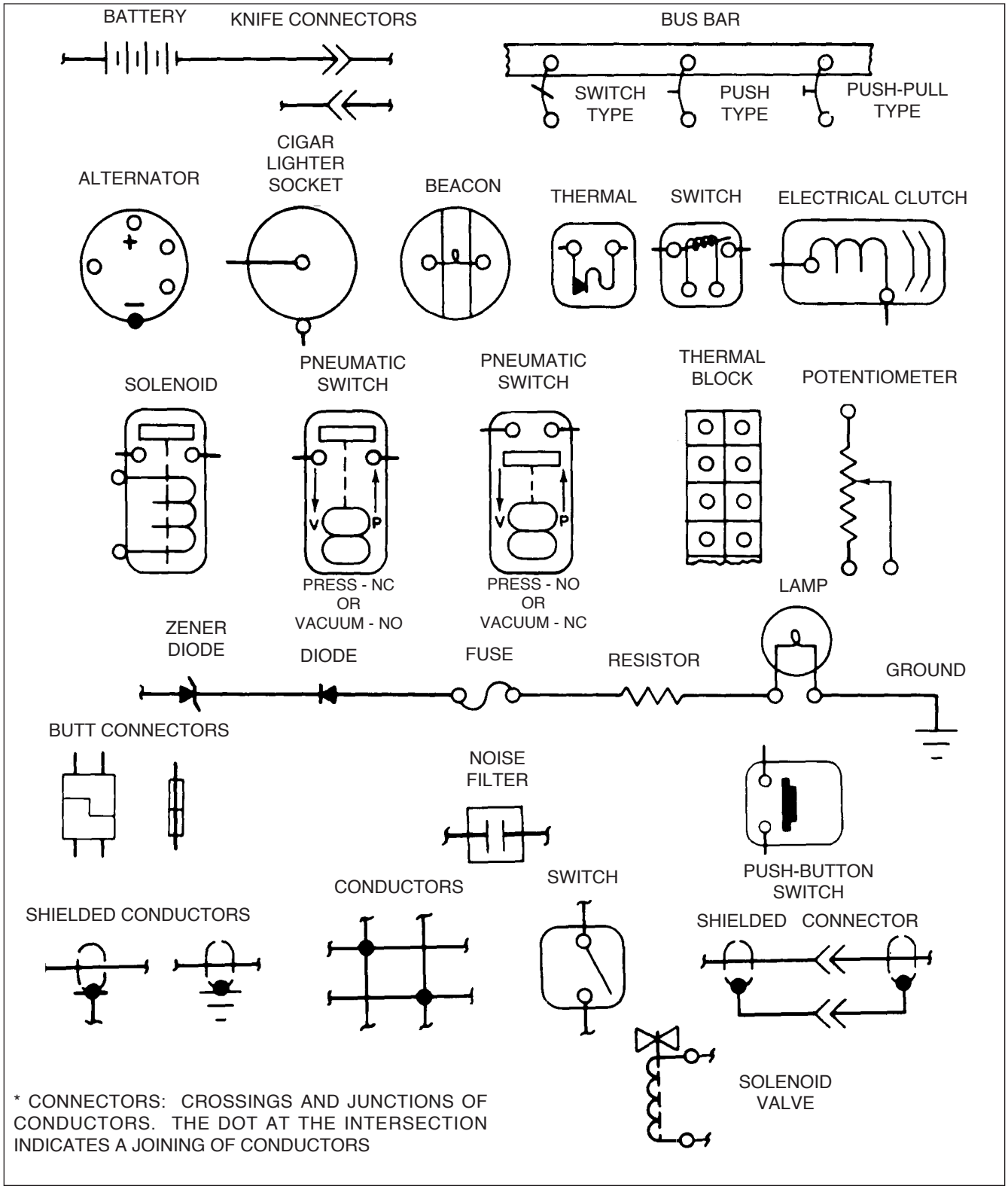

THIS PAGE INTENTIONALLY LEFT BLANK

THIS PAGE INTENTIONALLY LEFT BLANK

ELECTRICAL SCHEMATIC INDEX

FIGURE NO.	SCHEMATIC	GRID NO.
	ANNUNCIATOR SYSTEMS	
	Annunciator Panel	
91-1 (Sheet 1)	PA-32R-301: S/N's 32R-8013001 thru 32R-8013119	4G2
91-1 (Sheet 2)	PA-32R-301: S/N's 32R-8013120 thru 32R-8213071	4G3
91-1 (Sheet 3)	PA-32R-301: S/N's 32R-8313001 and up, 3213001 thru 3213028, 3213030 thru 3213041	4G4
91-1 (Sheet 4)	PA-32R-301: S/N's 3213029 and 3213042 and up	4G5
91-1 (Sheet 5)	PA-32R-301: S/N's 3213029 and 3213042 and up	4G6
91-1 (Sheet 6)	PA-32R-301T: S/N's 32R-8029001 thru 32R-8029121	4G7
91-1 (Sheet 7)	PA-32R-301T: S/N's 32R-8129001 thru 32R-8229068	4G8
91-1 (Sheet 8)	PA-32R-301T: S/N's 32R-8329001 and up	4G9
	COMFORT SYSTEMS	
	Cigar Lighter	
91-2	PA-32R-301/301T	4G10
	CONTROL SYSTEMS	
	Electric Flaps	
91-29 (Sheet 1)	PA-32R-301: S/N's 32R-8513001 and up, 3213001 thru 3213028, 3213030 thru 3213041	
	PA-32R-301T: S/N's 32R-8529001 and up, 3229001 and up	4I18
91-29 (Sheet 2)	PA-32R-301: S/N's 3213029 and 3213042 and up	4I19
	DE-ICE SYSTEMS	
	Lift Detector - Heated	
91-5	PA-32R-301T	4G12
	Pitot Heat	
91-4	PA-32R-301: S/N's 32R-8013001 thru 32R-8013119	
	PA-32R-301T: S/N's 32R-8029001 thru 32R-8029107	4G10
91-4A	PA-32R-301: S/N's 32R-8013120 and up, 3213001 thru 3213028, 3213030 thru 3213041	
	PA-32R-301T: S/N's 32R-8029108 and up	4G10
91-4B	PA-32R-301: S/N's 3213029 and 3213042 and up	4G11
	Propeller De-ice - Two and Three Blade	
91-6	PA-32R-301T	4G13

ELECTRICAL SCHEMATIC INDEX (continued)

FIGURE NO.	SCHEMATIC	GRID NO.
	DE-ICE SYSTEMS (continued)	
	Surface De-ice	
91-7	PA-32R-301T	4G14
	Windshield (Heated Panel)	
91-3	PA-32R-301T	4G10
	ELECTRICAL POWER SYSTEMS	
	Alternator and External Power	
91-8 (Sheet 1)	PA-32R-301: S/N's 32R-8013001 thru 32R-8013119	4G15
91-8 (Sheet 2)	PA-32R-301: S/N's 32R-8013120 thru 32R-8113123	4G16
91-8 (Sheet 3)	PA-32R-301: S/N's 32R-8213001 thru 32R-8213060	4G17
91-8 (Sheet 4)	PA-32R-301: S/N's 32R-8313001 and up, 3213001 thru 3213028, 3213030 thru 3213041	4G18
91-8 (Sheet 5)	PA-32R-301: S/N's 3213029 and 3213042 and up	4G19
91-8 (Sheet 6)	PA-32R-301T: S/N's 32R-8029001 thru 32R-8029121	4G20
91-8 (Sheet 7)	PA-32R-301T: S/N's 32R-8129001 thru 32R-8129114	4G21
91-8 (Sheet 8)	PA-32R-301T: S/N's 32R-8229001 thru 32R-8229068	4G22
91-8 (Sheet 9)	PA-32R-301T: S/N's 32R-8329001 and up	4G23
	Avionics Master / Emergency Bus	
91-9	PA-32R-301/301T (Option)	4G24
91-9A	PA-32R-301: S/N's 3213029 and 3213042 and up	4G24
	Ground Clearance	
91-10 (Sheet 1)	PA-32R-301T: S/N's 32R-8329001 and up (Option)	4H1
91-10 (Sheet 2)	PA-32R-301: S/N's 3213029 and 3213042 and up	4H2
	ENGINE SYSTEMS	
	Starter	
91-11	PA-32R-301T: S/N's 32R-8029001 thru 32R-8029121	4H3
91-11A	PA-32R-301: S/N's 32R-8013001 thru 32R-8013119	4H3
91-11B	PA-32R-301: S/N's 32R-8013120 and up, 3213001 thru 3213028, 3213030 thru 3213041	
	PA-32R-301T: S/N's 32R-8129001 and up	4H3
91-11C	PA-32R-301: S/N's 3213029 and 3213042 and up	4H4

ELECTRICAL SCHEMATIC INDEX (continued)

FIGURE NO.	SCHEMATIC	GRID NO.
	ENVIRONMENTAL SYSTEMS	
	Air Conditioning	
91-12 (Sheet 1)	PA-32R-301: S/N's 32R-8013001 and up, 3213001 thru 3213028, 3213030 thru 3213041	
	PA-32R-301T	4H5
91-12 (Sheet 2)	PA-32R-301: S/N's 3213029 and 3213042 and up	4H6
	Ventilation Blower	
91-13	PA-32R-301: S/N's 32R-8013001 thru 32R-8013139	
	PA-32R-301T: S/N's 32R-8029001 thru 32R-8029121	4H7
91-13A	PA-32R-301: S/N's 32R-8113001 and up, 3213001 thru 3213028, 3213030 thru 3213041	
	PA-32R-301T: S/N's 32R-8129001 and up	4H7
91-13B	PA-32R-301: S/N's 3213029 and 3213042 and up	4H7
	FUEL SYSTEMS	
	Fuel Pump	
91-14	PA-32R-301/301T: Early Models	4H8
91-14A	PA-32R-301/301T: Later Models, not including S/N's 3213029 and 3213042 and up	4H8
91-14B	PA-32R-301: S/N's 3213029 and 3213042 and up	4H8
	INDICATORS	
	Ammeter / Low Voltage Monitor	
91-36	PA-32R-301: S/N's 3213029 and 3213042 and up	4J1
	Annunciator - (See Annunciator Systems)	
	Clock	
91-15	PA-32R-301: S/N's 32R-8013001 thru 32R-8013139	4H9
91-15A	PA-32R-301T: S/N's 32R-8029001 thru 32R-8029121	4H9
91-15B	PA-32R-301: S/N's 32R-8113001 and up, 3213001 thru 3213028, 3213030 thru 3213041	
	PA-32R-301T: S/N's 32R-8129001 and up	4H9
91-15C	PA-32R-301: S/N's 3213029 and 3213042 and up	4H10
	Engine Instruments	
91-16	PA-32R-301: Early Models	4H11
91-16A	PA-32R-301T: Early Models	4H11

ELECTRICAL SCHEMATIC INDEX (continued)

FIGURE NO.	SCHEMATIC	GRID NO.
	INDICATORS (continued)	
	Engine Instruments (continued)	
91-16B	PA-32R-301: Later Models, not including S/N's 3213029 and 3213042 and up	4H12
91-16C	PA-32R-301T: Later Models	4H12
91-16D	PA-32R-301: S/N's 3213029 and 3213042 and up	4H13
91-16E	PA-32R-301: S/N's 3213029 and 3213042 and up	4H13
	Hour Meter	
91-17	PA-32R-301: Not including S/N's 3213029 and 3213042 and up	4H14
91-17A	PA-32R-301T	4H14
91-15C	PA-32R-301: S/N's 3213029 and 3213042 and up	4H10
	Turn and Bank	
91-18	PA-32R-301/301T: Early Models	4H15
91-18A	PA-32R-301: S/N's 32R-8013120 and up, 3213001 thru 3213028, 3213030 thru 3213041	
	PA-32R-301T: S/N's 32R-8029108 and up	4H15
91-18B	PA-32R-301: S/N's 3213029 and 3213042 and up	4H16
	LANDING GEAR SYSTEMS	
	Landing Gear	
91-19 (Sheet 1)	PA-32R-301: S/N's 32R-8013001 thru 32R-8013119	4H17
91-19 (Sheet 2)	PA-32R-301: S/N's 32R-8013120 and up, and 3213001	4H18
91-19 (Sheet 3)	PA-32R-301: S/N's 3213002 thru 3213028, 3213030 thru 3213041	
	PA-32R-301T: S/N's 3229003 and up	4H19
91-19 (Sheet 4)	PA-32R-301: S/N's 3213029 and 3213042 and up	4H20
91-19 (Sheet 5)	PA-32R-301: S/N's 3213029 and 3213042 and up	4H21
91-19 (Sheet 6)	PA-32R-301T: Early Models	4H22
91-19 (Sheet 7)	PA-32R-301T: Later Models, not including S/N's 3229003 and up	4H23
	LIGHTING SYSTEMS - EXTERNAL	
	Anti-Collision - Wing Strobes	
91-20A	PA-32R-301: S/N's 32R-8013001 and up, 3213001 thru 3213028, 3213030 thru 3213041	
	PA-32R-301T	4H24

ELECTRICAL SCHEMATIC INDEX (continued)

FIGURE NO.	SCHEMATIC	GRID NO.
	LIGHTING SYSTEMS - EXTERNAL (continued)	
	Anti-Collision - Strobes, Beacon (Option)	
91-20	PA-32R-301: S/N's 32R-8013001 and up, 3213001 thru 3213028, 3213030 thru 3213041	
	PA-32R-301T	4H24
	Anti-Collision - Strobes, Beacon and Position (Option)	
91-20B	PA-32R-301: S/N's 32R-8013001 and up, 3213001 thru 3213028, 3213030 thru 3213041	
	PA-32R-301T	4I1
91-20C	PA-32R-301: S/N's 32R-8013001 and up, 3213001 thru 3213028, 3213030 thru 3213041	
	PA-32R-301T	4I2
	Flood Lights	
91-33	PA-32R-301: S/N's 3213029 and 3213042 and up	4I22
	Landing Light	
91-21 (Sheet 1)	PA-32R-301: S/N's 32R-8013001 and up, 3213001 thru 3213028, 3213030 thru 3213041	
	PA-32R-301T	4I5
91-21 (Sheet 2)	PA-32R-301: S/N's 3213029 and 3213042 and up	4I6
	Navigation and Strobe Lights	
91-20D	PA-32R-301: S/N's 3213029 and 3213042 and up	4I3
	Recognition Lights	
91-20E	PA-32R-301: S/N's 3213029 and 3213042 and up	4I4
	Wing Inspection Light	
91-22	PA-32R-301/301T	4I7
	LIGHTING - INTERNAL	
	Baggage Light - Forward	
91-26	PA-32R-301/301T: (See Figure 91-15C for S/N's 3213029 and 3213042 and up)	4I13
	Cabin and Forward Baggage Compartment Lights (Option)	
91-25	PA-32R-301/301T: Later Models	4I12

ELECTRICAL SCHEMATIC INDEX (continued)

FIGURE NO.	SCHEMATIC	GRID NO.
	LIGHTING - INTERNAL (continued)	
	Courtesy Lights (Option)	
91-27 (Sheet 1)	PA-32R-301: S/N's 32R-8013001 and up, 3213001 thru 3213028, 3213030 thru 3213041	
	PA-32R-301T	4I14
91-27 (Sheet 2)	PA-32R-301: S/N's 3213029 and 3213042 and up	4I15
	Position, Panel and Radio Lighting	
91-24 (Sheet 1)	PA-32R-301: Early Models	4I9
91-24 (Sheet 2)	PA-32R-301T: Early Models	4I10
91-24 (Sheet 3)	PA-32R-301/301T: Later Models	4I11
	Post Lights - Instrument Panel	
91-34	PA-32R-301: S/N's 3213029 and 3213042 and up	4I23
	Reading Lights	
91-23	PA-32R-301/301T: Early Models	4I8
91-23A	PA-32R-301: Later Models, (See Figure 91-27, Sheet 2 for S/N's 3213029 and 3213042 and up)	
	PA-32R-301T: Later Models	4I8
	Switch Lights	
91-35	PA-32R-301: S/N's 3213029 and 3213042 and up	4I24
	VACUUM SYSTEM	
	Standby Vacuum System	
91-30	PA-32R-301/301T	4I20
	WARNING SYSTEMS	
	Baggage Door Ajar	
91-31	PA-32R-301: S/N's 3213029 and 3213042 and up	4I21
	Stall Warning	
91-28 (Sheet 1)	PA-32R-301: S/N's 32R-8013001 and up, 3213001 thru 3213028, 3213030 thru 3213041	
	PA-32R-301T	4I16
91-28 (Sheet 2)	PA-32R-301: S/N's 3213029 and 3213042 and up	4I17
	Vacuum Inop	
91-32	PA-32R-301: S/N's 3213029 and 3213042 and up	4I21

THIS PAGE INTENTIONALLY LEFT BLANK

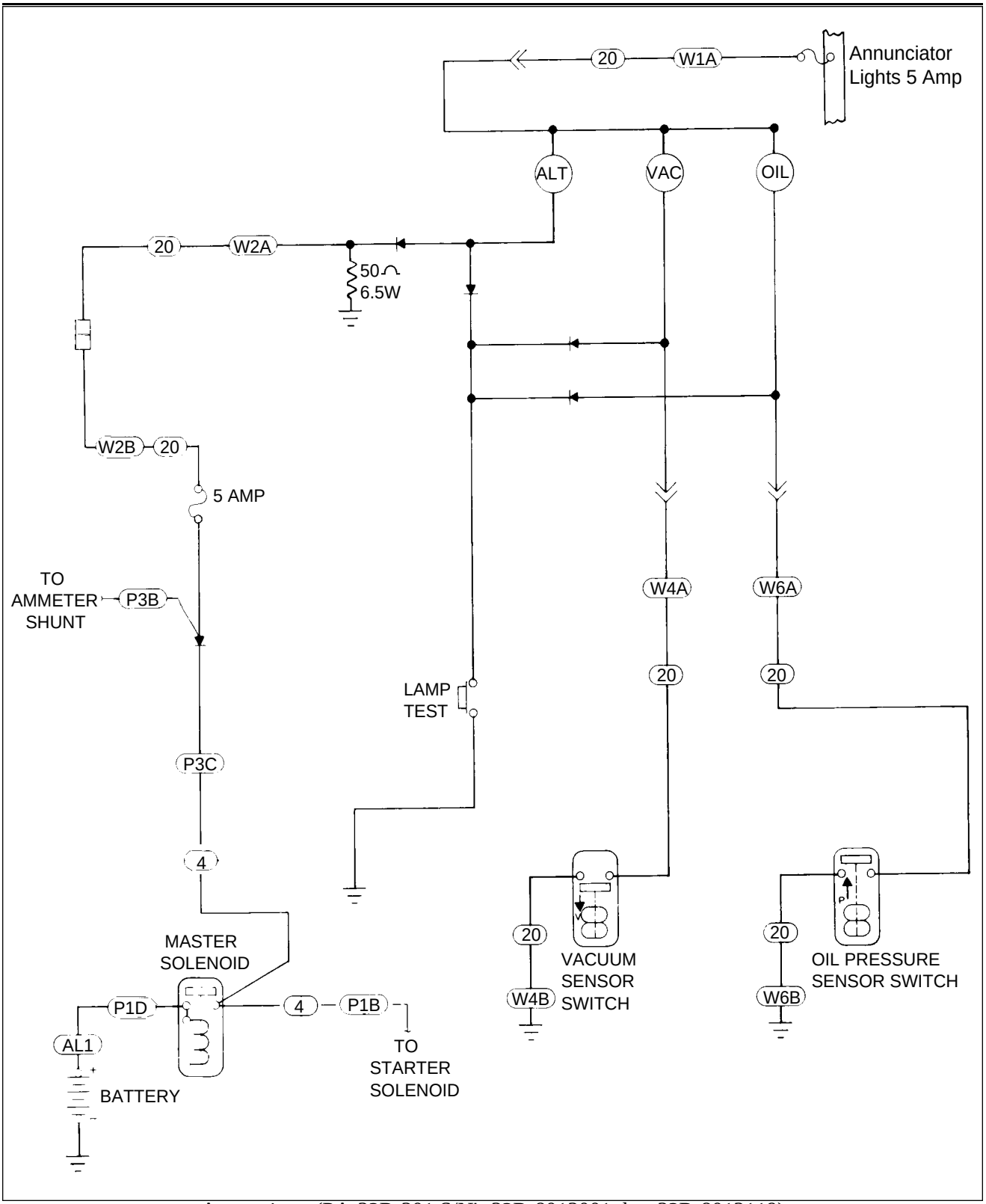

Annunciator (PA-32R-301 S/N's 32R-8013001 thru 32R-8013119)
Figure 91-1 (Sheet 1 of 8)

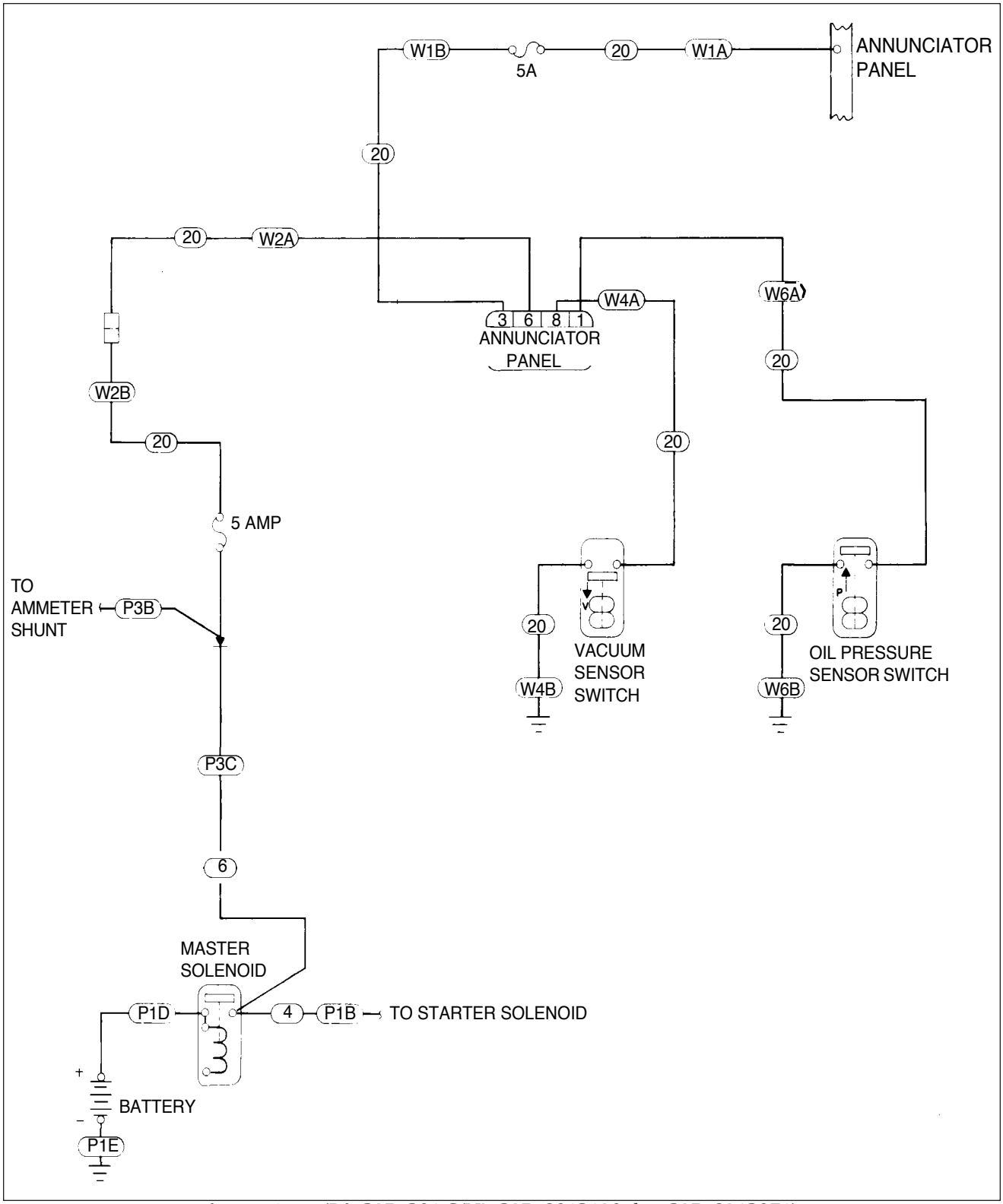

Annunciator (PA-32R-301 S/N's 32R-8013120 thru 32R-8213071)
Figure 91-1 (Sheet 2 of 8)

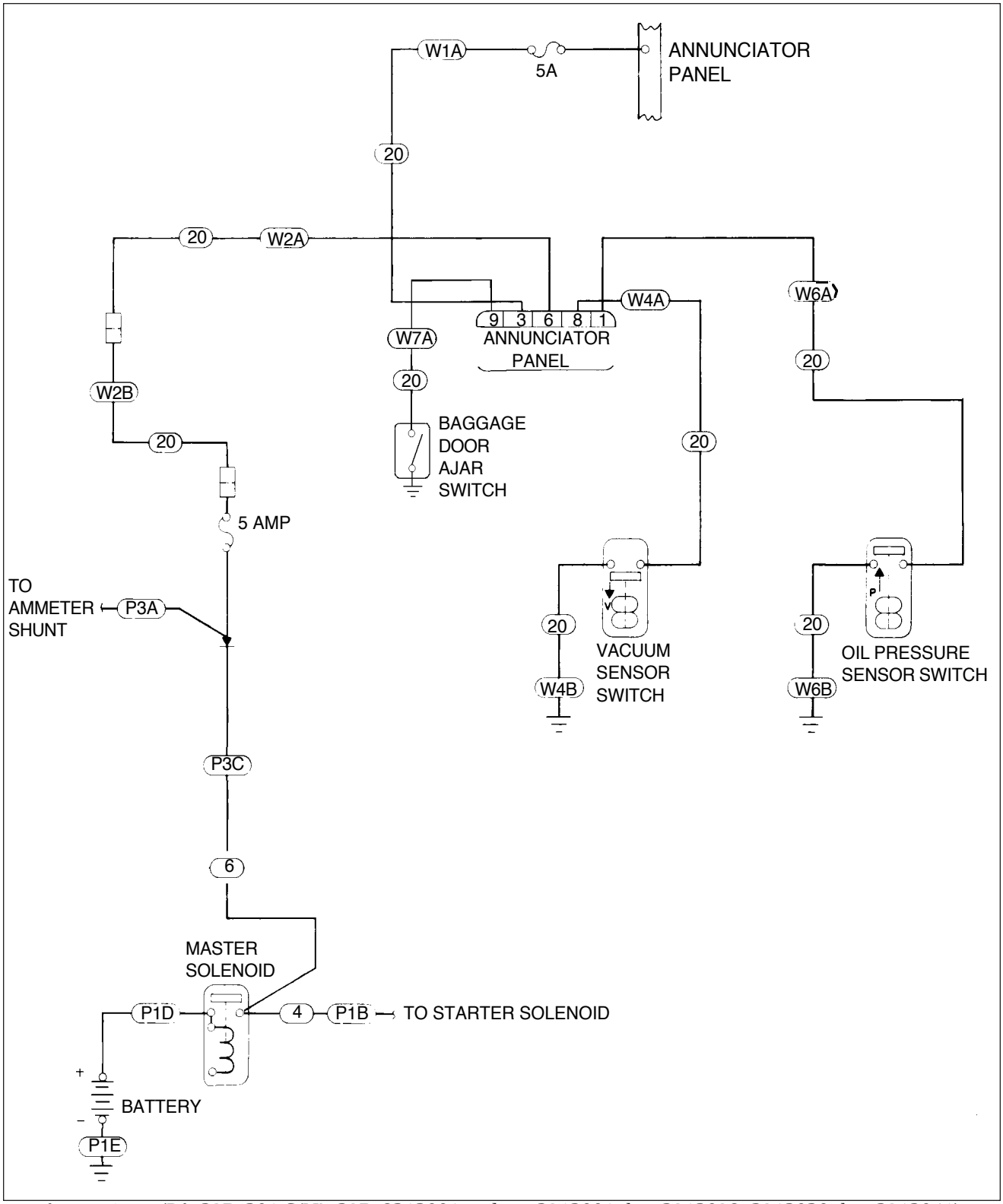

Annunciator (PA-32R-301 S/N's 32R-8313001 and up, 3213001 thru 3213028, 3213030 thru 3213041)
Figure 91-1 (Sheet 3 of 8)

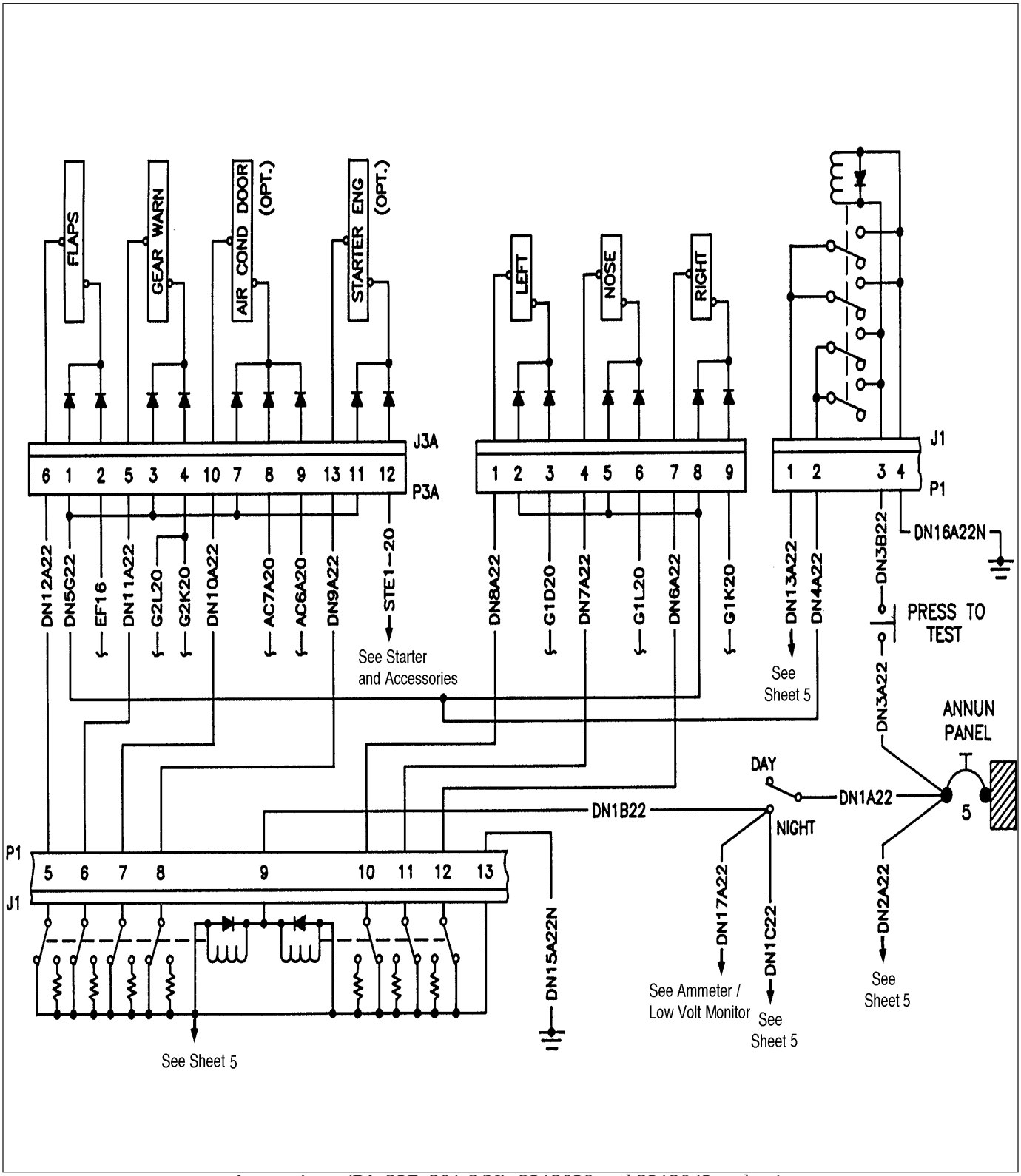

Annunciator (PA-32R-301 S/N's 3213029 and 3213042 and up)
Figure 91-1 (Sheet 4 of 8)

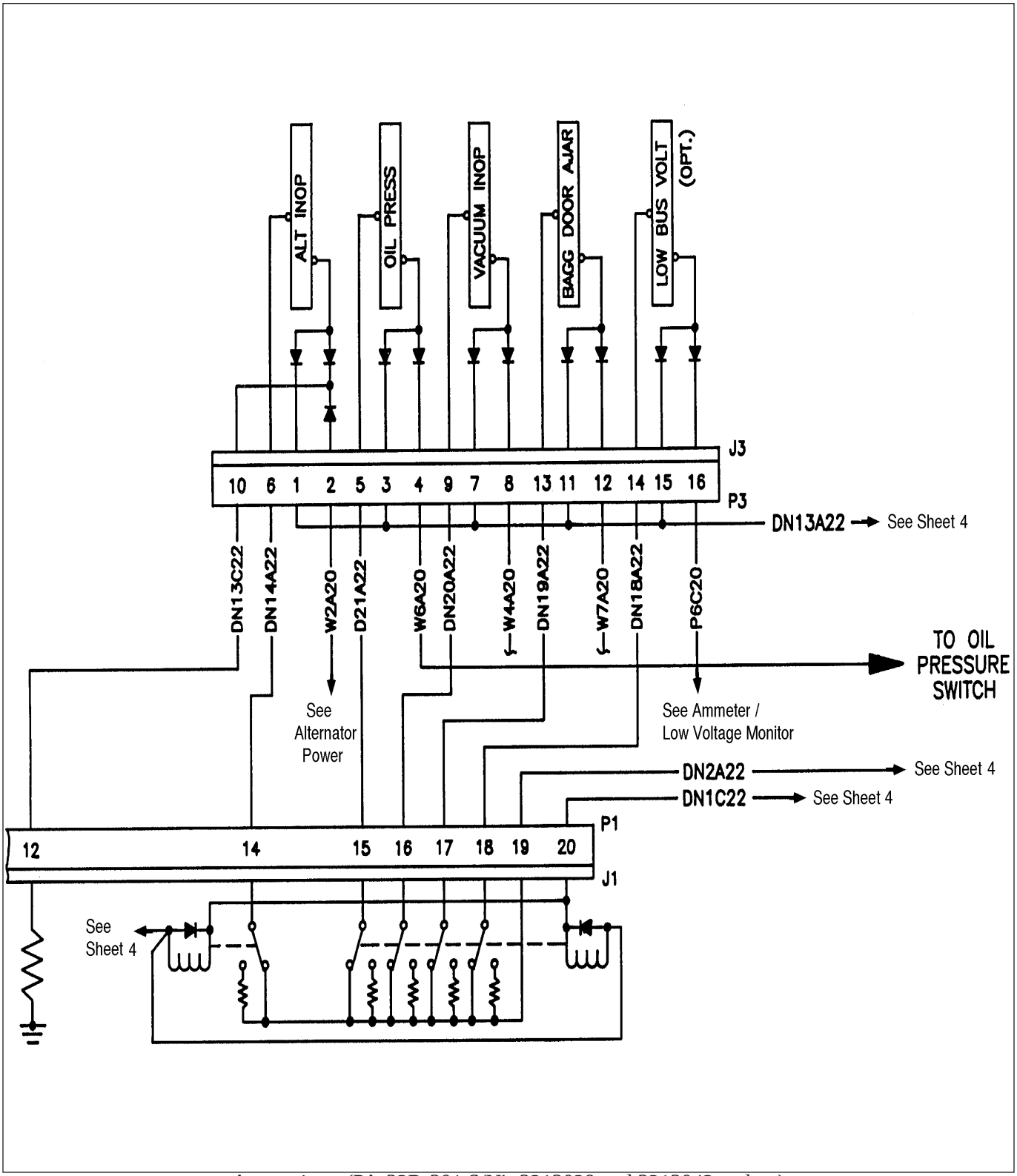

Annunciator (PA-32R-301 S/N's 3213029 and 3213042 and up)
Figure 91-1 (Sheet 5 of 8)

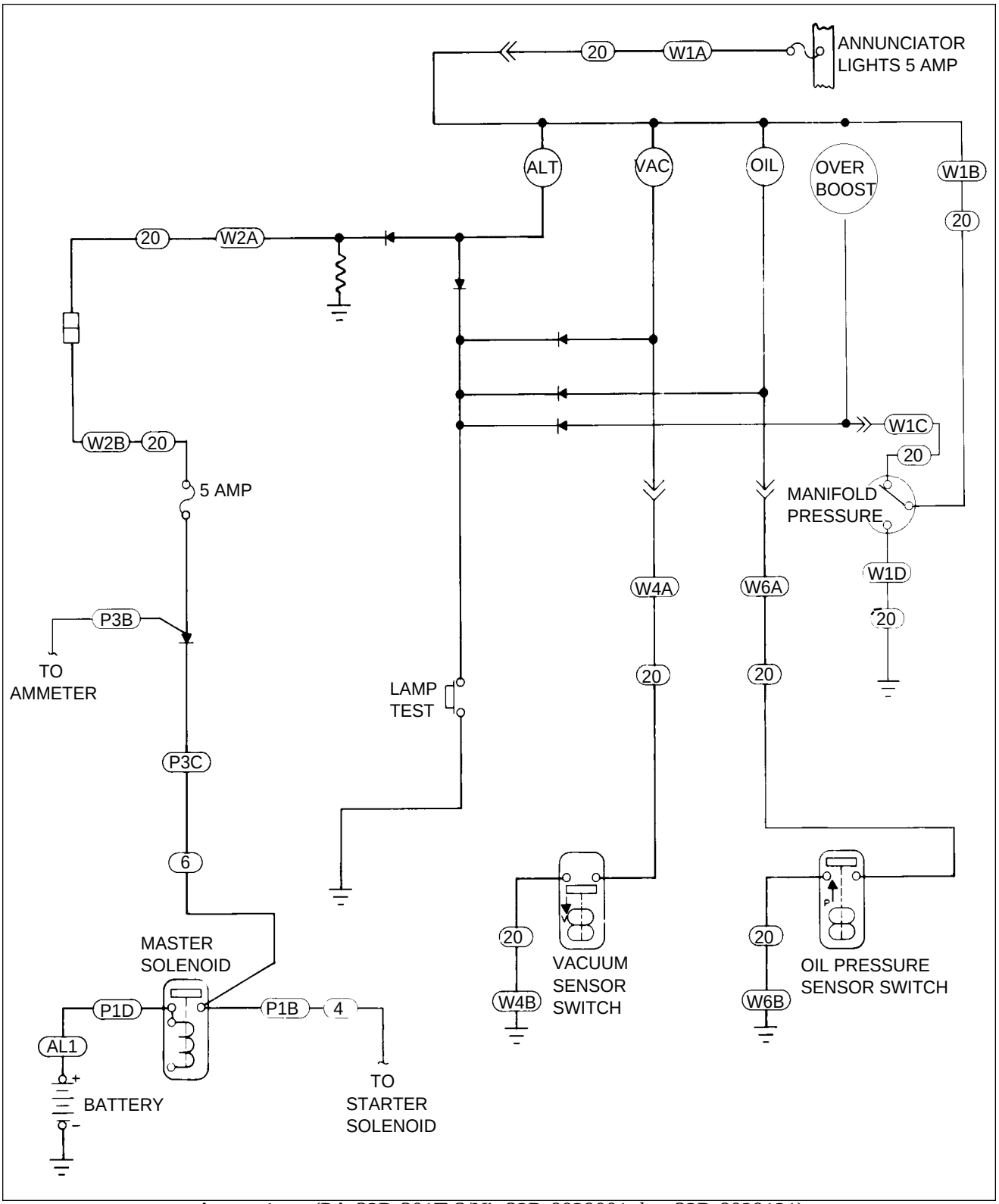

Annunciator (PA-32R-301T S/N's 32R-8029001 thru 32R-8029121)
Figure 91-1 (Sheet 6 of 8)

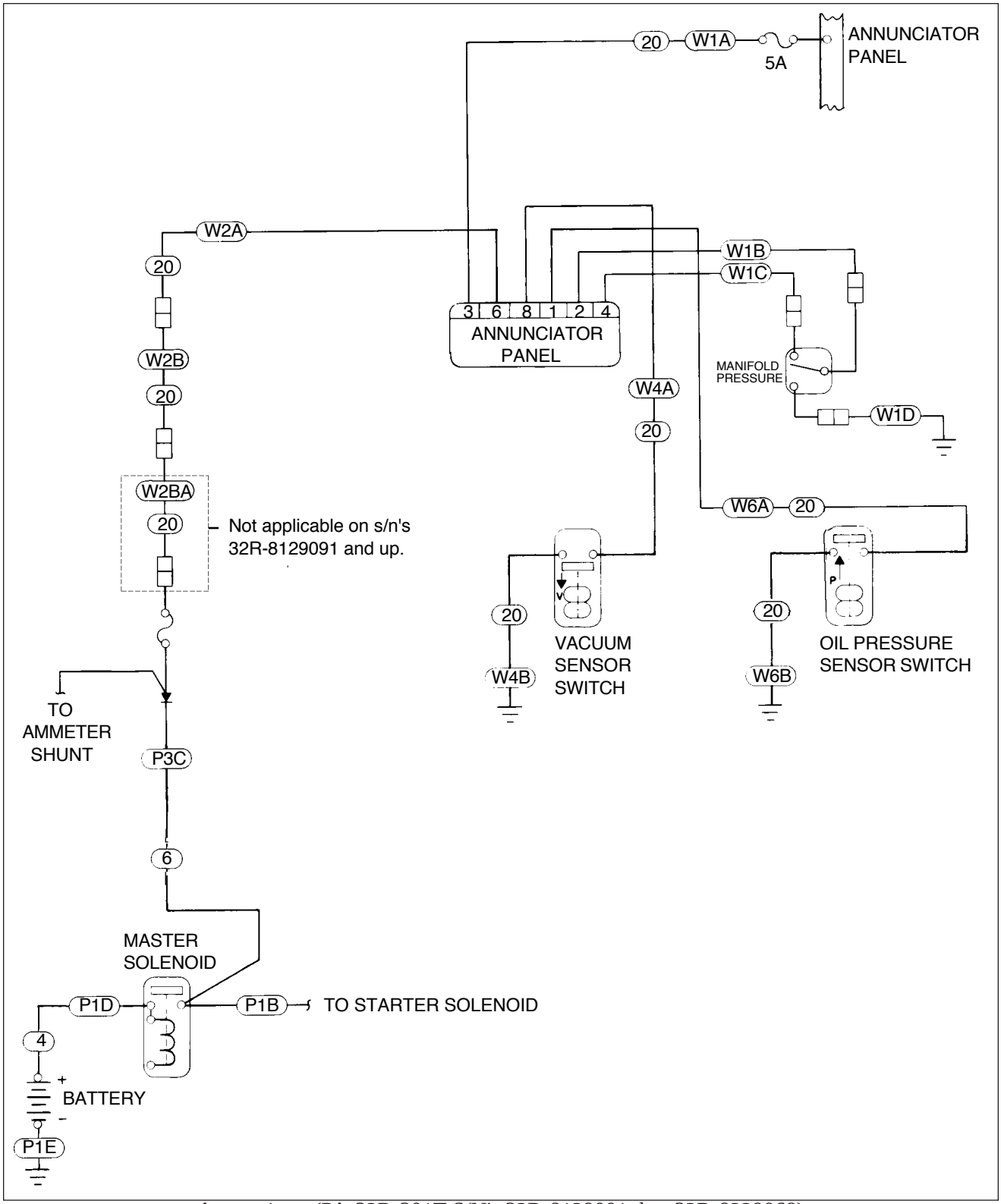

Annunciator (PA-32R-301T S/N's 32R-8129001 thru 32R-8229068)
Figure 91-1 (Sheet 7 of 8)

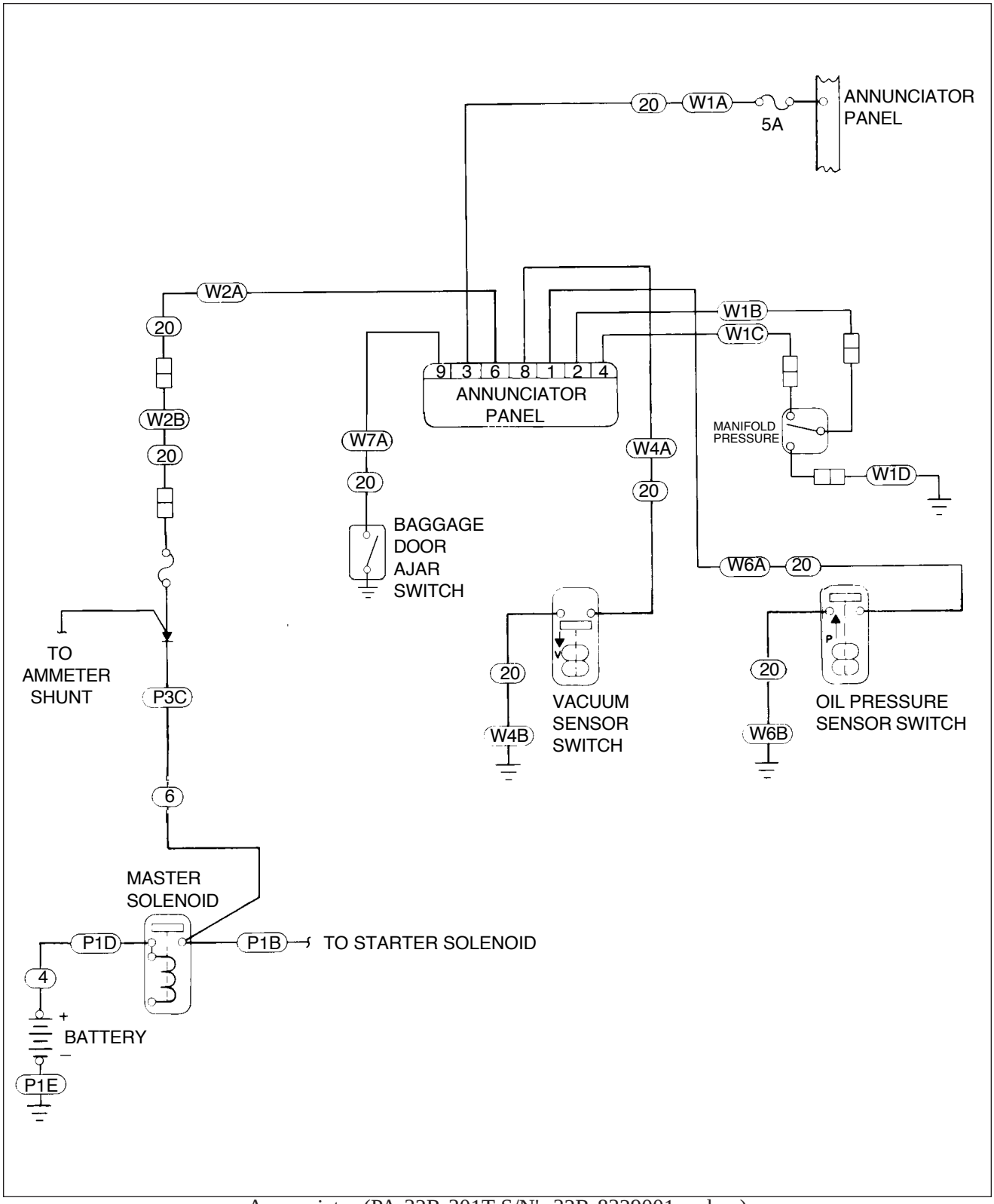

Annunciator (PA-32R-301T S/N's 32R-8329001 and up)
Figure 91-1 (Sheet 8 of 8)

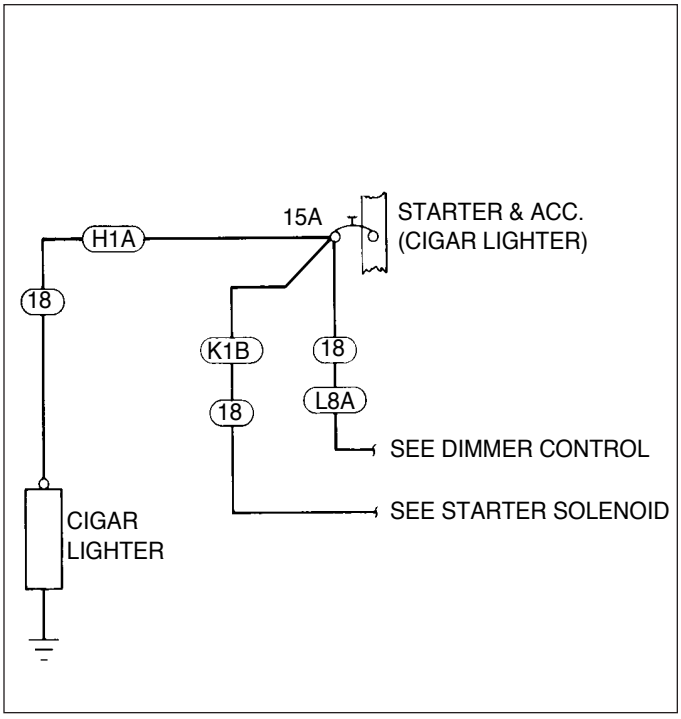

Cigar Lighter (PA-32R-301/301T)
Figure 91-2

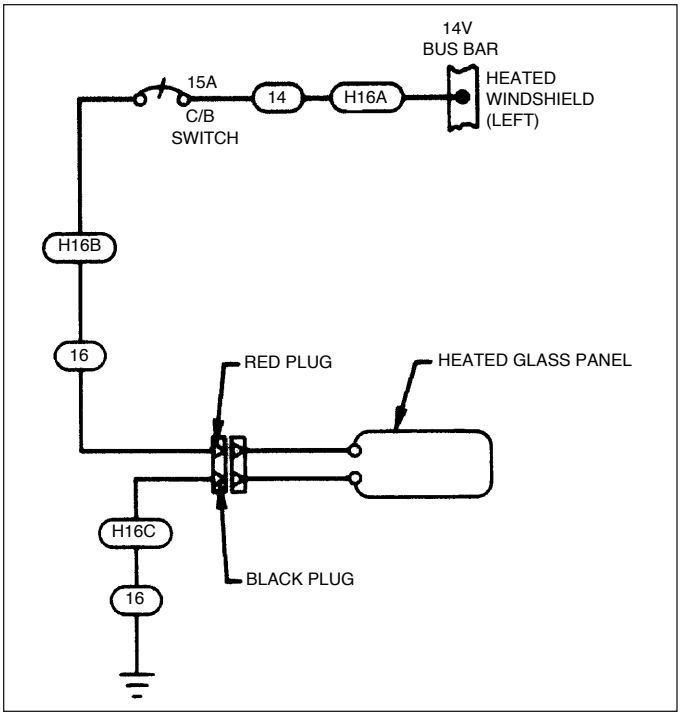

Windshield (Heated Panel) (PA-32R-301T)
Figure 91-3

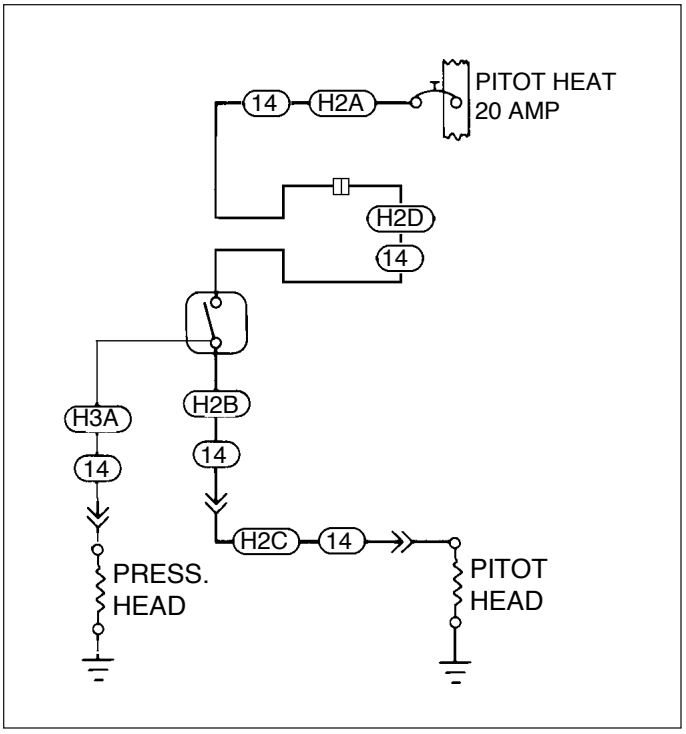

Pitot Heat (PA-32R-301 S/N's 32R-8013001 thru 32R-8013119)
(PA-32R-301T S/N's 32R-8029001 thru 32R-8029107)
Figure 91-4

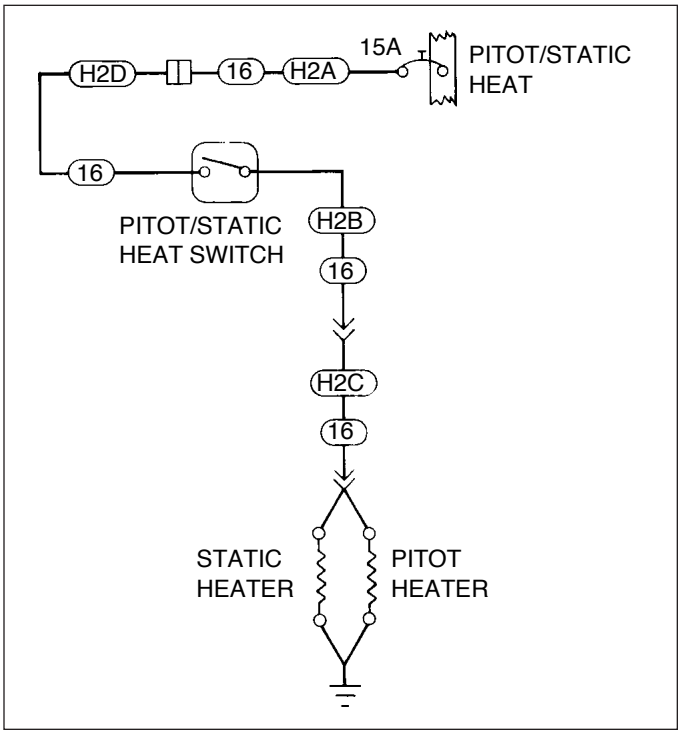

Pitot Heat (PA-32R-301 S/N's 32R-8013120 and up, 3213001 thru 3213028, 3213030 thru 3213041 and PA-32R-301T S/N's 32R-8029108 and up)
Figure 91-4A

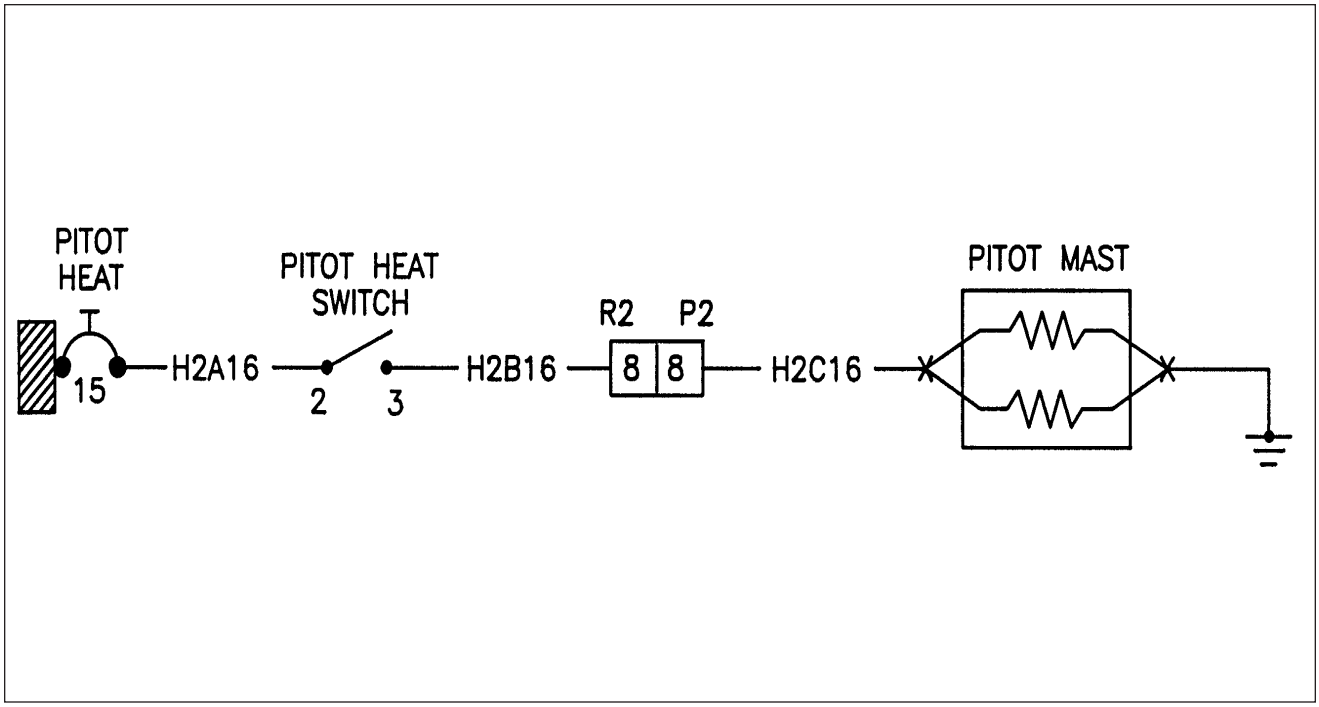

Pitot Heat (PA-32R-301 S/N's 3213029 and 3213042 and up)
Figure 91-4B

THIS SPACE INTENTIONALLY LEFT BLANK

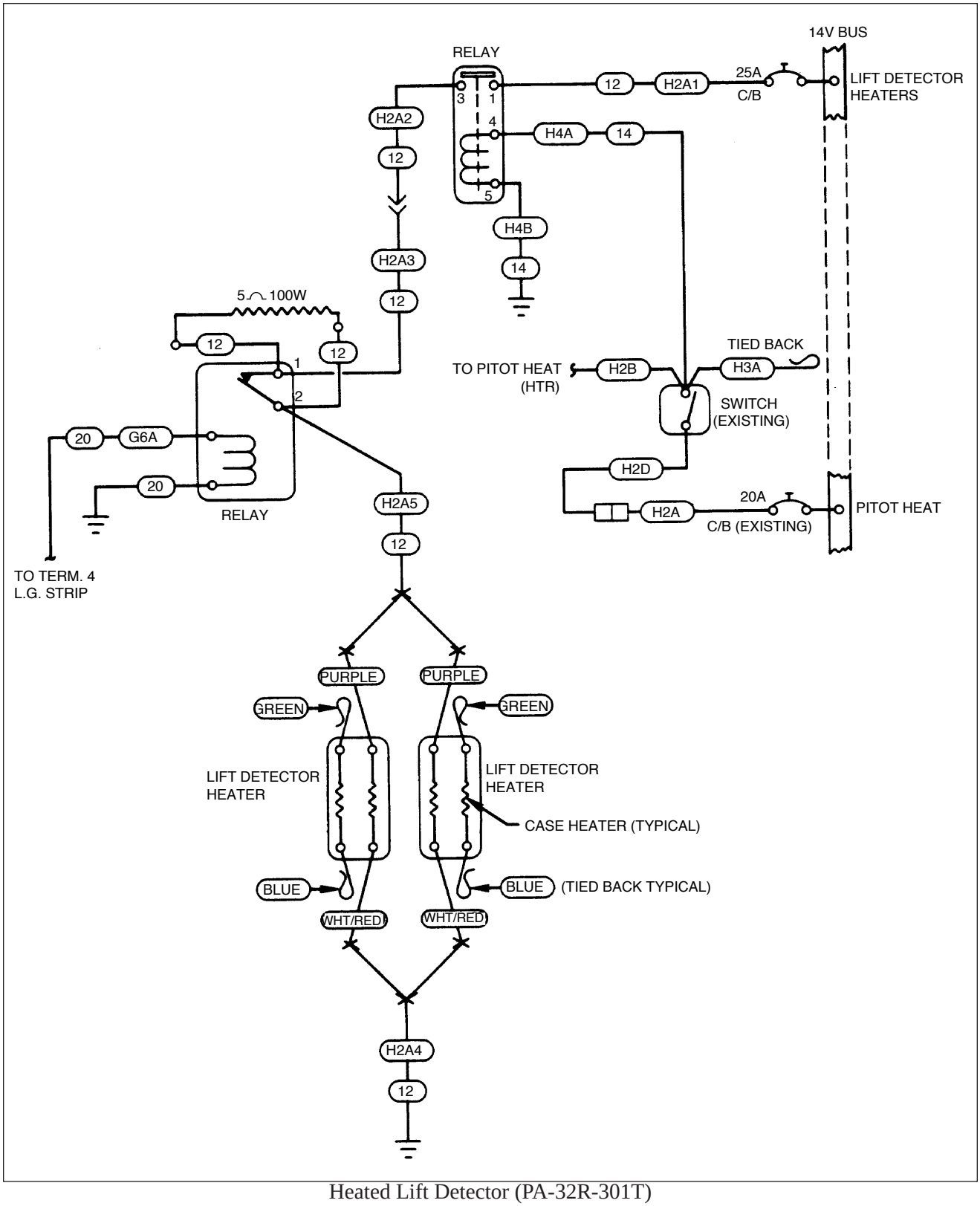

Heated Lift Detector (PA-32R-301T)
Figure 91-5

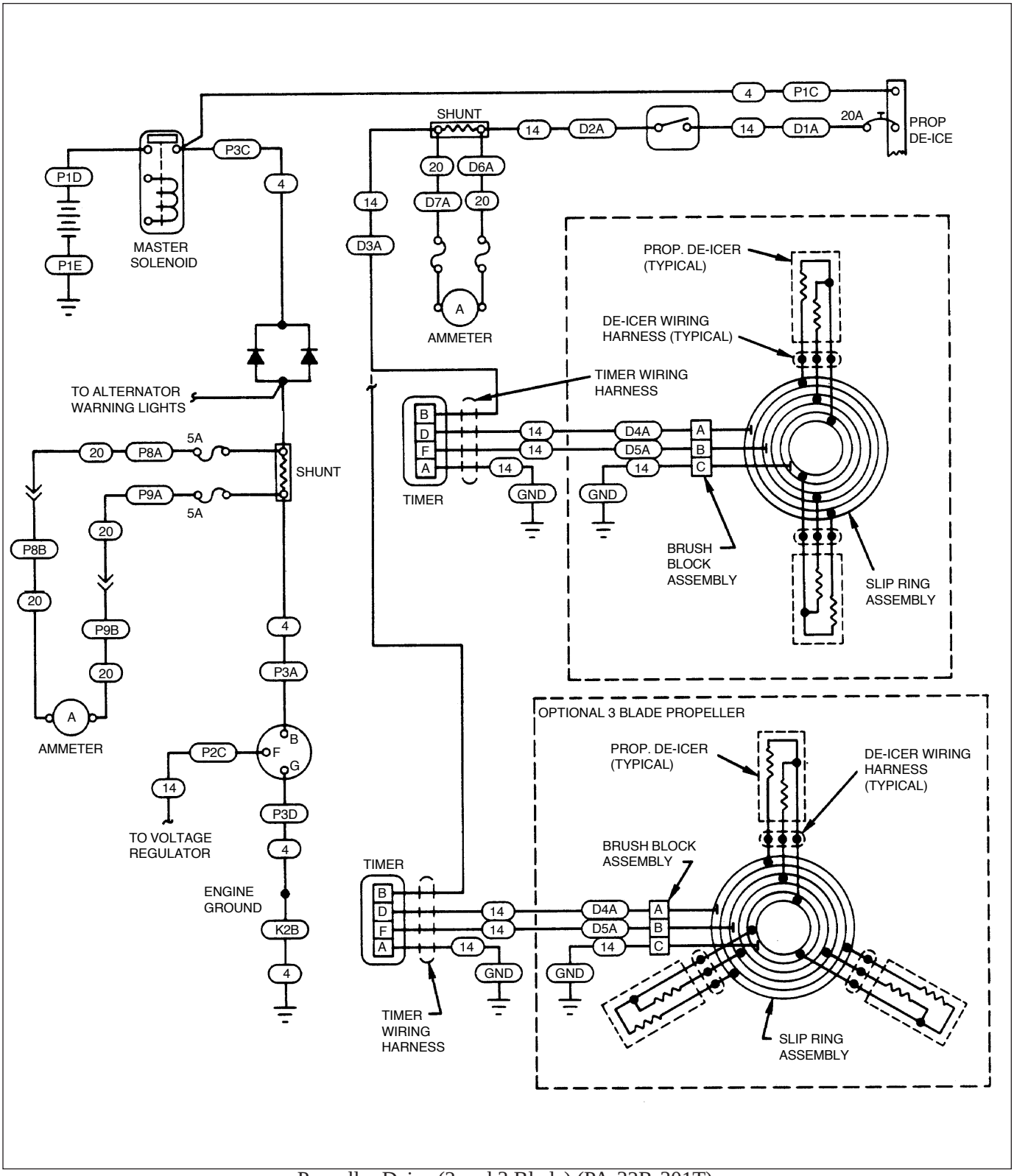

Propeller Deice (2 and 3 Blade) (PA-32R-301T)
Figure 91-6

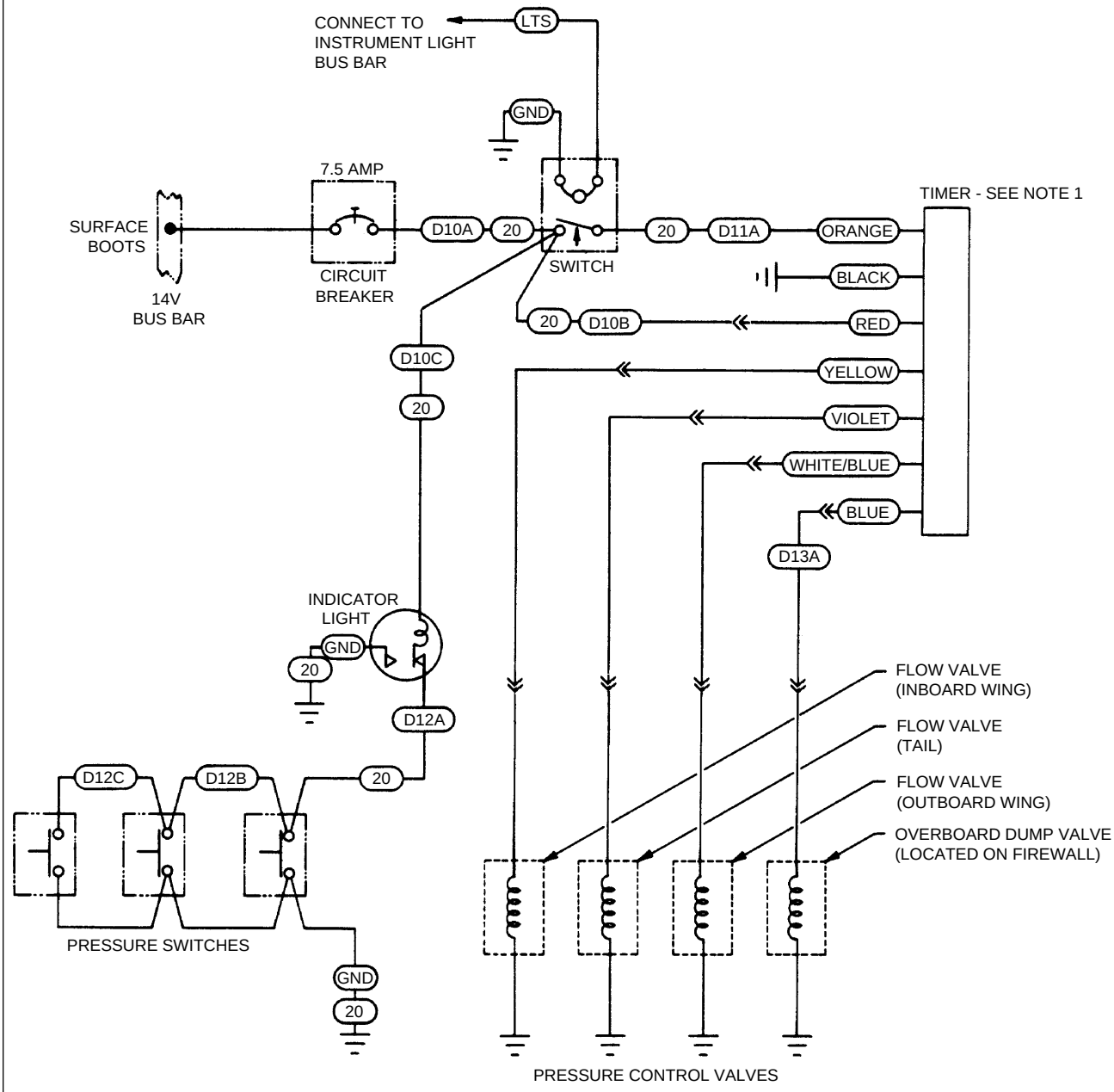

NOTES:

1. Timer cycle: 18 Second Cycle sequenced as follows:
   a. 6 Seconds: Inboard Wing (Yellow Wire)
   b. 6 Seconds: Outboard Wing (White/Blue Wire)
   c. 6 Seconds: Tail (Violet Wire)

The overboard dump valve is energized during the complete 18 second cycle, restricting the normal overboard path of air from the positive side of the engine vacuum pump. The air is diverted to the de-icer boots by the pressure control valves per the sequence noted above.

Surface Deicer (PA-32R-301T)
Figure 91-7

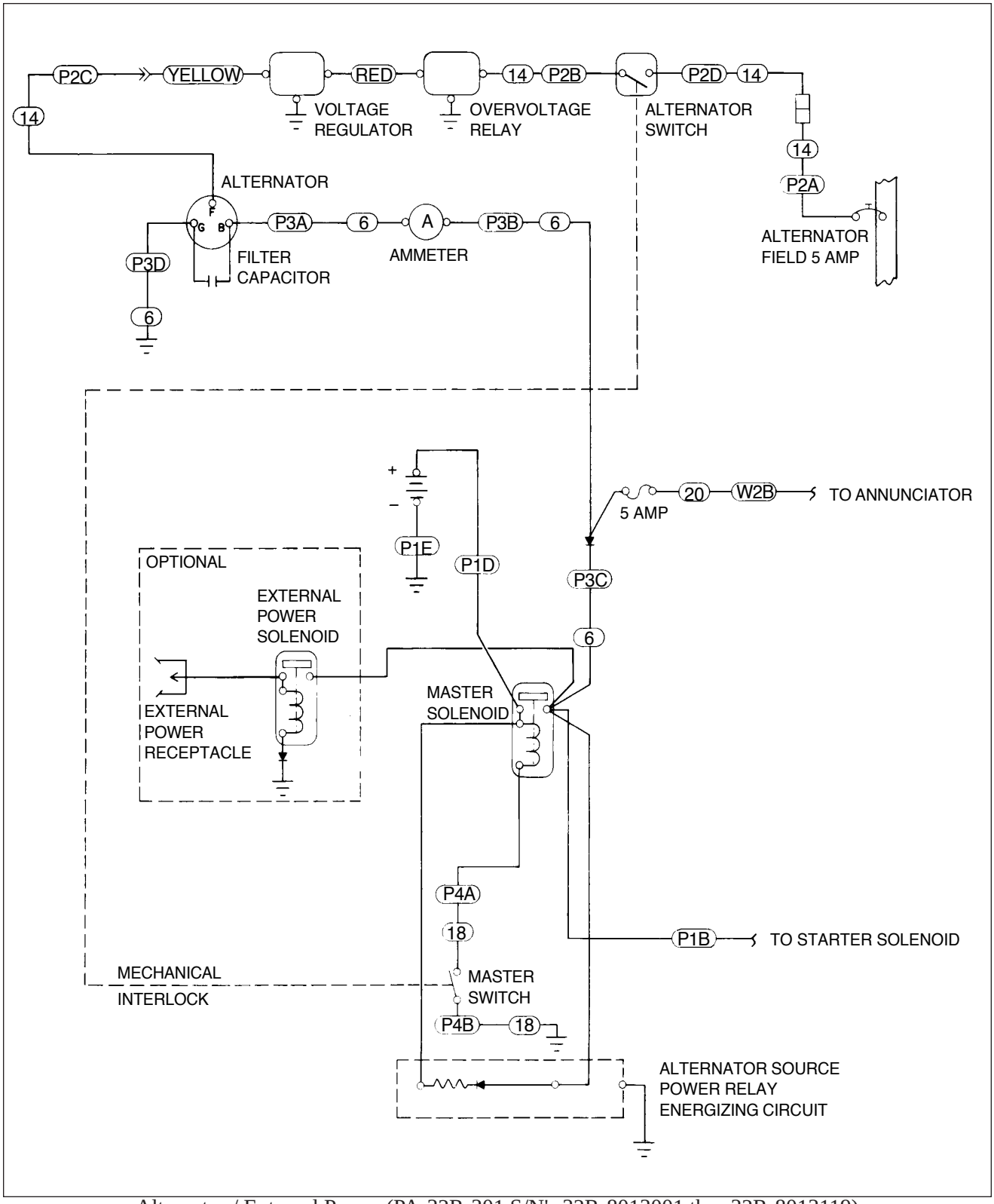

Alternator / External Power (PA-32R-301 S/N's 32R-8013001 thru 32R-8013119)
Figure 91-8 (Sheet 1 of 9)

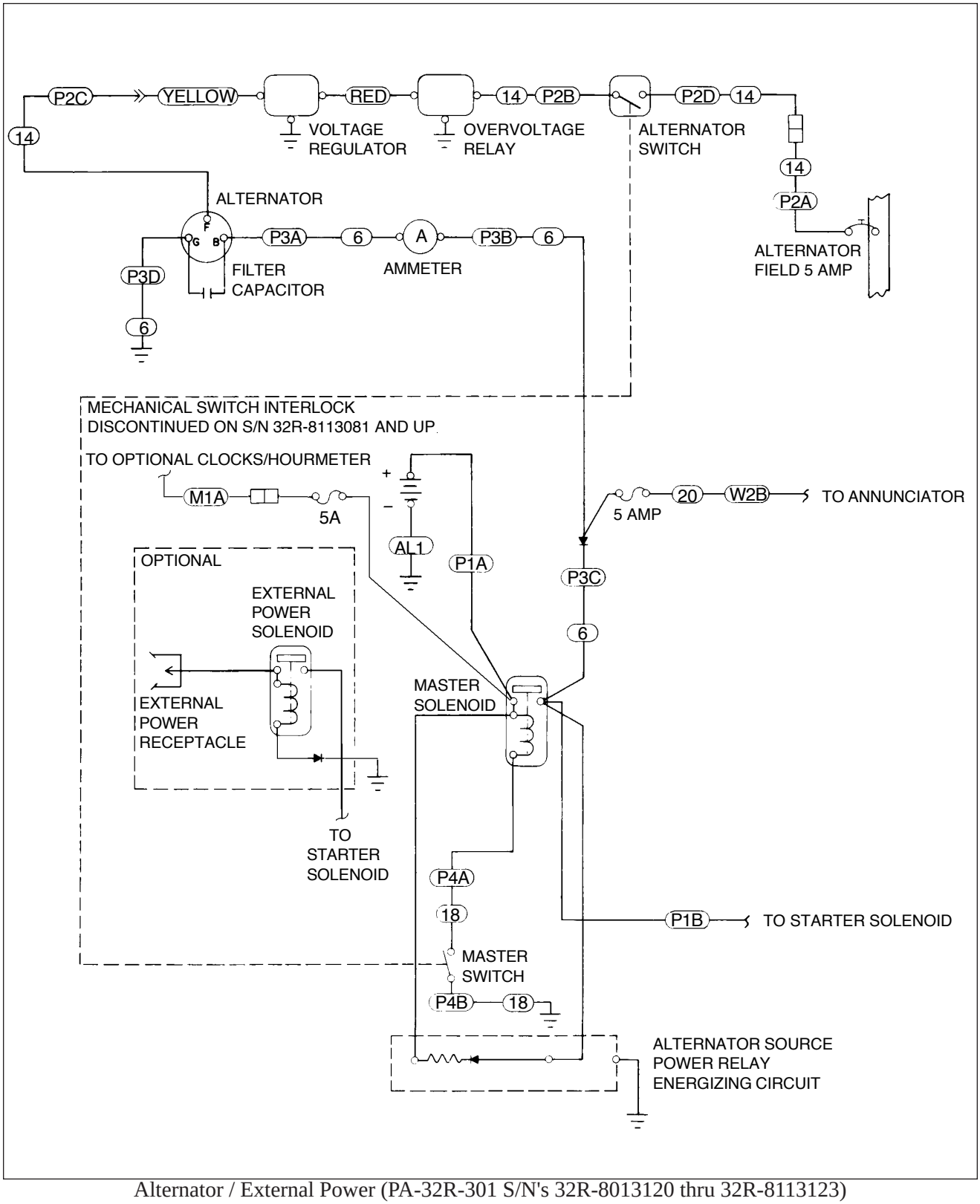

Alternator / External Power (PA-32R-301 S/N's 32R-8013120 thru 32R-8113123)
Figure 91-8 (Sheet 2 of 9)

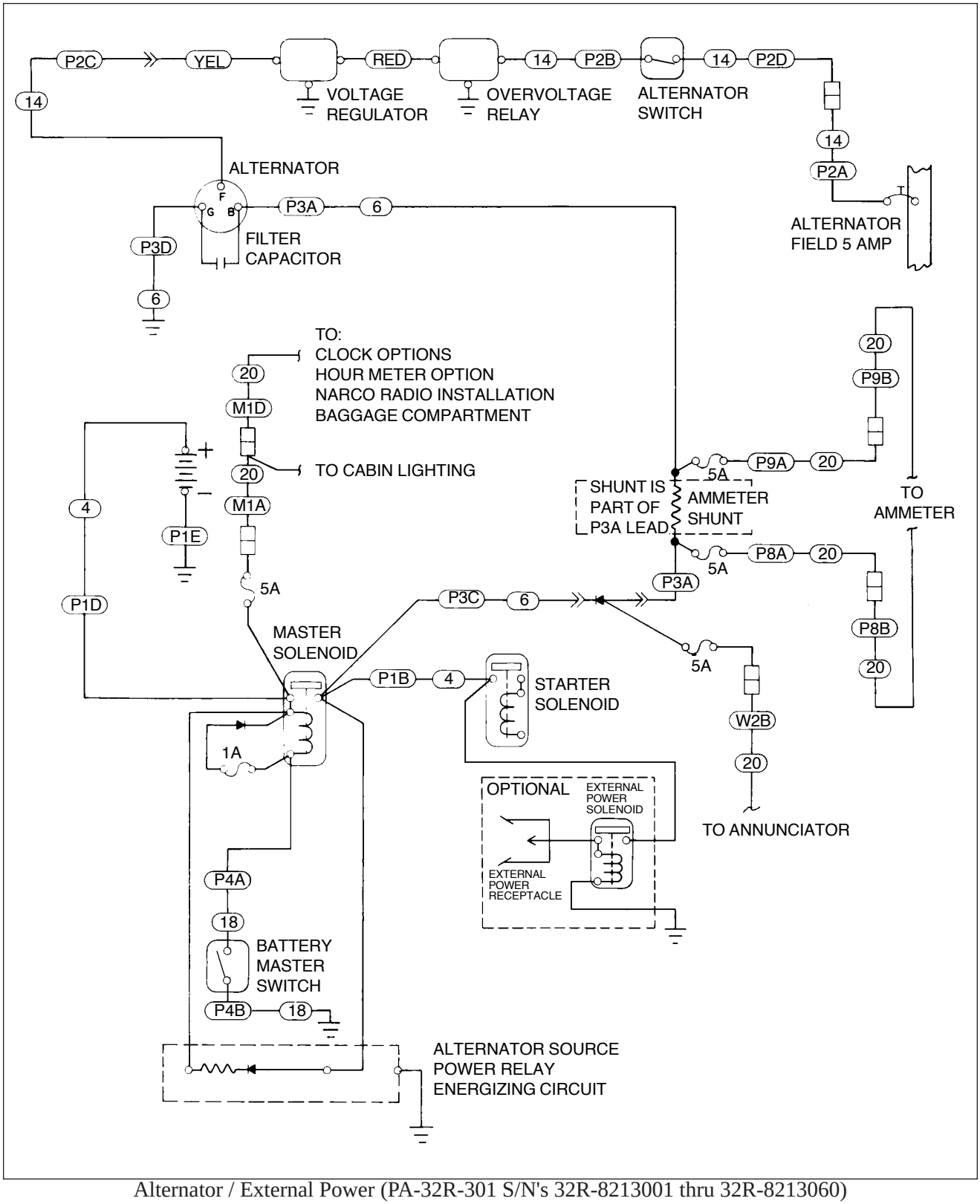

Alternator / External Power (PA-32R-301 S/N's 32R-8213001 thru 32R-8213060)
Figure 91-8 (Sheet 3 of 9)

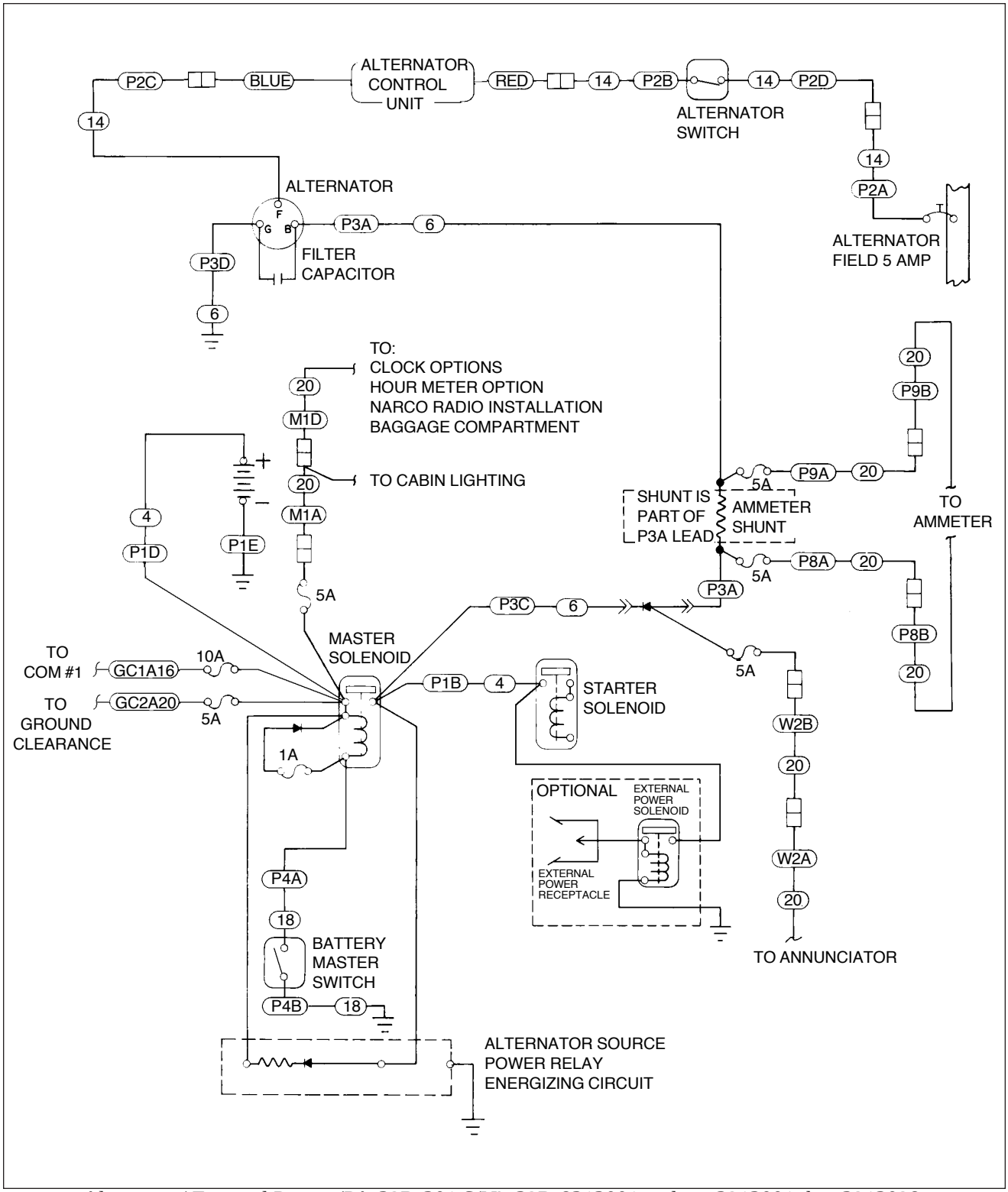

Alternator / External Power (PA-32R-301 S/N's 32R-8313001 and up, 3213001 thru 3213028, 3213030 thru 3213041)

Figure 91-8 (Sheet 4 of 9)

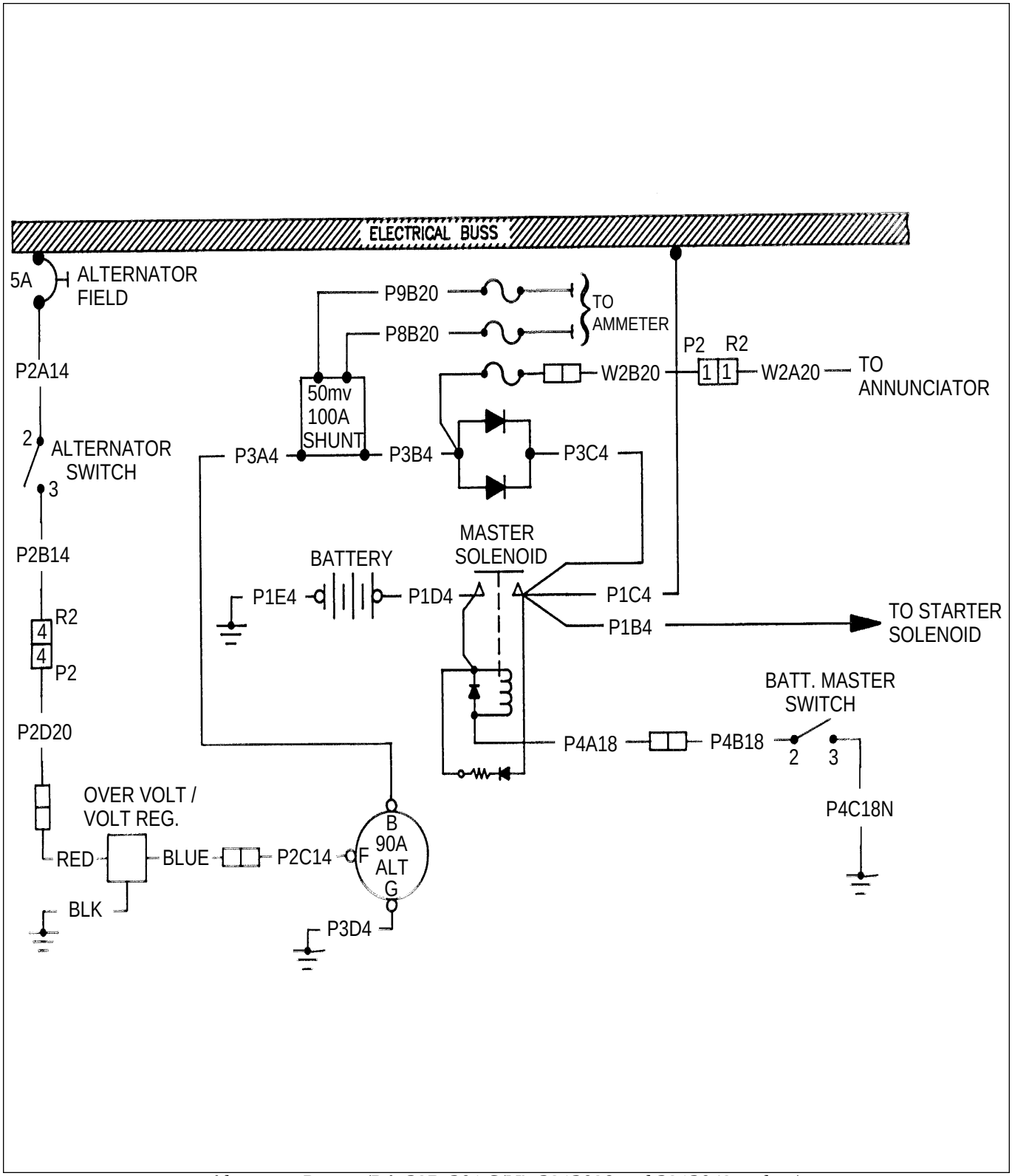

Alternator Power (PA-32R-301 S/N's 3213029 and 3213042 and up)
Figure 91-8 (Sheet 5 of 9)

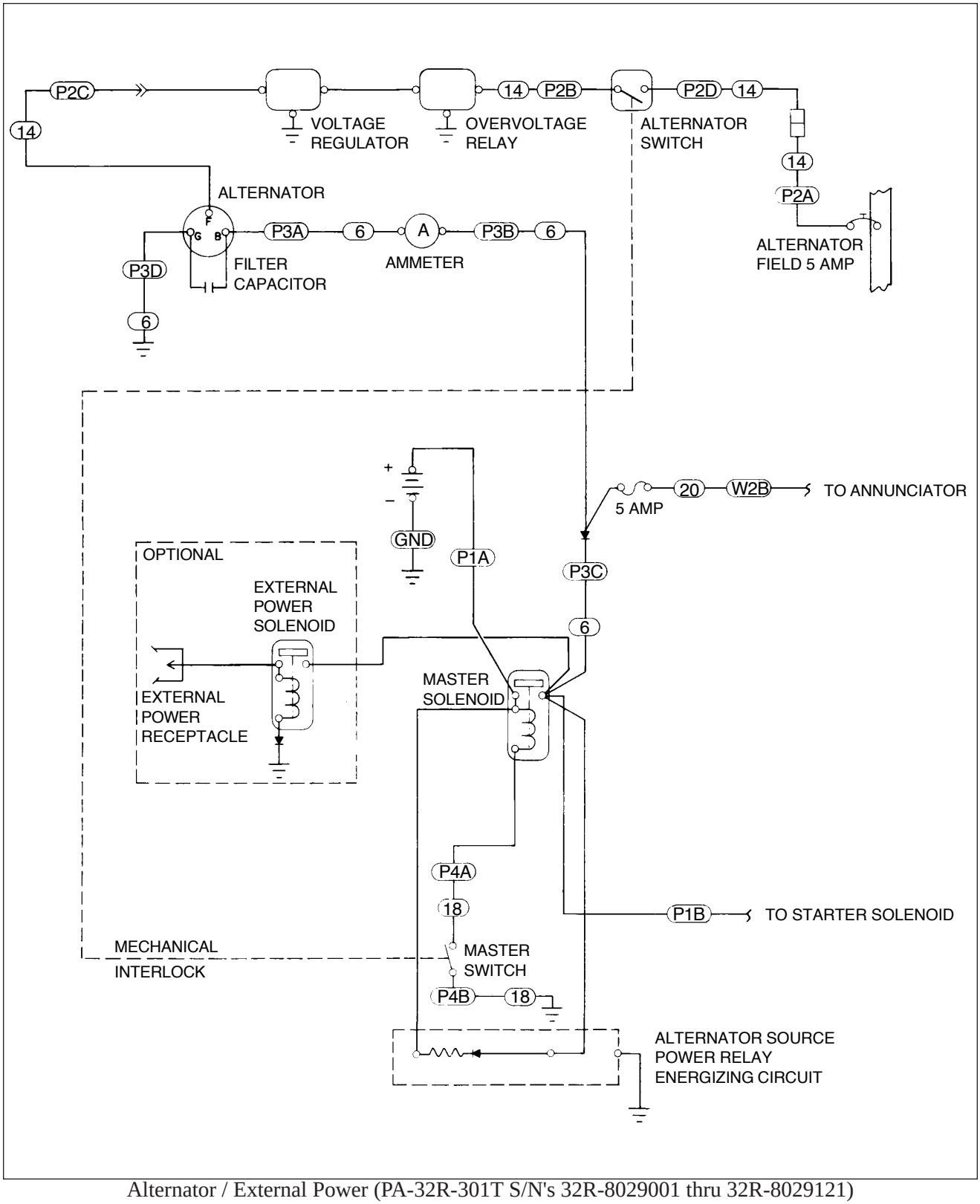

Alternator / External Power (PA-32R-301T S/N's 32R-8029001 thru 32R-8029121)
Figure 91-8 (Sheet 6 of 9)

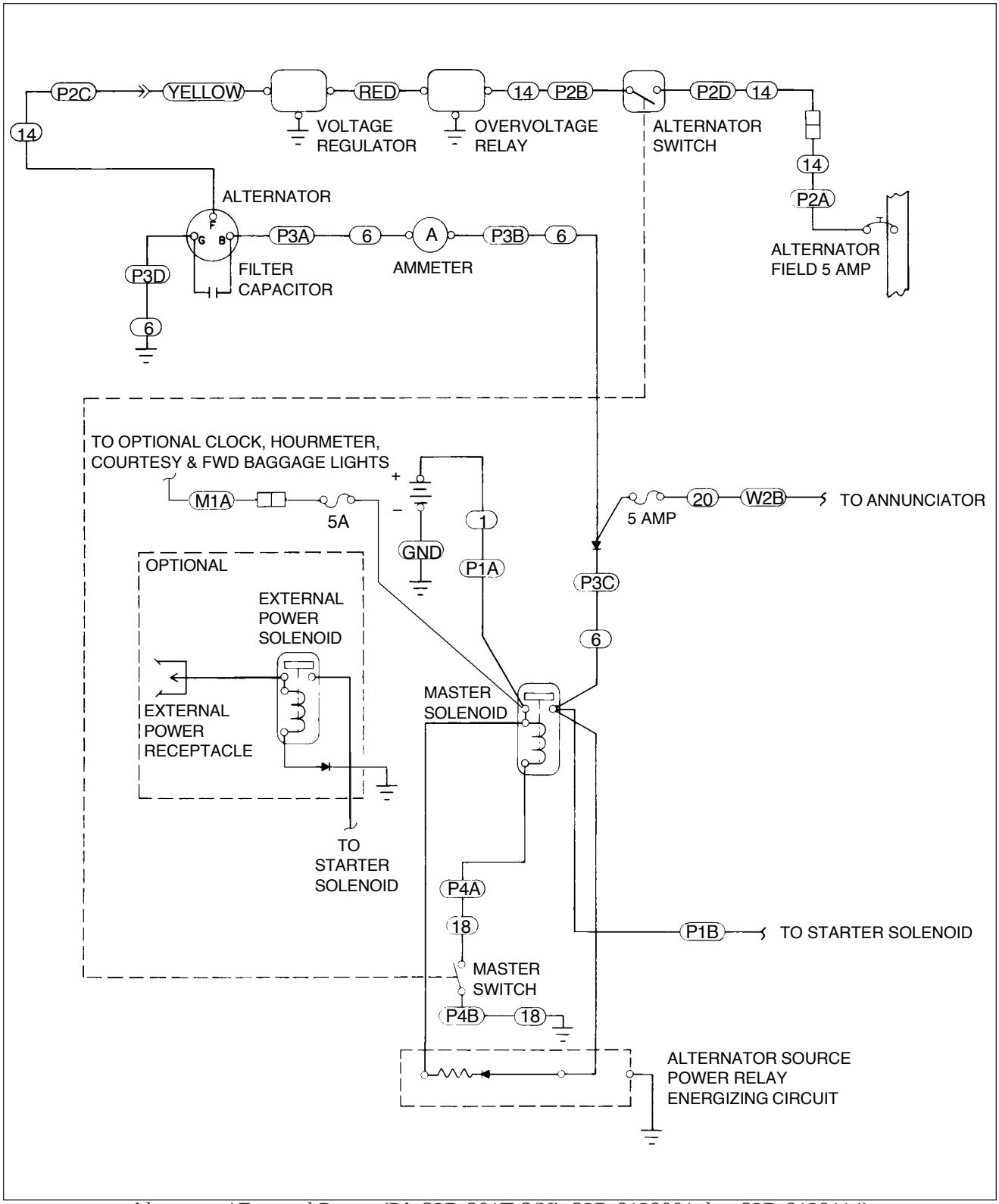

Alternator / External Power (PA-32R-301T S/N's 32R-8129001 thru 32R-8129114)
Figure 91-8 (Sheet 7 of 9)

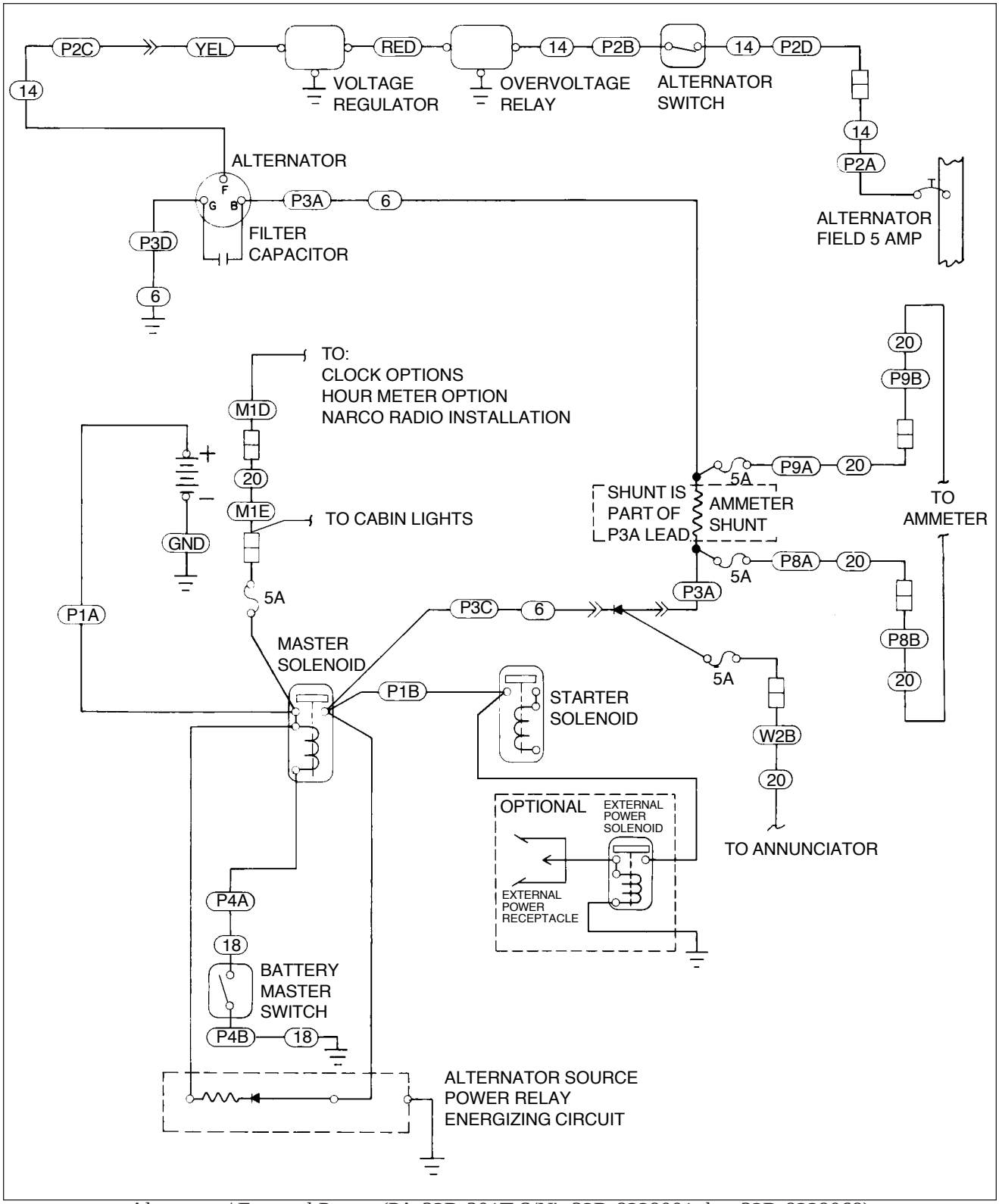

Alternator / External Power (PA-32R-301T S/N's 32R-8229001 thru 32R-8229068)
Figure 91-8 (Sheet 8 of 9)

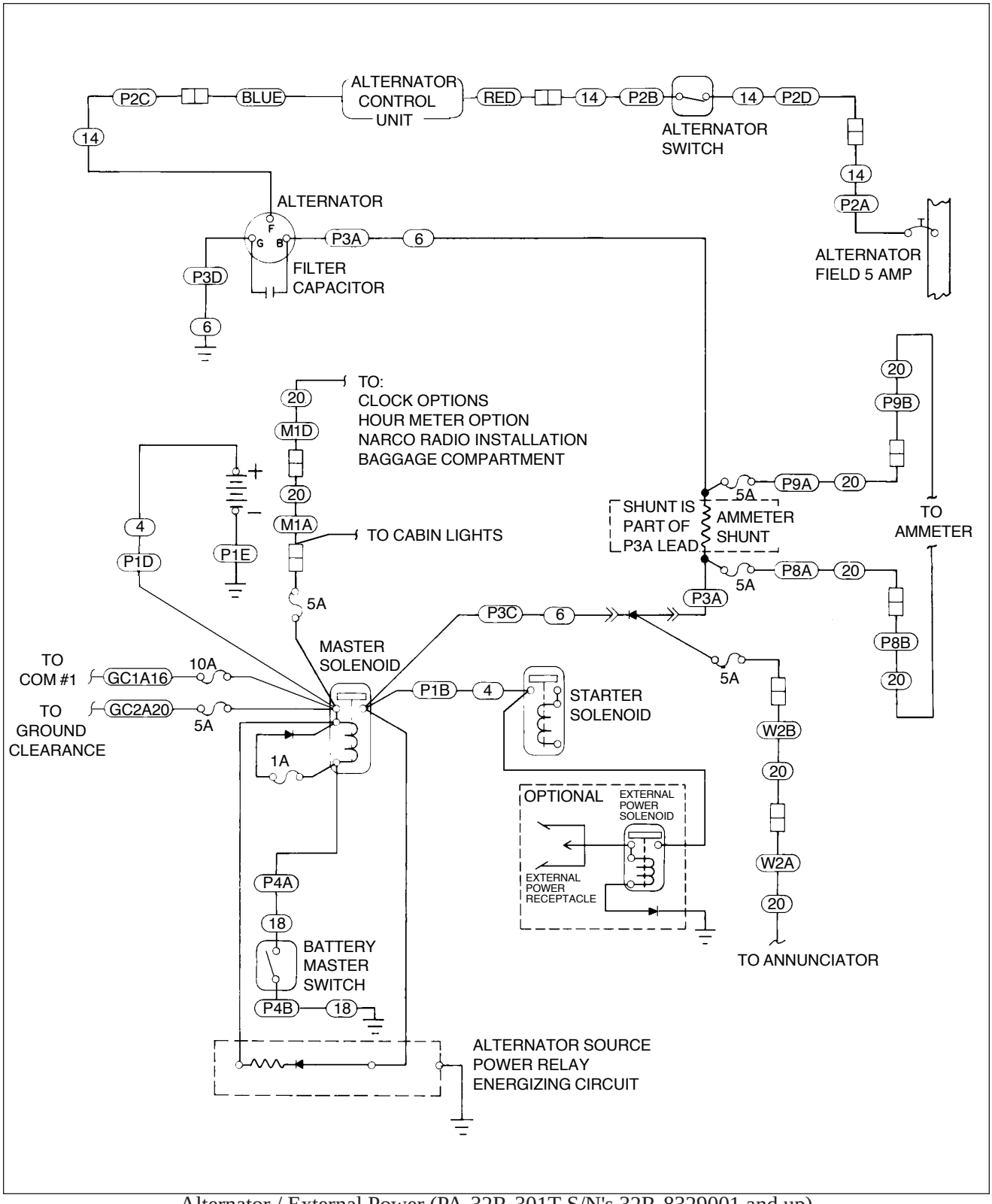

Alternator / External Power (PA-32R-301T S/N's 32R-8329001 and up)
Figure 91-8 (Sheet 9 of 9)

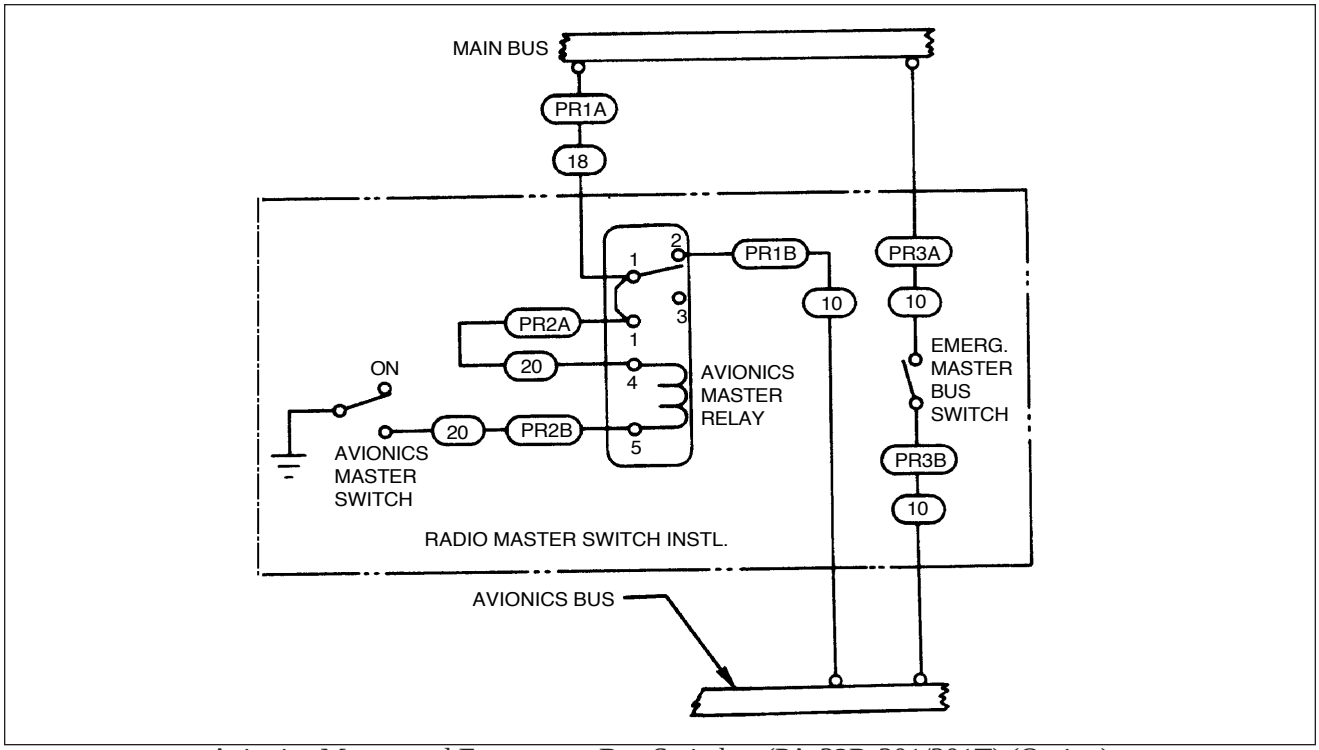

Avionics Master and Emergency Bus Switches (PA-32R-301/301T) (Option)
Figure 91-9

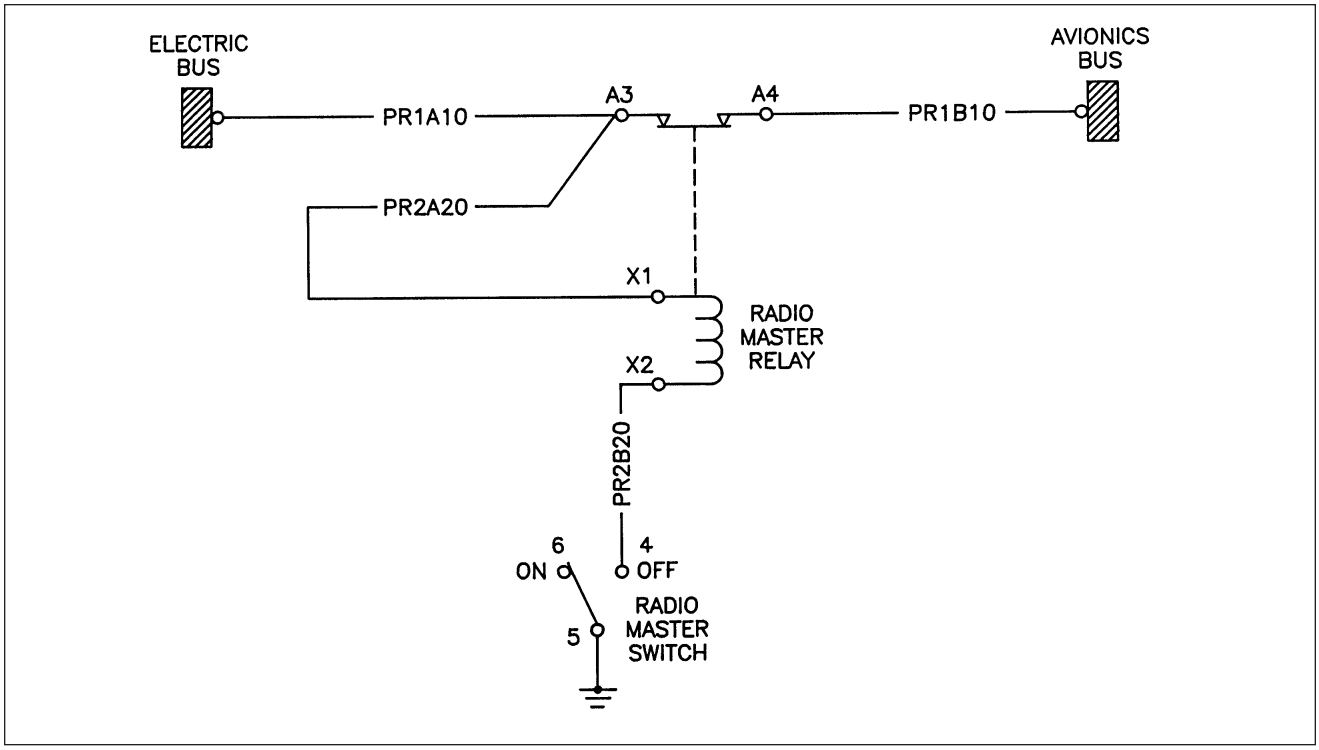

Avionics Master Switch (PA-32R-301 S/N's 3213029 and 3213042 and up)
Figure 91-9A

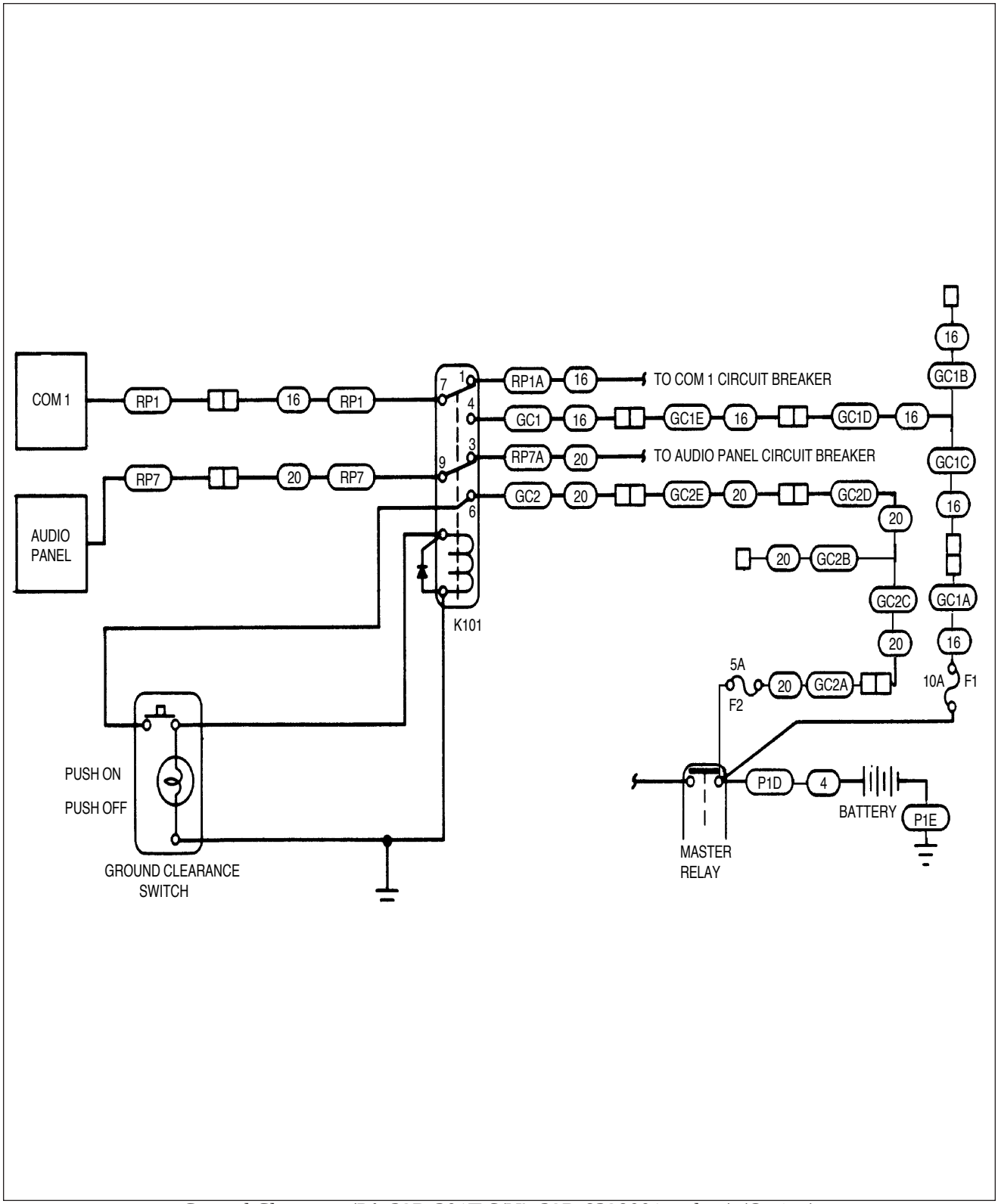

Ground Clearance (PA-32R-301T S/N's 32R-8329001 and up) (Option)
Figure 91-10 (Sheet 1 of 2)

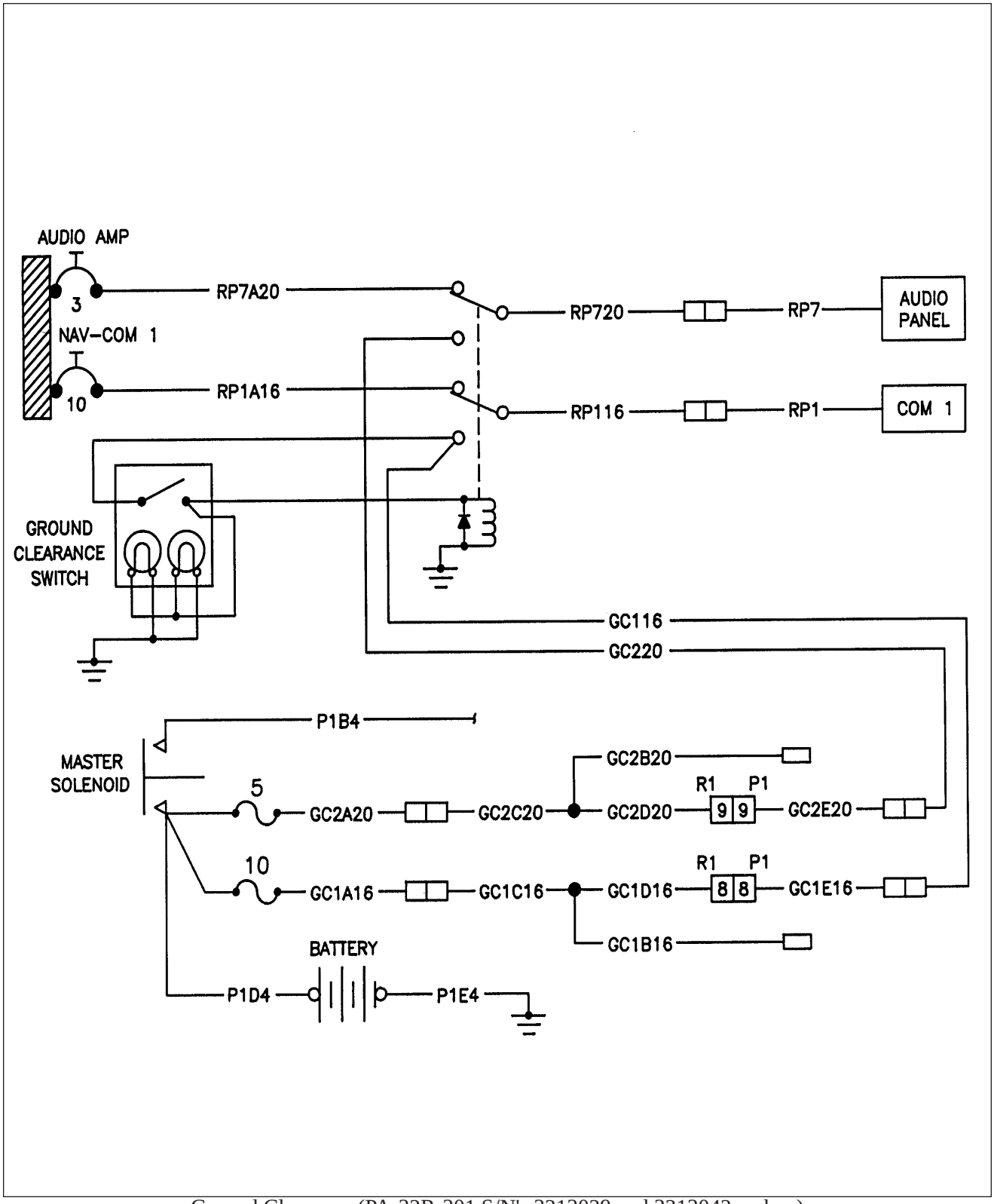

Ground Clearance (PA-32R-301 S/N's 3213029 and 3213042 and up)
Figure 91-10 (Sheet 2 of 2)

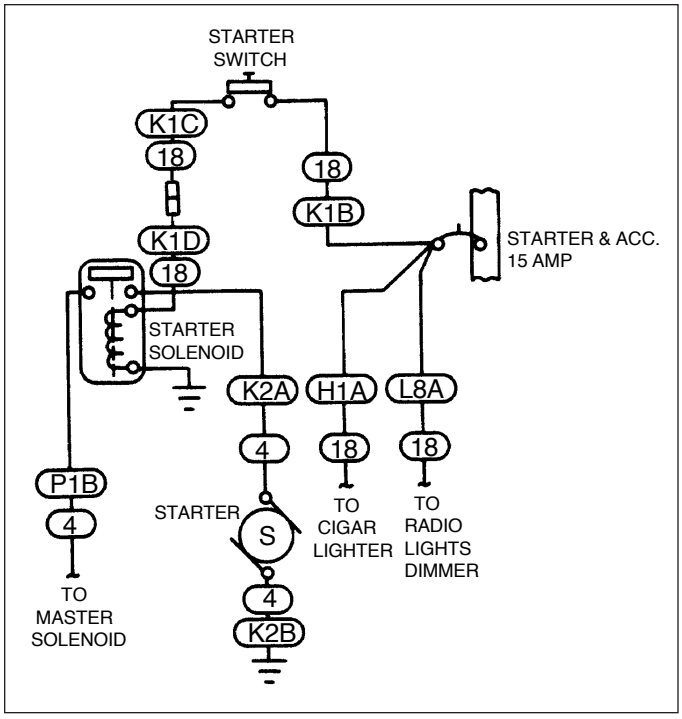

Starter (PA-32R-301T S/N's 32R-8029001 thru 32R-8029121)

Figure 91-11

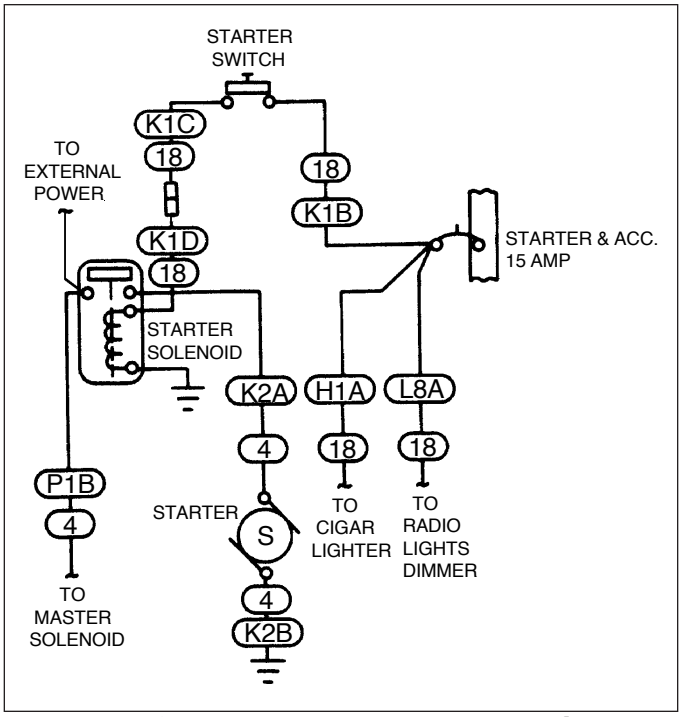

Starter (PA-32R-301 S/N's 32R-8013001 thru 32R-8013119)

Figure 91-11A

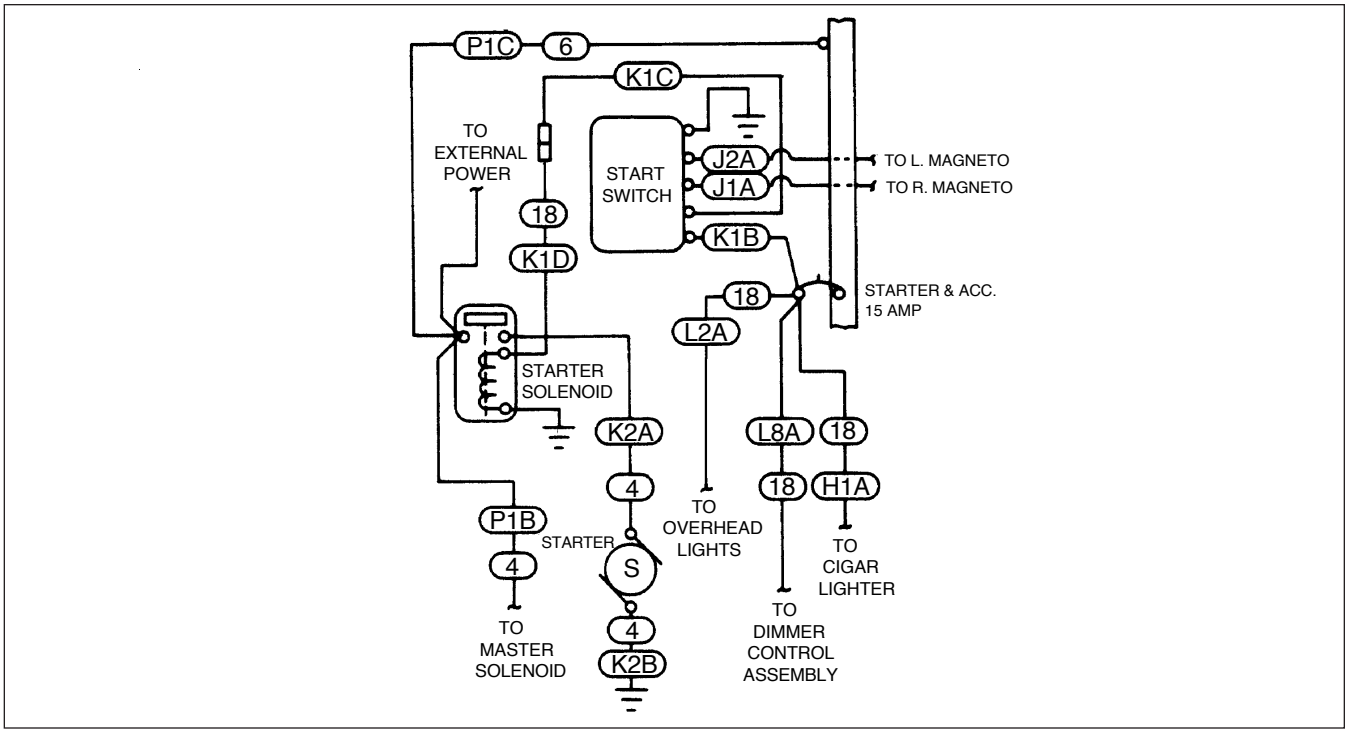

Starter (PA-32R-301 S/N's 32R-8013120 and up, 3213001 thru 3213028, 3213030 thru 3213041)
(PA-32R-301T S/N's 32R-8129001 and up)

Figure 91-11B

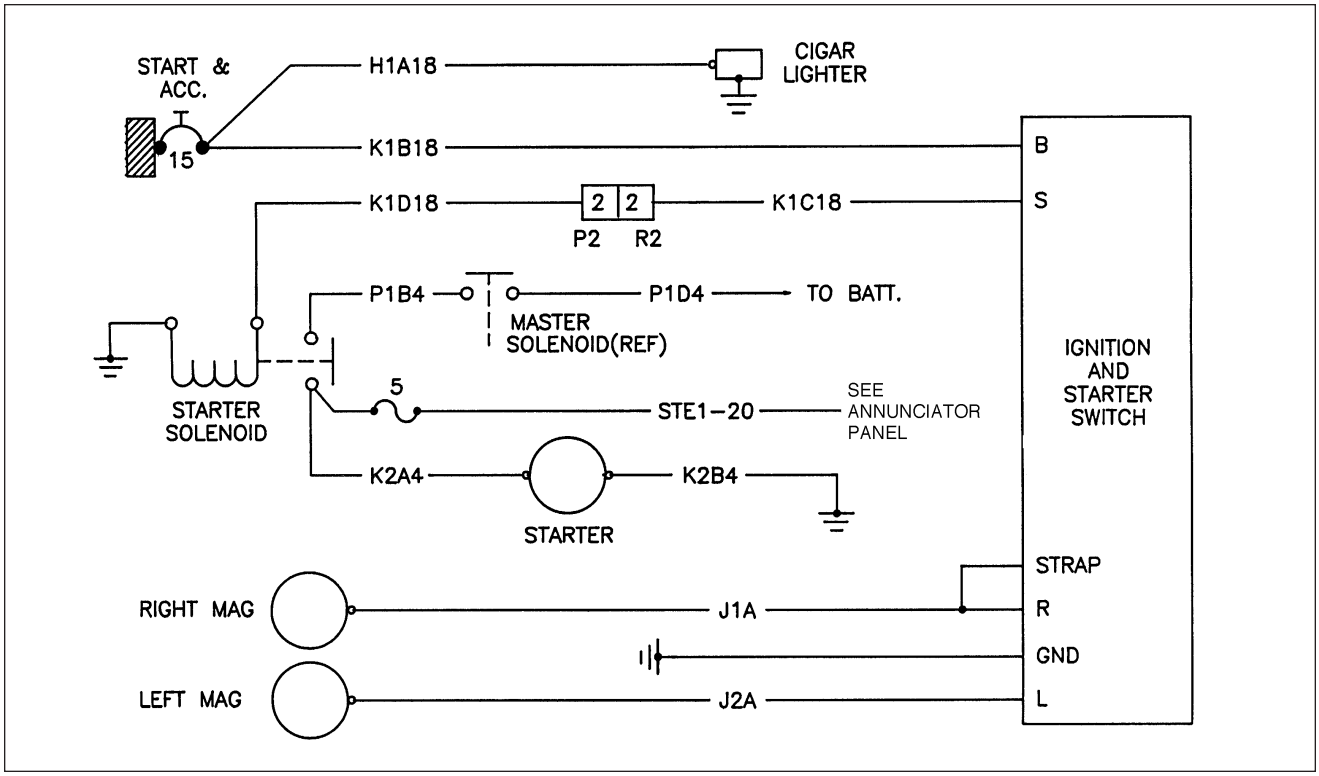

Starter and Accessories (PA-32R-301 S/N's 3213029 and 3213042 and up)
Figure 91-11C

THIS SPACE INTENTIONALLY LEFT BLANK

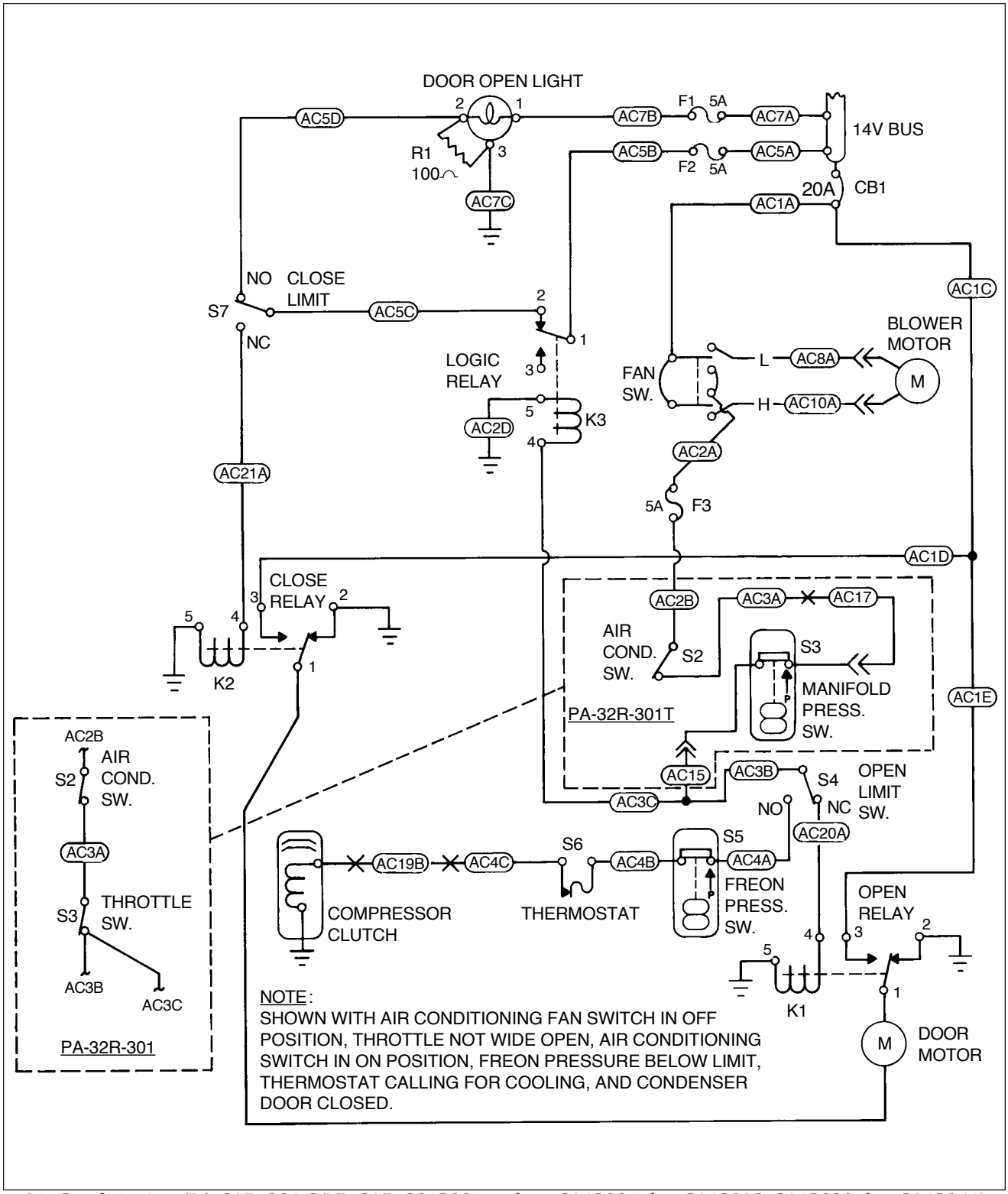

Air Conditioning (PA-32R-301 S/N's 32R-8013001 and up, 3213001 thru 3213028, 3213030 thru 3213041) (PA-32R-301T)

Figure 91-12 (Sheet 1 of 2)

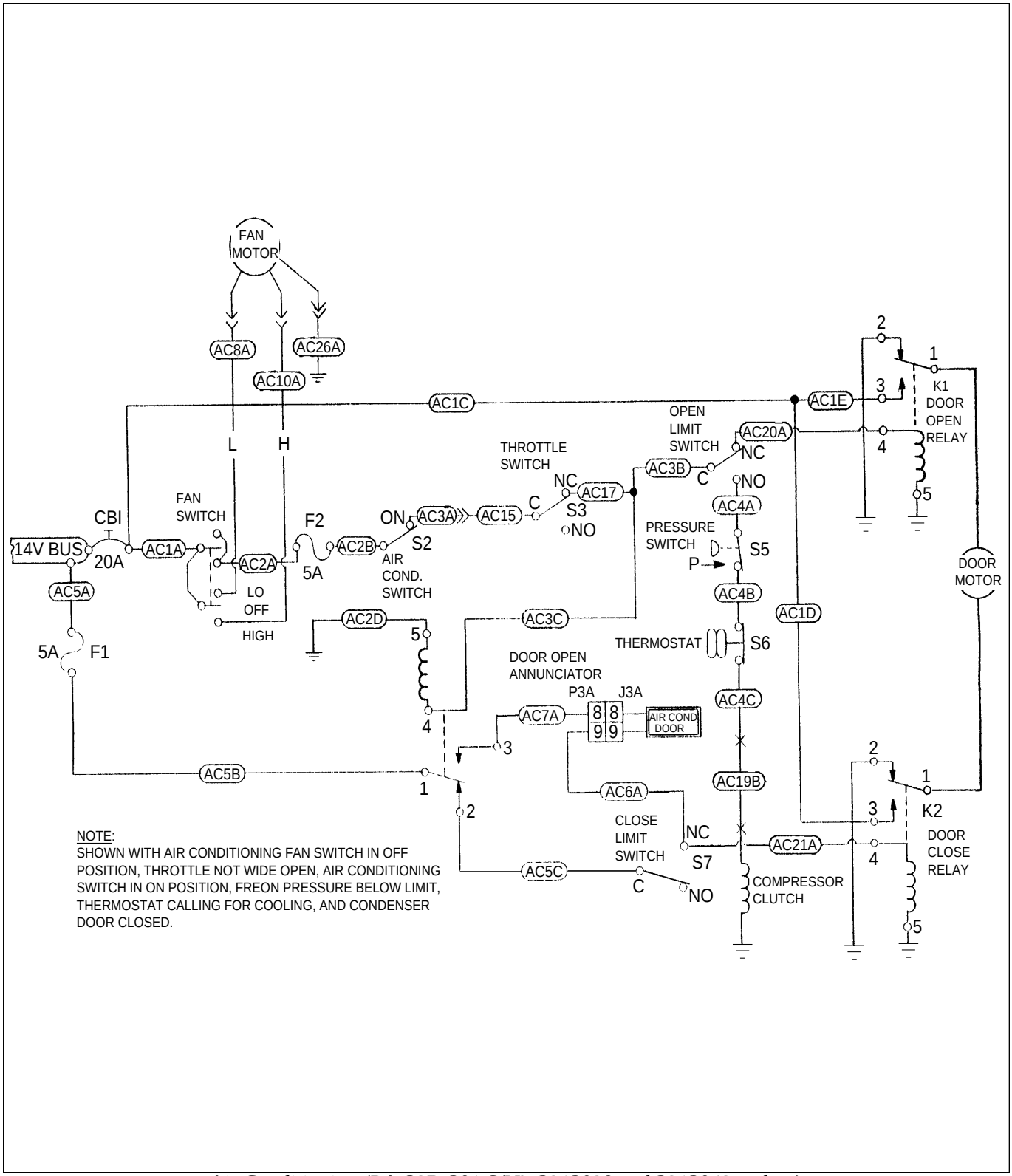

Air Conditioning (PA-32R-301 S/N's 3213029 and 3213042 and up)
Figure 91-12 (Sheet 2 of 2)

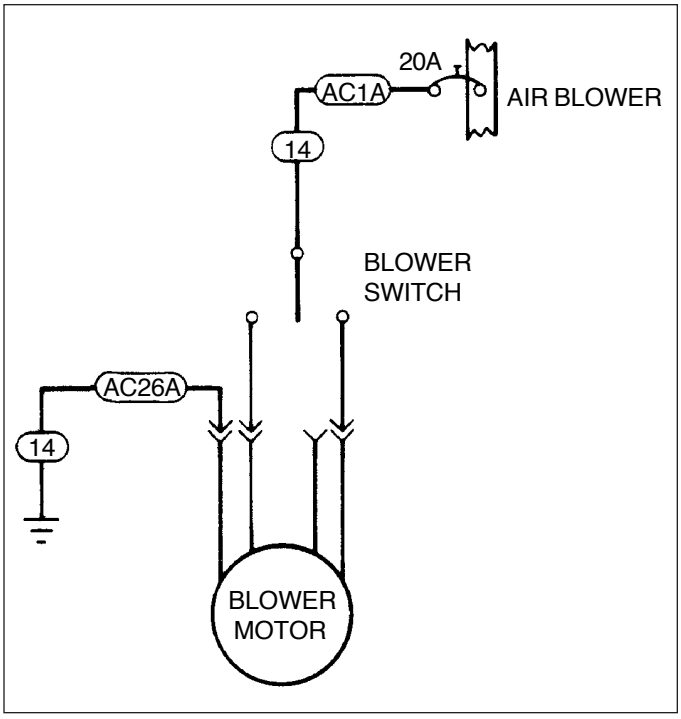

Ventilation Blower (PA-32R-301 S/N's 32R-8013001 thru 32R-8013139) (PA-32R-301T S/N's 32R-8029001 thru 32R-8029121)

Figure 91-13

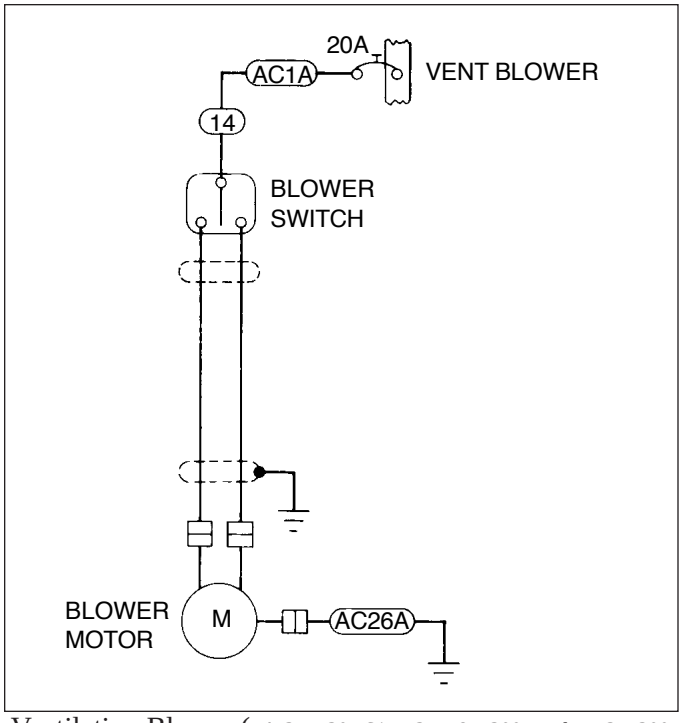

Ventilation Blower (PA-32R-301 S/N's 32R-8113001 and up, 3213001 thru 3213028, 3213030 thru 3213041 and PA-32R-301T S/N's 32R-8129001 and up)

Figure 91-13A

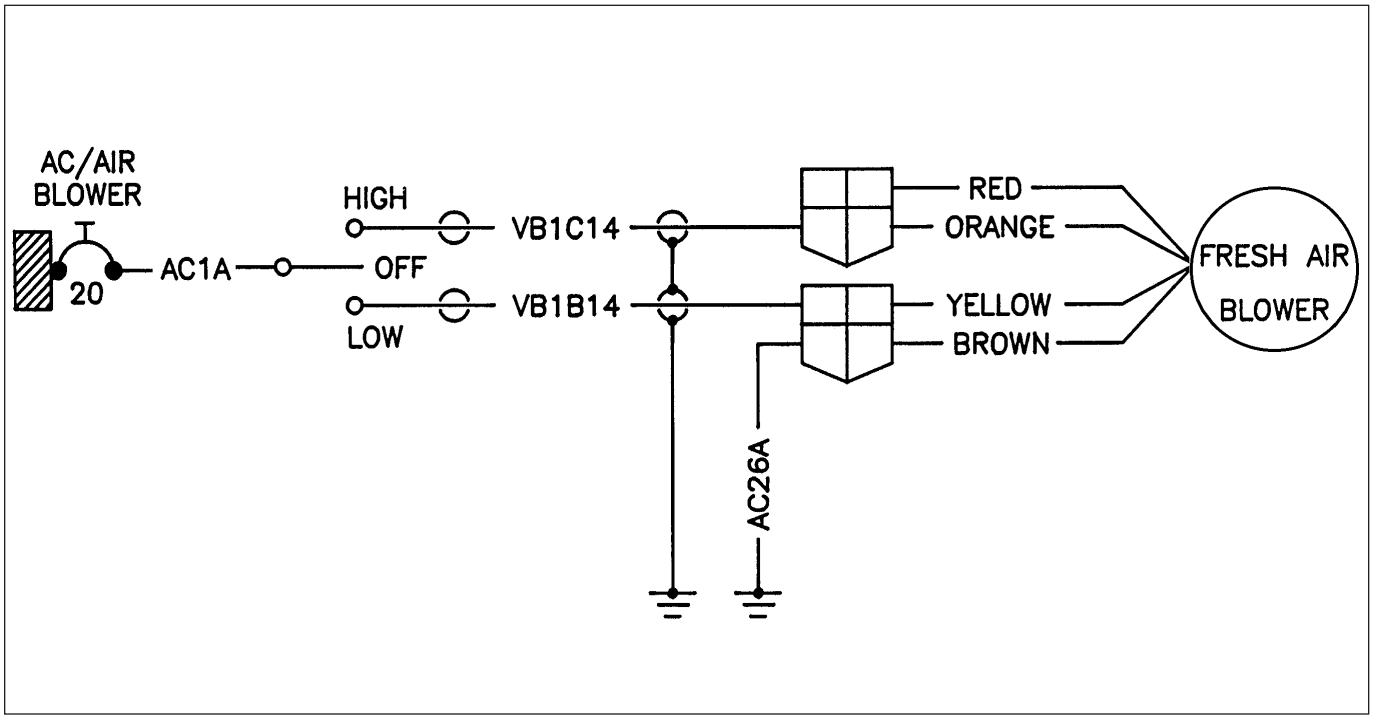

Ventilation Blower (PA-32R-301 S/N's 3213029 and 3213042 and up)

Figure 91-13B

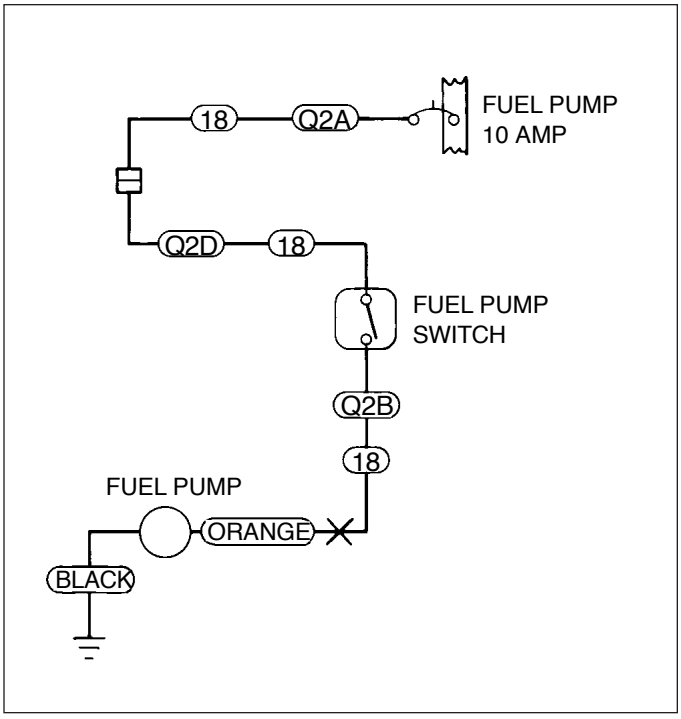

Fuel Pump (PA-32R-301/301T Early Models)
Figure 91-14

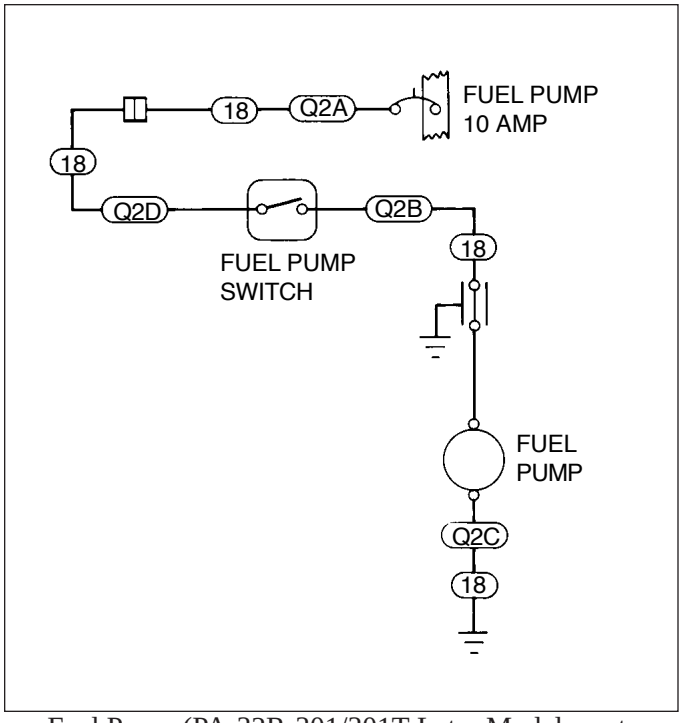

Fuel Pump (PA-32R-301/301T Later Models, not including S/N's 3213029 and 3213042 and up)
Figure 91-14A

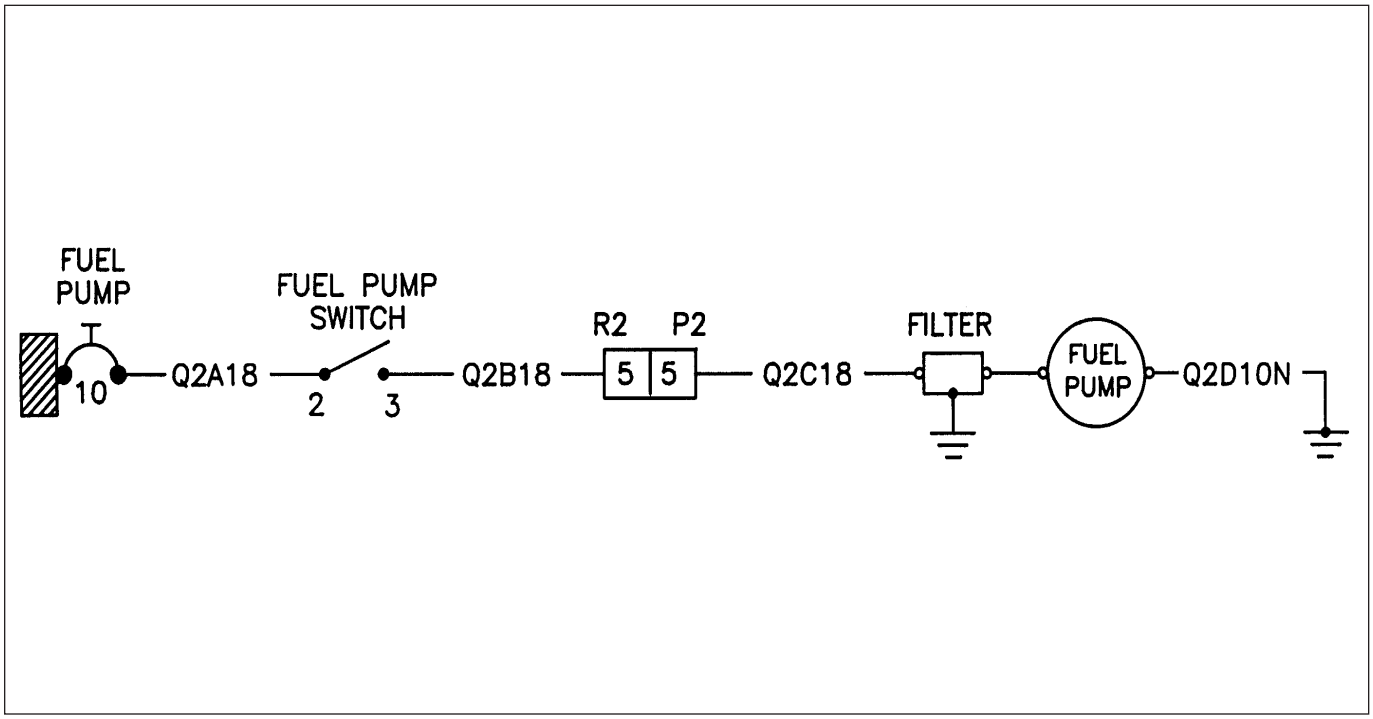

Fuel Pump (PA-32R-301 S/N's 3213029 and 3213042 and up)
Figure 91-14B

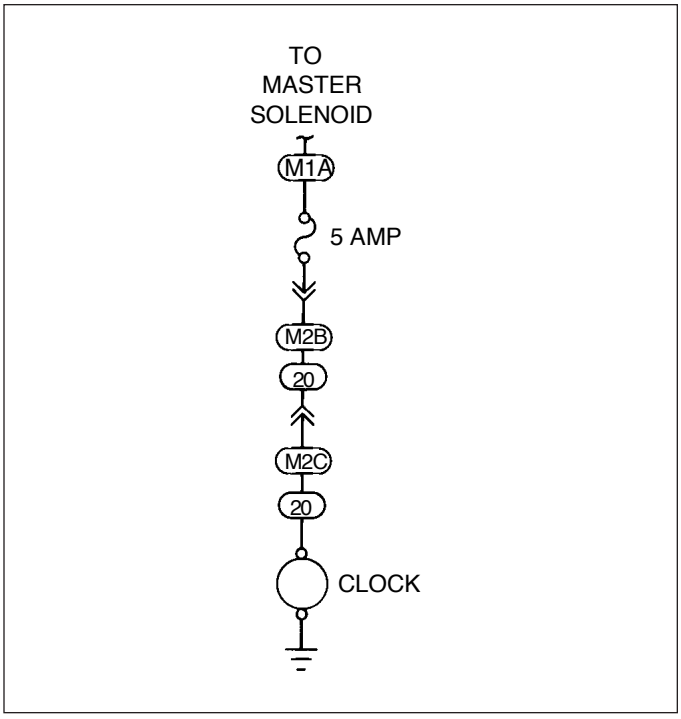

Clock - Analog (PA-32R-301 S/N's 32R-8013001 thru 32R-8013139)

Figure 91-15

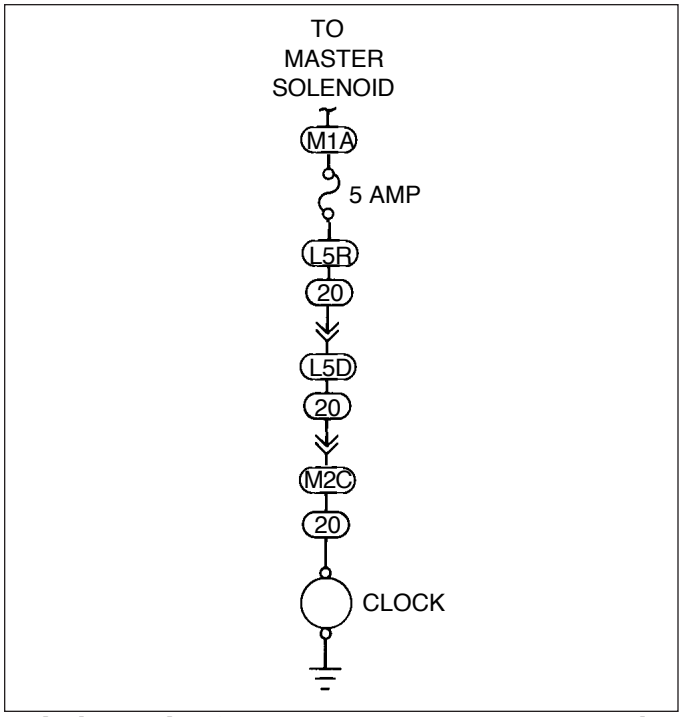

Clock - Analog (PA-32R-301T S/N's 32R-8029001 thru 32R-8029121)

Figure 91-15A

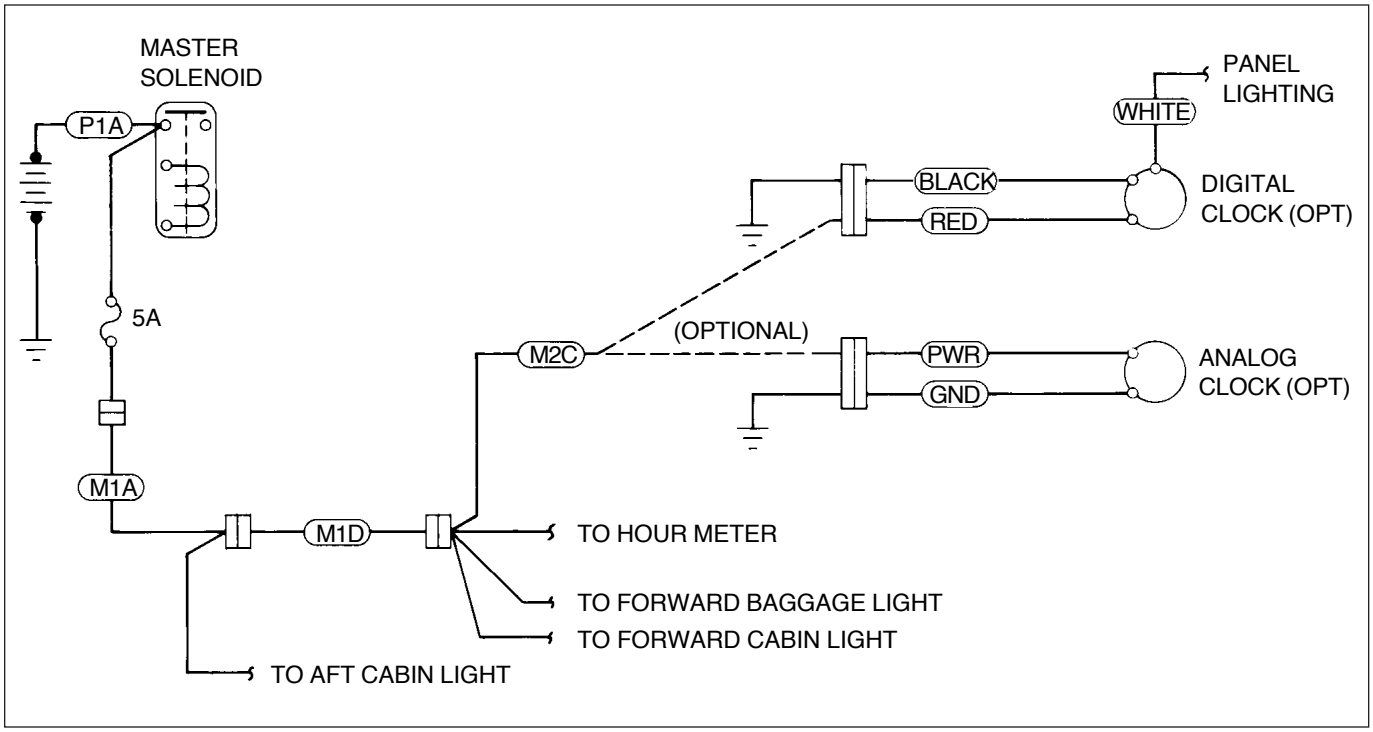

Analog and Digital Clock, Option (PA-32R-301 S/N's 32R-8113001 and up, 3213001 thru 3213028, 3213030 thru 3213041) (PA-32R-301T S/N's 32R-8129001 and up)

Figure 91-15B

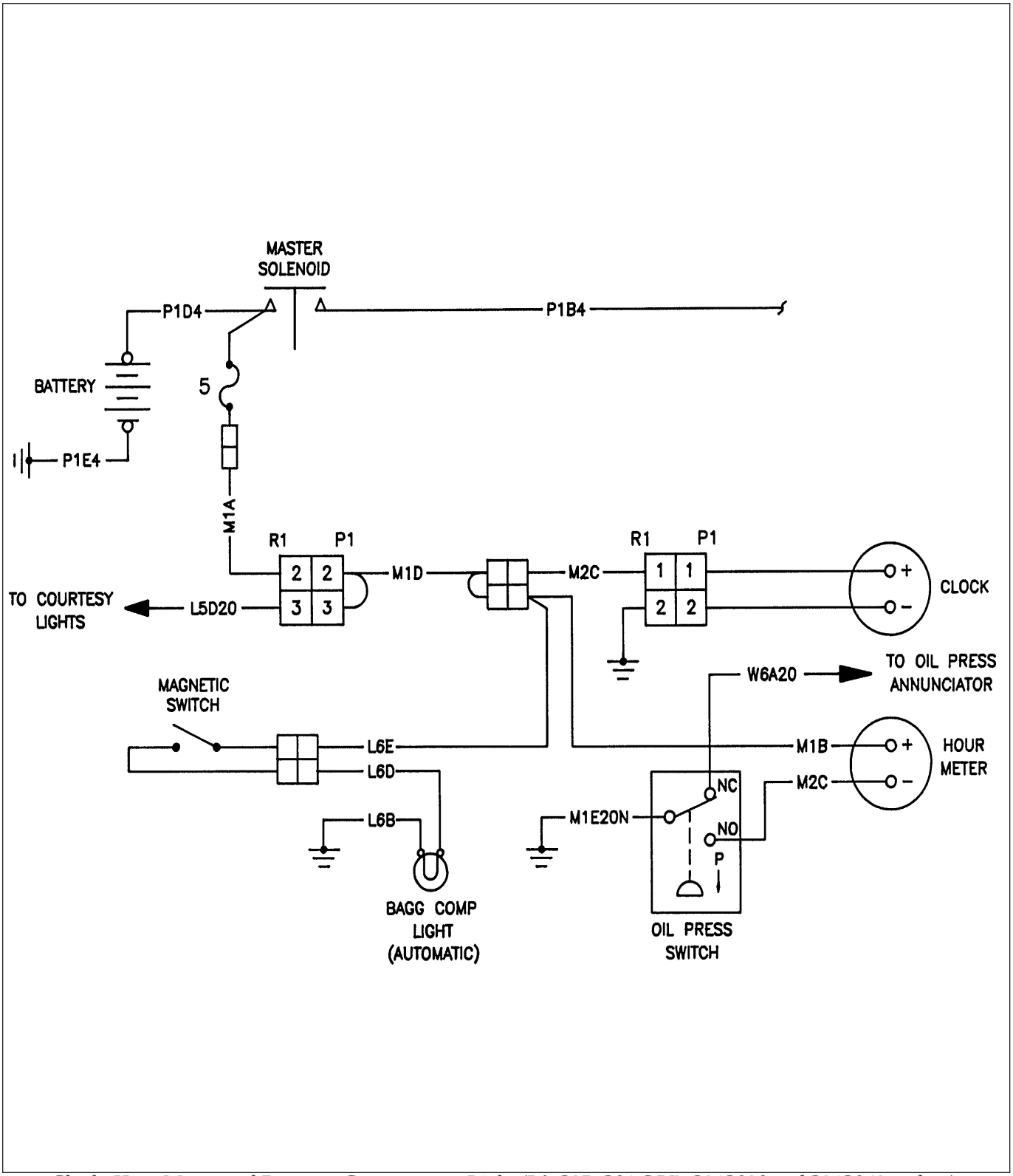

Clock, Hour Meter, and Baggage Compartment Light (PA-32R-301 S/N's 3213029 and 3213042 and up)
Figure 91-15C

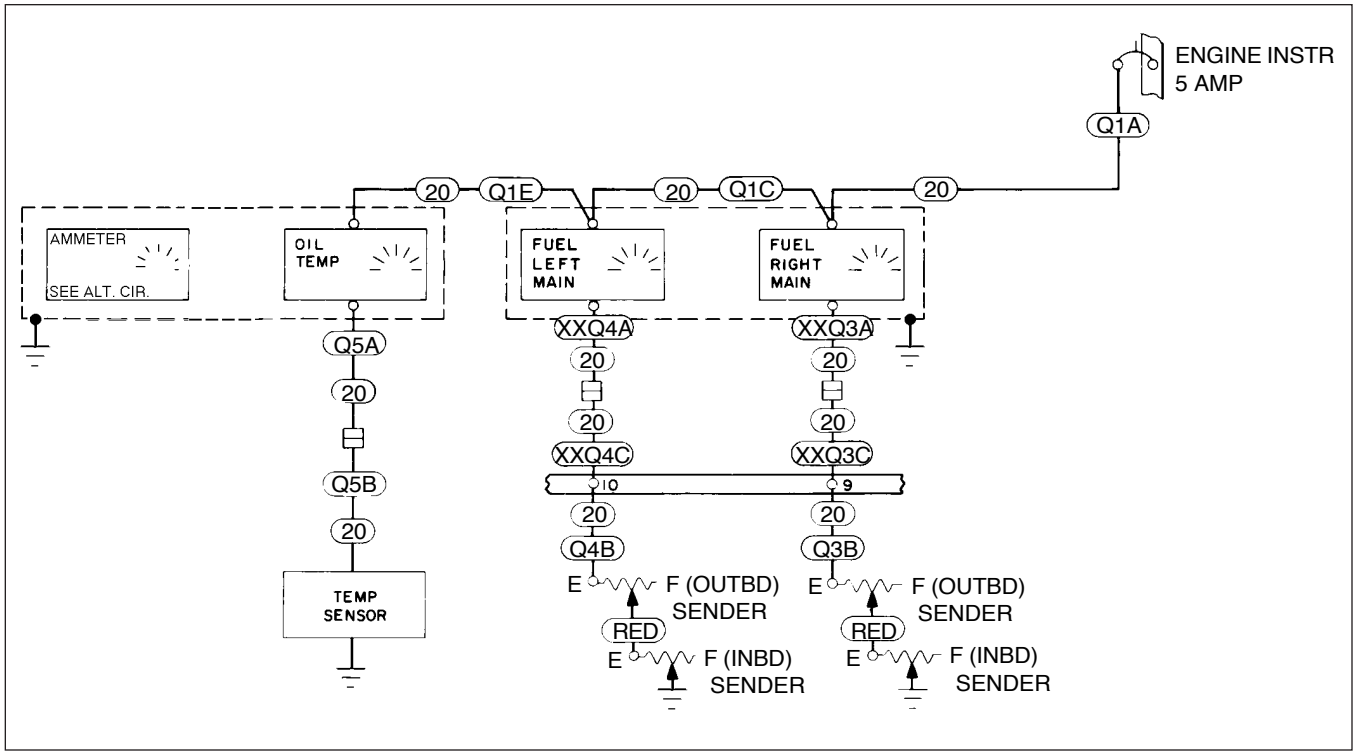

Engine Instruments (PA-32R-301 Early Models)
Figure 91-16

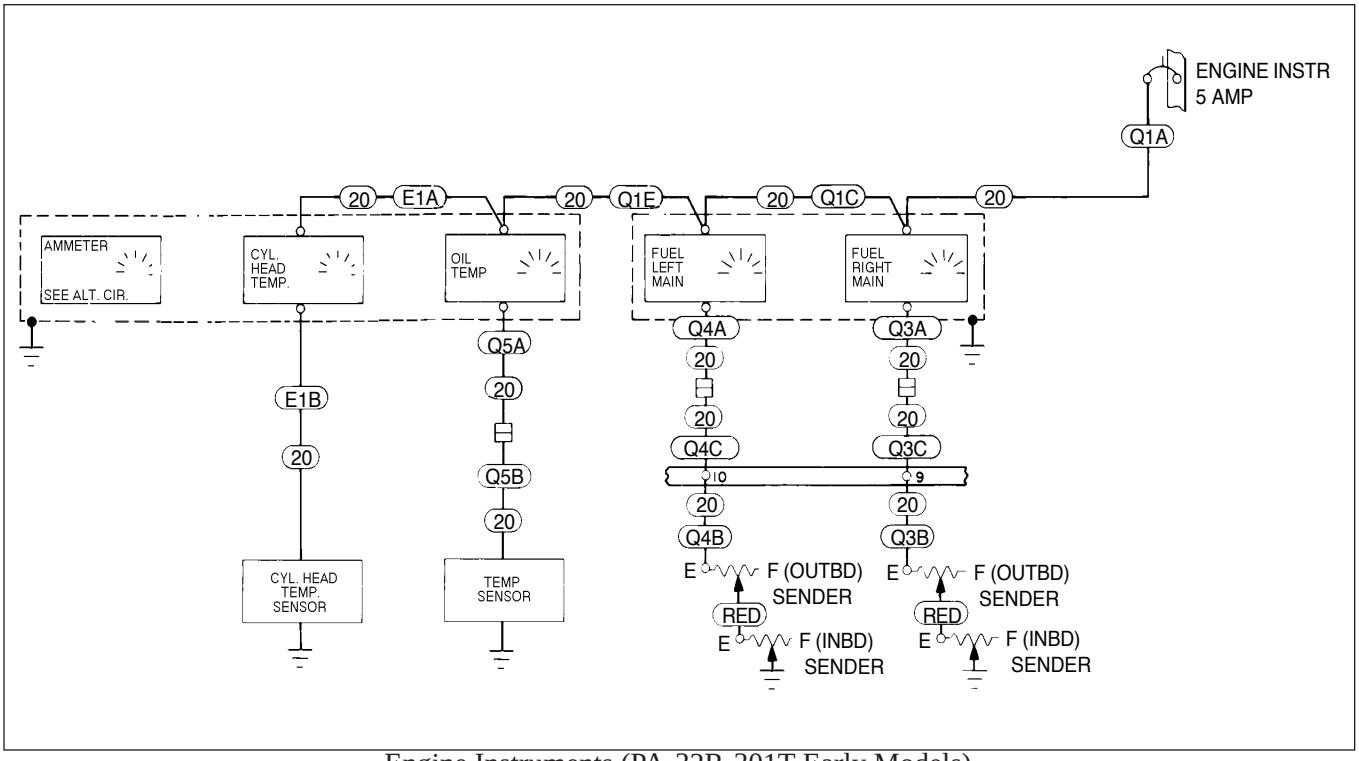

Engine Instruments (PA-32R-301T Early Models)
Figure 91-16A

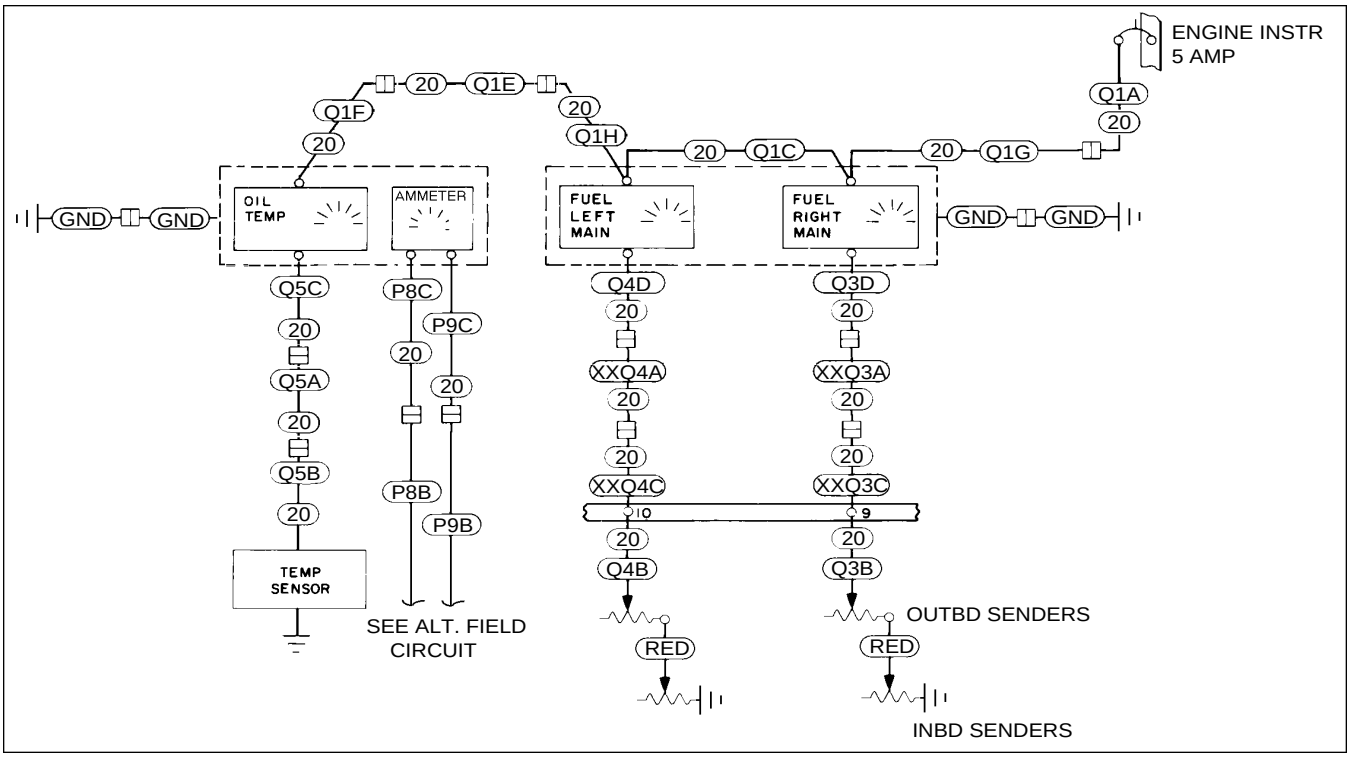

Engine Instruments (PA-32R-301 Later Models, not including S/N's 3213029 and 3213042 and up)
Figure 91-16B

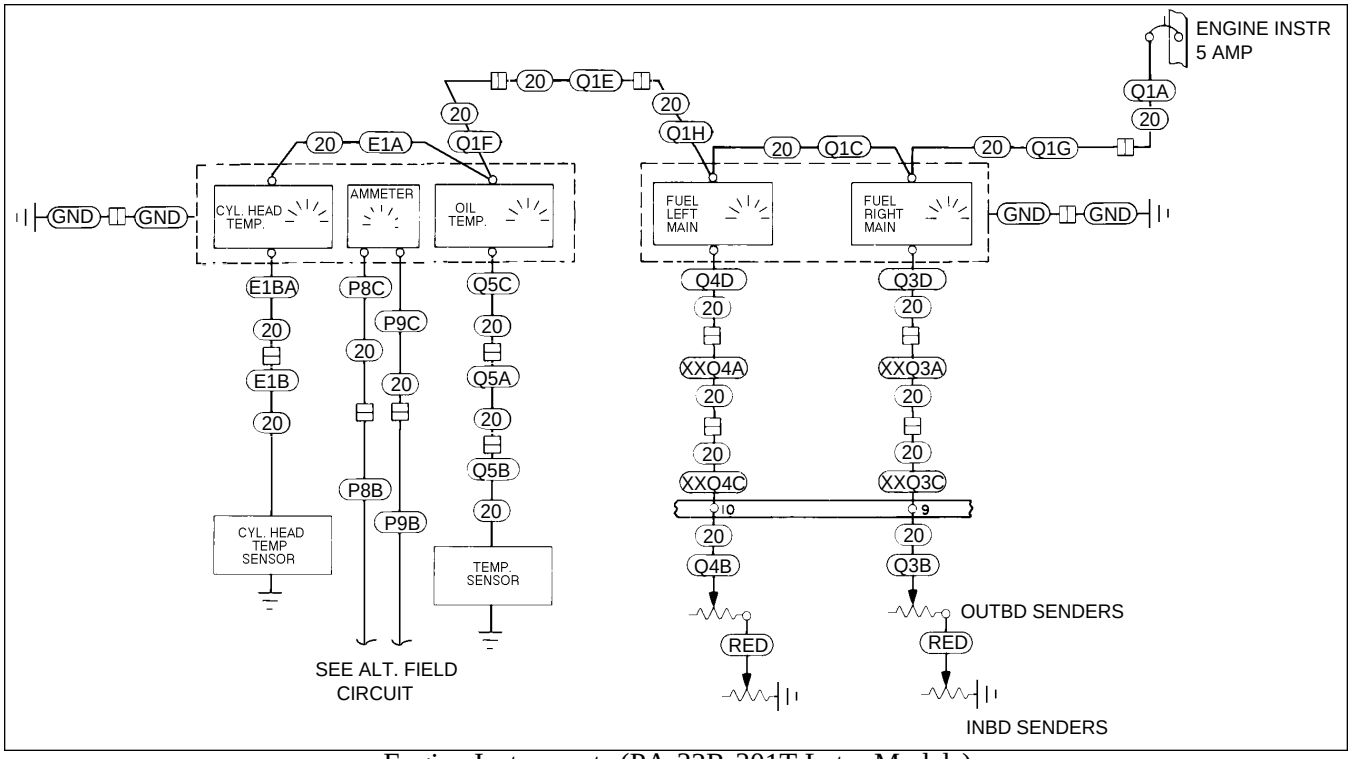

Engine Instruments (PA-32R-301T Later Models)
Figure 91-16C

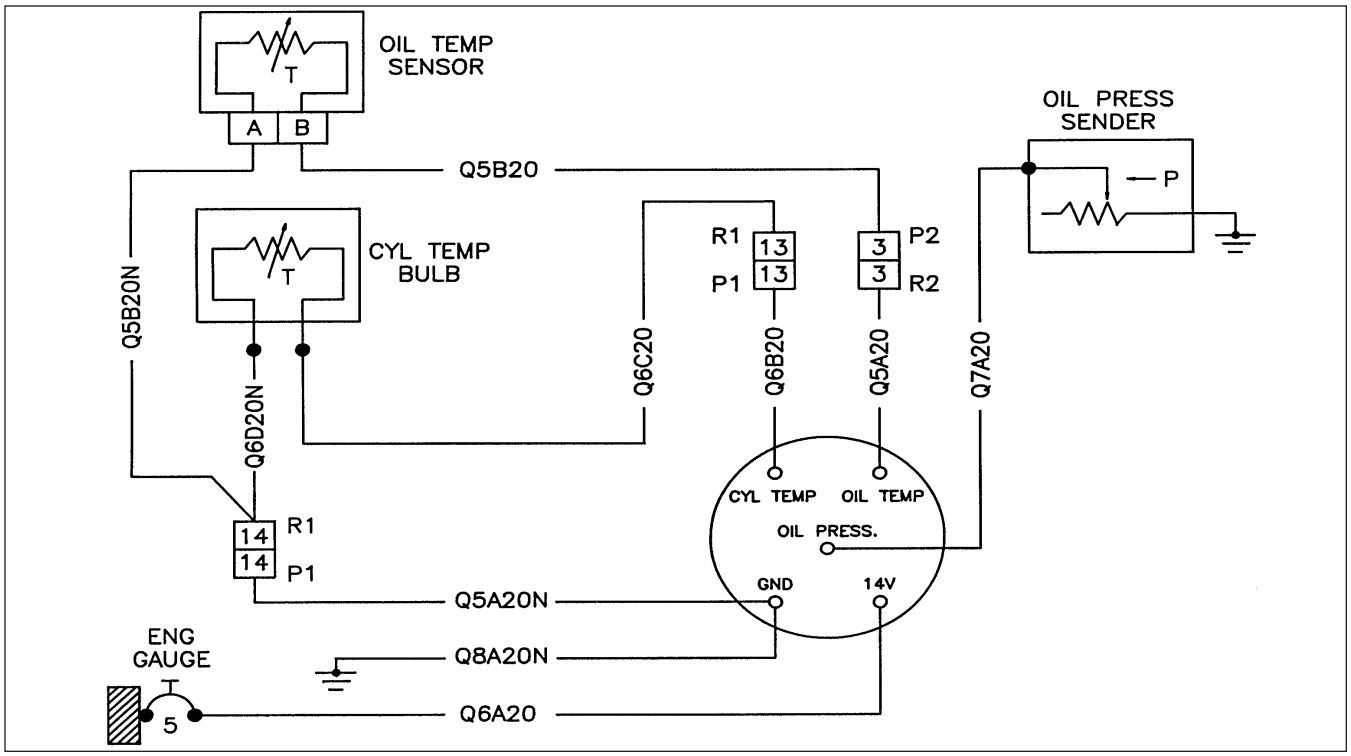

Engine Gauge (PA-32R-301 S/N's 3213029 and 3213042 and up)
Figure 91-16D

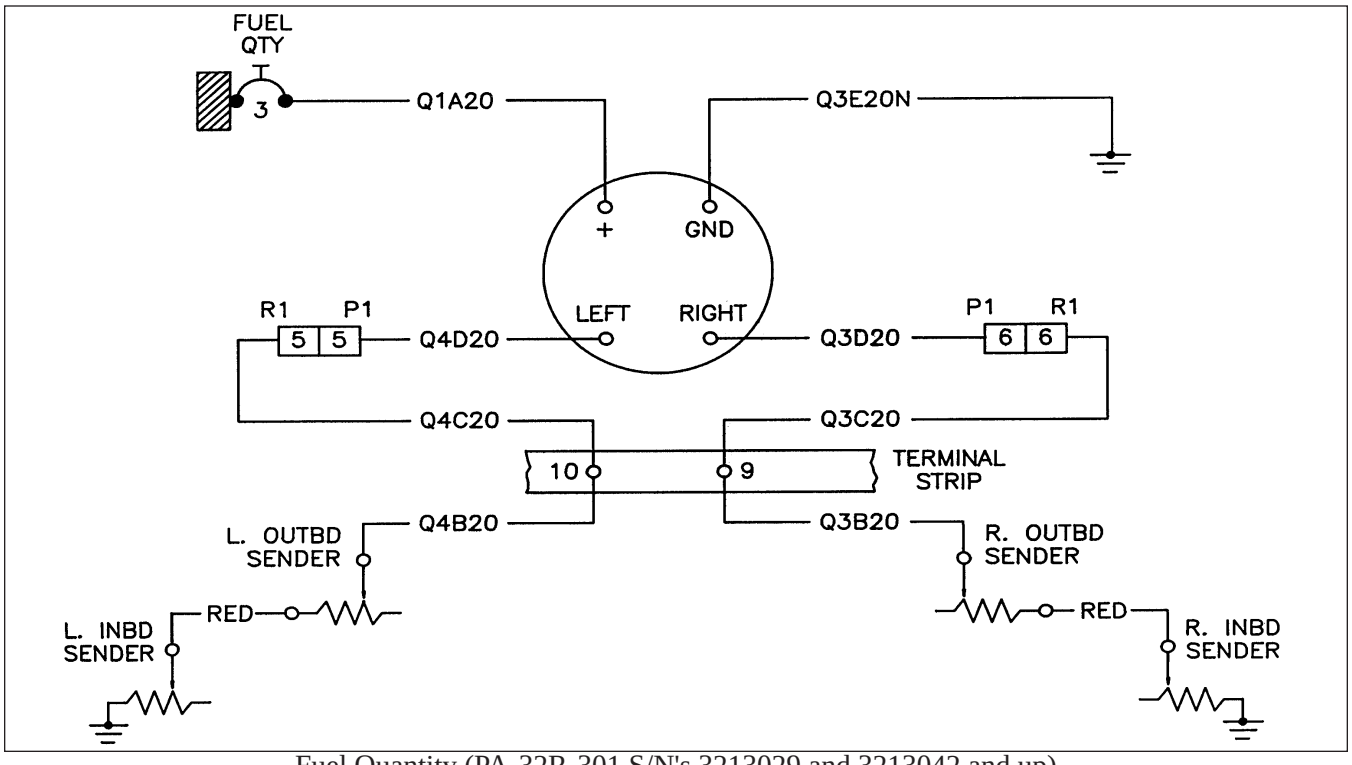

Fuel Quantity (PA-32R-301 S/N's 3213029 and 3213042 and up)
Figure 91-16E

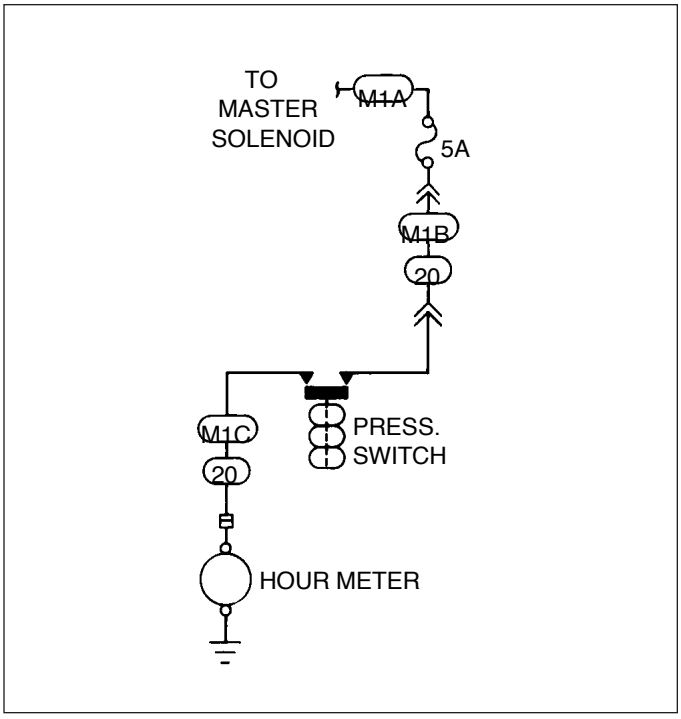

Hour Meter (PA-32R-301, not including S/N's 3213029 and 3213042 and up)
Figure 91-17

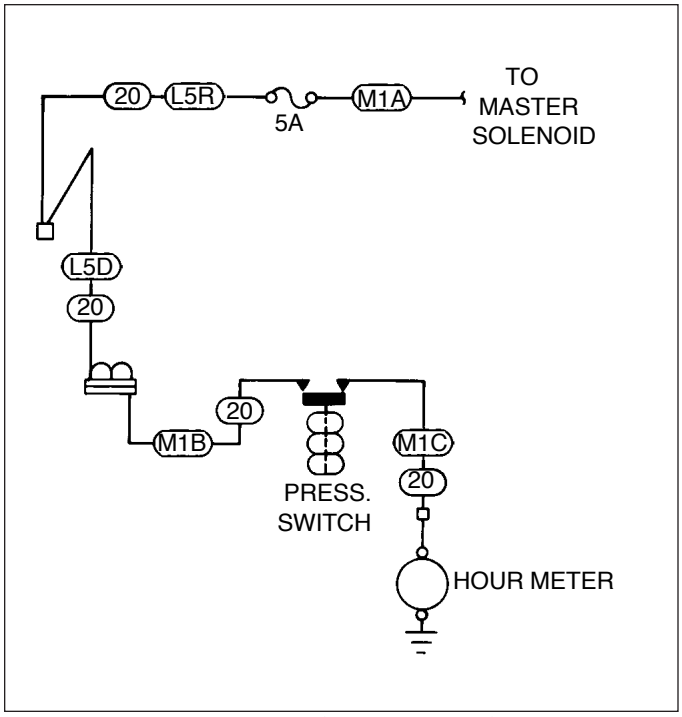

Hour Meter (PA-32R-301T)
Figure 91-17A

THIS SPACE INTENTIONALLY LEFT BLANK

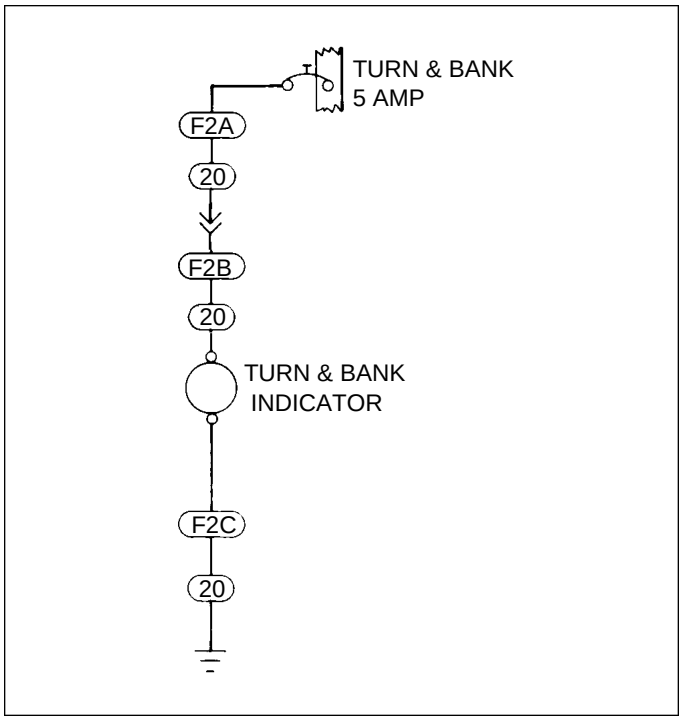

THIS SPACE INTENTIONALLY LEFT BLANK

Turn and Bank (PA-32R-301/301T Early Models)
Figure 91-18

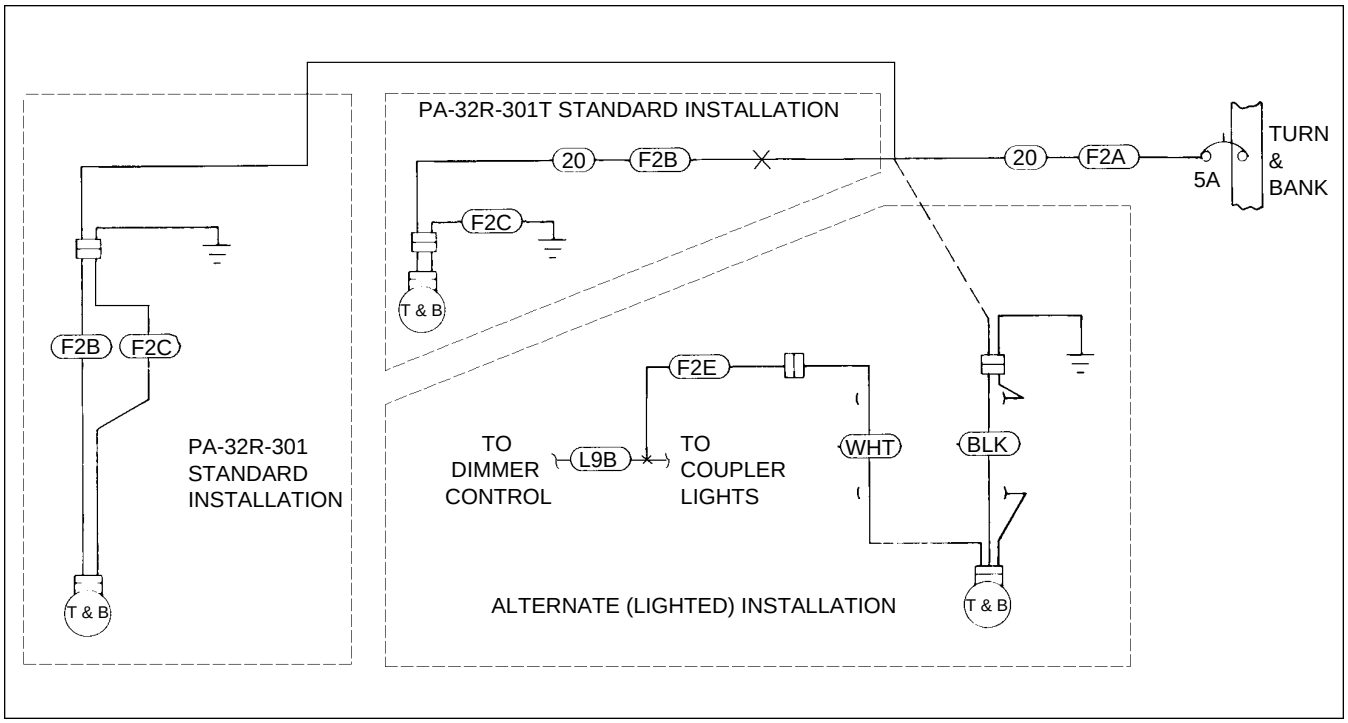

Turn and Bank (PA-32R-301 S/N's 32R-8013120 and up, 3213001 thru 3213028, 3213030 thru 3213041)
(PA-32R-301T S/N's 32R-8029108 and up)
Figure 91-18A

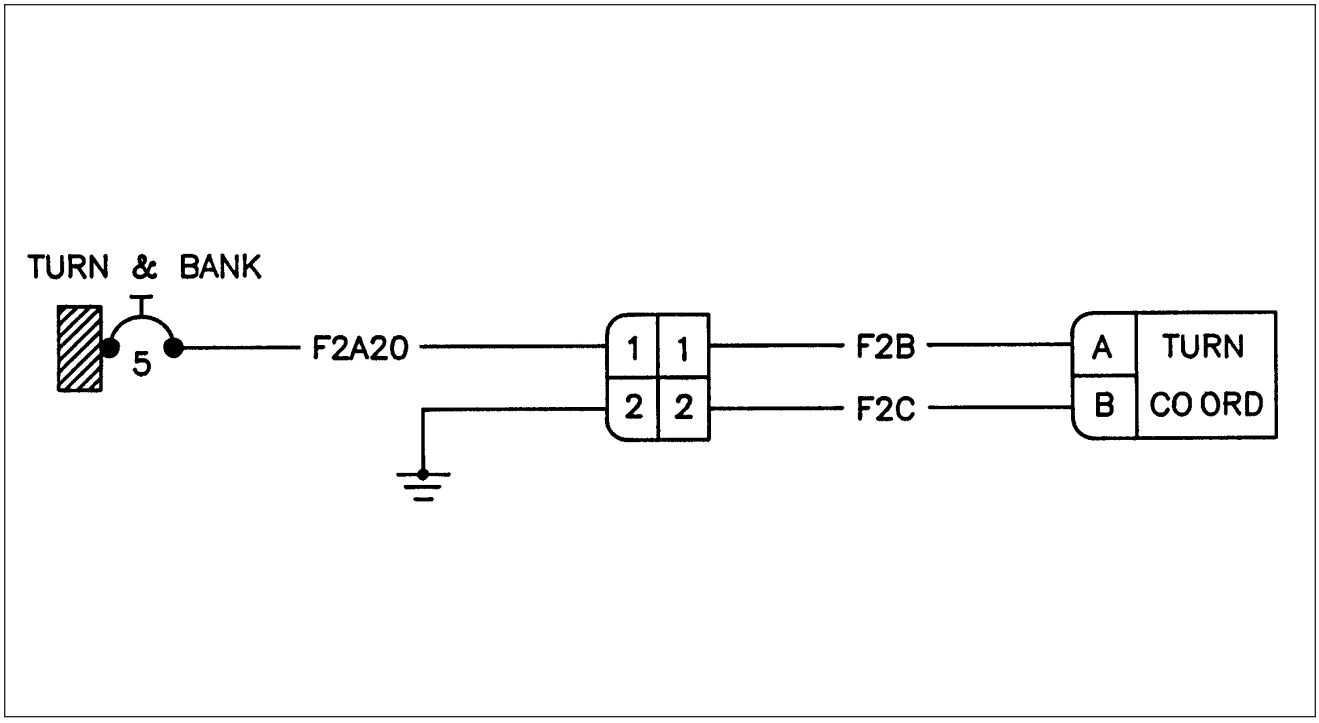

Turn and Bank (PA-32R-301 S/N's 3213029 and 3213042 and up)
Figure 91-18B

THIS SPACE INTENTIONALLY LEFT BLANK

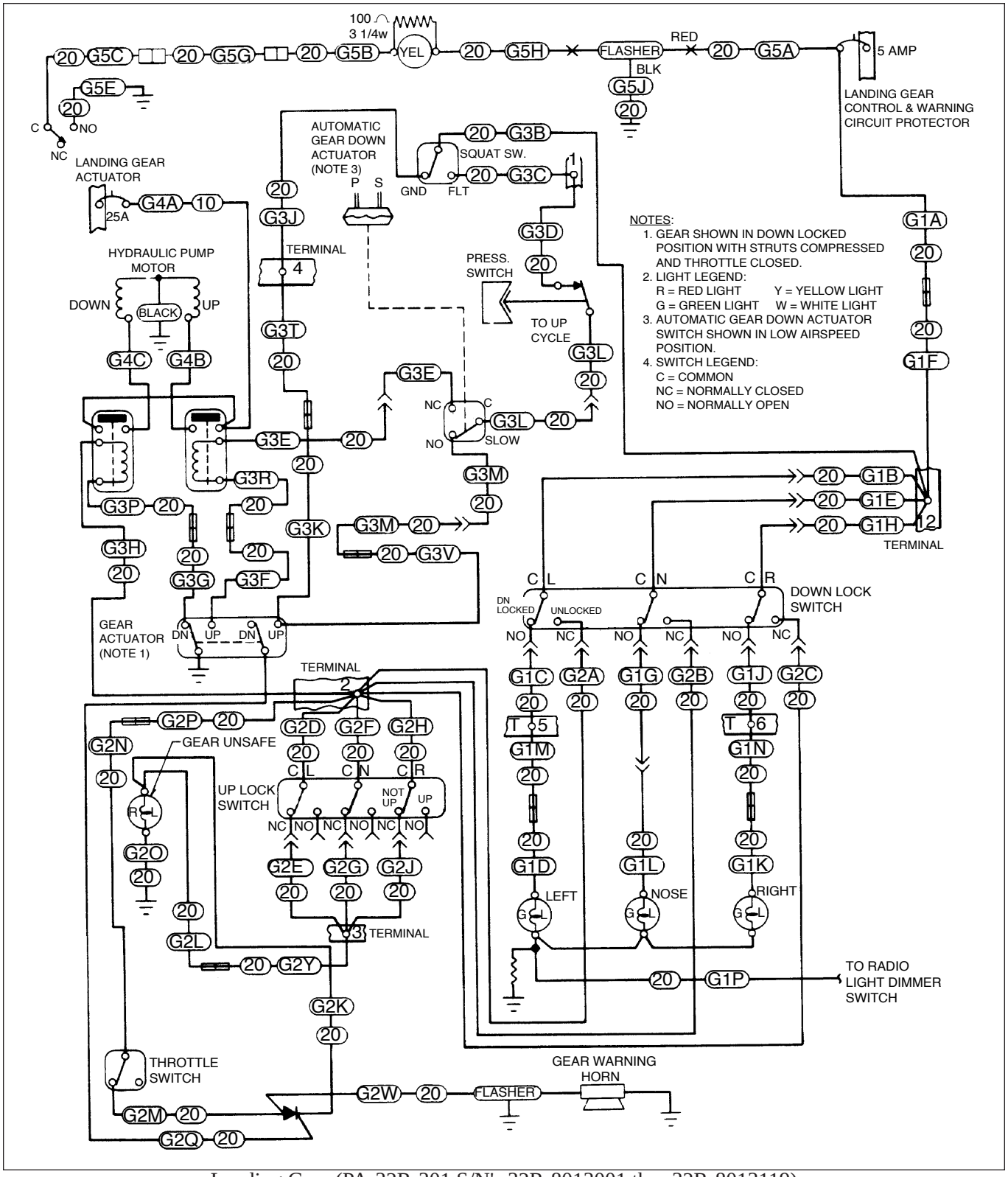

Landing Gear (PA-32R-301 S/N's 32R-8013001 thru 32R-8013119)
Figure 91-19 (Sheet 1 of 7)

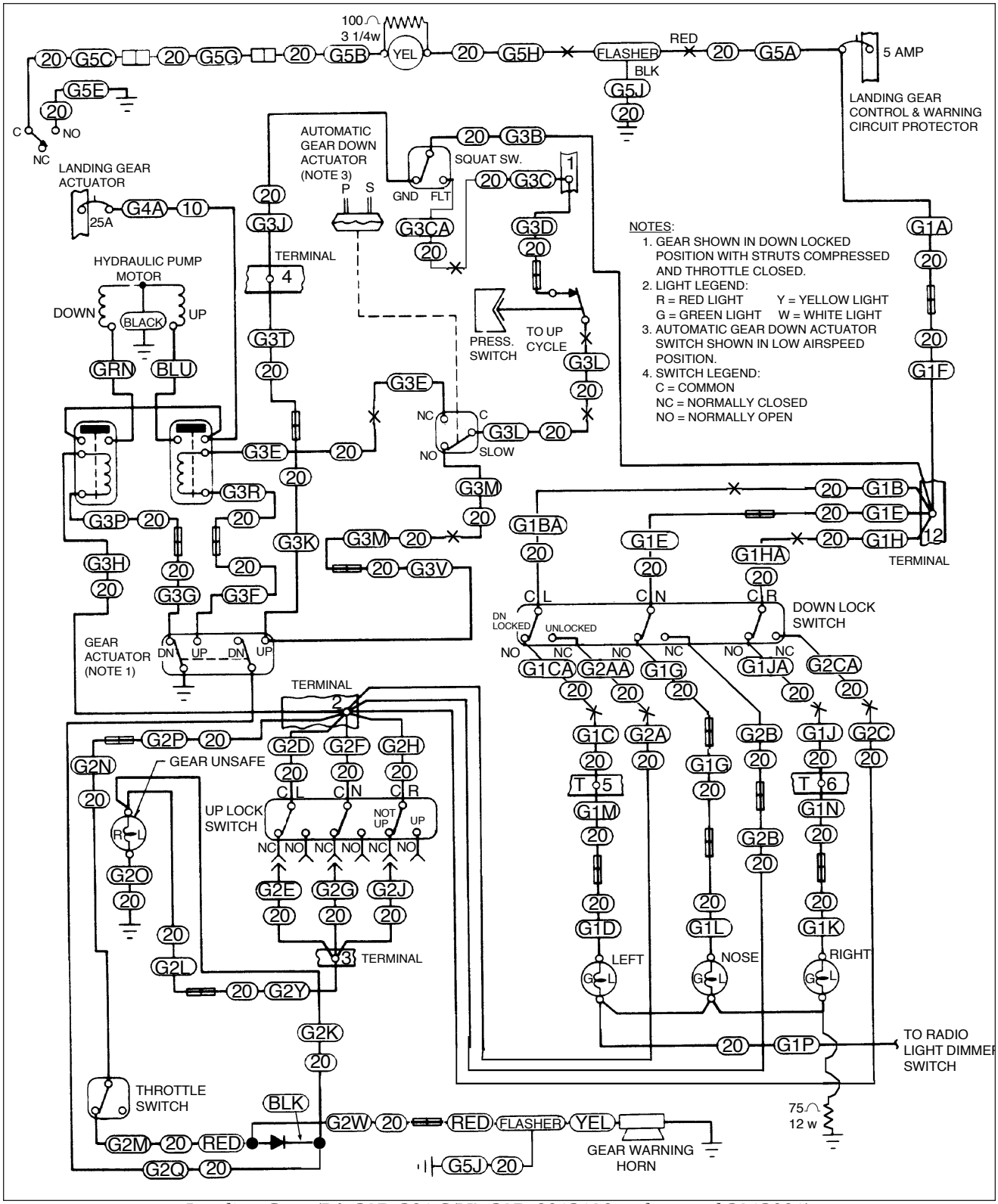

Landing Gear (PA-32R-301 S/N's 32R-8013120 and up, and 3213001)
Figure 91-19 (Sheet 2 of 7)

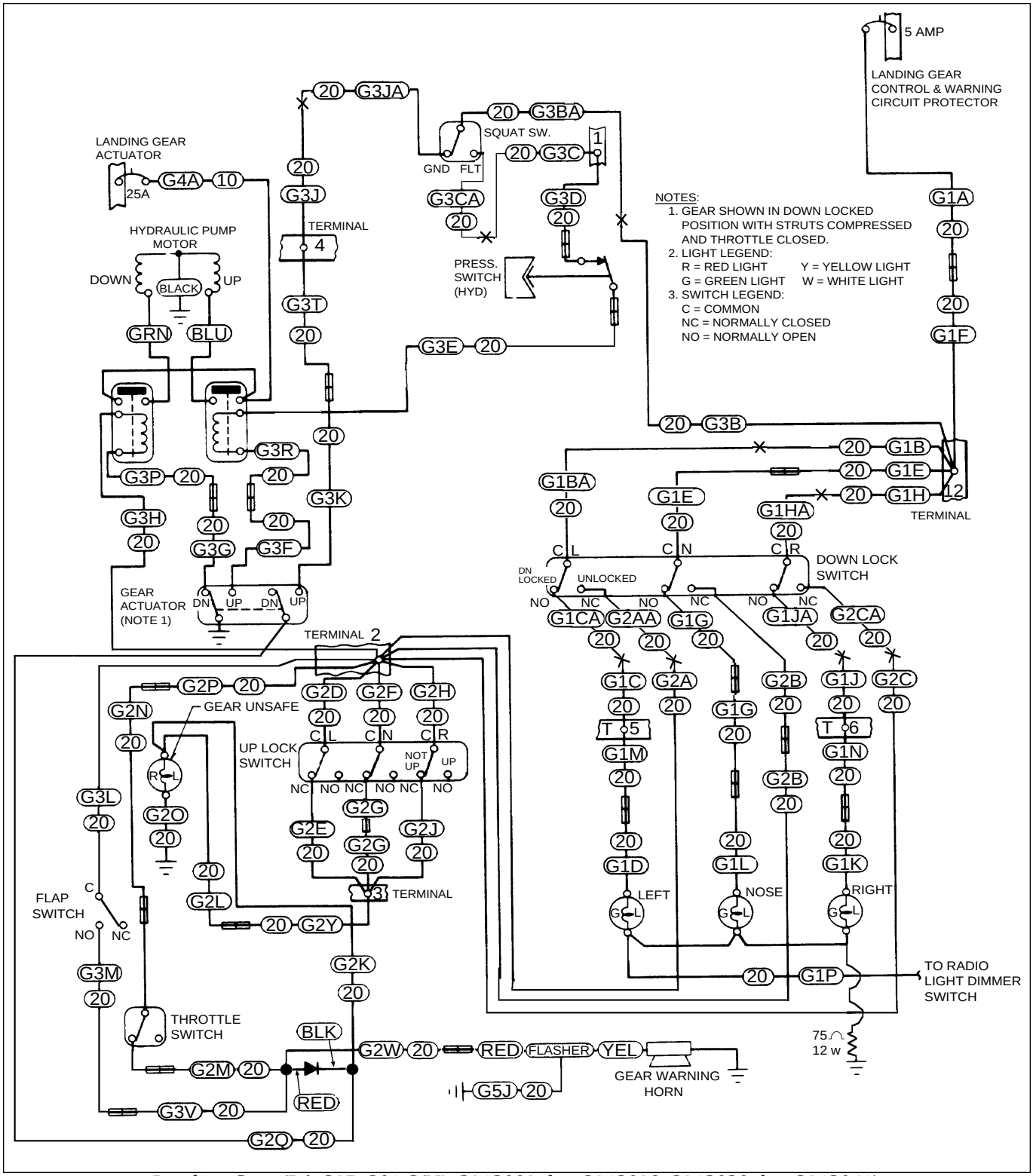

Landing Gear (PA-32R-301 S/N's 3213002 thru 3213028, 3213030 thru 3213041)
(PA-32R-301T S/N's 3229003 and up)
Figure 91-19 (Sheet 3 of 7)

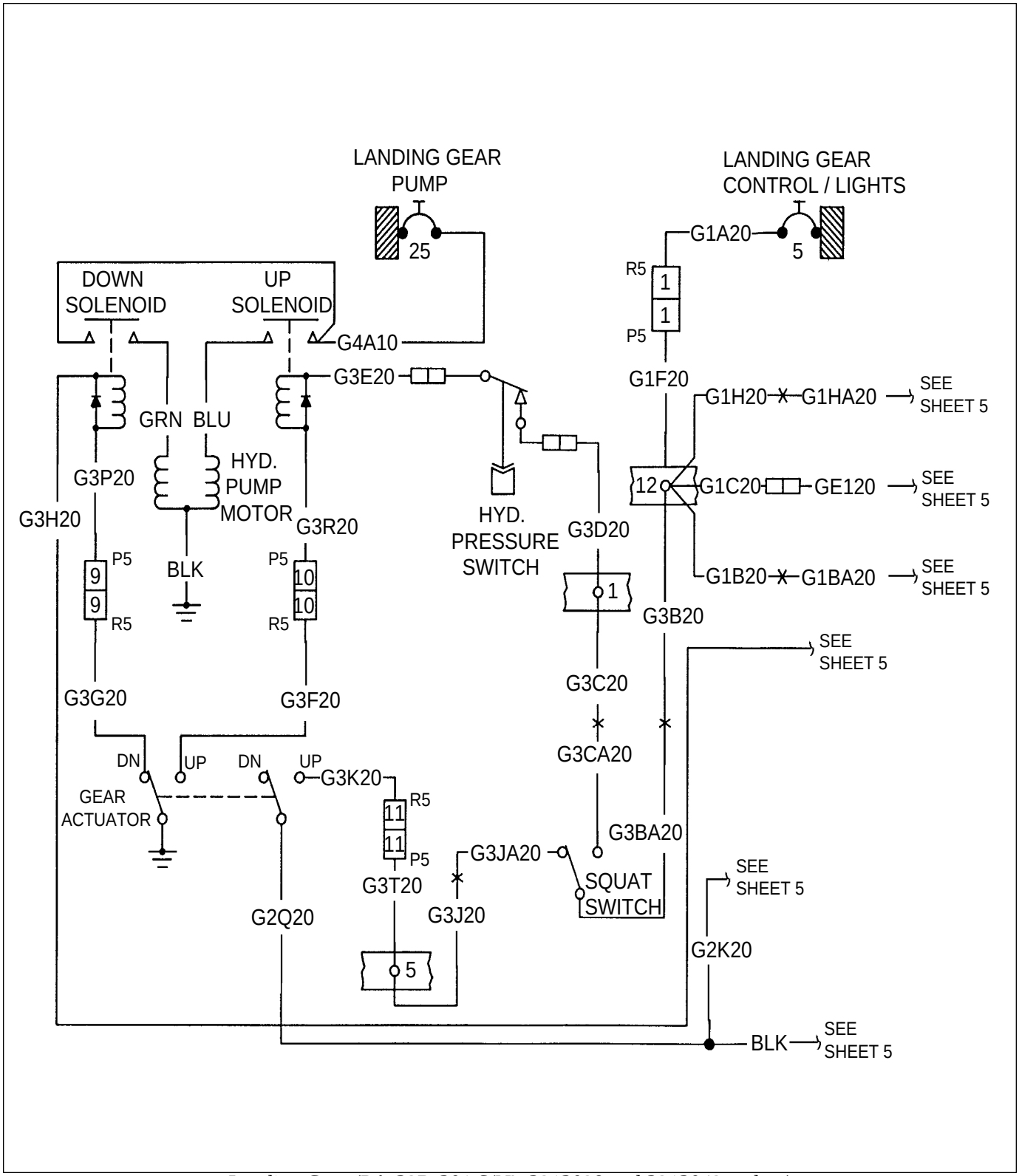

Landing Gear (PA-32R-301 S/N's 3213029 and 3213042 and up)
Figure 91-19 (Sheet 4 of 7)

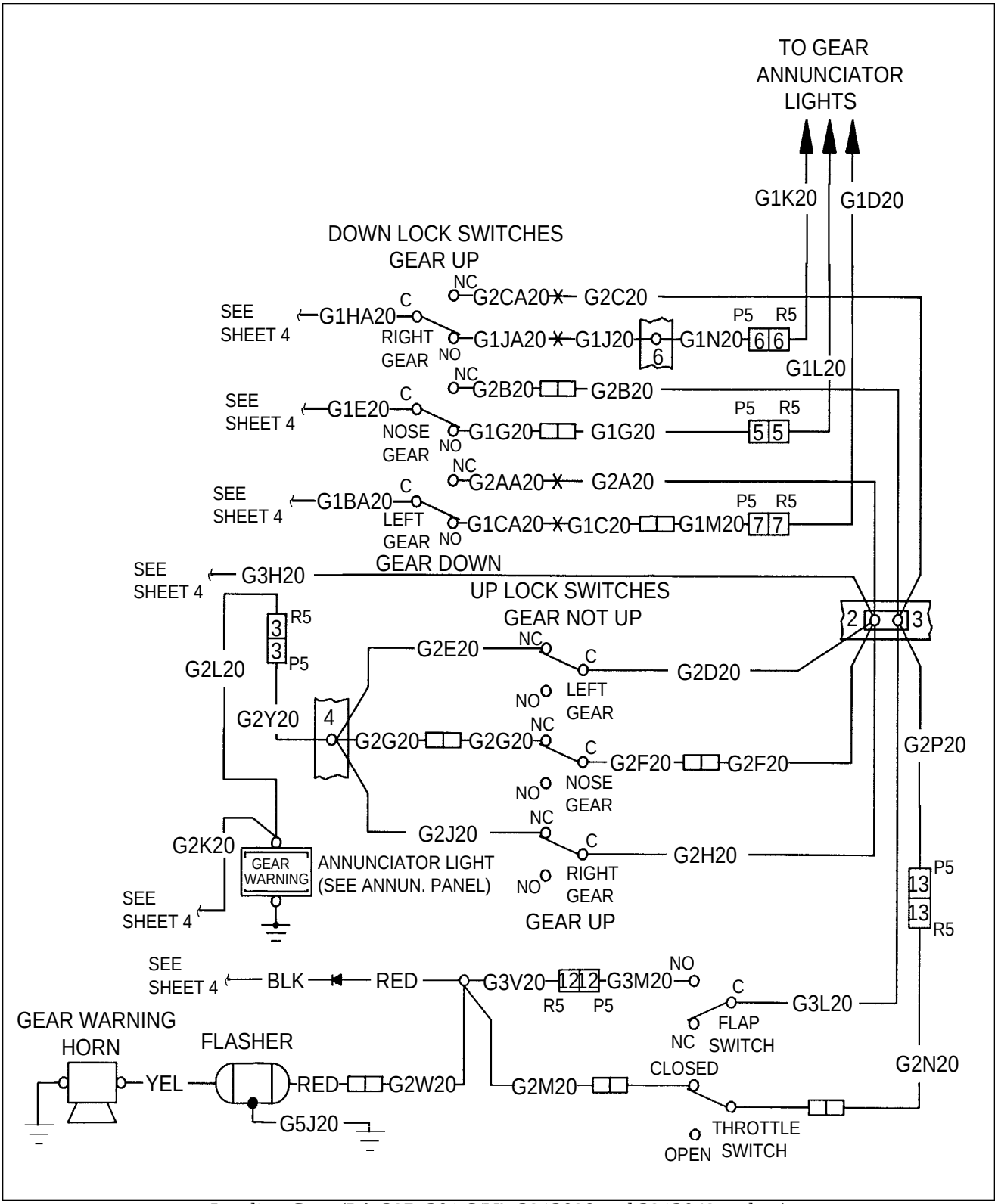

Landing Gear (PA-32R-301 S/N's 3213029 and 3213042 and up)
Figure 91-19 (Sheet 5 of 7)

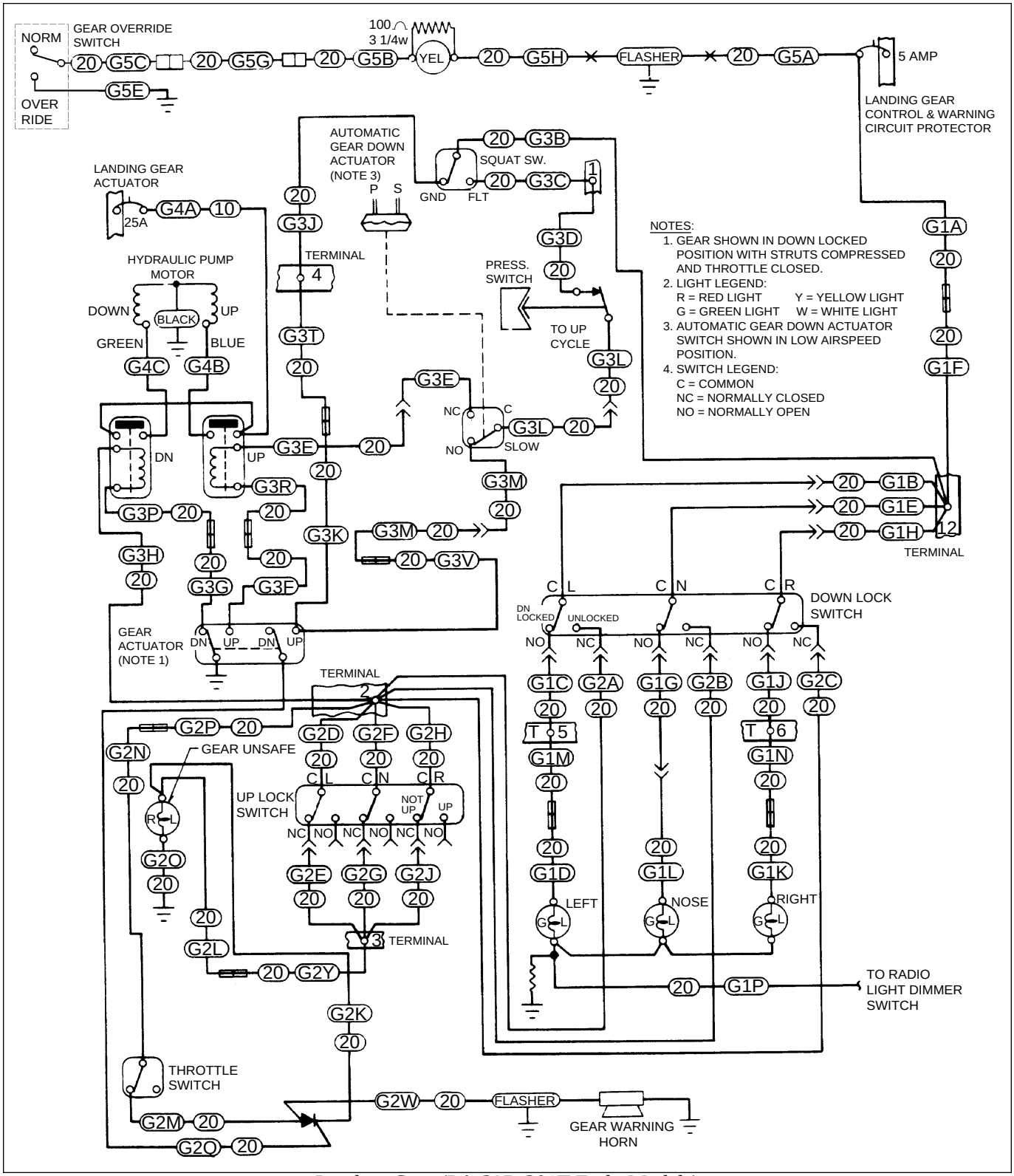

Landing Gear (PA-32R-301T Early Models)
Figure 91-19 (Sheet 6 of 7)

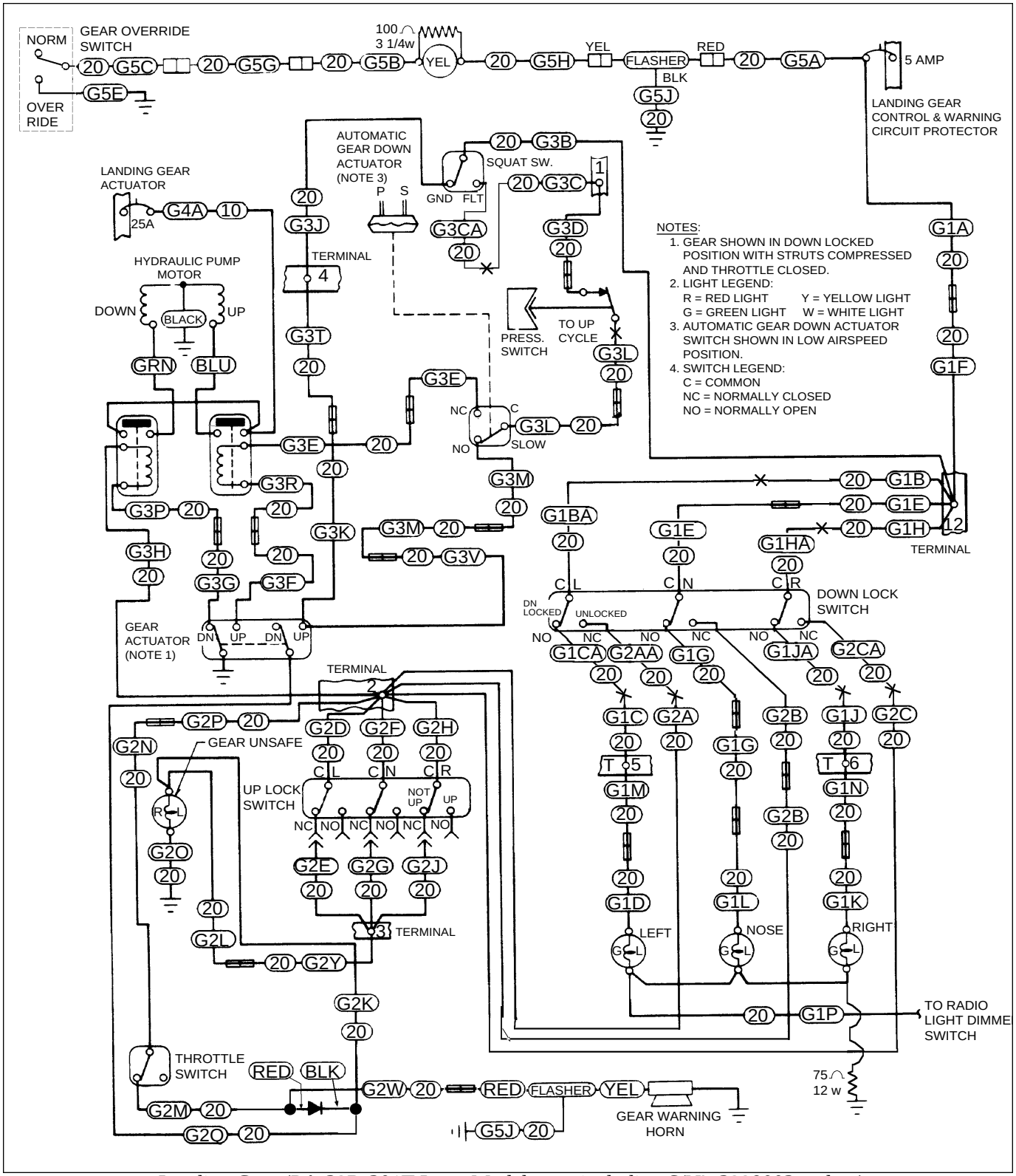

Landing Gear (PA-32R-301T Later Models, not including S/N's 3229003 and up)
Figure 91-19 (Sheet 7 of 7)

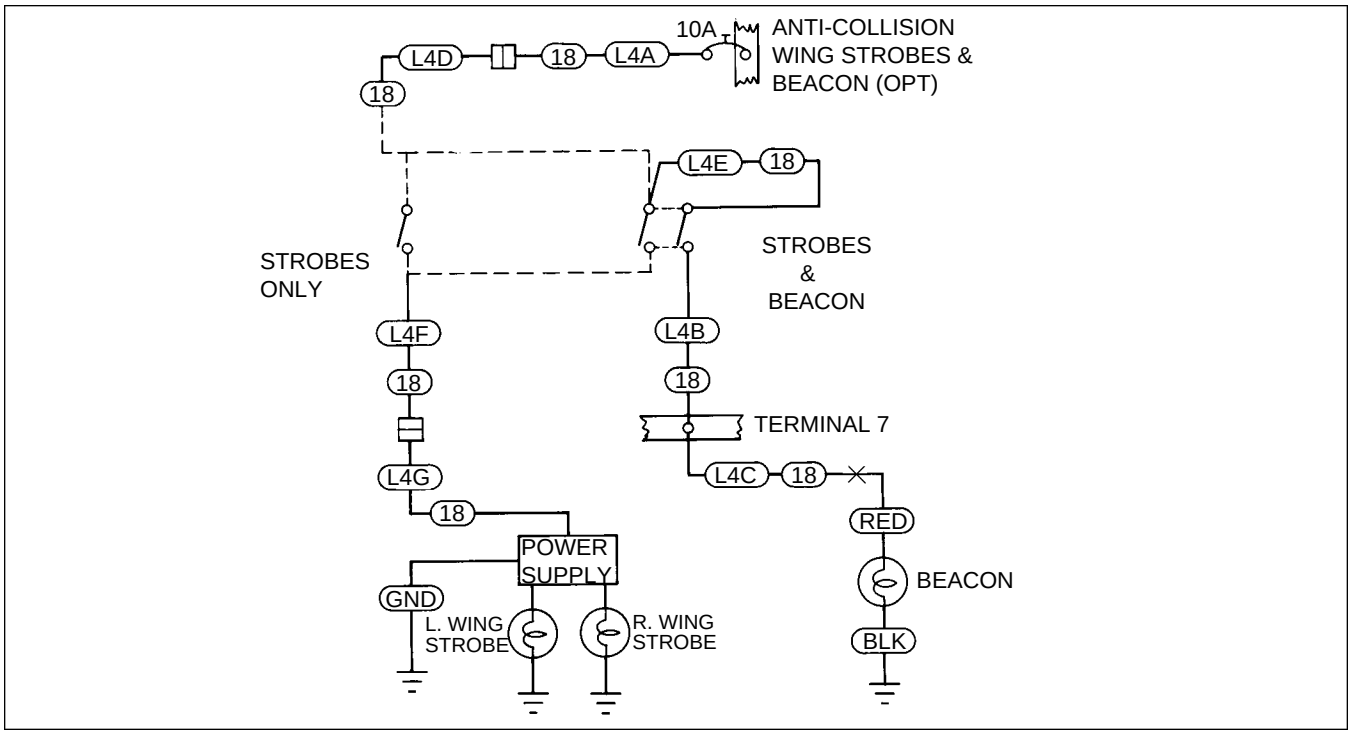

Anti-Collision - Wing Strobes, Beacon, Option (PA-32R-301 S/N's 32R-8013001 and up, 3213001 thru 3213028, 3213030 thru 3213041 and PA-32R-301T)

Figure 91-20

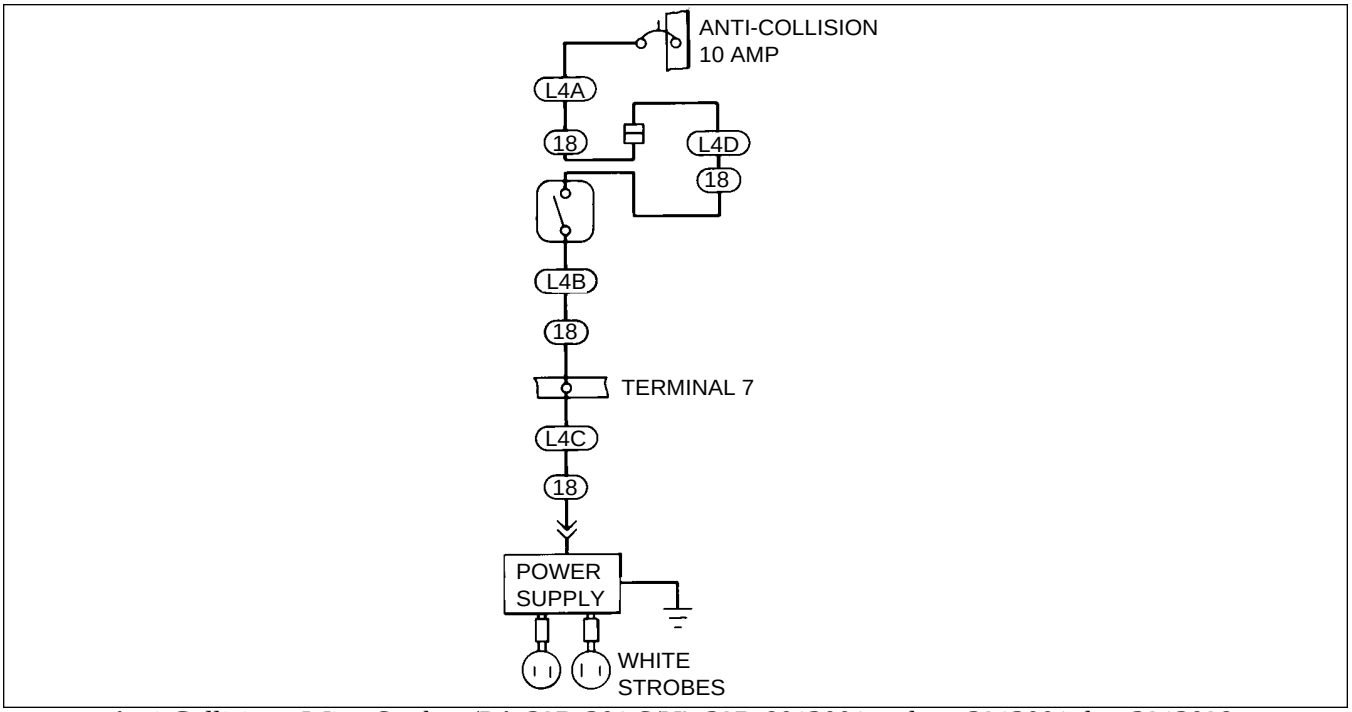

Anti-Collision - Wing Strobes (PA-32R-301 S/N's 32R-8013001 and up, 3213001 thru 3213028, 3213030 thru 3213041 and PA-32R-301T)

Figure 91-20A

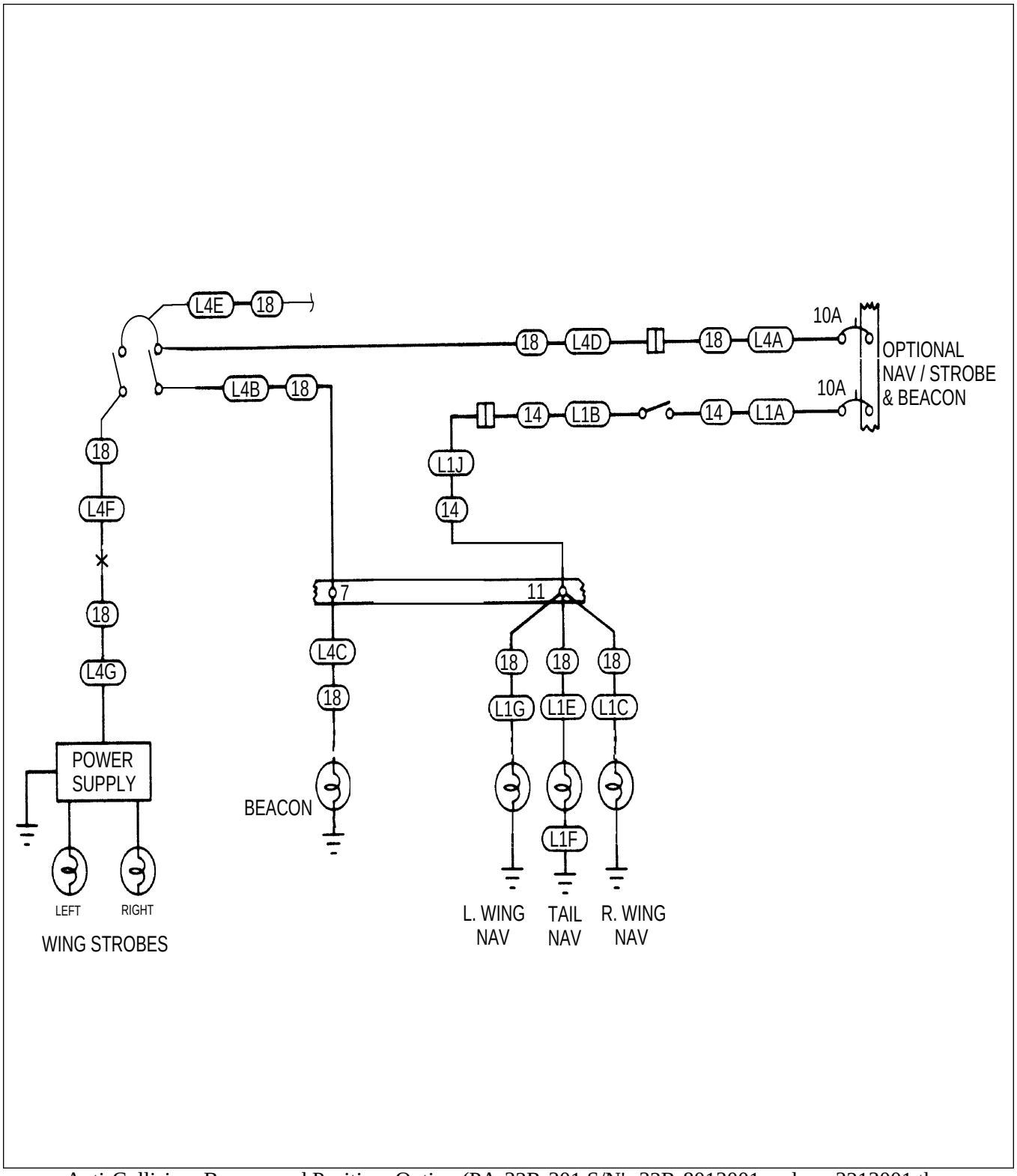

Anti-Collision, Beacon and Position, Option (PA-32R-301 S/N's 32R-8013001 and up, 3213001 thru 3213028, 3213030 thru 3213041 and PA-32R-301T)

Figure 91-20B

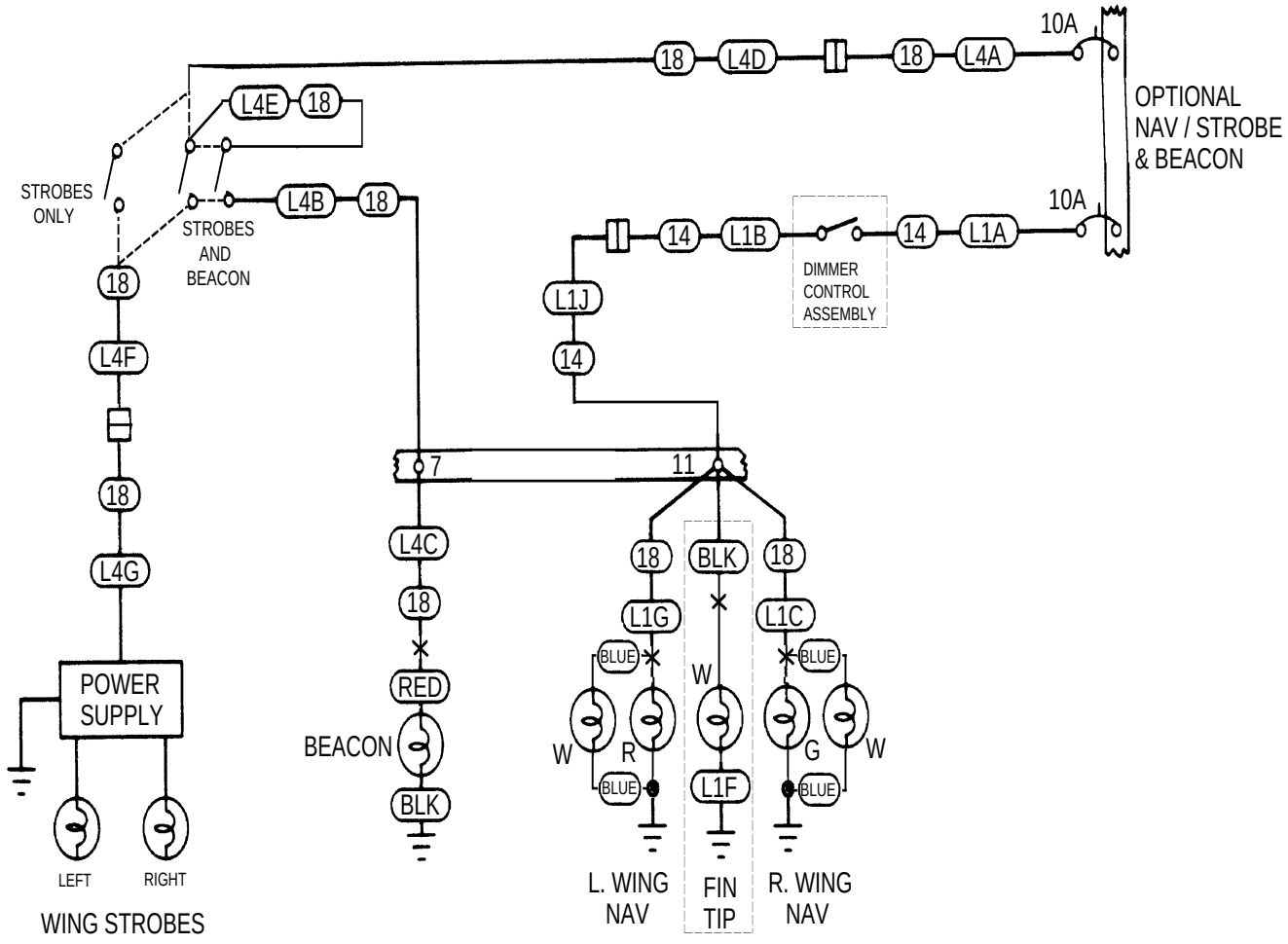

Anti-Collision, Beacon and Position, Option (PA-32R-301 S/N's 32R-8013001 and up, 3213001 thru 3213028, 3213030 thru 3213041 and PA-32R-301T)

Figure 91-20C

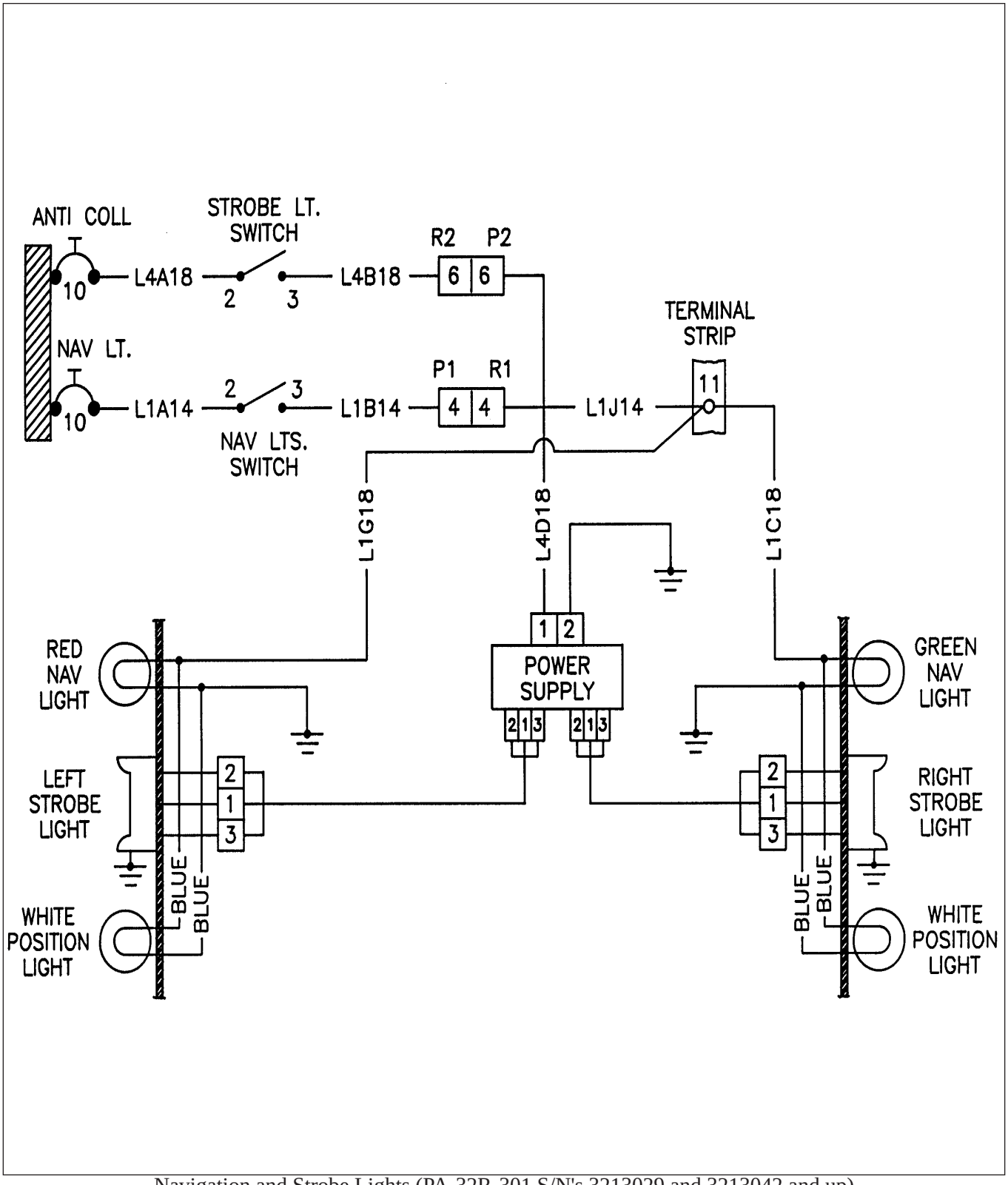

Navigation and Strobe Lights (PA-32R-301 S/N's 3213029 and 3213042 and up)
Figure 91-20D

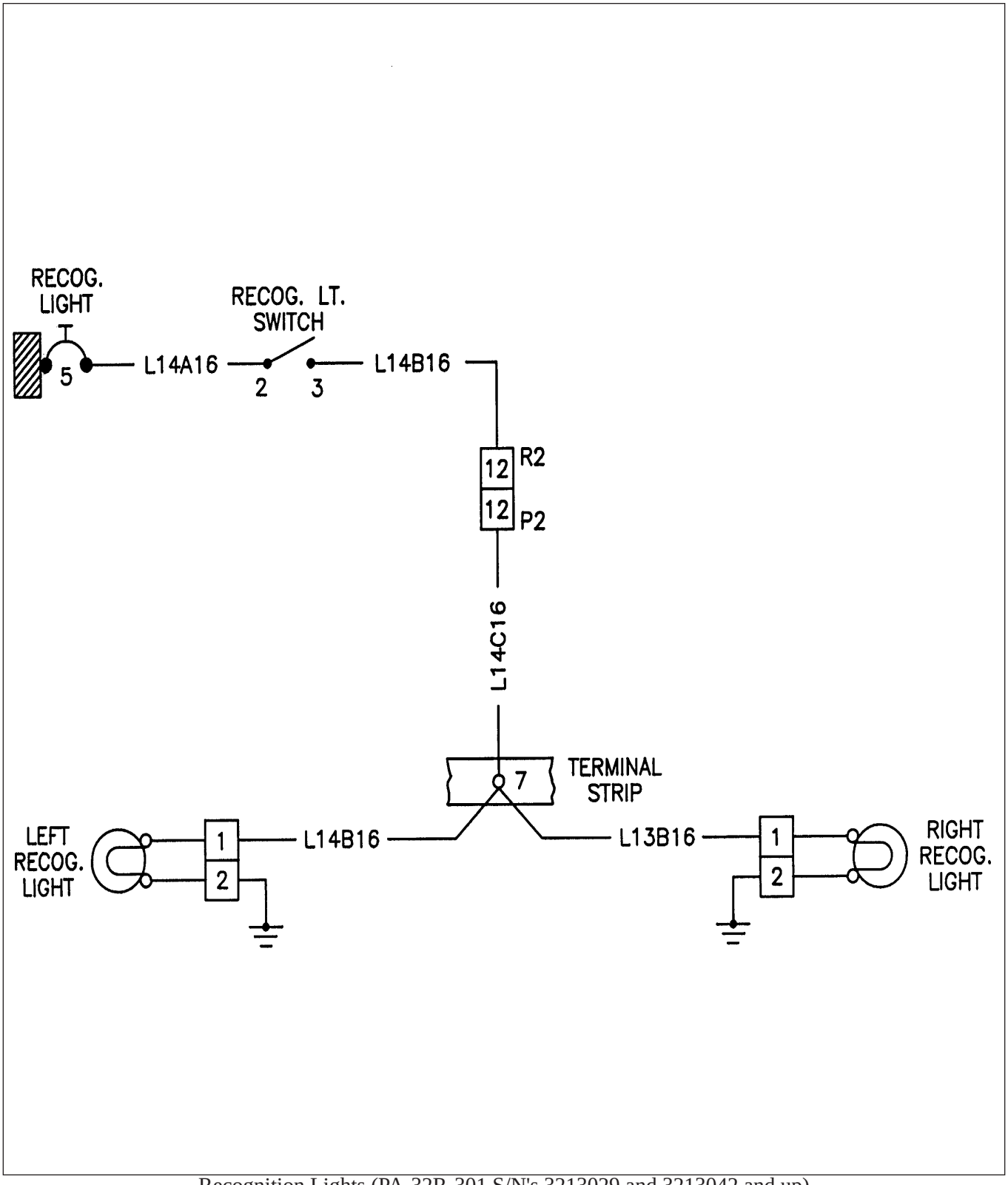

Recognition Lights (PA-32R-301 S/N's 3213029 and 3213042 and up)
Figure 91-20E

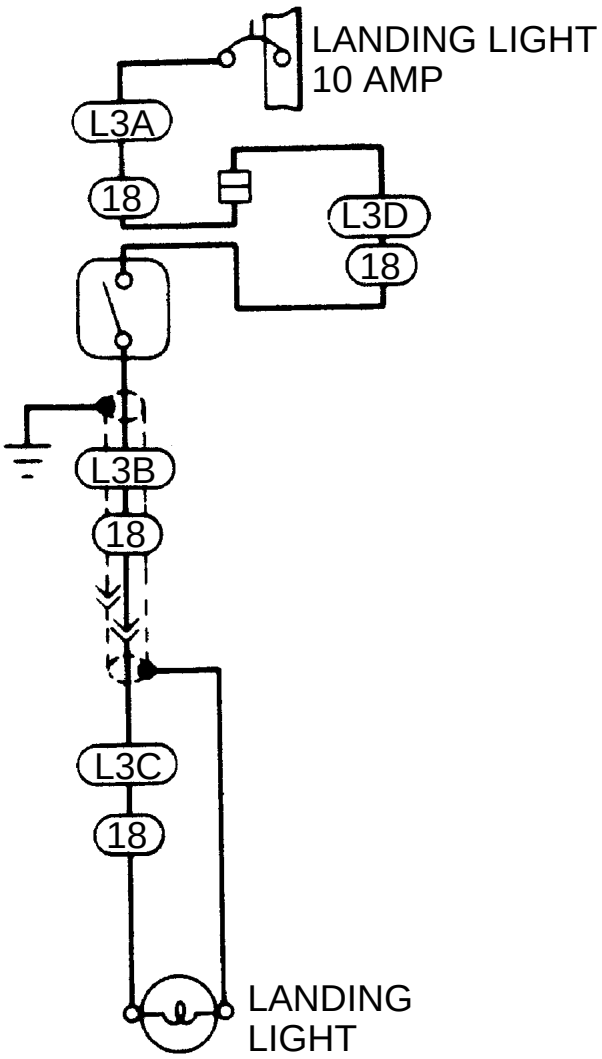

Landing Light (PA-32R-301 S/N's 32R-8013001 and up, 3213001 thru 3213028, 3213030 thru 3213041 and PA-32R-301T)

Figure 91-21 (Sheet 1 of 2)

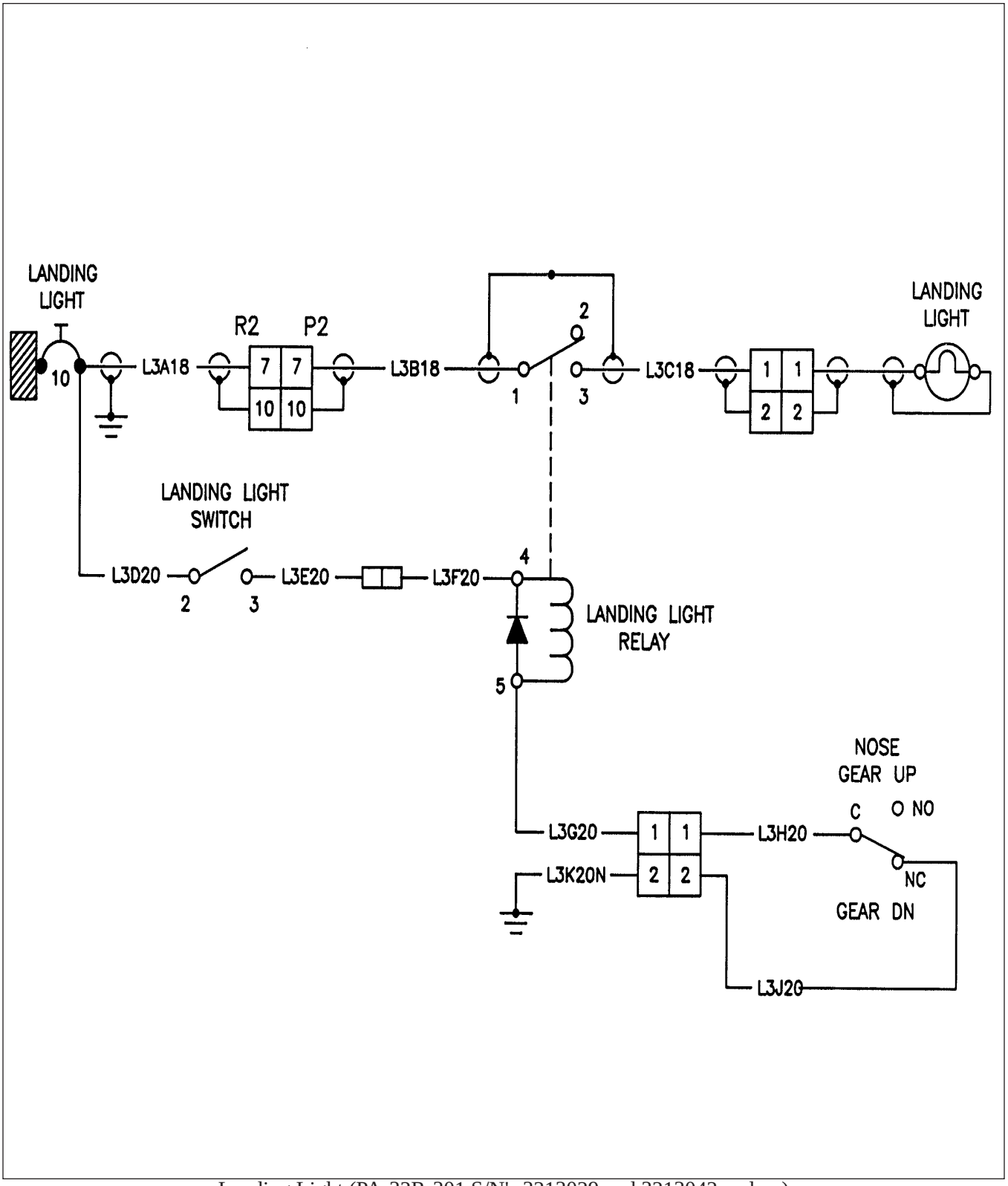

Landing Light (PA-32R-301 S/N's 3213029 and 3213042 and up)
Figure 91-21 (Sheet 2 of 2)

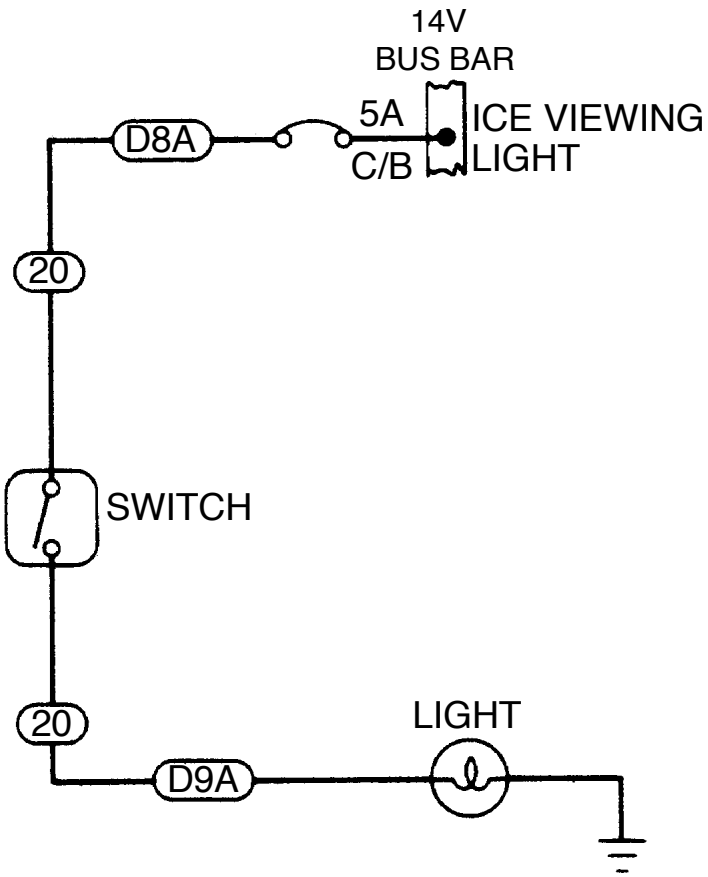

Wing Inspection Light (PA-32R-301/301T)
Figure 91-22

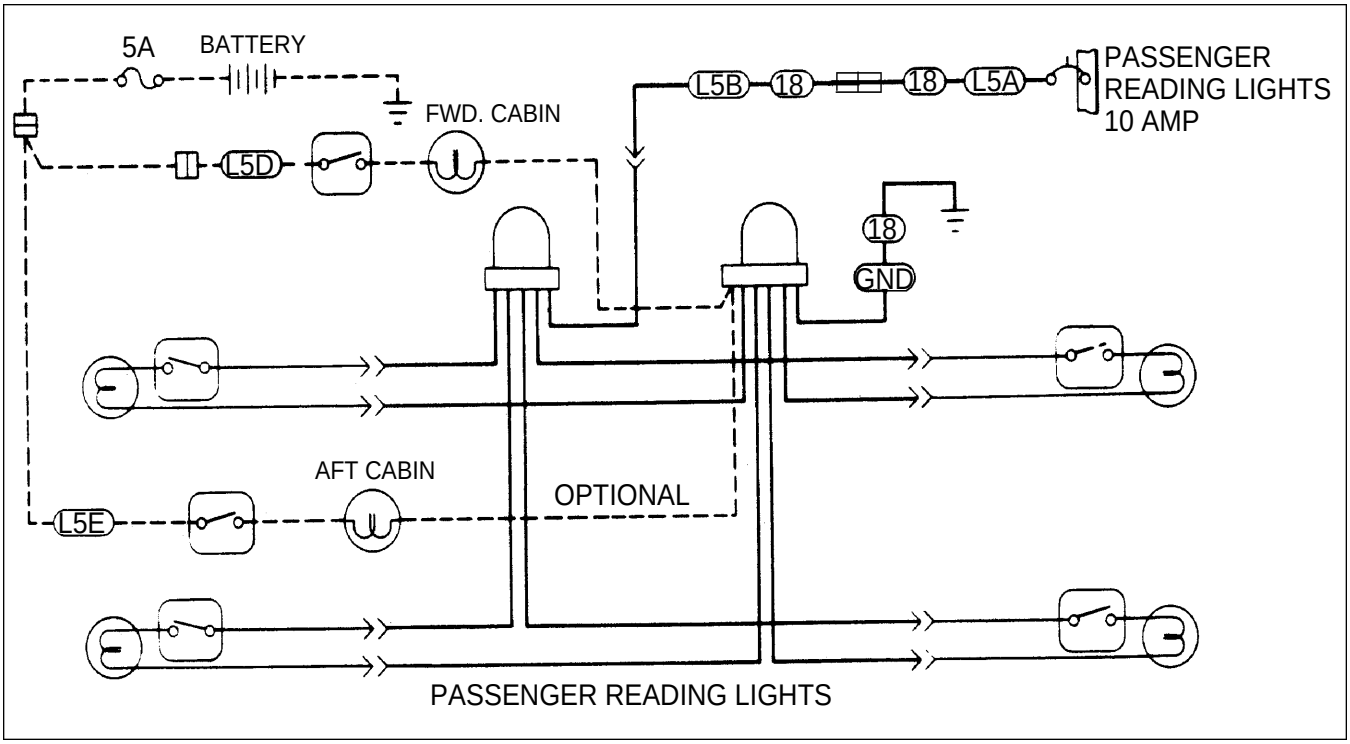

Reading Lights (PA-32R-301/301T Early Models)
Figure 91-23

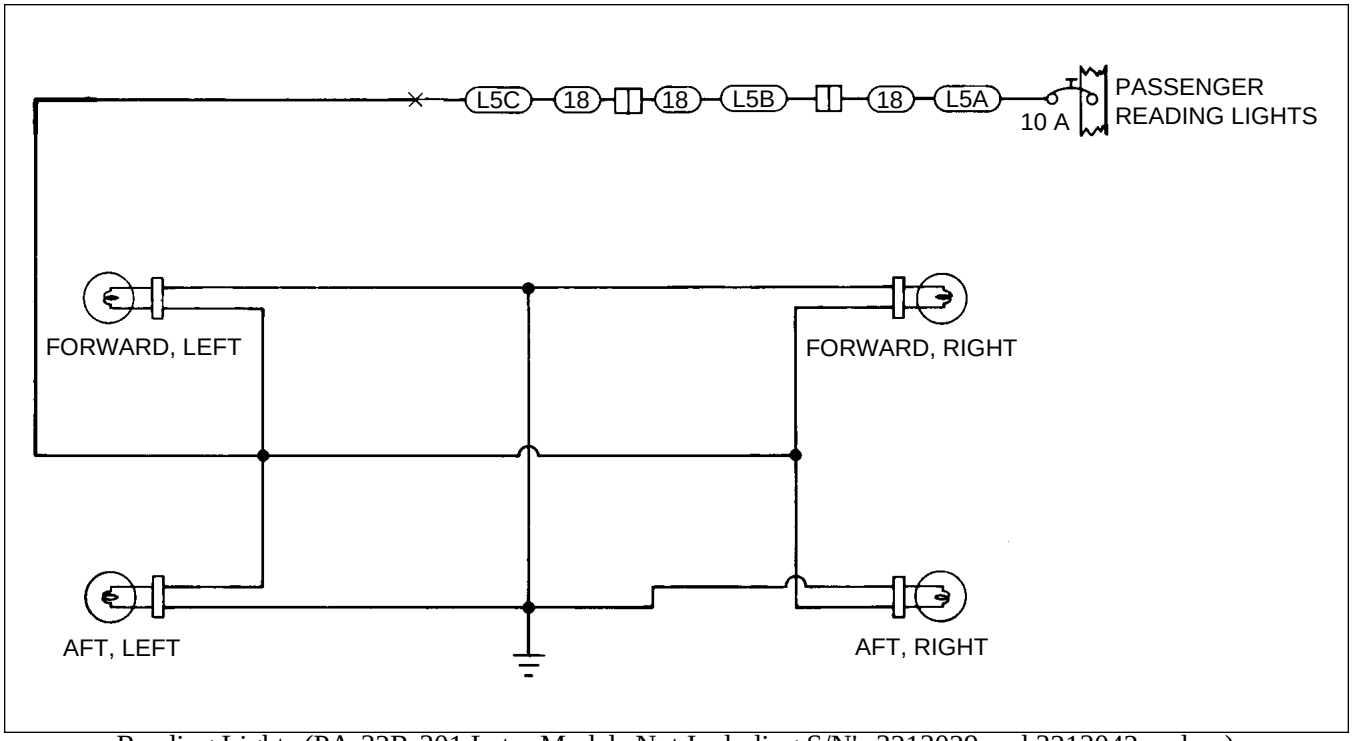

Reading Lights (PA-32R-301 Later Models Not Including S/N's 3213029 and 3213042 and up)
(PA-32R-301T Later Models)
Figure 91-23A

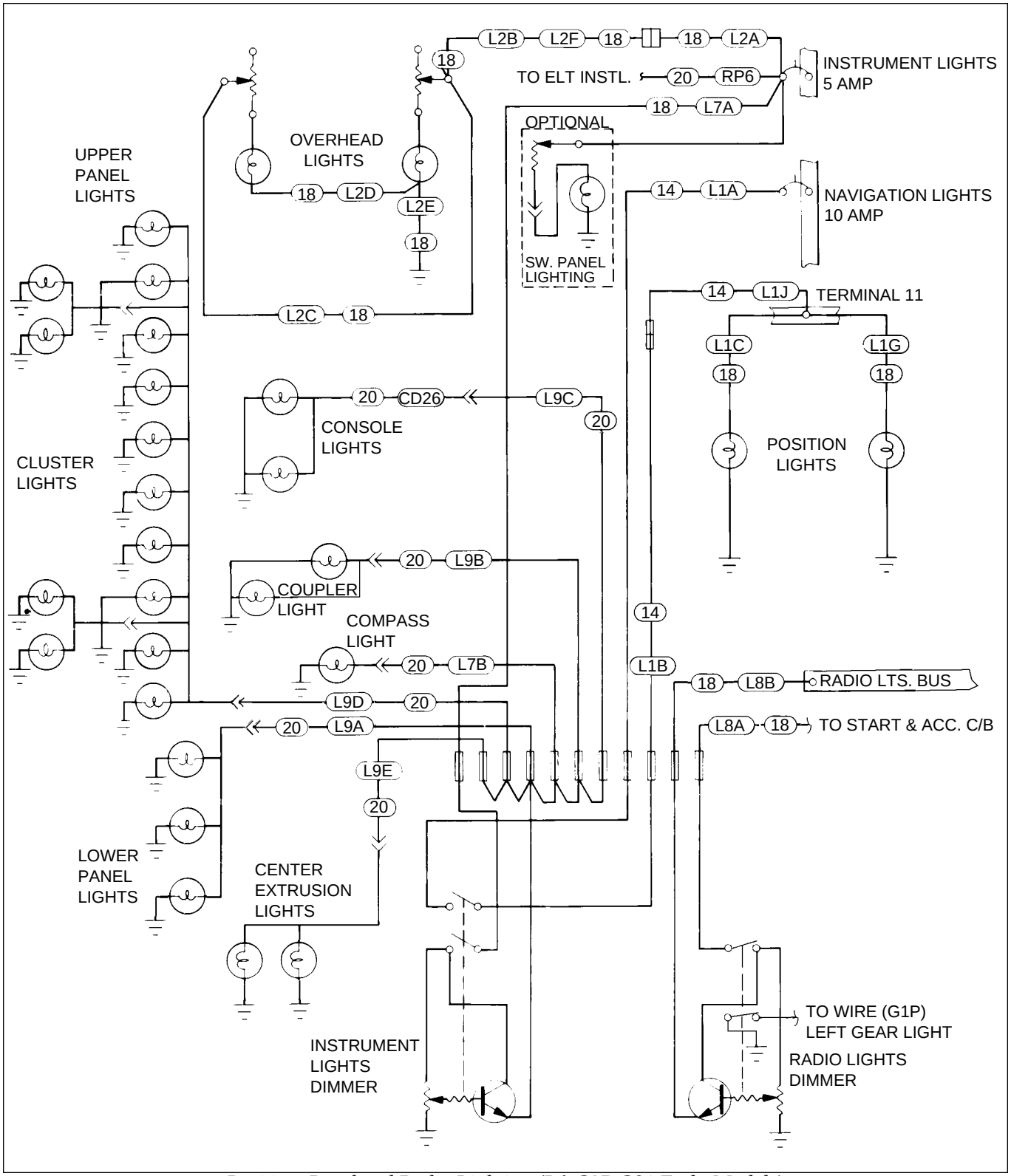

Position, Panel and Radio Lighting (PA-32R-301 Early Models)
Figure 91-24 (Sheet 1 of 3)

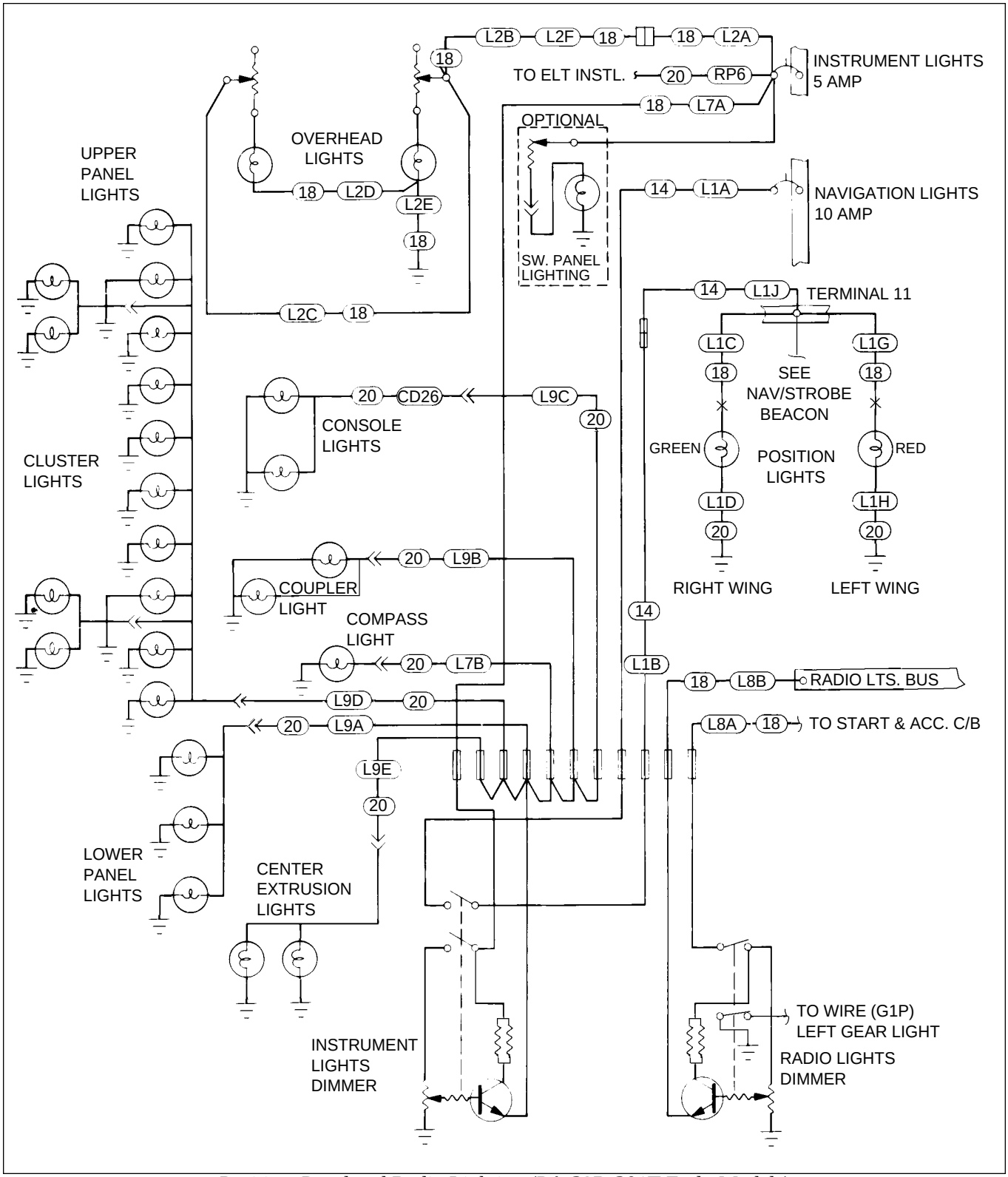

Position, Panel and Radio Lighting (PA-32R-301T Early Models)
Figure 91-24 (Sheet 2 of 3)

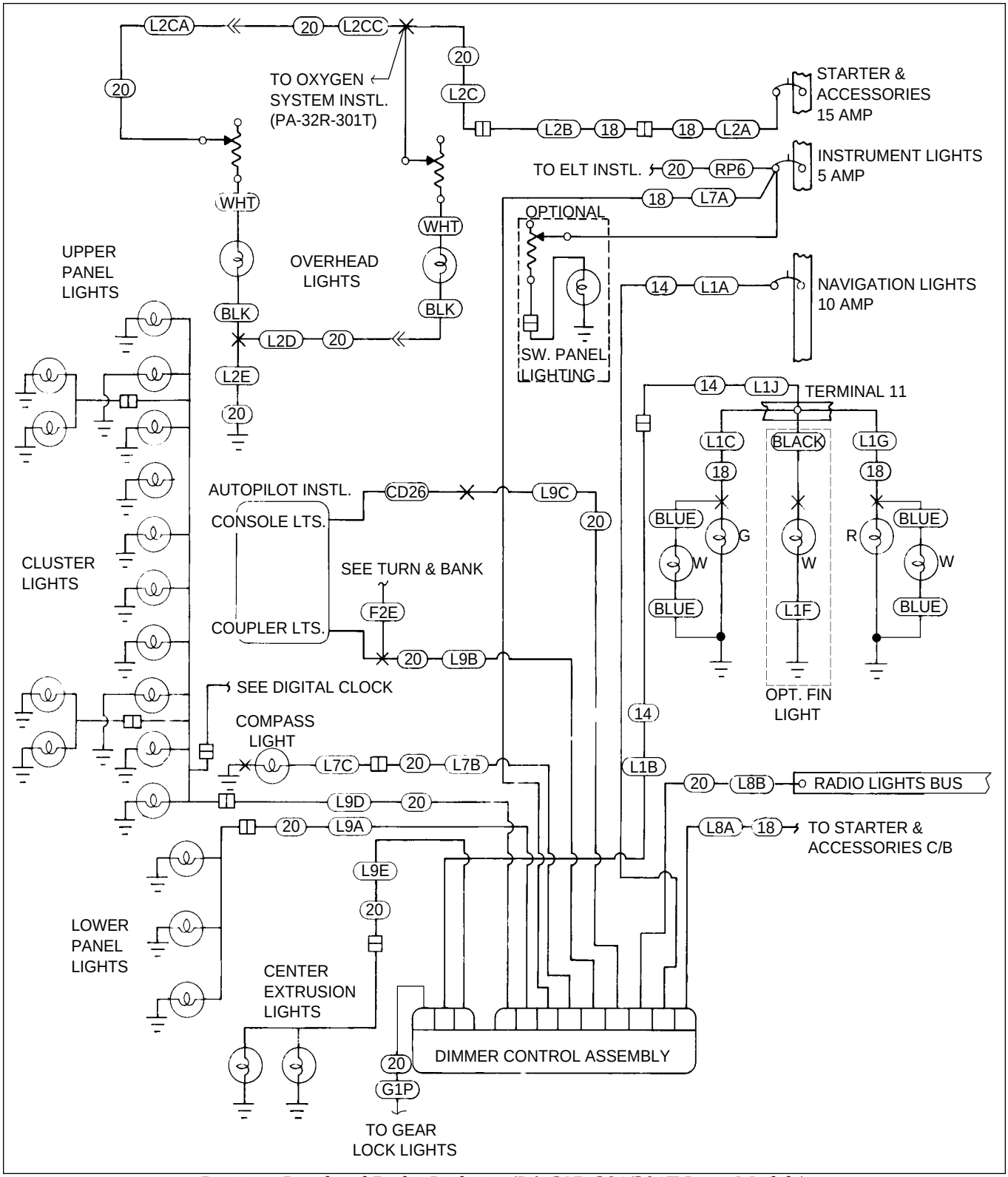

Position, Panel and Radio Lighting (PA-32R-301/301T Later Models)
Figure 91-24 (Sheet 3 of 3)

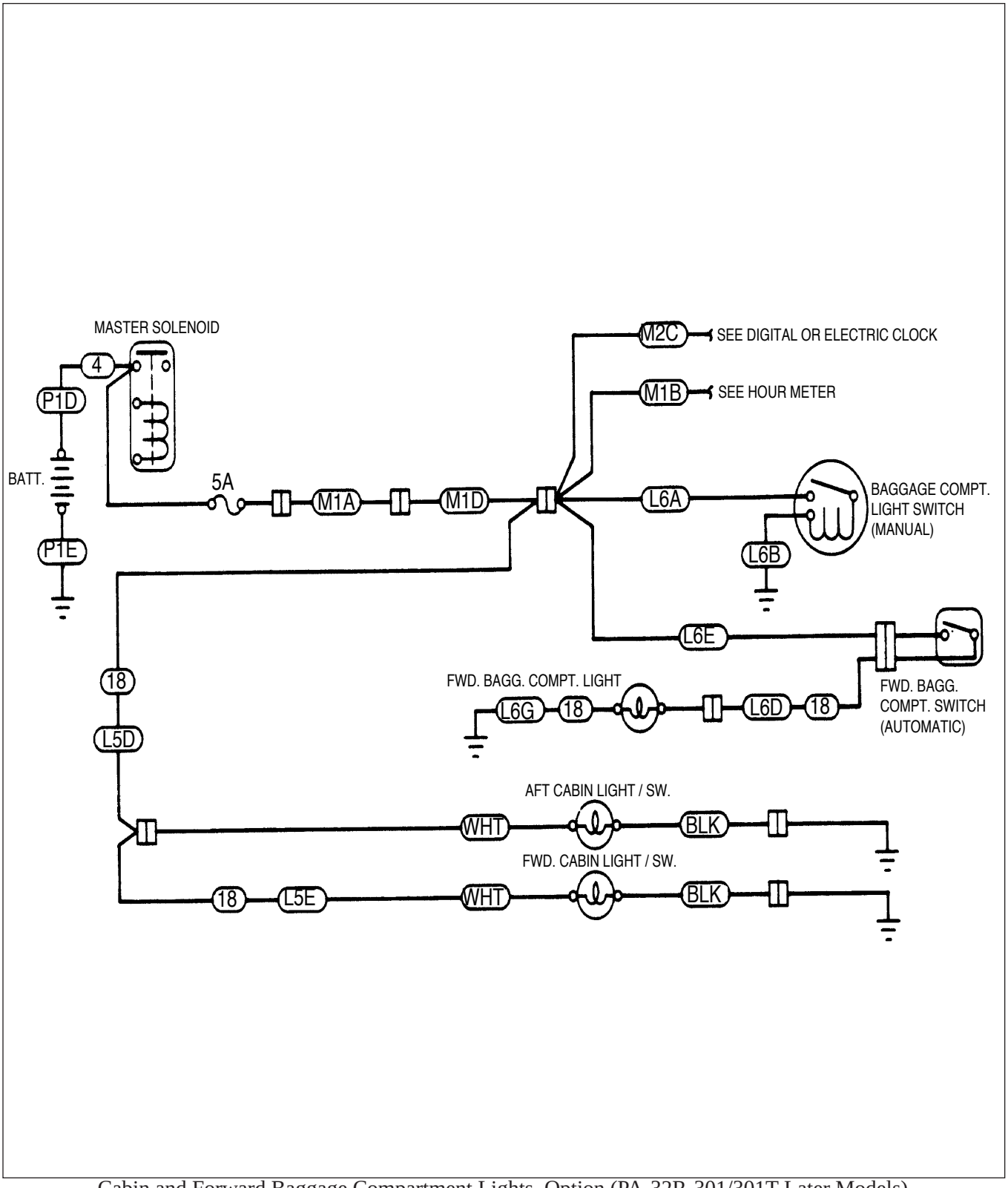

Cabin and Forward Baggage Compartment Lights, Option (PA-32R-301/301T Later Models)
Figure 91-25

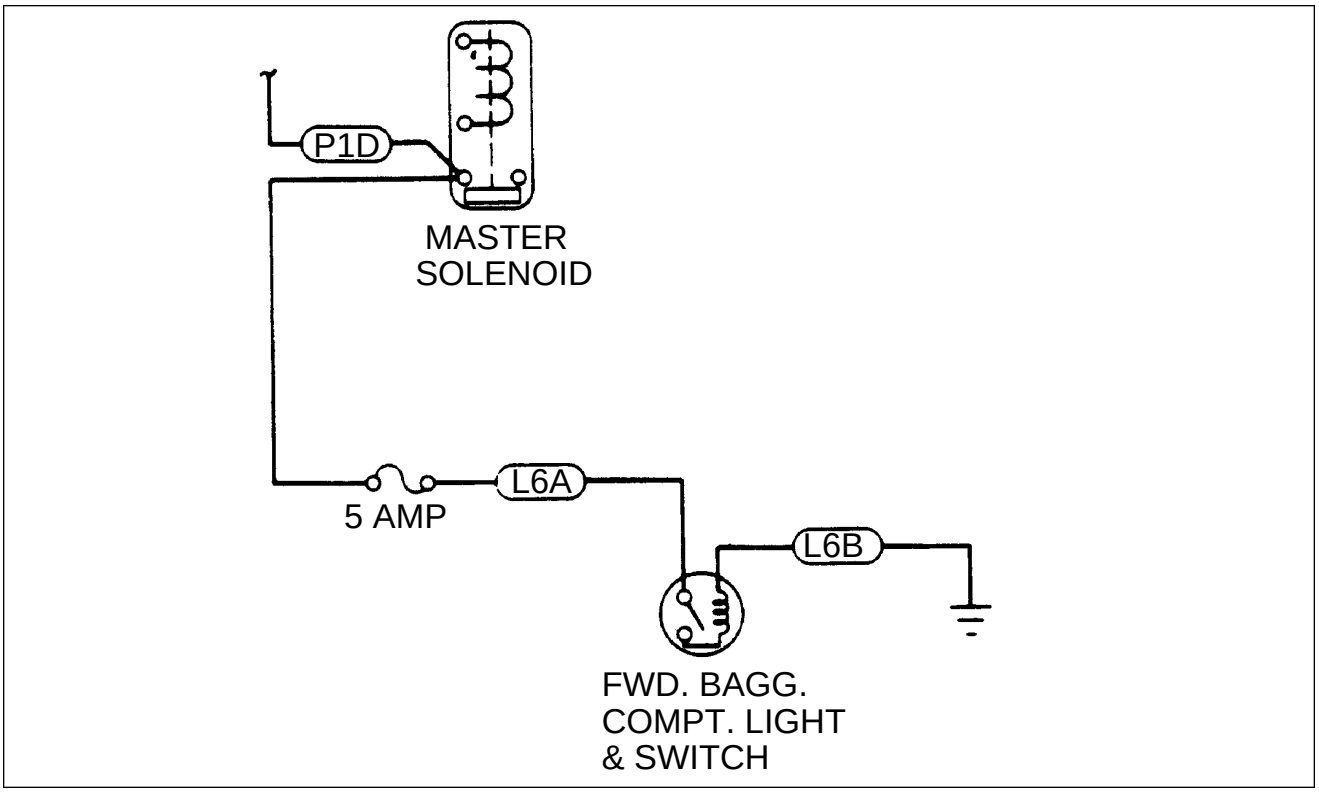

Baggage Light - Forward (PA-32R-301/301T)
Figure 91-26

THIS SPACE INTENTIONALLY LEFT BLANK

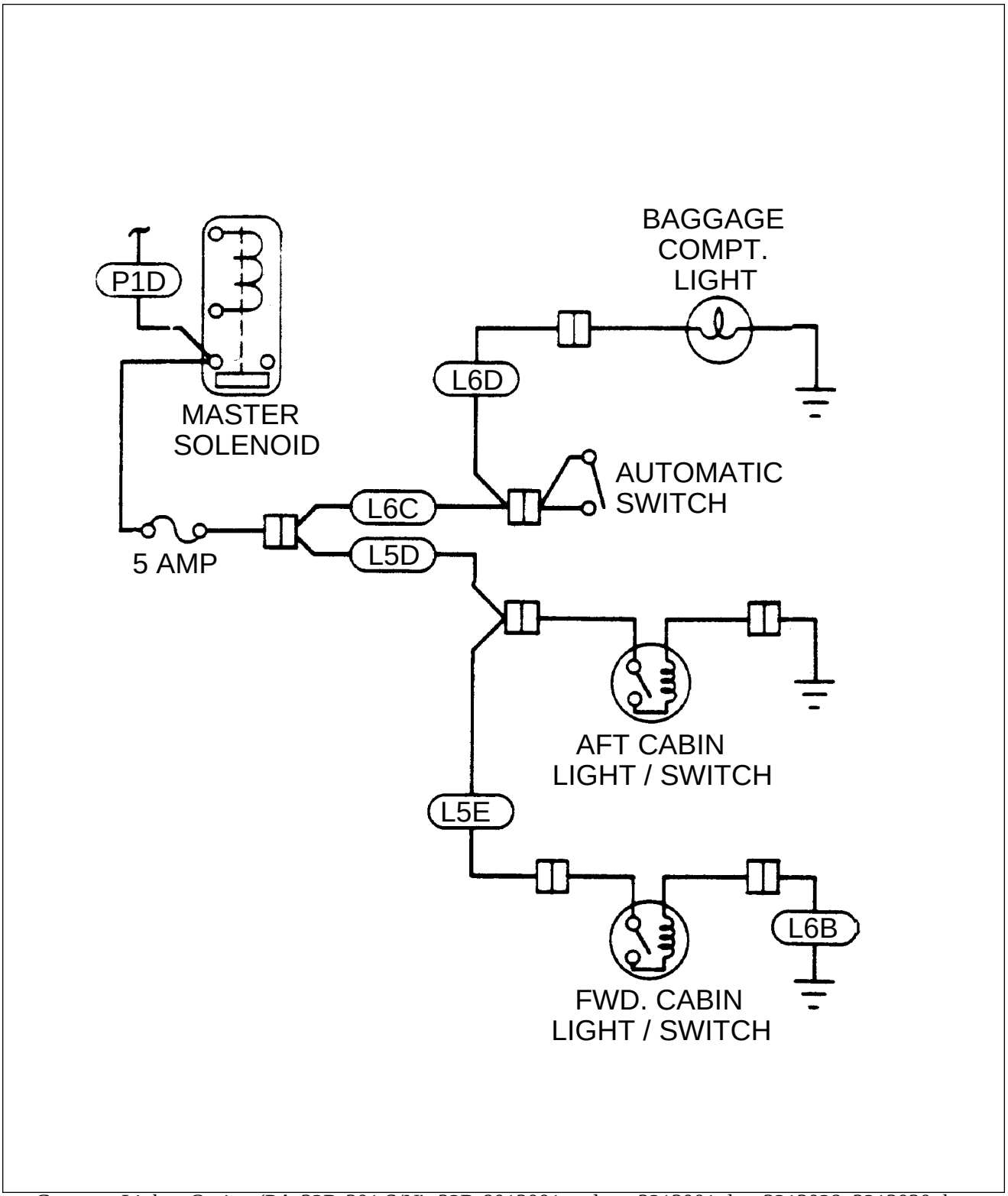

Courtesy Lights, Option (PA-32R-301 S/N's 32R-8013001 and up, 3213001 thru 3213028, 3213030 thru 3213041 and PA-32R-301T)

Figure 91-27 (Sheet 1 of 2)

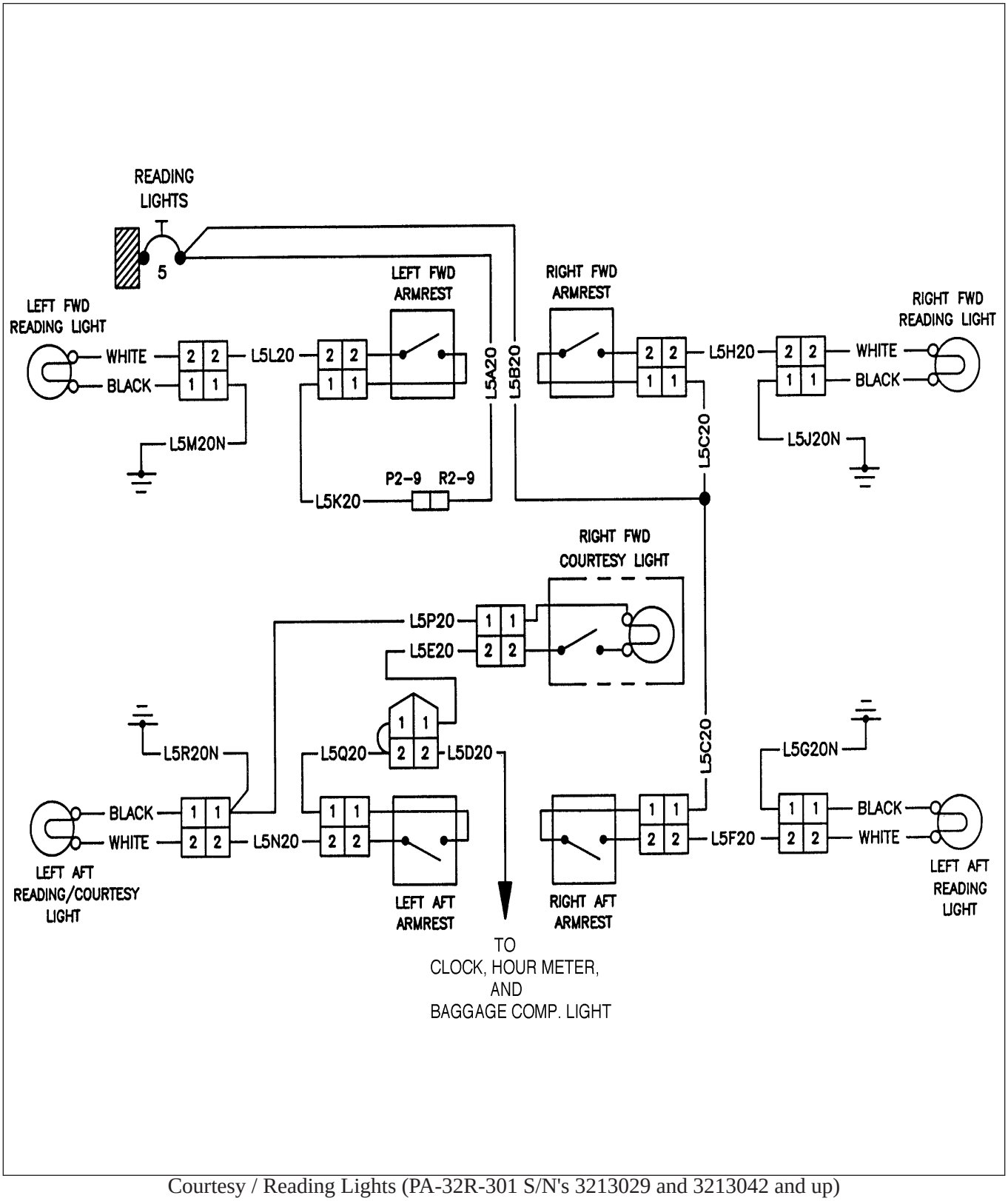

Courtesy / Reading Lights (PA-32R-301 S/N's 3213029 and 3213042 and up)
Figure 91-27 (Sheet 2 of 2)

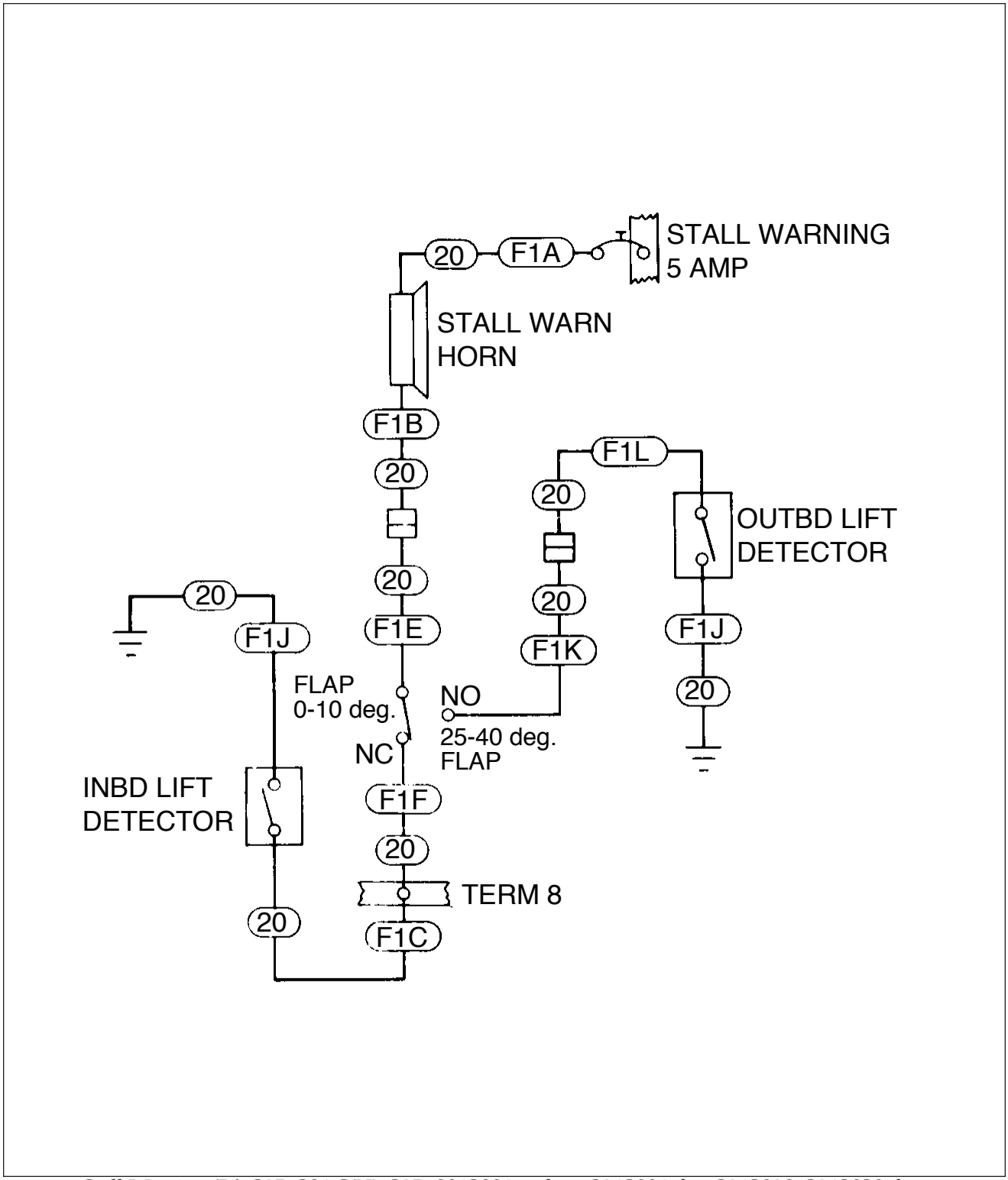

Stall Warning (PA-32R-301 S/N's 32R-8013001 and up, 3213001 thru 3213028, 3213030 thru 3213041 and PA-32R-301T)

Figure 91-28 (Sheet 1 of 2)

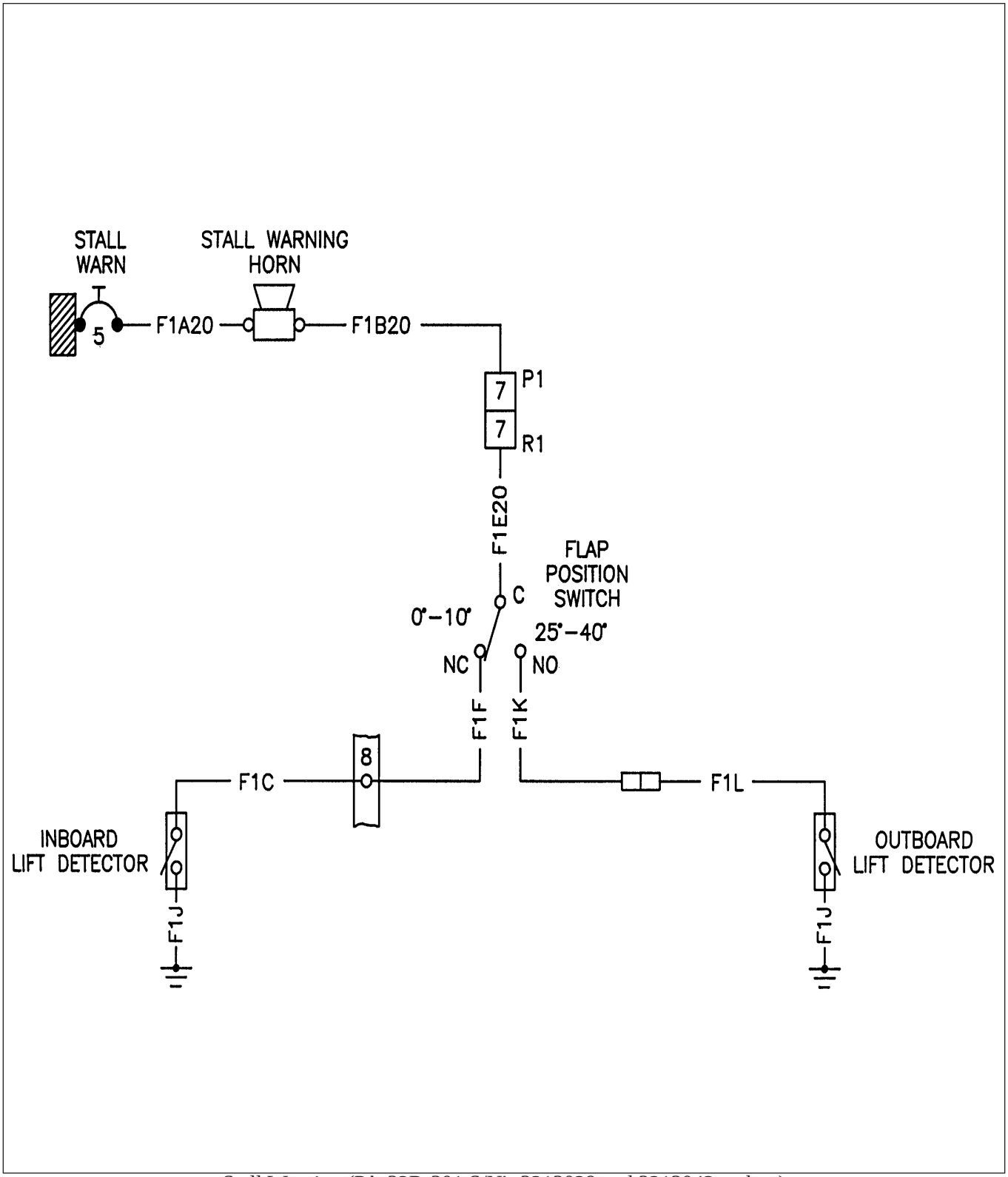

Stall Warning (PA-32R-301 S/N's 3213029 and 3213042 and up)
Figure 91-28 (Sheet 2 of 2)

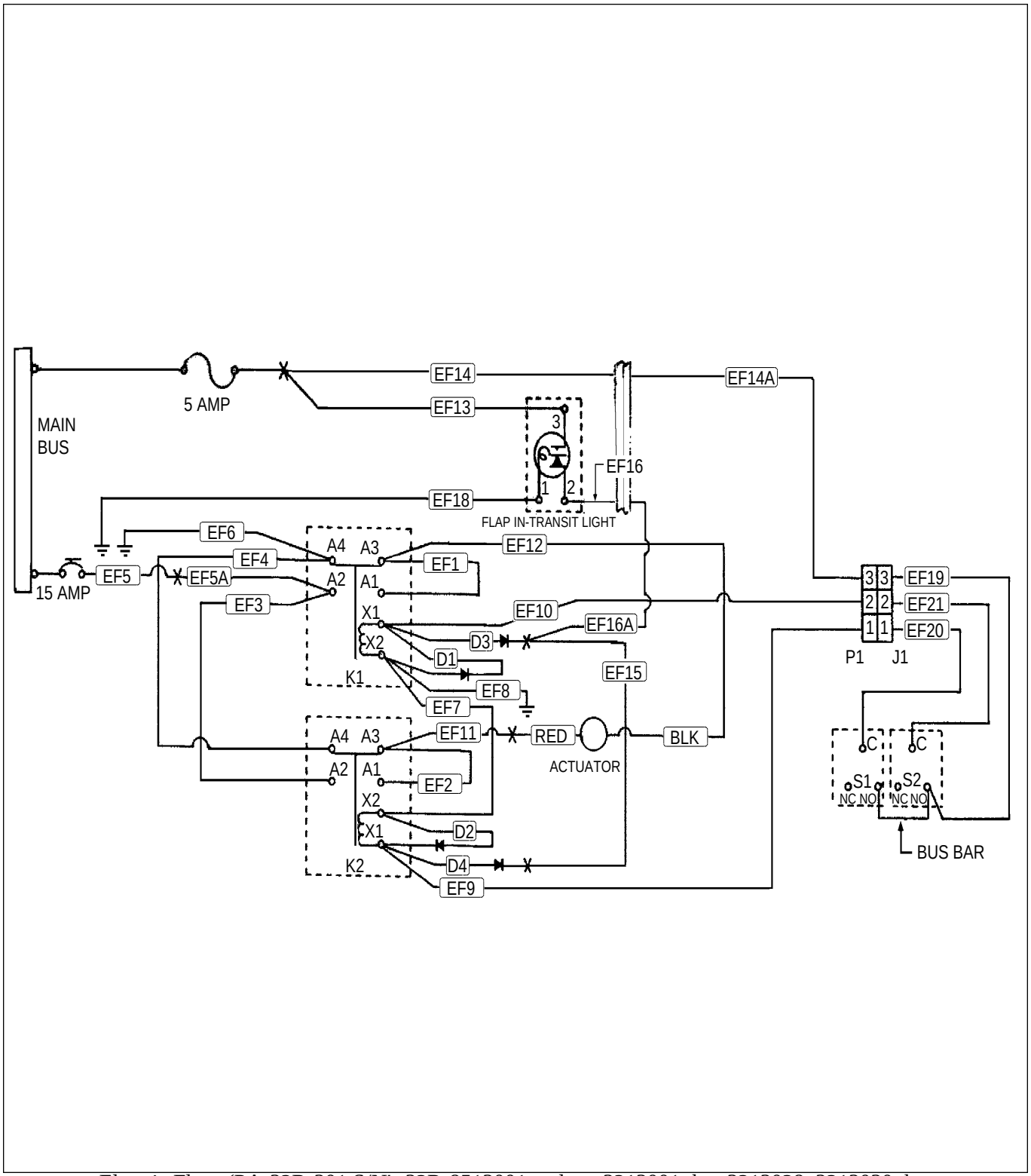

Electric Flaps (PA-32R-301 S/N's 32R-8513001 and up, 3213001 thru 3213028, 3213030 thru 3213041 and PA-32R-301T S/N's 32R-8529001 and up, 3229001 and up)
Figure 91-29 (Sheet 1 of 2)

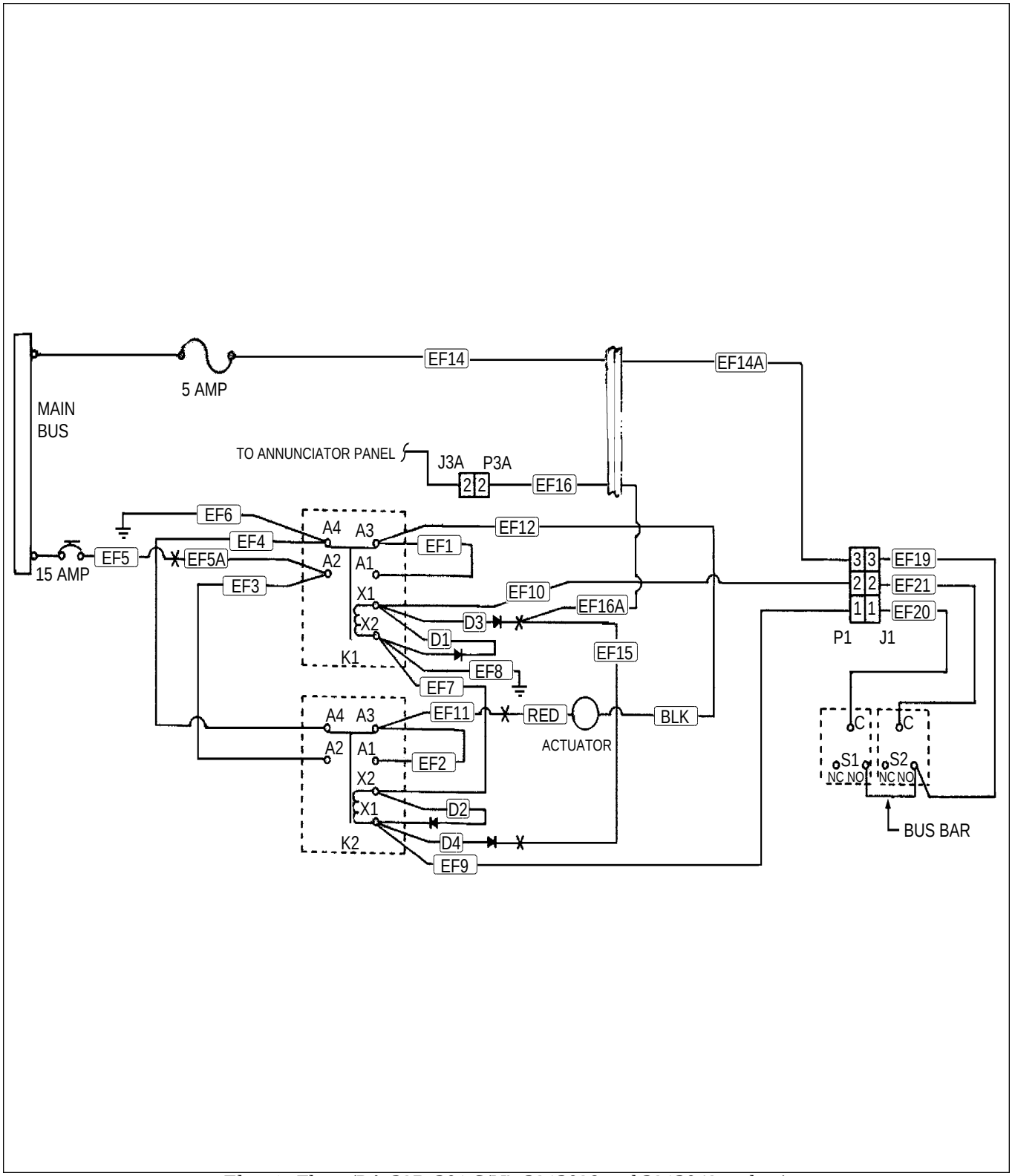

Electric Flaps (PA-32R-301 S/N's 3213029 and 3213042 and up)
Figure 91-29 (Sheet 2 of 2)

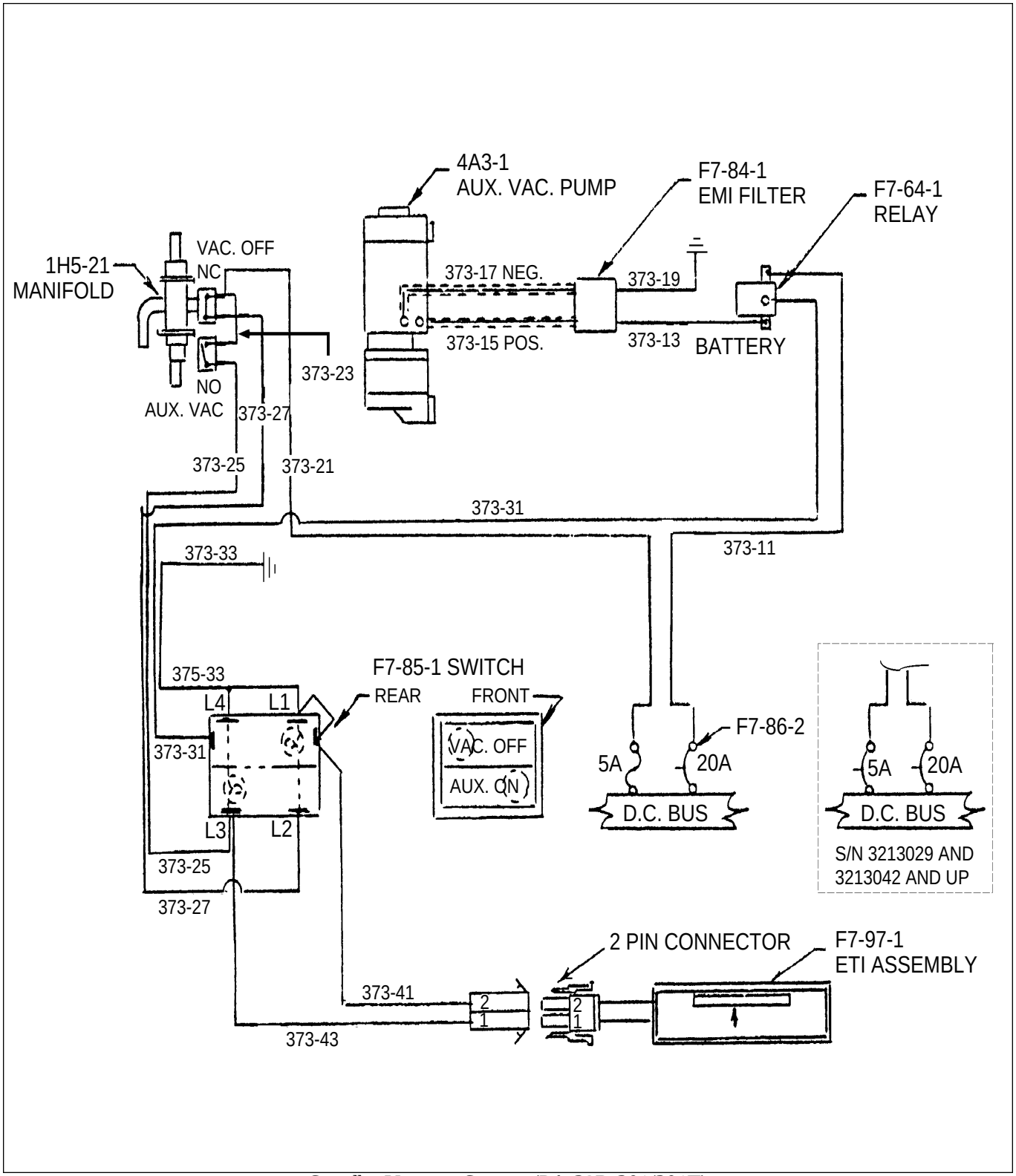

Standby Vacuum System (PA-32R-301/301T)
Figure 91-30

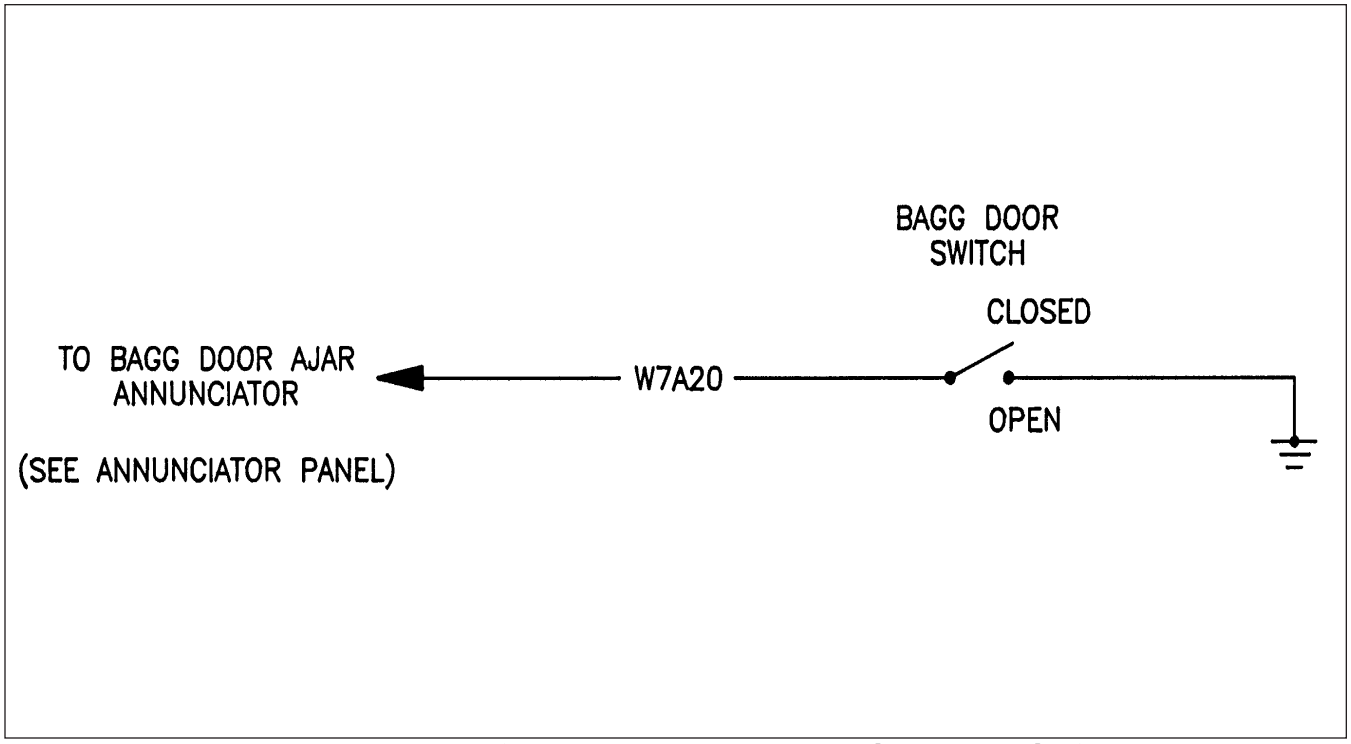

Baggage Door Ajar (PA-32R-301 S/N's 3213029 and 3213042 and up)
Figure 91-31

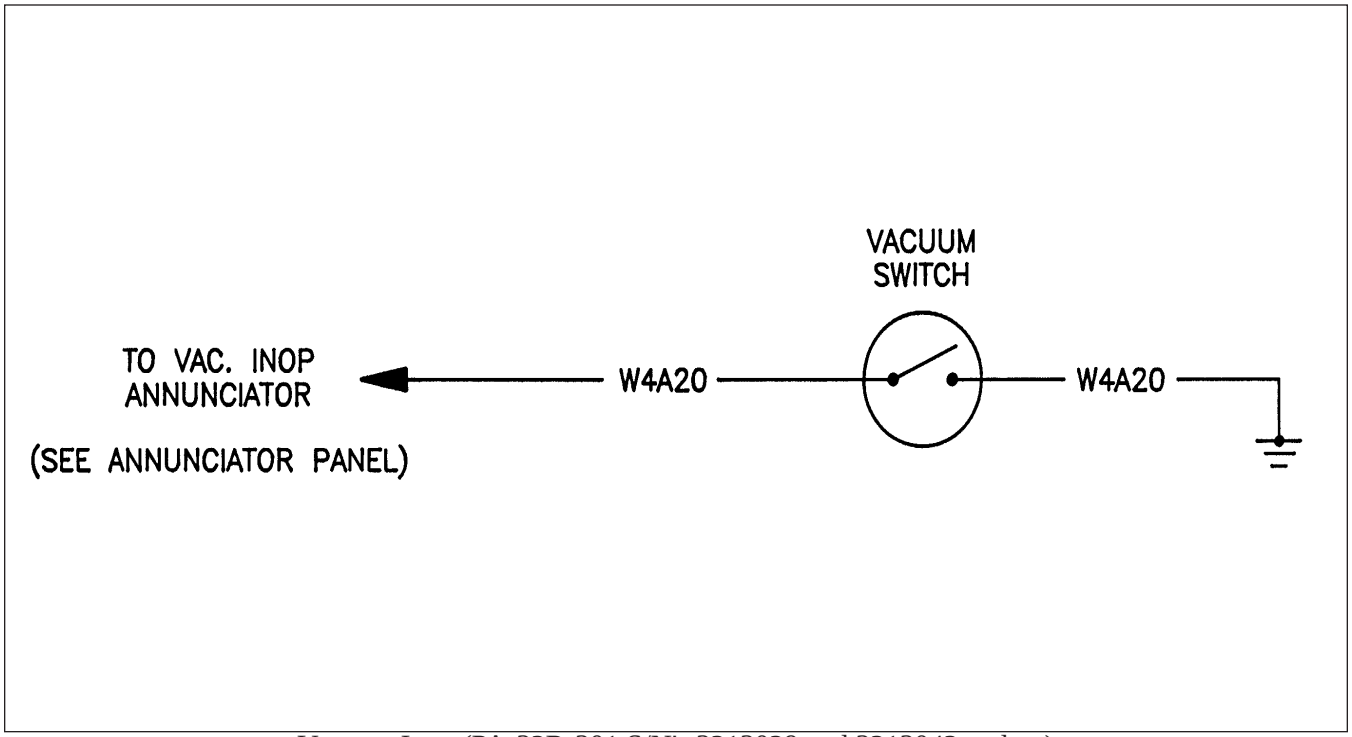

Vacuum Inop (PA-32R-301 S/N's 3213029 and 3213042 and up)
Figure 91-32

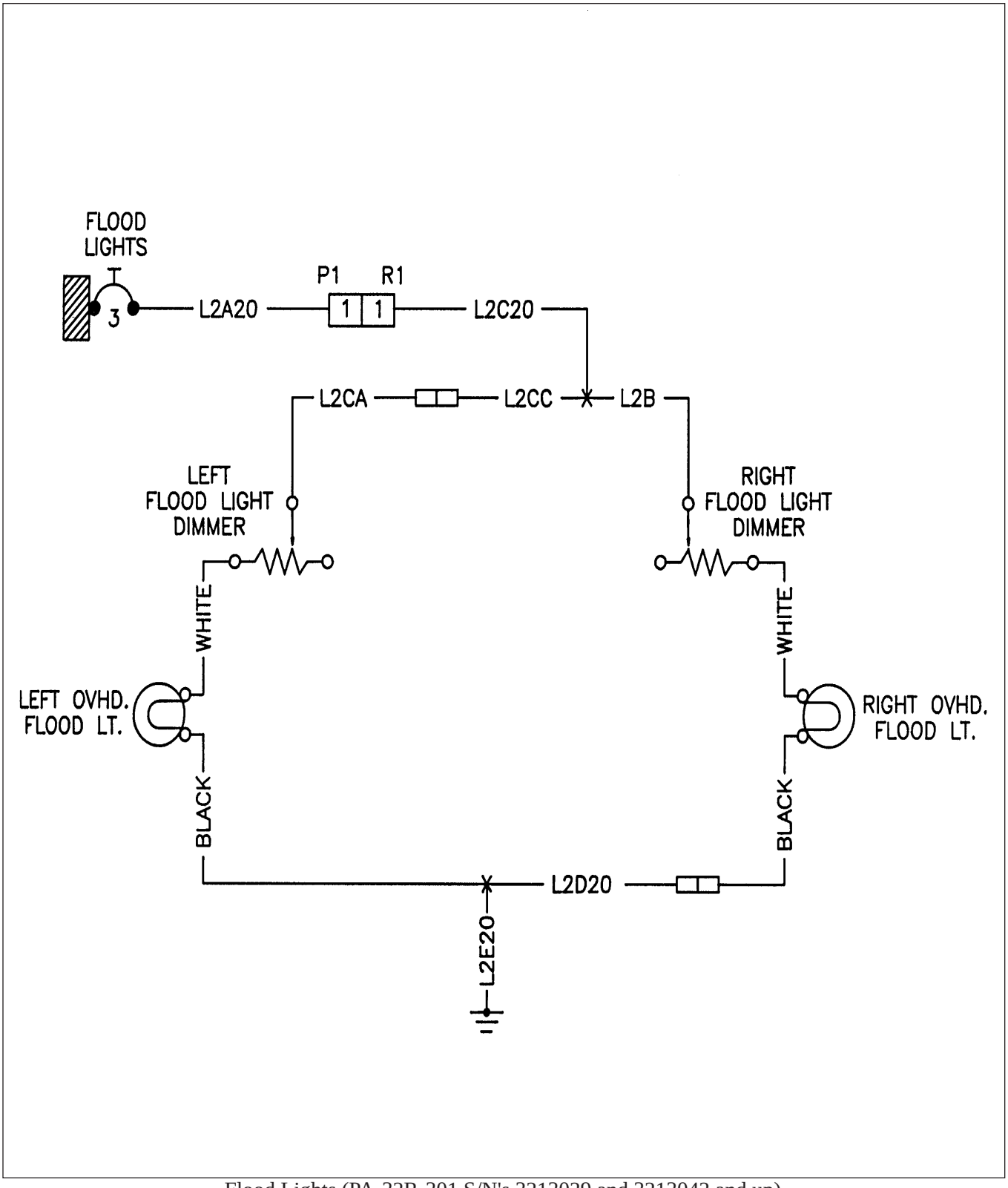

Flood Lights (PA-32R-301 S/N's 3213029 and 3213042 and up)
Figure 91-33

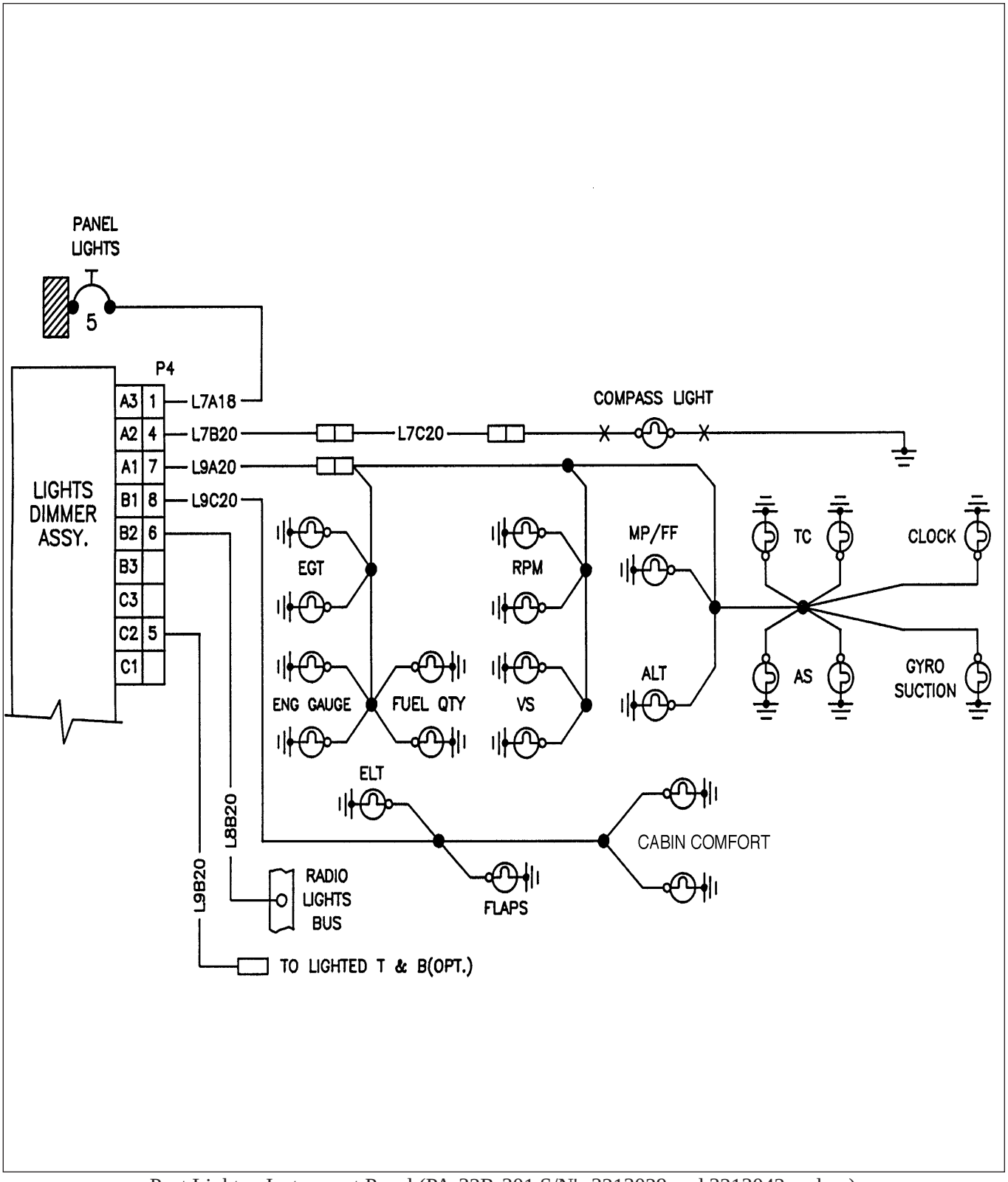

Post Lights - Instrument Panel (PA-32R-301 S/N's 3213029 and 3213042 and up)
Figure 91-34

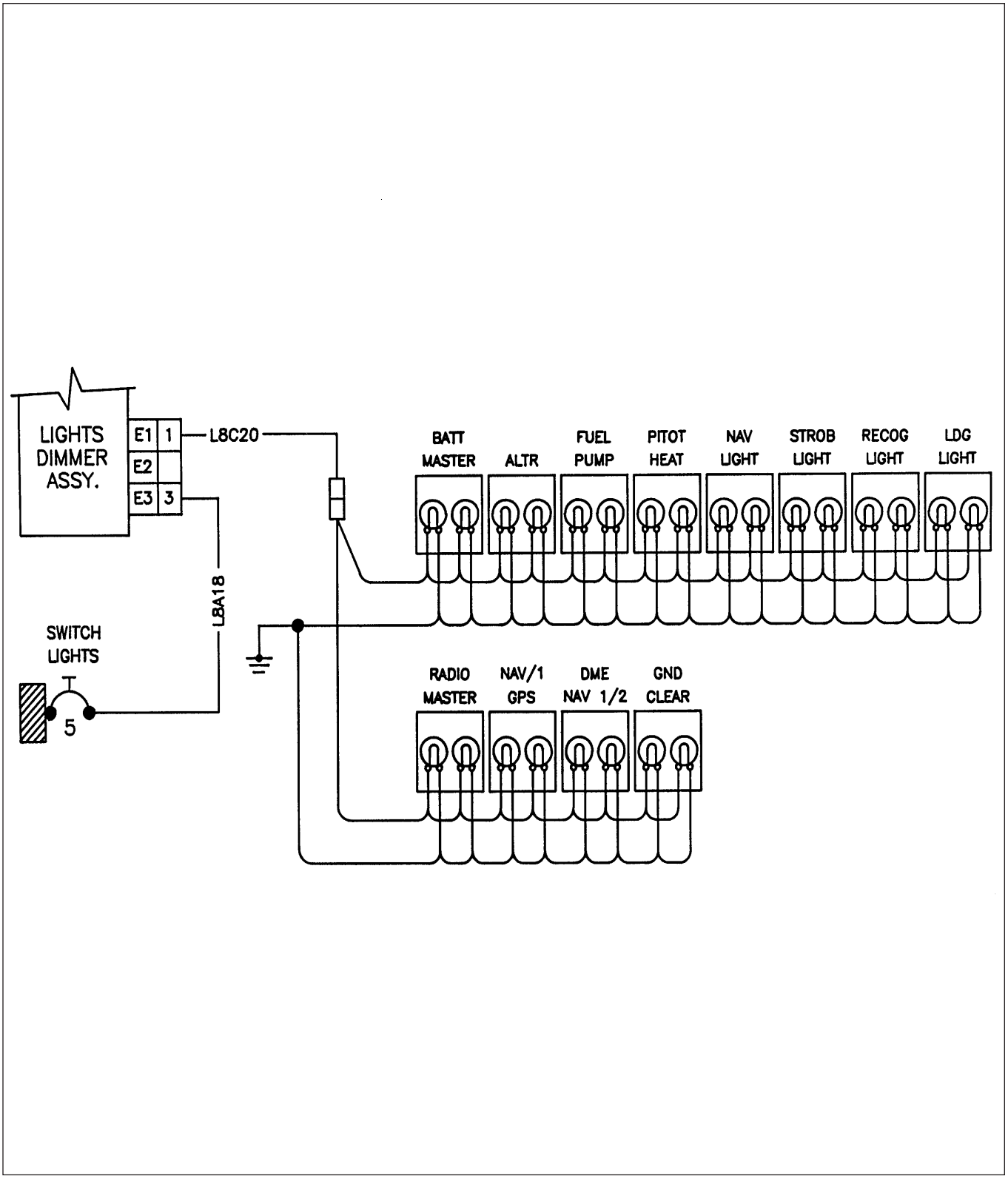

Switch Lights (PA-32R-301 S/N's 3213029 and 3213042 and up)
Figure 91-35

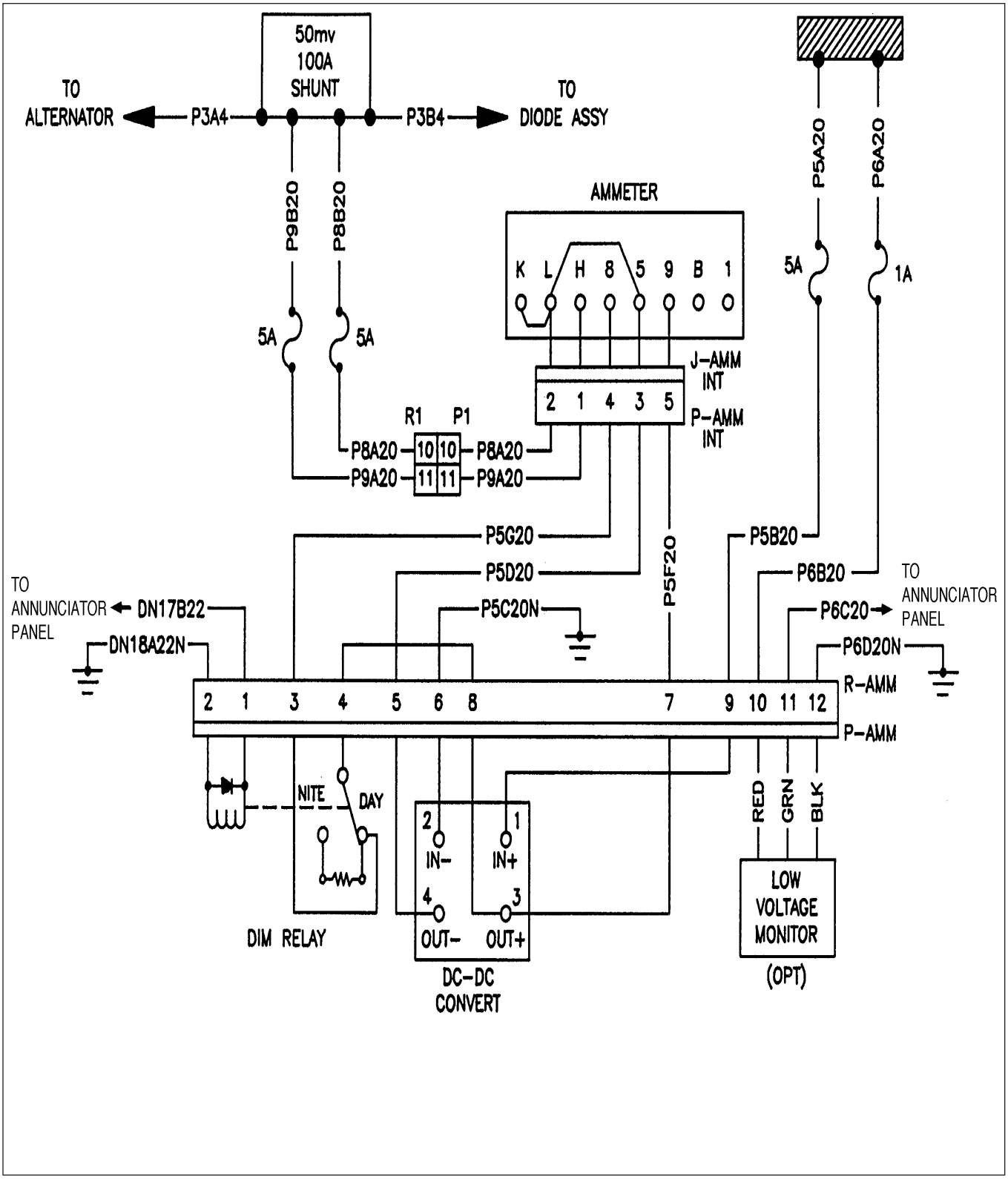

Ammeter / Low Voltage Monitor (PA-32R-301 S/N's 3213029 and 3213042 and up)
Figure 91-36

THIS PAGE INTENTIONALLY LEFT BLANK

THIS PAGE INTENTIONALLY LEFT BLANK

THIS PAGE INTENTIONALLY LEFT BLANK

CHAPTER

95

SPECIAL PURPOSE EQUIPMENT

CHAPTER 95 - SPECIAL PURPOSE EQUIPMENT

TABLE OF CONTENTS/EFFECTIVITY

CHAPTER SECTION	SUBJECT	GRID NO.	EFFECTIVITY
95-00-00	GENERAL	4J8	July 1, 1993
95-00-00	Tire Balancer	4J8	July 1, 1993
95-00-00	Tire Balancer Building Instructions	4J8	July 1, 1993
95-00-00	Control Surface Balancing Tool	4J9	July 1, 1993
95-00-00	Balancing Control Surfaces	4J9	July 1, 1993
95-00-00	Gear Back-Up Extender Actuator Aligning Tool	4J11	July 1, 1993
95-00-00	Fabricated Tool for Baggage Door Lock	4J12	July 1, 1993
95-00-00	Fabricated Aileron Bellcrank Rigging Tool	4J13	July 1, 1993
95-00-00	Fabricated Rudder Rigging Tool	4J13	July 1, 1993
95-00-00	Fabricated Aileron and Flap Rigging Tool	4J14	July 1, 1993
95-00-00	Fabricated Stabilator Rigging Tool	4J15	July 1, 1993

THIS PAGE INTENTIONALLY LEFT BLANK

GENERAL.

TIRE BALANCER.

TIRE BALANCER BUILDING INSTRUCTIONS.

1. Chamfer top edges of -3 sides, leaving 1/16 inch flat on top inboard edge. Rivet -2 tee's to -3 sides using AN 470-AD5 rivets 2 inch spacing. Use AN 426-AD5 rivets 2 inch center to center to secure -2 tee's to -1 base. If tee extrusion is unavailable, heavy angle extrusion could be used. -3 sides must be vertical.
2. The -4 axle must slide through the -8 pipe. The -5 nuts were made by reaming the existing threads in the AN 365-624 nuts with an R drill, then tapping with a 1/8-27 pipe tap.
3. The -6 spacers were made from 1/2 inch aluminum tubing. The two lengths of spacers are suitable for balancing most any aircraft wheel.
4. The -7 bushings may be made from one inch phenolic or aluminum using a 1-1/2 inch hole saw to cut out the smaller bushing and a 1-3/4 hole saw to cut out the larger. By inserting a 1/4 inch long threaded bolt through the pilot hole and securing with a washer and nut, a drill press and file may be used to make the off-set on the bushing. The turned-down part should just slide inside the bearing race. Ream the pilot hole to slide over the -8 pipe threads.
5. The -8 pipe was made from a piece of 1/8 inch black pipe and threaded with a 1/8-27 pipe die. Thread 3 inches in from each end of the pipe.

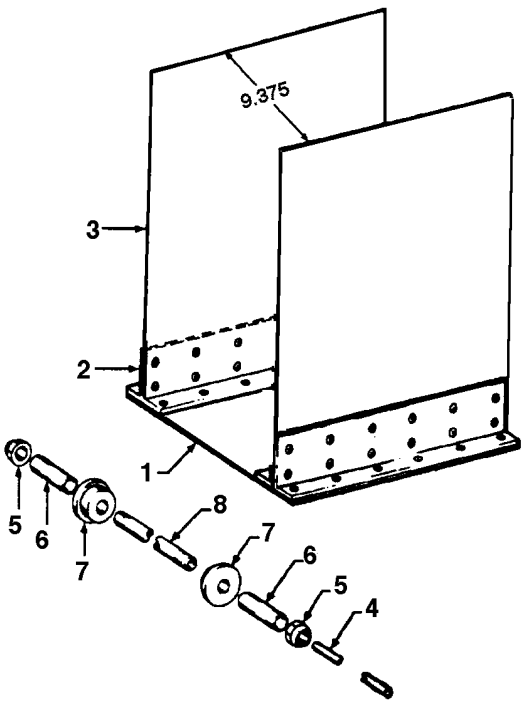

The following list of material were used in making the balancer:

-1	1 ea. Base	12 x 11	0.190 2024 T3 clad aluminum alloy
-2	2 ea. Tee	2.5 x 2 x 11	0.190 2024 T4 extruded aluminum alloy
-3	2 ea. Sides	14 x 11	0.125 2024 T3 clad aluminum alloy
-4	1 ea Axle	0.125 x 10.25	4130 steel, normalized
-5	2 ea. Nuts	AN 365-624	
-6	2 ea. Spacer	0.50 X 2.25	5052-0 aluminum tubing
	2 ea. Spacer	0.50 X 1.25	5052-0 aluminum tubing
-7	2 ea. Bushing	1.480 X 1.625 X 1.00	Richlight, phenolic or aluminum
	2 ea. Bushing	2.240 X 1.37 X 1.00	Richlight, phenolic or aluminum
-8	1 ea. Pipe	1/8 X 9.3	Black steel pipe
*	2 ea. Bearings	Save two of each size worn wheel bearings from previous inspections	

Tire Balancer Fixture
Figure 1

CONTROL SURFACE BALANCING TOOL.

BALANCING CONTROL SURFACES.

1. Ensure that the control surface is in its final flight configuration, static wicks, trim tabs, trim tab push-pull rod and control surface tip (as applicable) should be installed. The surface should be painted and trim/servo tabs should be in the neutral position.

– NOTE –

Because paint is a considerable balance factor, it is recommended that existing paint be removed prior to repainting a control surface.

2. Place hinge bolts through control surfaces and place control surface on a holding fixture.
3. Avoiding rivets, place the balancing tool on the control surface with the tool's hinge centerline directly over the hinge line of the control surface.
4. Adjust the movable trailing edge support to fit the width of the control surface. Tighten the set screw on the trailing edge support.
5. Adjust the trailing edge support vertically until the beam is parallel with the control surface chordline.
6. Remove the tool from the control surface and balance the tool itself by adding or removing nuts or washers from the beam balance bolt. When balancing the tool, the movable weight must be at the bar's hinge centerline.
7. After balancing tool, reattach it to the control surface. Keep the beam positioned 90 degrees from the control surface hinge line.
8. Determine balance control surface by sliding movable weight along the balance beam.
9. Read the scale when the bubble in the level has been centered. Since the movable weight weighs three-pounds, every inch it is moved from the center of the beam equals three inch-pounds of force.

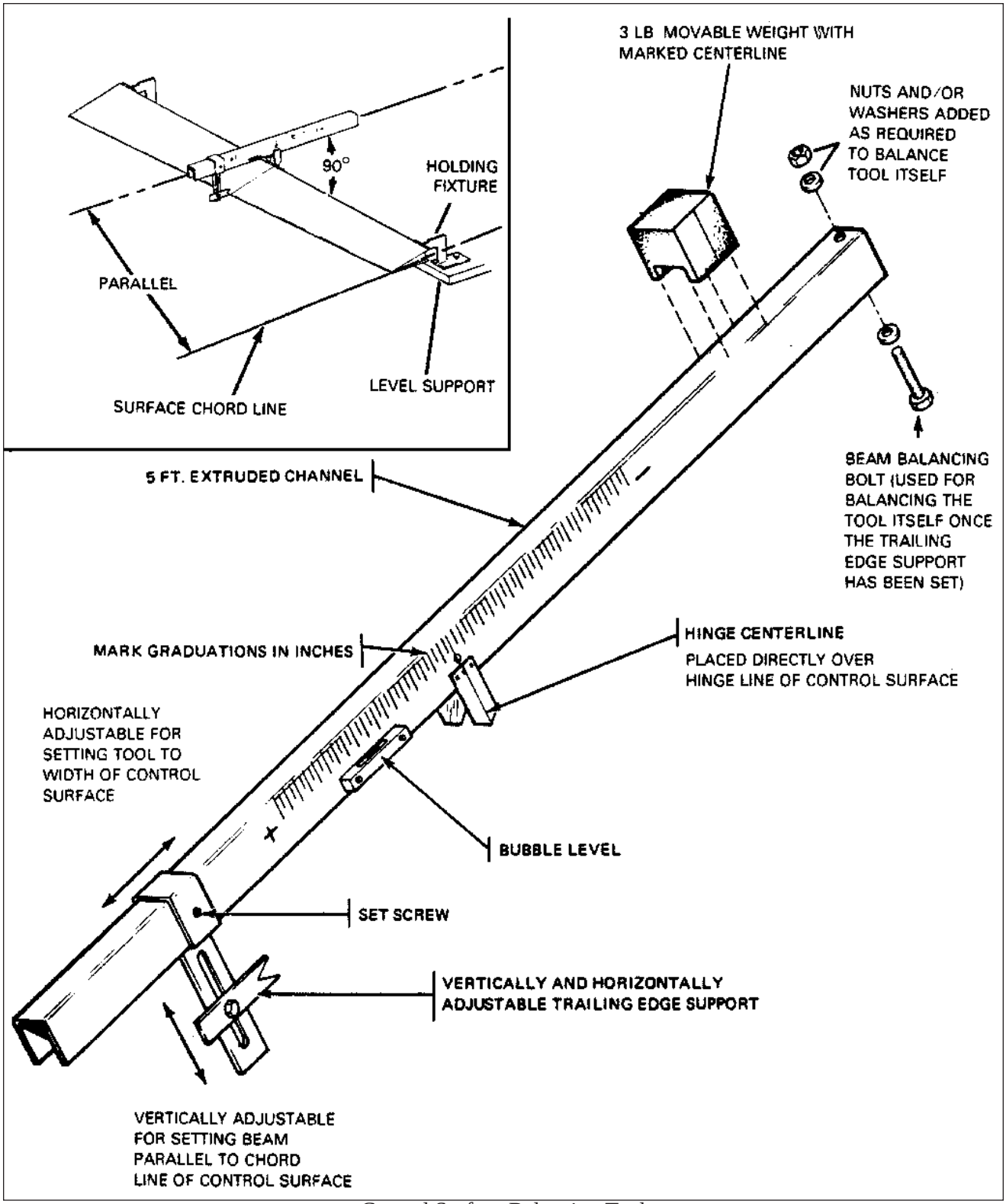

Control Surface Balancing Tool
Figure 2

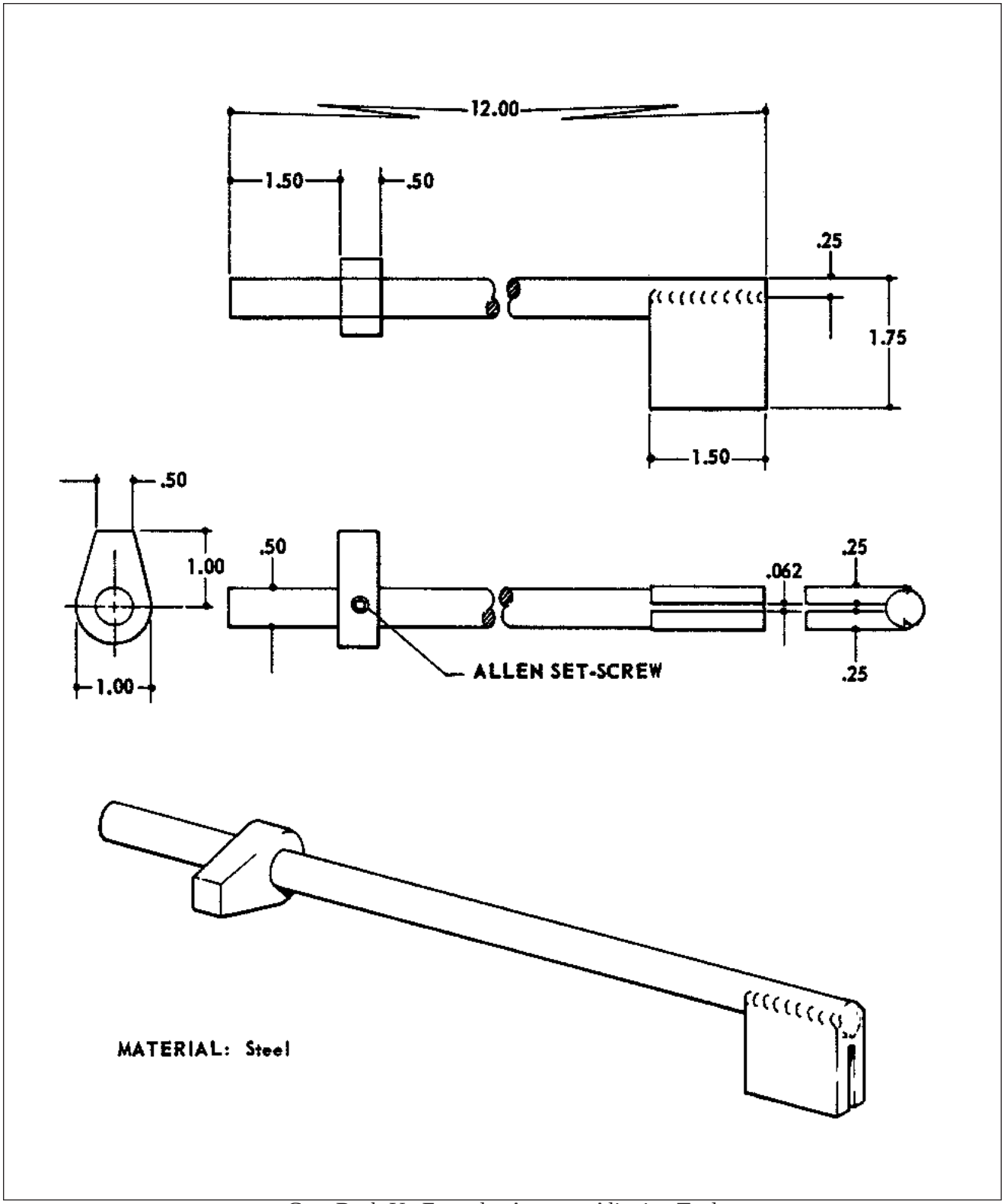

Gear Back-Up Extender Actuator Aligning Tool
Figure 3

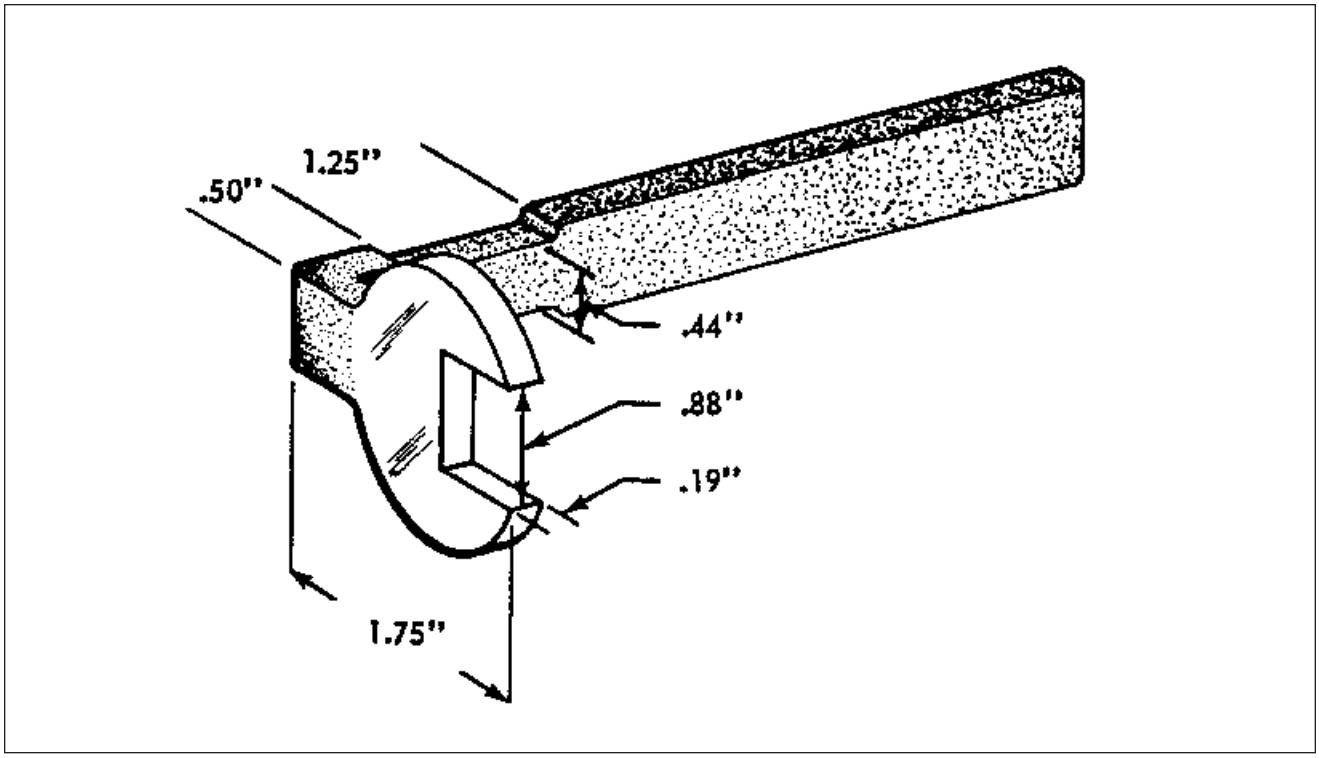

Fabricated Tool for Baggage Door Lock
Figure 4

THIS SPACE INTENTIONALLY LEFT BLANK

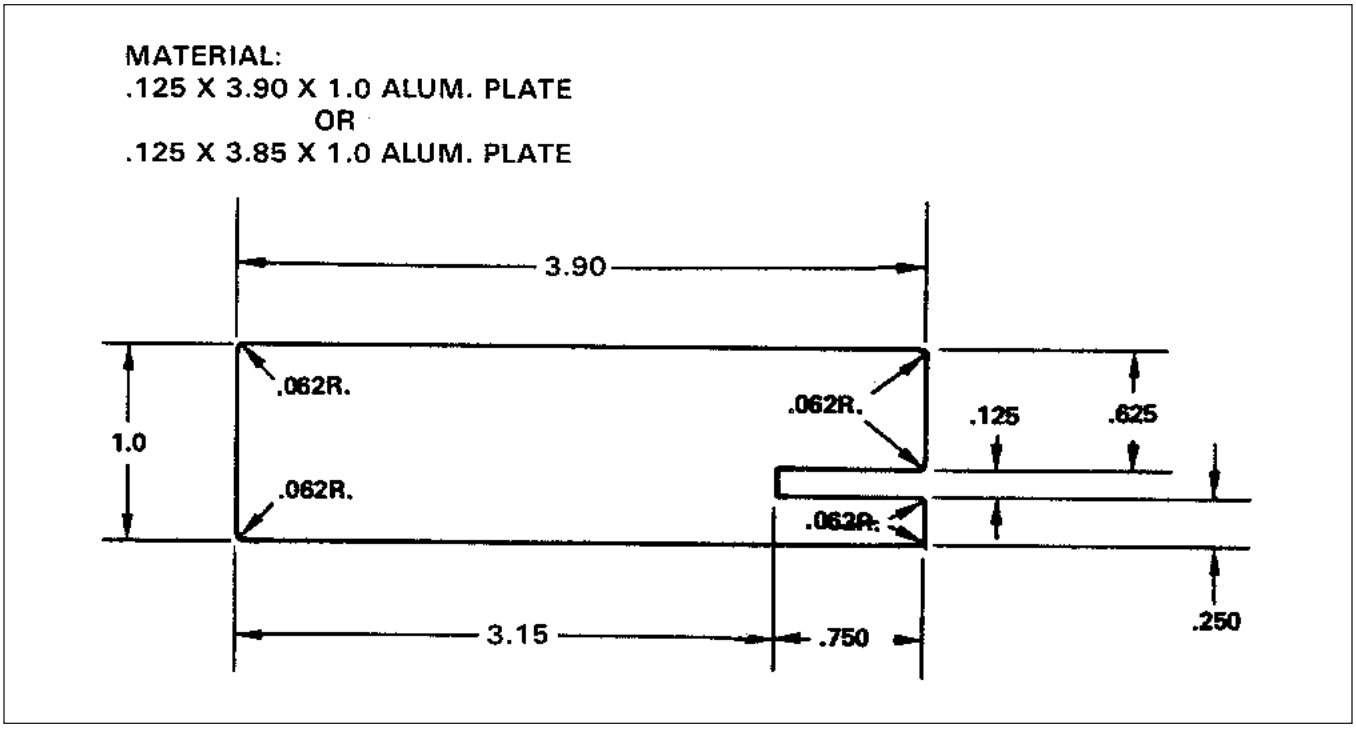

Fabricated Aileron Bellcrank Rigging Tool
Figure 5

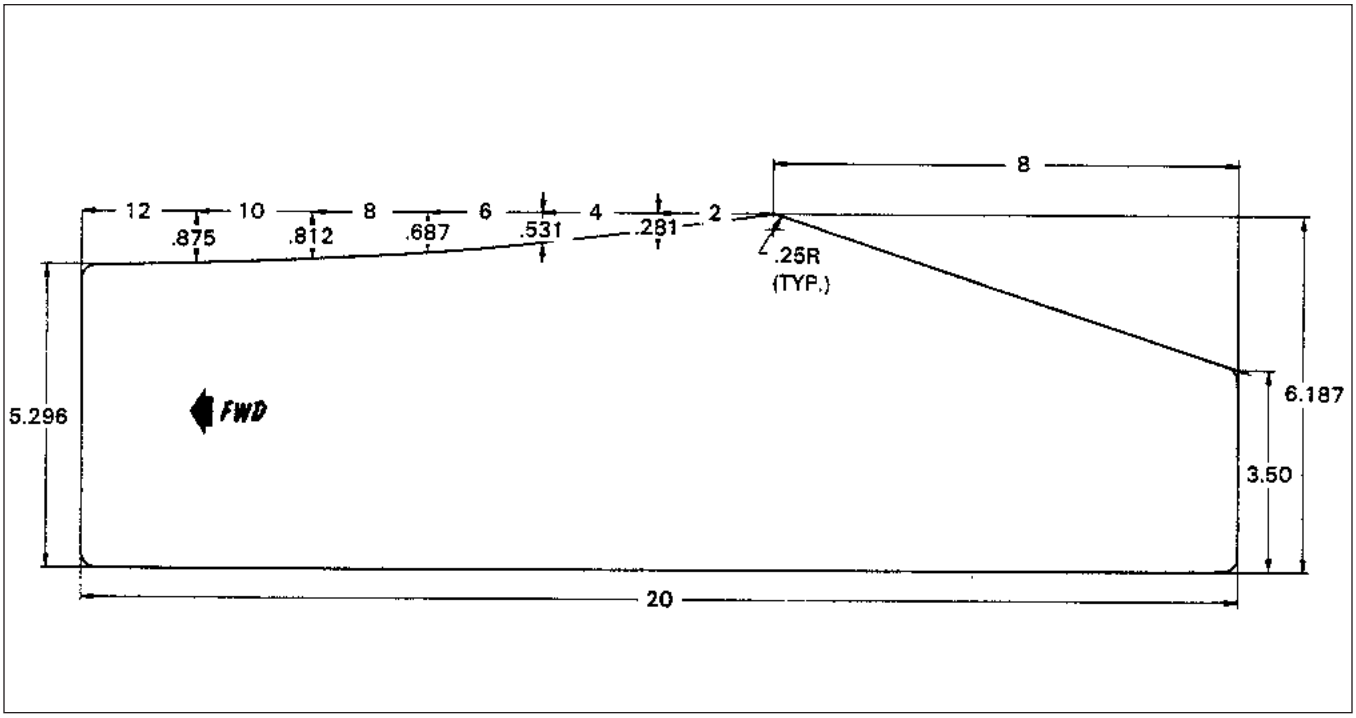

Fabricated Rudder Rigging Tool
Figure 6

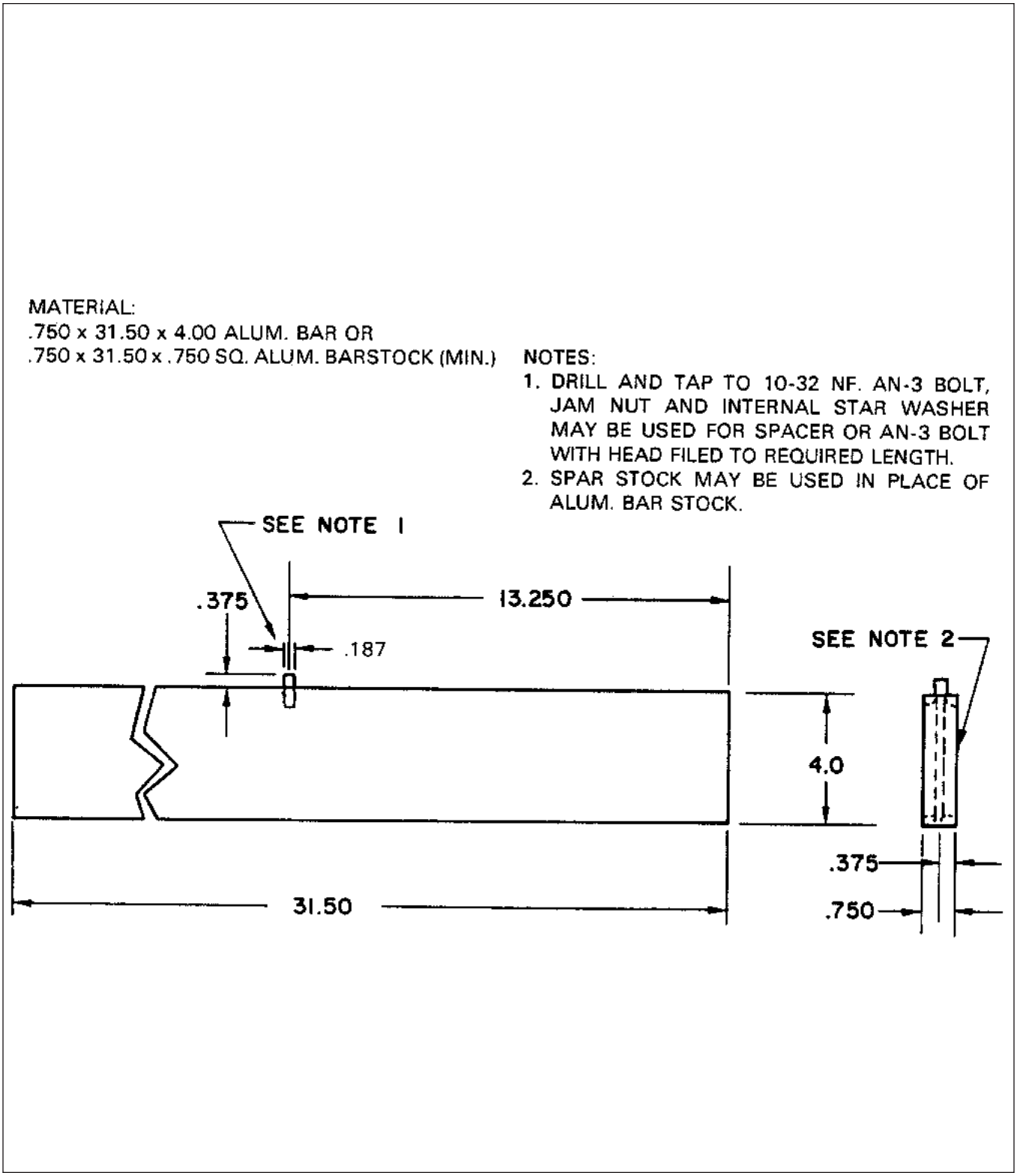

Fabricated Aileron and Flap Rigging Tool
Figure 7

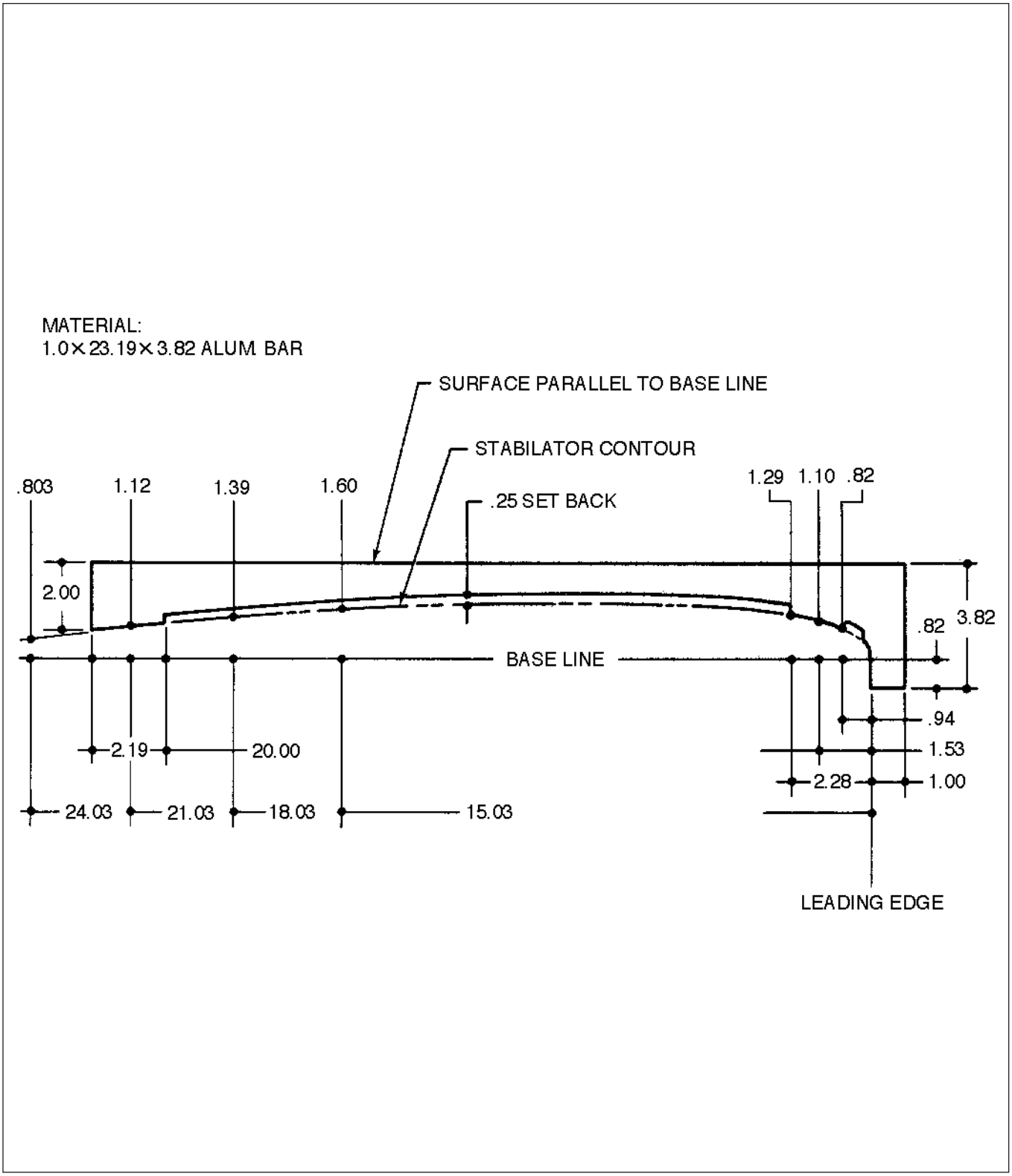

Fabricated Stabilator Rigging Tool
Figure 8

GRIDS 4J16 THRU 4L24 INTENTIONALLY LEFT BLANK