

Automotive Power Selection Guide 2018

Ultimate power – perfect control

www.infineon.com/automotivepower

Downloaded from Arrow.com.



The ultimate power to control your applications including automotive, transportation, industrial, lighting and motor control.

For a comprehensive and reliable portfolio of products for automotive and other applications, look no further than the product range from Infineon. We have used our 40 years of experience of developing and producing products to meet the demands of the automotive market, and our innovative technologies to design and produce a large number of power products that meet all requirements of the automotive industry and also the transportation, lighting and motor-drive industries.

Our commitment to quality is demonstrated through our focus on automotive excellence, the most rigorous zero defect program in the industry.

This selection guide provides an overview of our ICs and their packages, which are automotive qualified (AEC-Q100 or AEC-Q101) and available for your current and future electronic system designs.

Downloaded from Arrow.com.

Automotive applications

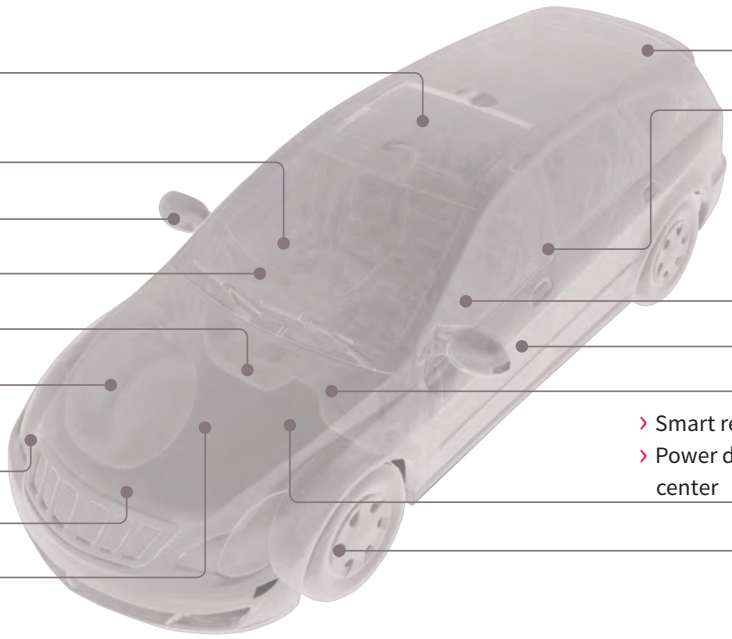

- Electric sunroof
- Airbag
- Electric mirrors
- Font wiper
- Body control module/gateway
- Starter alternator
- Lighting
- Headlight leveling
- HVAC
- Hybrid
- Rear wiper
- Suspension
- Window lift
- Power seat
- Power door
- Steering
- Smart relay box
- Power distribution center
- Throttle control
- Engine control
- Transmission
- Brake system

Automotive power components used in other applications



Downloaded from Arrow.com.



We shape the future of mobility

With microelectronics enabling clean, safe, smart cars

For leading solutions in automotive electronics from the pioneer in the industry, turn to Infineon Technologies. Choose our semiconductors for your body, powertrain, safety, and hybrid and electric vehicle applications and profit from products resulting from nearly 40 years of experience in automotive applications and standards. Our commitment to innovation and high quality means you can count on us to successfully drive your applications into the tomorrow and beyond.

- Car IT-security and connectivity
- Hybrid and electric powertrain
- Safety and ADAS
- Body and convenience
- Powertrain

www.infineon.com/automotive

Downloaded from Arrow.com.

Contents

MOSFETs 6
- 24–300 V OptiMOS™ Automotive MOSFETs 10
- Small Signal MOSFETs 24
- 600/650 V CoolMOS™ Power MOSFETs 28

IGBTs: discretes and modules 30

Low-side switches 34
- Temperature protected switches TEMPFET™ 34
- Protected low-side switches HITFET™ 35

Smart multichannel switches 38
- For body (SPIDER+) 38
- For powertrain and safety 42

High-side switches 46
- Protected high-side switches PROFET™ 46
- SPI power controller SPOC™+2 53

LED driver 55
- LITIX™: Infineon® Automotive LED driver 55
- SPIDER+ LED smart multichannel switches 61

Motor drivers 62
- Integrated low-current motor drivers 63
- Integrated high-current motor drivers 66
- Half-bridge with integrated Driver IC 68
- Gate driver ICs for external MOSFETs 69
- Gate drivers for automotive high-voltage applications 71
- Gate drivers for power distribution 73
- Infineon® Embedded Power ICs 75

Power supply ICs 82
- Voltage regulators 83
- DC-DC converter 94
- System supply 96

Transceivers 100

System ICs 106
- System Basis Chips (SBCs) 106
- Powertrain system ICs 113
- Engine management system ICs 115
- Small engine management ICs 116
- Restraint system ICs 118

Support 119

Glossary 121

Symbols 130

Packages 134

Downloaded from Arrow.com.

Automotive MOSFETs do contribute to your success

We offer you high quality beyond AEC-Q101

The amount of power MOSFETs per car continuously increases, as more features are embedded in every new car sold worldwide. The amount of MOSFETs becomes even higher in electric high-end cars where up to 400 MOSFETs can be found in a single car. For this reason it gets more and more important to use high quality Automotive MOSFETs.

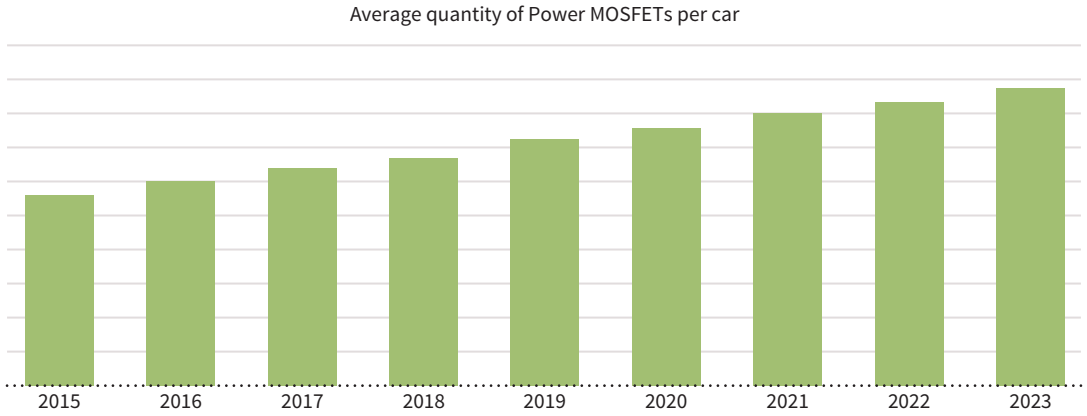

All Automotive qualified MOSFETs are following the AEC-Q101 qualification standard. Infineon does more than that in order to achieve more robust products and a very low dpm rate.

Why is AEC-Q101 not enough for us?

› It may not cover “untypical or stringent” mission profiles
› It does not provide any indication on the stability of the manufacturing process over the years
› It doesn’t prove any dpm below 10 000

How do we achieve the best quality you can get in the market?

› Robustness
  – Strong application know-how, good requirement capturing for product, technology and process roadmaps
  – Dedicated Automotive Design Goals based on 40 years of experience in automotive
  – Stringent product monitoring/process controls
  – Enhanced test coverage
› Enhanced testing and qualification
  – More than just the datasheet parameters
  – Qualification beyond AEC-Q101
  – Usage of PAT (Part Average Testing) in front-end and back-end for power MOSFET

What have we achieved so far?

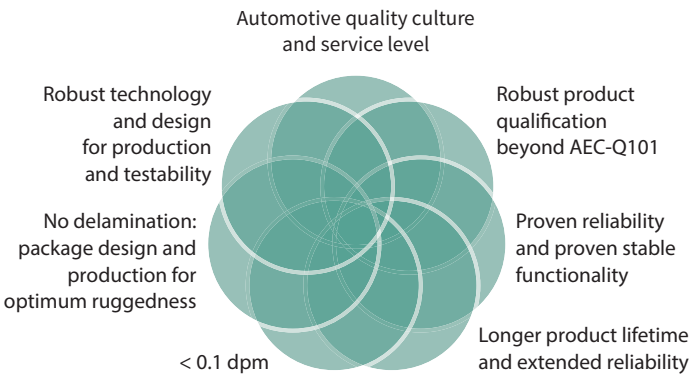

www.infineon.com/automotivemosfet

Downloaded from Arrow.com.

OptiMOS™ Automotive MOSFETs

Infineon automotive MOSFET portfolio offers benchmark quality, wide voltage range and diversified package

- Best in class $R_{DS(on)}$ performance for increased system efficiency
- Lowest switching and conduction power losses for increased thermal system reliability
- Benchmark for quality and reliability
- Wide voltage range from 24 to 300 V for N-Channel FET, and from 20 to 150 V for P-Channel FET
- Robust green package for easy process handling
- Diversified package portfolio caters to customers' needs for
  - Package size minimization (down to 11 mm² in S3O8)
  - High current capability (up to 300 A in TOLL)

AEC Qualified

RoHS

N-Channel

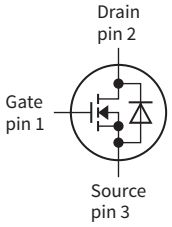

P-Channel

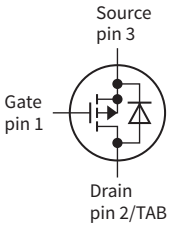

Dual channel

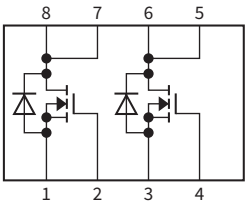

Polarity	Voltage class [V]	Trench MOSFET						Planar MOSFET		
		OptiMOS™-5	OptiMOS™-T2	OptiMOS™-T	Gen12.7 former IR MOSFETs	Gen10.7 former IR MOSFETs	Gen10.2 former IR MOSFETs	OptiMOS™	Gen7 former IR MOSFETs	Gen5 former IR MOSFETs
N-Channel	24						●			
N-Channel	30		●				●	●	●	●
N-Channel	40	●	●	●	●	●	●	●	●	
N-Channel	55						●	●	●	●
N-Channel	60		●			●	●		●	
N-Channel	75					●	●	●	●	
N-Channel	80	●	●							
N-Channel	100	●	●	●		●	●			●
N-Channel	120		●							
N-Channel	150					●				●
N-Channel	200					●				
N-Channel	250			●		●				
N-Channel	300					●				
P-Channel	20									●
P-Channel	30		●							●
P-Channel	40		●							
P-Channel	55									●
P-Channel	100									●
P-Channel	150									●
Dual N-Channel	2 x 30									●
Dual N-Channel	2 x 40		●		●					
Dual N-Channel	2 x 50									●
Dual N-Channel	2 x 55							●		●
Dual N-Channel	2 x 60		●							
Dual N-Channel	2 x 100		●							
Dual P-Channel	2 x 20									●
Dual P-Channel	2 x 30									●
Dual P-Channel	2 x 55									●
Dual N+P Channel	2 x 30									●
Dual N+P Channel	2 x 55									●

www.infineon.com/automotivemosfet

Downloaded from Arrow.com.



Automotive MOSFET naming system for new products

I	A	U	D	180	N	04	S5	N	055	X

I Infineon

A Automotive

U/X Standard/ extended (i.e. qualification)

Package type:
- A sTOLL
- B TO263/D²PAK
- C Single SSO8 (TDSON-8)
- D TO252/DPAK
- E Embedding standard cell
- G Dual SSO8 (TDSON-8)
- I TO262/I²PAK
- P TO220
- S TOLG (SUPiRPAK)
- T TOLL (H-PSOF, MO-299)
- Z S3O8 (TSDSON-8)

Continuous drain current I_D (max)
IAUD50 for a 50 A DPAK

P P-Channel
N N-Channel

Breakdown voltage:
$V_{BrDSS} \div 10$

Technology:
- S5 OptiMOS™-5
- S6 OptiMOS™-6

L Logic level
N Normal level

$R_{DS(on)}$ (max) xx.x mΩ

Additional package type

www.infineon.com/automotivemosfet

Downloaded from Arrow.com.

Infineon automotive MOSFET naming system



I Infineon

Device:
P for Power-MOSFET
T for twin Power-MOSFET (common drain)

Package type:
B for TO263/D²PAK
C for SuperSO8 (TDSON-8)
D for TO252/DPAK
I for TO262/I²PAK
LU for TO-leadless (H-PSOF, MO-299)
P for TO220
G for dual SuperSO8 (TDSON-8)
Z for shrink SuperSO8 (TSDSON-8)

Continuous drain current I_D (max)

P for P-Channel
N for N-Channel

AOI-ready
Only valid for TDSON dual

$R_{DS(on)}$ (max) in mΩ
"H" in front for higher ohmic version
i.e. H5 = 5.5 mΩ
"R" as decimal separator
i.e. 1R3 = 1.3 mΩ

L for logic level

S for SFET1
S2 for OptiMOS™
S3 for OptiMOS™-T
S4 for OptiMOS™-T2
S5 for OptiMOS™-5
P3 for PFET3 trench
P4 for PFET4 trench

Breakdown voltage:
V_{BrDSS} ÷ 10

Former IRF COOLiRFET™ naming system



Automotive grade:
AEC-Q101

IR HEXFET™:
IRF Standard gate
IRL Logic level gate

Package type:
S D²PAK
S-7P D²PAK-7P
SL TO-262
WL (suffix) TO-262 wide lead
B TO-220
N PQFN
R DPAK
U TO252 (IPAK)
C Die sale

For die sale:
B Whole wafer
F Die on film
D Chip pack

For packaging options:
KD Known good die in chip pack
KT Known good die in tape and reel
Blank Tube
TR Tape and reel
TR (R,L) Tape and reel (right, left)

Die size

Voltage rating:
4 40 V

Product family:
8 Gen 12.7

www.infineon.com/automotivemosfet

Downloaded from Arrow.com.

Automotive N-Channel MOSFETs

24 V (Trench)

Product name	Technology	$R_{DS(on)}$ @ 10 V [mΩ]	I_D [A]	R_{thJC} (max) [K/W]	$V_{GS(th)}$ (min–max) [V]	Q_G (typ) [nC]	Normal/ logic level	Package[1]
AUIRF1324S-7P	Gen 10.2	1.00	240	0.50	2.00 … 4.00	180	Normal	TO-263-7 (D^2PAK 7-leg)
AUIRF1324WL	Gen 10.2	1.30	240	0.50	2.00 … 4.00	120	Normal	TO-262 WideLead
AUIRF1324	Gen 10.2	1.50	195	0.50	2.00 … 4.00	160	Normal	TO-220
AUIRFP2602	Gen 10.2	1.60	180	0.40	2.00 … 4.00	260	Normal	TO-247
AUIRF1324S	Gen 10.2	1.65	195	0.50	2.00 … 4.00	160	Normal	TO-263-3 (D^2PAK)

30 V (Trench)

Product name	Technology	$R_{DS(on)}$ @ 10 V [mΩ]	I_D [A]	R_{thJC} (max) [K/W]	$V_{GS(th)}$ (min–max) [V]	Q_G (typ) [nC]	Normal/ logic level	Package[1]
IPB240N03S4L-R8	OptiMOS™-T2	0.76	240	0.50	1.00 … 2.20	290	Logic	TO263-7-3
IPB240N03S4L-R9	OptiMOS™-T2	0.92	240	0.70	1.00 … 2.20	230	Logic	TO263-7-3
IPB180N03S4L-H0	OptiMOS™-T2	0.95	180	0.60	1.00 … 2.20	230	Logic	TO263-7-3
IPB180N03S4L-01	OptiMOS™-T2	1.05	180	0.80	1.00 … 2.20	187	Logic	TO263-7-3
IPD90N03S4L-02	OptiMOS™-T2	2.20	90	1.10	1.00 … 2.20	110	Logic	TO252-3 (DPAK)
IPB80N03S4L-02	OptiMOS™-T2	2.40	80	1.10	1.00 … 2.20	110	Logic	TO263-3-2
AUIRF2903ZL	Gen 10.2	2.40	160	0.65	2.00 … 4.00	160	Normal	TO-262
AUIRF2903ZS	Gen 10.2	2.40	160	0.65	2.00 … 4.00	160	Normal	TO-263-3 (D^2PAK)
IPI80N03S4L-03	OptiMOS™-T2	2.70	80	1.10	1.00 … 2.20	110	Logic	TO262-3
IPP80N03S4L-03	OptiMOS™-T2	2.70	80	1.10	1.00 … 2.20	110	Logic	TO220-3
IPB120N03S4L-03	OptiMOS™-T2	3.00	120	1.90	1.00 … 2.20	55	Logic	TO263-3-2
IPD90N03S4L-03	OptiMOS™-T2	3.30	90	1.60	1.00 … 2.20	60	Logic	TO252-3 (DPAK)
IPB80N03S4L-03	OptiMOS™-T2	3.40	80	1.60	1.00 … 2.20	60	Logic	TO263-3-2
IPD70N03S4L-04	OptiMOS™-T2	4.30	70	2.20	1.00 … 2.20	37	Logic	TO252-3 (DPAK)
IPD50N03S4L-06	OptiMOS™-T2	5.50	50	2.70	1.00 … 2.20	24	Logic	TO252-3 (DPAK)
IPD40N03S4L-08	OptiMOS™-T2	8.00	40	3.60	1.00 … 2.20	15	Logic	TO252-3 (DPAK)
IPD30N03S4L-09	OptiMOS™-T2	9.00	30	3.60	1.00 … 2.20	15	Logic	TO252-3 (DPAK)
IPD30N03S4L-14	OptiMOS™-T2	13.60	30	4.90	1.00 … 2.20	11	Logic	TO252-3 (DPAK)
IPB22N03S4L-15	OptiMOS™-T2	14.60	22	4.90	1.00 … 2.20	11	Logic	TO263-3-2

40 V (Trench)

Product name	Technology	$R_{DS(on)}$ @ 10 V [mΩ]	I_D [A]	R_{thJC} (max) [K/W]	$V_{GS(th)}$ (min–max) [V]	Q_G (typ) [nC]	Normal/ logic level	Package[1]
AUIRF8739L2	Gen 12.7	0.60	375	0.44	2.20 … 3.90	375.00	Normal	DirectFET™2 L8
AUIRFSA8409-7P	Gen 12.7	0.69	360	0.40	2.20 … 3.90	305.00	Normal	TO-263-7 (D^2PAK 7-leg)
AUIRLS8409-7P	Gen 12.7	0.75	240	0.40	1.00 … 2.40	177.00	Logic	TO-263-7 (D^2PAK 7-leg)
AUIRFS8409-7P	Gen 12.7	0.75	240	0.40	2.20 … 3.90	305.00	Normal	TO-263-7 (D^2PAK 7-leg)
IPLU300N04S4-R8	OptiMOS™-T2	0.77	300	0.35	2.00 … 4.00	221.00	Normal	HSOF-8-1 (H-PSOF)
IPB240N04S4-R9	OptiMOS™-T2	0.87	240	0.50	2.00 … 4.00	220.00	Normal	TO263-7-3
IPB180N04S4-00	OptiMOS™-T2	0.98	180	0.50	2.00 … 4.00	220.00	Normal	TO263-7-3
IPB240N04S4-1R0	OptiMOS™-T2	1.00	240	0.65	2.00 … 4.00	170.00	Normal	TO263-7-3
IPB180N04S4L-H0	OptiMOS™-T2	1.00	180	0.60	1.20 … 2.20	239.00	Logic	TO263-7-3
AUIRF7739L2	Gen 10.7	1.00	270	1.20	2.00 … 4.00	220.00	Normal	DirectFET™2 L8
AUIRFS8408-7P	Gen 12.7	1.00	240	0.51	2.20 … 3.90	210.00	Normal	TO263-7-3

1) See packages on page 134 to 136

Downloaded from Arrow.com.

40 V (Trench) (cont'd)



Product name	Technology	$R_{DS(on)}$ @ 10 V [mΩ]	I_D [A]	R_{thJC} (max) [K/W]	$V_{GS(th)}$ (min–max) [V]	Q_G (typ) [nC]	Normal/ logic level	Package[1]
IPB180N04S4-H0	OptiMOS™-T2	1.10	180	0.60	2.00 … 4.00	173.00	Normal	TO263-7-3
IPC100N04S5L-1R1	OptiMOS™-5	1.10	100	1.00	1.20 … 2.00	105.00	Logic	TDSON-8-34 SuperSO8 single
IPLU300N04S4-1R1	OptiMOS™-T2	1.15	300	0.50	2.00 … 4.00	116.00	Normal	HSOF-8-1 (H-PSOF)
IPB180N04S4L-01	OptiMOS™-T2	1.20	180	0.80	1.20 … 2.20	188.00	Logic	TO263-7-3
AUIRFS8409	Gen 12.7	1.20	195	0.40	2.20 … 3.90	300.00	Normal	TO-263-3 (D^2PAK)
AUIRFSL8409	Gen 12.7	1.20	195	0.40	2.20 … 3.90	300.00	Normal	TO-262
IPC100N04S5-1R2	OptiMOS™-5	1.20	100	1.00	2.20 … 3.40	99.00	Normal	TDSON-8-34 SuperSO8 single
IPB180N04S4-01	OptiMOS™-T2	1.30	180	0.80	2.00 … 4.00	135.00	Normal	TO263-7-3
AUIRFB8409	Gen 12.7	1.30	195	0.40	2.20 … 3.90	300.00	Normal	TO-220
AUIRFS8407-7P	Gen 12.7	1.30	240	0.65	2.20 … 3.90	150.00	Normal	TO-263-7 (D^2PAK 7-leg)
AUIRF3004WL	Gen 10.7	1.40	240	0.40	2.00 … 4.00	140.00	Normal	TO-262 WideLead
AUIRLS3034-7P	Gen 10.7	1.40	240	0.40	1.00 … 2.50	120.00	Logic	TO-263-7 (D^2PAK 7-leg)
IPB160N04S4L-H1	OptiMOS™-T2	1.50	160	0.90	1.20 … 2.20	146.00	Logic	TO263-7-3
IPI120N04S4-01	OptiMOS™-T2	1.50	120	0.80	2.00 … 4.00	135.00	Normal	TO262-3
IPB120N04S4-01	OptiMOS™-T2	1.50	120	0.80	2.00 … 4.00	135.00	Normal	TO263-3-2
IPC100N04S5L-1R5	OptiMOS™-5	1.50	100	1.30	1.20 … 2.00	70.00	Logic	TDSON-8-34 SuperSO8 single
IPB160N04S4-H1	OptiMOS™-T2	1.60	160	0.90	2.00 … 4.00	105.00	Normal	TO263-7-3
AUIRF7738L2	Gen 10.7	1.60	184	1.60	2.00 … 4.00	129.00	Normal	DirectFET™2 L6
IPLU250N04S4-1R7	OptiMOS™-T2	1.70	250	0.80	2.00 … 4.00	76.00	Normal	HSOF-8-1 (H-PSOF)
IPB120N04S4L-02	OptiMOS™-T2	1.70	120	0.95	1.20 … 2.20	143.00	Logic	TO263-3-2
AUIRFP4004	Gen 10.2	1.70	195	0.40	2.00 … 4.00	220.00	Normal	TO-247
IPC100N04S5-1R7	OptiMOS™-5	1.70	100	1.30	2.20 … 3.40	62.00	Normal	TDSON-8-34 SuperSO8 single
IPB120N04S4-02	OptiMOS™-T2	1.80	120	0.95	2.00 … 4.00	103.00	Normal	TO263-3-2
AUIRFS8407	Gen 12.7	1.80	195	0.65	2.20 … 3.90	150.00	Normal	TO-263-3 (D^2PAK)
AUIRFSL8407	Gen 12.7	1.80	195	0.65	2.20 … 3.90	150.00	Normal	TO-262
IPD100N04S4L-02	OptiMOS™-T2	1.90	100	1.00	1.20 … 2.20	126.00	Logic	TO252-3 (DPAK)
IPI120N04S4-01	OptiMOS™-T2	1.90	120	0.80	2.00 … 4.00	135.00	Normal	TO262-3
AUIRF7737L2	Gen 10.7	1.90	156	1.80	2.00 … 4.00	89.00	Normal	DirectFET™2 L6
AUIRF8736M2	Gen 12.7	1.90	137	2.40	2.20 … 3.90	136.00	Normal	DirectFET™2 M4
IPC100N04S5L-1R9	OptiMOS™-5	1.90	100	1.50	1.20 … 2.00	61.00	Logic	TDSON-8-34 SuperSO8 single
IPC100N04S5-1R9	OptiMOS™-5	1.90	100	1.50	2.20 … 3.40	50.00	Normal	TDSON-8-34 SuperSO8 single
AUIRFR8405	Gen 12.7	1.98	100	0.92	2.20 … 3.90	103.00	Normal	TO-252 (DPAK)
AUIRFU8405	Gen 12.7	1.98	100	0.92	2.20 … 3.90	103.00	Normal	IPAK
IPD100N04S4-02	OptiMOS™-T2	2.00	100	1.00	2.00 … 4.00	91.00	Normal	TO252-3 (DPAK)
AUIRFB8407	Gen 12.7	2.00	195	0.65	2.20 … 3.90	150.00	Normal	TO-220
IPB90N04S4-02	OptiMOS™-T2	2.10	90	1.00	2.00 … 4.00	91.00	Normal	TO263-3-2
IPI120N04S4-02	OptiMOS™-T2	2.10	120	0.95	2.00 … 4.00	103.00	Normal	TO262-3
AUIRFSL8405	Gen 12.7	2.30	120	0.92	2.20 … 3.90	107.00	Normal	TO-262
IPD90N04S4-02	OptiMOS™-T2	2.40	90	1.00	2.00 … 4.00	91.00	Normal	TO252-3 (DPAK)
IPB100N04S4-H2	OptiMOS™-T2	2.40	100	1.30	2.00 … 4.00	70.00	Normal	TO263-3-2
IPI90N04S4-02	OptiMOS™-T2	2.50	90	1.00	2.00 … 4.00	91.00	Normal	TO262-3
AUIRFB8405	Gen 12.7	2.50	120	0.92	2.20 … 3.90	107.00	Normal	TO-220
IPC100N04S5L-2R6	OptiMOS™-5	2.60	100	2.00	1.20 … 2.00	41.00	Logic	TDSON-8-33 SuperSO8 single
IPI100N04S4-H2	OptiMOS™-T2	2.70	100	1.30	2.00 … 4.00	70.00	Normal	TO262-3
IPP100N04S4-H2	OptiMOS™-T2	2.70	100	1.30	2.00 … 4.00	70.00	Normal	TO220-3
IPZ40N04S5L-2R8	OptiMOS™-5	2.80	40	2.10	1.20 … 2.00	39.00	Logic	TSDSON-8
IPC100N04S5-2R8	OptiMOS™-5	2.80	100	2.00	2.20 … 3.40	34.00	Normal	TDSON-8-33 SuperSO8 single
AUIRF7736M2	Gen 10.7	3.00	108	2.40	2.00 … 4.00	72.00	Normal	DirectFET™2 M4
AUIRL7736M2	Gen 10.7	3.00	112	2.40	1.00 … 2.50	52.00	Logic	DirectFET™2 M4
IPZ40N04S5-3R1	OptiMOS™-5	3.10	40	2.10	2.20 … 3.40	31.00	Normal	TSDSON-8
AUIRFR8403	Gen 12.7	3.10	100	1.52	2.20 … 3.90	66.00	Normal	TO-252 (DPAK)

1) See packages on page 134 to 136

www.infineon.com/automotivemosfet

Downloaded from Arrow.com.

Automotive N-Channel MOSFETs

40 V (Trench) (cont'd)



Product name	Technology	$R_{DS(on)}$ @ 10 V [mΩ]	I_D [A]	R_{thJC} (max) [K/W]	$V_{GS(th)}$ (min–max) [V]	Q_G (typ) [nC]	Normal/ logic level	Package[1]
AUIRFU8403	Gen 12.7	3.10	100	1.52	2.20 … 3.90	66.00	Normal	IPAK
AUIRL1404Z	Gen 10.2	3.10	160	0.75	1.40 … 2.70	75.00	Logic	TO-220
AUIRL1404ZL	Gen 10.2	3.10	160	0.75	1.40 … 2.70	75.00	Logic	TO-262
AUIRL1404ZS	Gen 10.2	3.10	160	0.75	1.40 … 2.70	75.00	Logic	TO-263-3 (D^2PAK)
IPD90N04S4-03	OptiMOS™-T2	3.20	90	1.60	2.00 … 4.00	51.00	Normal	TO252-3 (DPAK)
IPB80N04S4-03	OptiMOS™-T2	3.30	80	1.60	2.00 … 4.00	51.00	Normal	TO263-3-2
AUIRFS8403	Gen 12.7	3.30	100	1.52	2.20 … 3.90	62.00	Normal	TO-263-3 (D^2PAK)
AUIRFSL8403	Gen 12.7	3.30	100	1.52	2.20 … 3.90	62.00	Normal	TO-262
IPC90N04S5L-3R3	OptiMOS™-5	3.30	90	2.40	1.20 … 2.00	30.00	Logic	TDSON-8-33 SuperSO8 single
IPC90N04S5-3R6	OptiMOS™-5	3.60	90	2.40	2.20 … 3.40	24.50	Normal	TDSON-8-33 SuperSO8 single
IPB120N04S4-04	OptiMOS™-T2	3.60	120	1.90	2.00 … 4.00	42.00	Normal	TO263-3-2
IPI80N04S4-03	OptiMOS™-T2	3.70	80	1.60	2.00 … 4.00	51.00	Normal	TO262-3
IPP80N04S4-03	OptiMOS™-T2	3.70	80	1.60	2.00 … 4.00	51.00	Normal	TO220-3
AUIRF1404Z	Gen 10.2	3.70	160	0.75	2.00 … 4.00	100.00	Normal	TO-220
AUIRF1404ZL	Gen 10.2	3.70	160	0.75	2.00 … 4.00	100.00	Normal	TO-262
AUIRF1404ZS	Gen 10.2	3.70	160	0.75	2.00 … 4.00	100.00	Normal	TO-263-3 (D^2PAK)
IPD90N04S4L-04	OptiMOS™-T2	3.80	90	2.10	1.20 … 2.00	46.00	Logic	TO252-3 (DPAK)
IPB80N04S4L-04	OptiMOS™-T2	4.00	80	2.10	1.20 … 2.00	46.00	Logic	TO263-3-2
IPD90N04S4-04	OptiMOS™-T2	4.10	90	2.10	2.00 … 4.00	33.00	Normal	TO252-3 (DPAK)
IPB80N04S4-04	OptiMOS™-T2	4.20	80	2.10	2.00 … 4.00	33.00	Normal	TO263-3-2
IPC70N04S5L-4R2	OptiMOS™-5	4.20	70	3.00	1.20 … 2.00	22.00	Logic	TDSON-8-33 SuperSO8 single
AUIRFR8401	Gen 12.7	4.25	100	1.90	2.20 … 3.90	42.00	Normal	TO-252 (DPAK)
AUIRFU8401	Gen 12.7	4.25	100	1.90	2.20 … 3.90	42.00	Normal	IPAK
IPI80N04S4L-04	OptiMOS™-T2	4.30	80	2.10	1.20 … 2.00	46.00	Logic	TO262-3
IPP80N04S4L-04	OptiMOS™-T2	4.30	80	2.10	1.20 … 2.00	46.00	Logic	TO220-3
IPC70N04S5-4R6	OptiMOS™-5	4.60	70	3.00	2.20 … 3.40	18.20	Normal	TDSON-8-33 SuperSO8 single
IPI80N04S4-04	OptiMOS™-T2	4.60	80	2.10	2.00 … 4.00	33.00	Normal	TO262-3
IPP80N04S4-04	OptiMOS™-T2	4.60	80	2.10	2.00 … 4.00	33.00	Normal	TO220-3
IPZ40N04S5L-4R8	OptiMOS™-5	4.80	40	3.50	1.20 … 2.00	22.00	Logic	TSDSON-8
AUIRF7734M2	Gen 10.7	4.90	72	3.30	2.00 … 4.00	48.00	Normal	DirectFET™2-Medium
IPZ40N04S5-5R4	OptiMOS™-5	5.40	40	3.50	2.20 … 3.40	17.00	Normal	TSDSON-8
IPC50N04S5L-5R5	OptiMOS™-5	5.50	50	3.60	1.20 … 2.00	17.00	Logic	TDSON-8-33 SuperSO8 single
IPC50N04S5-5R8	OptiMOS™-5	5.80	50	3.60	1.20 … 2.00	13.00	Normal	TDSON-8-33 SuperSO8 single
AUIRFN8459	Gen 12.7	2 x 5.90	50	3.00	2.20 … 3.90	40.00	Normal	PQFN 5x6 dual
IPB70N04S4-06	OptiMOS™-T2	6.20	70	2.60	2.00 … 4.00	24.50	Normal	TO263-3-2
IPI70N04S4-06	OptiMOS™-T2	6.50	70	2.60	2.00 … 4.00	24.50	Normal	TO262-3
IPP70N04S4-06	OptiMOS™-T2	6.50	70	2.60	2.00 … 4.00	24.50	Normal	TO220-3
AUIRL7732S2	Gen 10.7	6.60	58	3.50	1.00 … 2.50	24.00	Logic	DirectFET™2 SC
AUIRF7732S2	Gen 10.7	6.95	55	3.70	2.00 … 4.00	30.00	Normal	DirectFET™2 SC
IPG20N04S4L-07A	OptiMOS™-T2	2 x 7.20	20	2.30	1.20 … 2.20	39.00	Logic	TDSON-8-10 SuperSO8 dual
IPD50N04S4L-08	OptiMOS™-T2	7.30	50	3.30	1.20 … 2.00	23.00	Logic	TO252-3 (DPAK)
IPZ40N04S5L-7R4	OptiMOS™-5	7.40	40	4.40	1.20 … 2.00	13.00	Logic	TSDSON-8
IPG20N04S4-08A	OptiMOS™-T2	2 x 7.50	20	2.30	2.00 … 4.00	28.00	Normal	TDSON-8-10 SuperSO8 dual
IPI45N04S4L-08	OptiMOS™-T2	7.60	45	3.30	1.20 … 2.00	23.00	Logic	TO262-3
IPP45N04S4L-08	OptiMOS™-T2	7.60	45	3.30	1.20 … 2.00	23.00	Logic	TO220-3
IPD50N04S4-08	OptiMOS™-T2	7.90	50	3.30	2.00 … 4.00	17.20	Normal	TO252-3 (DPAK)
IPG20N04S4L-08A	OptiMOS™-T2	2 x 8.10	20	2.80	1.20 … 2.20	30.00	Logic	TDSON-8-10 SuperSO8 dual
IPZ40N04S5-8R4	OptiMOS™-5	8.40	40	4.40	2.20 … 3.40	10.30	Normal	TSDSON-8
IPD50N04S4-10	OptiMOS™-T2	9.30	50	3.70	2.00 … 4.00	14.00	Normal	TO252-3 (DPAK)
IPG20N04S4L-11A	OptiMOS™-T2	2 x 11.60	20	3.70	1.20 … 2.20	20.00	Logic	TDSON-8-10 SuperSO8 dual
IPG20N04S4-12A	OptiMOS™-T2	2 x 12.20	20	3.70	2.00 … 4.00	14.00	Normal	TDSON-8-10 SuperSO8 dual

1) See packages on page 134 to 136

Downloaded from Arrow.com.

55 V (Trench)



Product name	Technology	$R_{DS(on)}$ @ 10 V [mΩ]	I_D [A]	R_{thJC} (max) [K/W]	$V_{GS(th)}$ (min–max) [V]	Q_G (typ) [nC]	Normal/ logic level	Package[1]
AUIRF3805L-7P	Gen 10.2	2.60	160	0.50	2.00 … 4.00	130	Normal	TO-263CA 7 pin
AUIRF3805S-7P	Gen 10.2	2.60	160	0.50	2.00 … 4.00	130	Normal	TO-263-7 (D^2PAK 7-leg)
AUIRF3805	Gen 10.2	3.30	160	0.50	2.00 … 4.00	190	Normal	TO-220
AUIRF3805L	Gen 10.2	3.30	160	0.50	2.00 … 4.00	190	Normal	TO-262
AUIRF1405ZL	Gen 10.2	4.90	150	0.65	2.00 … 4.00	120	Normal	TO-262
AUIRF1405ZS	Gen 10.2	4.90	150	0.65	2.00 … 4.00	120	Normal	TO-263-3 (D^2PAK)
AUIRF1405ZS-7P	Gen 10.2	4.90	120	0.65	2.00 … 4.00	150	Normal	TO-263-7 (D^2PAK 7-leg)
AUIRF3205Z	Gen 10.2	6.50	75	0.90	2.00 … 4.00	76	Normal	TO-220
AUIRFR48Z	Gen 10.2	11.00	42	1.64	2.00 … 4.00	40	Normal	TO-252 (DPAK)
AUIRFR2905Z	Gen 10.2	14.50	42	1.38	2.00 … 4.00	29	Normal	TO-252 (DPAK)
AUIRFR4105Z	Gen 10.2	24.50	30	3.12	2.00 … 4.00	18	Normal	TO-252 (DPAK)
AUIRLL024Z	Gen 10.2	60.00	5	n/a	2.00 … 4.00	7	Normal	SOT-223

60 V (Trench)



Product name	Technology	$R_{DS(on)}$ @ 10 V [mΩ]	I_D [A]	R_{thJC} (max) [K/W]	$V_{GS(th)}$ (min–max) [V]	Q_G (typ) [nC]	Normal/ logic level	Package[1]
AUIRF7749L2	Gen 10.7	1.50	345	0.50	2.00 … 4.00	183.00	Normal	DirectFET™2 L8
IPB180N06S4-H1	OptiMOS™-T2	1.70	180	0.60	2.00 … 4.00	208.00	Normal	TO263-7-3
AUIRLS3036-7P	Gen 10.7	1.90	240	0.40	1.00 … 2.50	110.00	Logic	TO-263-7 (D^2PAK 7-leg)
IPB120N06S4-H1	OptiMOS™-T2	2.00	120	0.60	2.00 … 4.00	208.00	Normal	TO263-3-2
IPB120N06S4-02	OptiMOS™-T2	2.40	120	0.80	2.00 … 4.00	150.00	Normal	TO263-3-2
IPP120N06S4-H1	OptiMOS™-T2	2.40	120	0.60	2.00 … 4.00	208.00	Normal	TO220-3
AUIRLS3036	Gen 10.7	2.40	195	0.40	1.00 … 2.50	91.00	Logic	TO-263-3 (D^2PAK)
IPB120N06S4-03	OptiMOS™-T2	2.80	120	0.90	2.00 … 4.00	125.00	Normal	TO263-3-2
IPI120N06S4-02	OptiMOS™-T2	2.80	120	0.80	2.00 … 4.00	150.00	Normal	TO262-3
IPB90N06S4L-04	OptiMOS™-T2	3.40	90	1.00	1.20 … 2.20	133.00	Logic	TO263-3-2
IPI90N06S4L-04	OptiMOS™-T2	3.40	90	1.00	1.20 … 2.20	133.00	Logic	TO262-3
IPD100N06S4-03	OptiMOS™-T2	3.50	100	1.00	2.00 … 4.00	99.00	Normal	TO252-3 (DPAK)
IPD90N06S4L-03	OptiMOS™-T2	3.50	90	1.00	1.20 … 2.00	133.00	Logic	TO252-3 (DPAK)
IPB90N06S4-04	OptiMOS™-T2	3.70	90	1.00	1.20 … 2.20	99.00	Normal	TO263-3-2
IPD90N06S4-04	OptiMOS™-T2	3.80	90	1.00	2.00 … 4.00	99.00	Normal	TO252-3 (DPAK)
IPI90N06S4-04	OptiMOS™-T2	4.00	90	1.00	2.00 … 4.00	99.00	Normal	TO262-3
AUIRFS3306	Gen 10.7	4.20	120	0.65	2.00 … 4.00	85.00	Normal	TO-263-3 (D^2PAK)
IPD90N06S4L-05	OptiMOS™-T2	4.60	90	1.40	1.20 … 2.20	83.00	Logic	TO252-3 (DPAK)
IPB80N06S4L-05	OptiMOS™-T2	4.80	80	1.40	1.20 … 2.20	83.00	Logic	TO263-3-2
IPD90N06S4-05	OptiMOS™-T2	5.10	90	1.40	2.00… 4.00	62.00	Normal	TO252-3 (DPAK)
IPB80N06S4-05	OptiMOS™-T2	5.40	80	1.40	2.00 … 4.00	62.00	Normal	TO263-3-2
IPI80N06S4-05	OptiMOS™-T2	5.40	80	1.40	2.00 … 4.00	62.00	Normal	TO262-3
IPD90N06S4L-06	OptiMOS™-T2	6.30	90	1.90	1.20 … 2.20	58.00	Logic	TO252-3 (DPAK)
IPB80N06S4L-07	OptiMOS™-T2	6.40	80	1.90	1.20 … 2.20	58.00	Logic	TO263-3-2
IPI80N06S4L-07	OptiMOS™-T2	6.40	80	1.90	1.20 … 2.20	58.00	Logic	TO262-3
IPD90N06S4-07	OptiMOS™-T2	6.90	90	1.90	2.00 … 4.00	43.00	Normal	TO252-3 (DPAK)
AUIRF7648M2	Gen 10.7	7.00	68	2.40	3.00 … 4.90	35.00	Normal	DirectFET™2 M4
IPB80N06S4-07	OptiMOS™-T2	7.10	80	1.90	2.00 … 4.00	43.00	Normal	TO263-3-2
IPI80N06S4-07	OptiMOS™-T2	7.40	80	1.90	2.00 … 4.00	43.00	Normal	TO262-3
IPD50N06S4L-08	OptiMOS™-T2	7.80	50	2.10	1.20 … 2.20	49.00	Logic	TO252-3 (DPAK)
IPB45N06S4L-08	OptiMOS™-T2	7.90	45	2.10	1.20 … 2.20	49.00	Logic	TO263-3-2

1) See packages on page 134 to 136

www.infineon.com/automotivemosfet

Downloaded from Arrow.com.

Automotive N-Channel MOSFETs

60 V (Trench) (cont'd)



Product name	Technology	$R_{DS(on)}$ @ 10 V [mΩ]	I_D [A]	R_{thJC} (max) [K/W]	$V_{GS(th)}$ (min–max) [V]	Q_G (typ) [nC]	Normal/ logic level	Package[1]
IPI45N06S4L-08	OptiMOS™-T2	8.20	45	2.10	1.20 … 2.20	49.00	Logic	TO262-3
AUIRF1010EZS	Gen 10.2	8.50	75	1.11	2.00 … 4.00	58.00	Normal	TO-263-3 (D^2PAK)
IPD50N06S4-09	OptiMOS™-T2	9.00	50	2.10	2.00 … 4.00	36.00	Normal	TO252-3 (DPAK)
IPI45N06S4-09	OptiMOS™-T2	9.40	45	2.10	2.00 … 4.00	36.00	Normal	TO262-3
IPP45N06S4-09	OptiMOS™-T2	9.40	45	2.10	2.00 … 4.00	36.00	Normal	TO220-3
IPG20N06S4L-11	OptiMOS™-T2	2 x 11.20	20	2.30	1.20 … 2.20	41.00	Logic	TDSON-8-4 SuperSO8 dual
IPG20N06S4L-11A	OptiMOS™-T2	2 x 11.20	20	2.30	1.20 … 2.20	41.00	Logic	TDSON-8-10 SuperSO8 dual
IPD50N06S4L-12	OptiMOS™-T2	12.00	50	3.00	1.20 … 2.20	30.00	Logic	TO252-3 (DPAK)
IPG20N06S4L-14	OptiMOS™-T2	2 x 13.70	20	3.00	1.20 … 2.20	30.00	Logic	TDSON-8-4 SuperSO8 dual
IPG20N06S4L-14A	OptiMOS™-T2	2 x 13.70	20	3.00	1.20 … 2.20	30.00	Logic	TDSON-8-10 SuperSO8 dual
IPG20N06S4-15	OptiMOS™-T2	2 x 15.50	20	3.00	2.00 … 4.00	22.00	Normal	TDSON-8-4 SuperSO8 dual
IPG20N06S4-15A	OptiMOS™-T2	2 x 15.50	20	3.00	2.00 … 4.00	22.00	Normal	TDSON-8-10 SuperSO8 dual
AUIRFR3806	Gen 10.7	15.80	43	2.12	2.00 … 4.00	22.00	Normal	TO-252 (DPAK)
IPD30N06S4L-23	OptiMOS™-T2	23.00	30	4.20	1.20 … 2.20	16.10	Logic	TO252-3 (DPAK)
IPG20N06S4L-26	OptiMOS™-T2	2 x 26.00	20	4.50	1.20 … 2.20	15.00	Logic	TDSON-8-4 SuperSO8 dual
IPG20N06S4L-26A	OptiMOS™-T2	2 x 26.00	20	4.50	1.20 … 2.20	15.00	Logic	TDSON-8-10 SuperSO8 dual
IPD25N06S4L-30	OptiMOS™-T2	30.00	25	5.10	1.20 … 2.20	12.50	Logic	TO252-3 (DPAK)
AUIRF7640S2	Gen 10.7	36.00	21	5.00	3.00 … 5.00	7.30	Normal	DirectFET™2 SB

75 V (Trench)



Product name	Technology	$R_{DS(on)}$ @ 10 V [mΩ]	I_D [A]	R_{thJC} (max) [K/W]	$V_{GS(th)}$ (min–max) [V]	Q_G (typ) [nC]	Normal/ logic level	Package[1]
AUIRF7759L2	Gen 10.7	2.30	160	1.20	2.00 … 4.00	200	Normal	DirectFET™2 L8
AUIRFS3107	Gen 10.7	3.00	195	0.40	2.00 … 4.00	160	Normal	TO-263-3 (D^2PAK)
IPP80N08S4-06	OptiMOS™-T2	5.50	80	1.00	2.00 … 4.00	70	Normal	TO220-3
AUIRFN7107	Gen 10.7	8.50	76	1.20	2.00 … 4.00	52	Normal	PQFN 5x6 mm

1) See packages on page 134 to 136

Downloaded from Arrow.com.

80 V (Trench)



Product name	Technology	$R_{DS(on)}$ @ 10 V [mΩ]	I_D [A]	R_{thJC} (max) [K/W]	$V_{GS(th)}$ (min–max) [V]	Q_G (typ) [nC]	Normal/ logic level	Package[1]
IAUT300N08S5N012	OptiMOS™-5	1.20	300	0.40	2.20 … 3.80	178	Normal	HSOF-8 (HPSOF-8)
IPB180N08S4-02	OptiMOS™-T2	2.20	180	0.54	2.00 … 4.00	167	Normal	TO263-7-3
IPB120N08S4-03	OptiMOS™-T2	2.50	120	0.54	2.00 … 4.00	167	Normal	TO263-3-2
IPI120N08S4-03	OptiMOS™-T2	2.50	120	0.54	2.00 … 4.00	167	Normal	TO262-3
IPP120N08S4-03	OptiMOS™-T2	2.50	120	0.54	2.00 … 4.00	167	Normal	TO220-3
IAUT165N08S5N029	OptiMOS™-5	2.90	165	0.90	2.20 … 3.80	70	Normal	HSOF-8 (HPSOF-8)
IPB160N08S4-03	OptiMOS™-T2	3.20	160	0.72	2.00 … 4.00	112	Normal	TO263-7-3
IPB120N08S4-04	OptiMOS™-T2	4.10	120	0.84	2.00 … 4.00	95	Normal	TO263-3-2
IPI120N08S4-04	OptiMOS™-T2	4.10	120	0.84	2.00 … 4.00	95	Normal	TO262-3
IPP120N08S4-04	OptiMOS™-T2	4.10	120	0.84	2.00 … 4.00	95	Normal	TO220-3
IPB140N08S4-04	OptiMOS™-T2	4.20	140	0.90	2.00 … 4.00	80	Normal	TO263-7-3
IPP80N07S4-05	OptiMOS™-T2	5.20	80	1.00	2.00 … 4.00	69	Normal	TO220-3
IPD90N08S4-05	OptiMOS™-T2	5.30	90	1.00	2.00 … 4.00	68	Normal	TO252-3 (DPAK)
IPB80N08S4-06	OptiMOS™-T2	5.50	80	1.00	2.00 … 4.00	70	Normal	TO263-3-2
IPI80N08S4-06	OptiMOS™-T2	5.50	80	1.00	2.00 … 4.00	70	Normal	TO262-3
IPD50N08S4-13	OptiMOS™-T2	13.20	50	2.10	2.00 … 4.00	30	Normal	TO252-3 (DPAK)

100 V (Trench)



Product name	Technology	$R_{DS(on)}$ @ 10 V [mΩ]	I_D [A]	R_{thJC} (max) [K/W]	$V_{GS(th)}$ (min–max) [V]	Q_G (typ) [nC]	Normal/ logic level	Package[1]
IAUT300N10S5N015	OptiMOS™-5	1.50	300	0.40	2.20 … 3.80	166.00	Normal	HSOF-8 (HPSOF-8)
IPB180N10S4-02	OptiMOS™-T2	2.50	180	0.50	2.00 … 3.50	156.00	Normal	TO263-7-3
IPB180N10S4-03	OptiMOS™-T2	3.30	180	0.60	2.00 … 3.50	108.00	Normal	TO263-7-3
IAUT150N10S5N035	OptiMOS™-5	3.50	150	0.90	2.20 … 3.80	67.00	Normal	HSOF-8 (HPSOF-8)
IPB120N10S4-03	OptiMOS™-T2	3.50	120	0.60	2.00 … 3.50	108.00	Normal	TO263-3-2
IPI120N10S4-03	OptiMOS™-T2	3.50	120	0.60	2.00 … 3.50	108.00	Normal	TO262-3
IPP120N10S4-03	OptiMOS™-T2	3.50	120	0.60	2.00 … 3.50	108.00	Normal	TO220-3
AUIRF7769L2	Gen 10.7	3.50	124	1.20	2.00 … 4.00	200.00	Normal	DirectFET™2 L8
AUIRLS4030-7P	Gen 10.7	3.90	190	0.40	1.00 … 2.50	93.00	Logic	TO-263-7 (D^2PAK 7-leg)
AUIRLS4030	Gen 10.7	4.30	180	0.40	1.00 … 2.50	87.00	Logic	TO-263-3 (D^2PAK)
AUIRF7669L2	Gen 10.7	4.40	114	1.20	3.00 … 5.00	81.00	Normal	DirectFET™2 L8
AUIRFP4110	Gen 10.7	4.50	120	0.40	2.00 … 4.00	150.00	Normal	TO-247
IPB120N10S4-05	OptiMOS™-T2	5.00	120	0.80	2.00 … 3.50	70.00	Normal	TO263-3-2
IPI120N10S4-05	OptiMOS™-T2	5.00	120	0.80	2.00 … 3.50	70.00	Normal	TO262-3
IPP120N10S4-05	OptiMOS™-T2	5.00	120	0.80	2.00 … 3.50	70.00	Normal	TO220-3
AUIRFS4310Z	Gen 10.7	6.00	120	0.60	2.00 … 4.00	120.00	Normal	TO-263-3 (D^2PAK)
IPD90N10S4L-06	OptiMOS™-T2	6.60	90	1.10	1.10 … 2.10	75.00	Logic	TO252-3 (DPAK)
IPD90N10S4-06	OptiMOS™-T2	6.70	90	1.10	2.00 … 3.50	52.00	Normal	TO252-3 (DPAK)
AUIRFS4310	Gen 10.2	7.00	75	0.50	2.00 … 4.00	170.00	Normal	TO-263-3 (D^2PAK)
AUIRFB4410	Gen 10.2	10.00	75	0.61	2.00 … 4.00	120.00	Normal	TO-220
AUIRL7766M2	Gen 10.7	10.00	51	2.40	1.00 … 2.50	44.00	Logic	DirectFET™2 M4
IPB70N10S3-12	OptiMOS™-T	11.30	70	1.20	2.00 … 4.00	51.00	Normal	TO263-3-2
IPI70N10S3-12	OptiMOS™-T	11.60	70	1.20	2.00 … 4.00	51.00	Normal	TO262-3
IPD60N10S4L-12	OptiMOS™-T2	12.00	60	1.60	1.10 … 2.10	38.00	Logic	TO252-3 (DPAK)
IPP70N10S3L-12	OptiMOS™-T	12.10	70	1.20	1.20 … 2.40	60.00	Logic	TO220-3
IPD60N10S4-12	OptiMOS™-T2	12.20	60	1.60	2.00 … 3.50	26.00	Normal	TO252-3 (DPAK)
AUIRFB4610	Gen 10.2	14.00	73	0.77	2.00 … 4.00	90.00	Normal	TO-220
AUIRFN7110	Gen 10.7	14.50	58	1.20	2.00 … 4.00	49.00	Normal	PQFN 5x6 mm

1) See packages on page 134 to 136

www.infineon.com/automotivemosfet

Downloaded from Arrow.com.

Automotive N-Channel MOSFETs

100 V (Trench) (cont'd)



Product name	Technology	$R_{DS(on)}$ @ 10 V [mΩ]	I_D [A]	R_{thJC} (max) [K/W]	$V_{GS(th)}$ (min–max) [V]	Q_G (typ) [nC]	Normal/ logic level	Package[1]
IPB50N10S3L-16	OptiMOS™-T	15.40	70	1.50	1.20 … 2.40	49.00	Logic	TO263-3-2
IPI50N10S3L-16	OptiMOS™-T	15.70	50	1.50	1.20 … 2.40	49.00	Logic	TO262-3
IPP50N10S3L-16	OptiMOS™-T	15.70	50	1.50	1.20 … 2.40	49.00	Logic	TO220-3
AUIRF3710ZS	Gen 10.2	18.00	59	0.92	2.00 … 4.00	82.00	Normal	TO-263-3 (D^2PAK)
IPG20N10S4L-22A	OptiMOS™-T2	2 x 22.00	20	2.50	1.10 … 2.10	21.00	Logic	TDSON-8-10 SuperSO8 dual
IPD35N10S3L-26	OptiMOS™-T	24.00	35	2.10	1.20 … 2.40	39.00	Logic	TO252-3 (DPAK)
AUIRF540ZS	Gen 10.2	26.50	36	1.64	2.00 … 4.00	42.00	Normal	TO-263-3 (D^2PAK)
AUIRFR540Z	Gen 10.2	26.50	36	1.64	2.00 … 4.00	42.00	Normal	TO-252 (DPAK)
AUIRF540Z	Gen 10.2	26.50	36	1.64	2.00 … 4.00	43.00	Normal	TO-220
IPD30N10S3L-34	OptiMOS™-T	31.00	30	2.60	1.20 … 2.40	24.00	Logic	TO252-3 (DPAK)
AUIRF7647S2	Gen 10.7	31.00	24	3.70	3.00 … 5.00	14.00	Normal	DirectFET™2 SC
IPG20N10S4L-35A	OptiMOS™-T2	2 x 35.00	20	3.50	1.10 … 2.10	13.40	Logic	TDSON-8-10 SuperSO8 dual
IPG20N10S4-36A	OptiMOS™-T2	2 x 36.00	20	3.50	2.00 … 3.50	9.40	Normal	TDSON-8-10 SuperSO8 dual
IPG16N10S4-61A	OptiMOS™-T2	2 x 61.00	16	5.20	2.00 … 3.50	5.40	Normal	TDSON-8-10 SuperSO8 dual
IPG16N10S4L-61A	OptiMOS™-T2	2 x 61.00	16	5.20	1.10 … 2.10	8.50	Logic	TDSON-8-10 SuperSO8 dual
AUIRF7665S2	Gen 10.7	62.00	14	5.00	3.00 … 5.00	8.00	Normal	DirectFET™2 SB
AUIRFU120Z	Gen 10.2	190.00	9	4.28	2.00 … 4.00	7.00	Normal	IPAK

120 V (Trench)



Product name	Technology	$R_{DS(on)}$ @ 10 V [mΩ]	I_D [A]	R_{thJC} (max) [K/W]	$V_{GS(th)}$ (min–max) [V]	Q_G (typ) [nC]	Normal/ logic level	Package[1]
IPB100N12S3-05	OptiMOS™-T	4.80	100	0.50	2.00 … 4.00	139	Normal	TO263-3
IPI100N12S3-05	OptiMOS™-T	5.10	100	0.50	2.00 … 4.00	139	Normal	TO262-3
IPP100N12S3-05	OptiMOS™-T	5.10	100	0.50	2.00 … 4.00	139	Normal	TO220-3
IPD70N12S3-11	OptiMOS™-T	11.10	70	1.20	2.00 … 4.00	51	Normal	TO252-3 (DPAK)
IPI70N12S3-11	OptiMOS™-T	11.30	70	1.20	2.00 … 4.00	51	Normal	TO262-3
IPP70N12S3-11	OptiMOS™-T	11.30	70	1.20	2.00 … 4.00	51	Normal	TO220-3
IPB70N12S3-11	OptiMOS™-T	11.30	70	1.20	2.00 … 4.00	51	Normal	TO263-3
IPD70N12S3L-12	OptiMOS™-T	11.50	70	1.20	1.20 … 2.40	59	Logic	TO252-3 (DPAK)
IPI70N12S3L-12	OptiMOS™-T	11.80	70	1.20	1.20 … 2.40	59	Logic	TO262-3
IPP70N12S3L-12	OptiMOS™-T	11.80	70	1.20	1.20 … 2.40	59	Logic	TO220-3
IPB70N12S3L-12	OptiMOS™-T	11.80	70	1.20	1.20 … 2.40	59	Logic	TO263-3
IPD50N12S3L-15	OptiMOS™-T	15.00	50	1.50	1.20 … 2.40	44	Logic	TO252-3 (DPAK)
IPI50N12S3L-15	OptiMOS™-T	15.40	50	1.50	1.20 … 2.40	44	Logic	TO262-3
IPP50N12S3L-15	OptiMOS™-T	15.40	50	1.50	1.20 … 2.40	44	Logic	TO220-3
IPB50N12S3L-15	OptiMOS™-T	15.40	50	1.50	1.20 … 2.40	44	Logic	TO263-3
IPD35N12S3L-24	OptiMOS™-T	24.00	35	2.10	1.20 … 2.40	30	Logic	TO252-3 (DPAK)
IPB35N12S3L-26	OptiMOS™-T	26.30	35	2.10	1.20 … 2.40	30	Logic	TO263-3
IPD30N12S3L-31	OptiMOS™-T	31.00	30	2.60	1.20 … 2.40	24	Logic	TO252-3 (DPAK)

1) See packages on page 134 to 136

Downloaded from Arrow.com.

150 V (Trench)



Product name	Technology	$R_{DS(on)}$ @ 10 V [mΩ]	I_D [A]	R_{thJC} (max) [K/W]	$V_{GS(th)}$ (min–max) [V]	Q_G (typ) [nC]	Normal/ logic level	Package[1]
AUIRFP4568	Gen 10.7	5.90	171	0.29	3.00 … 5.00	151	Normal	TO-247
AUIRFS4115-7P	Gen 10.7	11.80	105	0.40	3.00 … 5.00	73	Normal	TO-263-7 (D^2PAK 7-leg)
AUIRFS4115	Gen 10.7	12.10	99	0.40	3.00 … 5.00	77	Normal	TO-263-3 (D^2PAK)
AUIRFR4615	Gen 10.7	42.00	33	1.05	3.00 … 5.00	26	Normal	TO-252 (DPAK)
AUIRF7675M2	Gen 10.7	56.00	18	3.30	3.00 … 5.00	21	Normal	DirectFET™2 M2

200 V (Trench)



Product name	Technology	$R_{DS(on)}$ @ 10 V [mΩ]	I_D [A]	R_{thJC} (max) [K/W]	$V_{GS(th)}$ (min–max) [V]	Q_G (typ) [nC]	Normal/ logic level	Package[1]
AUIRFR4620	Gen 10.7	78	24	1.05	3.00 … 5.00	25	Normal	TO-252 (DPAK)

250 V (Trench)



Product name	Technology	$R_{DS(on)}$ @ 10 V [mΩ]	I_D [A]	R_{thJC} (max) [K/W]	$V_{GS(th)}$ (min–max) [V]	Q_G (typ) [nC]	Normal/ logic level	Package[1]
IPB64N25S3-20	OptiMOS™ T	20	64.00	0.50	2.00 … 4.00	67	Normal	TO263-3-2
AUIRF7799L2	Gen 10.7	32	35.00	1.20	3.00 … 5.00	110	Normal	DirectFET™2 L8
IPB17N25S3-100	OptiMOS™ T	100	17.00	1.40	2.00 … 4.00	14	Normal	TO263-3-2
IPP17N25S3-100	OptiMOS™ T	100	17.00	1.40	2.00 … 4.00	14	Normal	TO220-3
AUIRFR4292	Gen 10.7	345	9.30	1.50	3.00 … 5.00	13	Normal	TO-252 (DPAK)
IPD5N25S3-430	OptiMOS™-T	430	5.00	3.70	2.00 … 4.00	5	Normal	TO252-3 (DPAK)

300 V (Trench)



Product name	Technology	$R_{DS(on)}$ @ 10 V [mΩ]	I_D [A]	R_{thJC} (max) [K/W]	$V_{GS(th)}$ (min–max) [V]	Q_G (typ) [nC]	Normal/ logic level	Package[1]
AUIRFP4409	Gen 10.7	69	38	0.44	3.00 … 5.00	83	Normal	TO-247
AUIRFS6535	Gen 10.7	185	19	0.71	3.00 … 5.00	38	Normal	TO-263-3 (D^2PAK)
AUIRFSL6535	Gen 10.7	185	19	0.71	3.00 … 5.00	38	Normal	TO-262

1) See packages on page 134 to 136

Downloaded from Arrow.com.

Automotive N-Channel MOSFETs

30 V (Planar)



Product name	Technology	$R_{DS(on)}$ @ 10 V [mΩ]	I_D [A]	R_{thJC} (max) [K/W]	$V_{GS(th)}$ (min–max) [V]	Q_G (typ) [nC]	Normal/ logic level	Package[1]
IPD50N03S2L-06	OptiMOS™	6.40	50.00	1.10	1.20 … 2.00	50	Logic	TO252-3 (DPAK)
AUIRL2203N	Gen 7	7.00	75.00	0.85	1.00 … 3.00	60	Logic	TO-220
IPD50N03S2-07	OptiMOS™	7.30	50.00	1.10	2.10 … 4.00	52	Normal	TO252-3 (DPAK)
IPD30N03S2L-10	OptiMOS™	10.00	30.00	1.50	1.20 … 2.00	31	Logic	TO252-3 (DPAK)
AUIRF7805Q	Gen 5	11.00	13.00	20.00	1.00 … 3.00	11	Logic	SO-8 (DSO-8)
IPD30N03S2L-20	OptiMOS™	20.00	30.00	2.50	1.20 … 2.00	14	Logic	TO252-3 (DPAK)
AUIRF7313Q	Gen 5	2 x 29.00	7.00	20.00	1.00 … 3.00	22	Logic	SO-8 (DSO-8)
AUIRF7303Q	Gen 5	2 x 50.00	4.90	20.00	1.00 … 3.00	14	Logic	SO-8 (DSO-8)

40 V (Planar)



Product name	Technology	$R_{DS(on)}$ @ 10 V [mΩ]	I_D [A]	R_{thJC} (max) [K/W]	$V_{GS(th)}$ (min–max) [V]	Q_G (typ) [nC]	Normal/ logic level	Package[1]
IPB160N04S2L-03	OptiMOS™	2.70	160	0.50	1.20 … 2.00	230	Logic	TO263-7-3
IPB160N04S2-03	OptiMOS™	2.90	160	0.50	2.10 … 4.00	123	Normal	TO263-7-3
IPB100N04S2-04	OptiMOS™	3.30	100	0.50	2.10 … 4.00	172	Normal	TO263-3-2
IPB80N04S2-04	OptiMOS™	3.40	80	0.50	2.10 … 4.00	127	Normal	TO263-3-2
IPB80N04S2-H4	OptiMOS™	3.70	80	0.50	1.20 … 2.00	103	Normal	TO263-3-2
IPI80N04S2-04	OptiMOS™	3.70	80	0.50	2.10 … 4.00	170	Normal	TO262-3
AUIRL1404S	Gen 7	4.00	75	0.75	1.00 … 3.00	93	Logic	TO-263-3 (D^2PAK)
IPI80N04S2-H4	OptiMOS™	4.00	80	0.50	2.10 … 4.00	148	Normal	TO262-3
AUIRF1404S	Gen 7	4.00	75	0.75	2.00 … 4.00	131	Normal	TO-263-3 (D^2PAK)
AUIRF1404	Gen 7	4.00	75	0.75	2.00 … 4.00	131	Normal	TO-220
AUIRFR3504	Gen 7	9.20	87	1.09	2.00 … 4.00	48	Normal	TO-252 (DPAK)
AUIRF3504	Gen 7	9.20	87	1.09	2.00 … 4.00	48	Normal	TO-220
AUIRF7484Q	Gen 7	10.00	14	20.00	1.00 … 2.00	69	Logic	SO-8 (DSO-8)

50 V (Planar)



Product name	Technology	$R_{DS(on)}$ @ 10 V [mΩ]	I_D [A]	R_{thJC} (max) [K/W]	$V_{GS(th)}$ (min–max) [V]	Q_G (typ) [nC]	Normal/ logic level	Package[1]
AUIRF7103Q	Gen 5	2 x 130	3	20.00	1.00 … 3.00	10	Logic	SO-8 (DSO-8)

55 V (Planar)



Product name	Technology	$R_{DS(on)}$ @ 10 V [mΩ]	I_D [A]	R_{thJC} (max) [K/W]	$V_{GS(th)}$ (min–max) [V]	Q_G (typ) [nC]	Normal/ logic level	Package[1]
IPB100N06S2L-05	OptiMOS™	4.40	100	0.50	1.20 … 2.00	170.00	Logic	TO263-3-2
IPB100N06S2-05	OptiMOS™	4.70	100	0.50	2.10 … 4.00	130.00	Normal	TO263-3-2
IPB80N06S2L-H5	OptiMOS™	4.70	80	0.50	1.20 … 2.00	145.00	Logic	TO263-3-2
IPP100N06S2L-05	OptiMOS™	4.70	100	0.50	1.20 … 2.00	170.00	Logic	TO220-3
AUIRF2805	Gen 7	4.70	75	0.45	2.00 … 4.00	150.00	Normal	TO-220
IPB80N06S2-05	OptiMOS™	4.80	80	0.50	2.10 … 4.00	130.00	Normal	TO263-3-2
IPI80N06S2L-05	OptiMOS™	4.80	80	0.50	1.20 … 2.00	170.00	Logic	TO262-3
IPP80N06S2L-H5	OptiMOS™	5.00	80	0.50	1.20 … 2.00	145.00	Logic	TO220-3
AUIRFBA1405	Gen 5	5.00	174	0.45	2.00 … 4.00	170.00	Normal	TO-220
IPB80N06S2-H5	OptiMOS™	5.20	80	0.50	2.10 … 4.00	116.00	Normal	TO263-3-2
AUIRF1405	Gen 7	5.30	75	0.45	2.00 … 4.00	170.00	Normal	TO-220
AUIRFP1405	Gen 7	5.30	95	0.49	2.00 … 4.00	120.00	Normal	TO-247
IPP80N06S2-H5	OptiMOS™	5.50	80	0.50	2.10 … 4.00	116.00	Normal	TO220-3

1) See packages on page 134 to 136

Downloaded from Arrow.com.

55 V (Planar) (cont'd)



Product name	Technology	$R_{DS(on)}$ @ 10 V [mΩ]	I_D [A]	R_{thJC} (max) [K/W]	$V_{GS(th)}$ (min–max) [V]	Q_G (typ) [nC]	Normal/ logic level	Package[1]
IPB80N06S2L-06	OptiMOS™	6.00	80	0.60	1.20 … 2.00	114.00	Logic	TO263-3-2
IPB80N06S2-07	OptiMOS™	6.30	80	0.60	2.10 … 4.00	86.00	Normal	TO263-3-2
IPI80N06S2-07	OptiMOS™	6.60	80	0.60	2.10 … 4.00	86.00	Normal	TO262-3
IPP80N06S2-07	OptiMOS™	6.60	80	0.60	2.10 … 4.00	86.00	Normal	TO220-3
IPB80N06S2L-07	OptiMOS™	6.70	80	0.70	1.20 … 2.00	95.00	Logic	TO263-3-2
IPP80N06S2L-07	OptiMOS™	7.00	80	0.70	1.20 … 2.00	95.00	Logic	TO220-3
IPB80N06S2-08	OptiMOS™	7.70	80	0.70	2.10 … 4.00	72.00	Normal	TO263-3-2
IPI80N06S2-08	OptiMOS™	8.00	80	0.70	2.10 … 4.00	72.00	Normal	TO262-3
AUIRF3205	Gen 5	8.00	75	0.75	2.00 … 4.00	97.00	Normal	TO-220
AUIRF3305	Gen 5	8.00	140	0.45	2.00 … 4.00	100.00	Normal	TO-220
AUIRFP064N	Gen 5	8.00	110	0.75	2.00 … 4.00	113.00	Normal	TO-247
IPB80N06S2L-09	OptiMOS™	8.20	80	0.80	1.20 … 2.00	82.00	Logic	TO263-3-2
IPP80N06S2L-09	OptiMOS™	8.50	80	0.80	1.20 … 2.00	82.00	Logic	TO220-3
IPB80N06S2-09	OptiMOS™	8.80	80	0.80	2.10 … 4.00	60.00	Normal	TO263-3-2
IPP80N06S2-09	OptiMOS™	9.10	80	0.80	2.10 … 4.00	60.00	Normal	TO220-3
IPP80N06S2L-09	OptiMOS™	11.00	80	0.95	1.20 … 2.00	62.00	Logic	TO220-3
IPB77N06S2-12	OptiMOS™	11.70	77	0.95	2.10 … 4.00	45.00	Normal	TO263-3-2
IPP77N06S2-12	OptiMOS™	12.00	77	0.95	2.10 … 4.00	45.00	Normal	TO220-3
IPD50N06S2L-13	OptiMOS™	12.70	50	1.10	1.20 … 2.00	52.00	Logic	TO252-3 (DPAK)
IPD30N06S2L-13	OptiMOS™	13.00	30	1.10	1.20 … 2.00	52.00	Logic	TO252-3 (DPAK)
AUIRFZ48N	Gen 7	14.00	64	0.95	2.00 … 4.00	54.00	Normal	TO-220
IPD50N06S2-14	OptiMOS™	14.40	50	1.10	2.10 … 4.00	39.00	Normal	TO252-3 (DPAK)
IPD30N06S2-15	OptiMOS™	14.70	30	1.10	1.20 … 2.00	39.00	Normal	TO252-3 (DPAK)
AUIRFZ46NL	Gen 7	16.50	39	1.40	2.00 … 4.00	48.00	Normal	TO-262
AUIRFZ44N	Gen 7	17.50	49	1.50	2.00 … 4.00	42.00	Normal	TO-220
IPD30N06S2L-23	OptiMOS™	23.00	30	1.50	1.20 … 2.00	33.00	Logic	TO252-3 (DPAK)
IPD30N06S2-23	OptiMOS™	23.00	30	1.50	2.10 … 4.00	25.00	Normal	TO252-3 (DPAK)
AUIRLR2905	Gen 5	27.00	42	1.40	1.00 … 2.00	36.00	Logic	TO-252 (DPAK)
BSP603S2L	OptiMOS™	33.00	5.2	20.00	1.20 … 2.00	31.00	Logic	SOT223
IPD26N06S2L-35	OptiMOS™	35.00	30	2.20	1.20 … 2.00	10.00	Logic	TO252-3 (DPAK)
IPG20N06S2L-35	OptiMOS™	2 x 35.00	20	2.30	1.20 … 2.20	18.00	Logic	TDSON-8-4 SuperSO8 dual
IPG20N06S2L-35A	OptiMOS™	2 x 35.00	20	2.30	1.20 … 2.20	18.00	Logic	TDSON-8-10 SuperSO8 dual
IPD25N06S2-40	OptiMOS™	40.00	29	2.20	2.10 … 4.00	14.00	Normal	TO252-3 (DPAK)
AUIRFIZ34N	Gen 5	40.00	21	4.10	2.00 … 4.00	23.00	Normal	TO-220 FullPak
AUIRFZ34N	Gen 5	40.00	29	2.20	2.00 … 4.00	23.00	Normal	TO-220
AUIRLL2705	Gen 5	40.00	5	120.00	1.00 … 3.00	32.00	Logic	SOT-223
AUIRF7341Q	Gen 5	2 x 50.00	5.1	20.00	1.00 … 3.00	29.00	Logic	SO-8 (DSO-8)
IPG20N06S2L-50	OptiMOS™	2 x 50.00	20	2.90	1.20 … 2.20	12.40	Logic	TDSON-8-4 SuperSO8 dual
IPG20N06S2L-50A	OptiMOS™	2 x 50.00	20	2.90	1.20 … 2.20	12.40	Logic	TDSON-8-10 SuperSO8 dual
AUIRLZ24NS	Gen 5	60.00	18	3.30	1.00 … 2.00	7.00	Logic	TO-263-3 (D^2PAK)
IPD15N06S2L-64	OptiMOS™	64.00	19	3.20	1.20 … 2.00	11.00	Logic	TO252-3 (DPAK)
AUIRLL024N	Gen 5	65.00	4	120.00	1.00 … 2.00	7.00	Logic	SOT-223
AUIRLR024N	Gen 5	65.00	17	3.30	1.00 … 2.00	10.00	Logic	TO-252 (DPAK)
IPG20N06S2L-65	OptiMOS™	2 x 65.00	20	3.50	1.20 … 2.20	10.00	Logic	TDSON-8-4 SuperSO8 dual
IPG20N06S2L-65A	OptiMOS™	2 x 65.00	20	3.50	1.20 … 2.20	10.00	Logic	TDSON-8-10 SuperSO8 dual
AUIRFZ24NS	Gen 5	70.00	17	3.30	2.00 … 4.00	13.00	Normal	TO-263-3 (D^2PAK)
AUIRFL024N	Gen 5	75.00	3	120.00	2.00 … 4.00	12.00	Normal	SOT-223
IPD14N06S2-80	OptiMOS™	80.00	17	3.20	2.10 … 4.00	8.00	Normal	TO252-3 (DPAK)
AUIRLL014N	Gen 5	140.00	3	120.00	1.00 … 2.00	10.00	Logic	SOT-223
AUIRLR014N	Gen 5	140.00	10	5.30	1.00 … 3.00	5.00	Logic	TO-252 (DPAK)
AUIRFL014N	Gen 5	160.00	2	120.00	2.00 … 4.00	7.00	Normal	SOT-223

1) See packages on page 134 to 136

www.infineon.com/automotivemosfet

Downloaded from Arrow.com.

Automotive N-Channel MOSFETs

60 V (Planar)



Product name	Technology	$R_{DS(on)}$ @ 10 V [mΩ]	I_D [A]	R_{thJC} (max) [K/W]	$V_{GS(th)}$ (min–max) [V]	Q_G (typ) [nC]	Normal/ logic level	Package[1]
AUIRF7478Q	Gen 7	26	7	20	1.00 … 3.00	21	Logic	SO-8 (DSO-8)

75 V (Planar)



Product name	Technology	$R_{DS(on)}$ @ 10 V [mΩ]	I_D [A]	R_{thJC} (max) [K/W]	$V_{GS(th)}$ (min–max) [V]	Q_G (typ) [nC]	Normal/ logic level	Package[1]
AUIRFP2907	Gen 7	4.50	90	0.32	2.00 … 4.00	410	Normal	TO-247
IPB100N08S2L-07	OptiMOS™	6.50	100	0.50	1.20 … 2.00	185	Logic	TO263-3-2
IPB100N08S2-07	OptiMOS™	6.80	100	0.50	2.10 … 4.00	153	Normal	TO263-3-2
IPB80N08S2L-07	OptiMOS™	6.80	80	0.50	1.20 … 2.00	186	Logic	TO263-3-2
IPP100N08S2L-07	OptiMOS™	6.80	100	0.50	1.20 … 2.00	182	Logic	TO220-3
IPB80N08S2-07	OptiMOS™	7.10	80	0.50	2.10 … 4.00	182	Normal	TO263-3-2
IPP100N08S2-07	OptiMOS™	7.10	100	0.50	2.10 … 4.00	144	Normal	TO220-3
IPI100N08S2-07	OptiMOS™	7.10	100	0.50	2.10 … 4.00	144	Normal	TO262-3
IPP80N08S2L-07	OptiMOS™	7.10	80	0.50	1.20 … 2.00	183	Logic	TO220-3
IPI80N08S2-07	OptiMOS™	7.40	80	0.50	2.10 … 4.00	144	Normal	TO262-3
AUIRF3007	Gen 7	12.60	75	0.74	2.00 … 4.00	89	Normal	TO-220
AUIRF2807	Gen 7	13.00	75	0.65	2.00 … 4.00	107	Normal	TO-220
IPD30N08S2L-21	OptiMOS™	20.50	30	1.10	1.20 … 2.00	43	Logic	TO252-3 (DPAK)
IPD30N08S2-22	OptiMOS™	21.50	30	1.10	2.10 … 4.00	44	Normal	TO252-3 (DPAK)
IPD22N08S2L-50	OptiMOS™	50.00	22	2.00	1.20 … 2.00	21	Logic	TO252-3 (DPAK)

100 V (Planar)



Product name	Technology	$R_{DS(on)}$ @ 10 V [mΩ]	I_D [A]	R_{thJC} (max) [K/W]	$V_{GS(th)}$ (min–max) [V]	Q_G (typ) [nC]	Normal/ logic level	Package[1]
AUIRLR3410	Gen 5	105	15	1.90	1.00 … 2.00	23	Logic	TO-252 (DPAK)
AUIRLR120N	Gen 5	185	11	3.10	1.00 … 2.00	13	Logic	TO-252 (DPAK)

150 V (Planar)



Product name	Technology	$R_{DS(on)}$ @ 10 V [mΩ]	I_D [A]	R_{thJC} (max) [K/W]	$V_{GS(th)}$ (min–max) [V]	Q_G (typ) [nC]	Normal/ logic level	Package[1]
AUIRF3415	Gen 5	42	43	0.75	2.00 … 4.00	133	Normal	TO-220
AUIRF3315S	Gen 5	82	21	1.60	2.00 … 4.00	63	Normal	TO-263-3 (D^2PAK)

1) See packages on page 134 to 136

Downloaded from Arrow.com.

Automotive P-Channel MOSFETs

30 V (Trench)



Product name	Technology	$R_{DS(on)}$ @ 10 V [mΩ]	I_D [A]	R_{thJC} (max) [K/W]	$V_{GS(th)}$ (min–max) [V]	Q_G (typ) [nC]	Normal/ logic level	Package[1]
IPB80P03P4L-04	OptiMOS™-P2	4.10	-80	1.10	-2.00 … -1.00	125	Logic	TO263-3-2
IPP80P03P4L-04	OptiMOS™-P2	4.40	-80	1.10	-2.00 … -1.00	125	Logic	TO220-3
IPD90P03P4L-04	OptiMOS™-P2	4.50	-90	1.10	-2.00 … -1.00	100	Logic	TO252-3 (DPAK)
IPD90P03P4-04	OptiMOS™-P2	4.50	-90	1.10	-4.00 … -2.00	100	Normal	TO252-3 (DPAK)
IPB80P03P4-05	OptiMOS™-P2	4.70	-80	1.10	-4.00 … -2.00	100	Normal	TO263-3-2
IPD80P03P4L-07	OptiMOS™-P2	6.80	-80	1.70	-2.00 … -1.00	80	Logic	TO252-3 (DPAK)
IPB80P03P4L-07	OptiMOS™-P2	6.90	-80	1.70	-2.00 … -1.00	63	Logic	TO263-3-2
IPD50P03P4L-11	OptiMOS™-P2	10.50	-50	2.60	-2.00 … -1.00	42	Logic	TO252-3 (DPAK)
IPB45P03P4L-11	OptiMOS™-P2	10.80	-45	2.60	-2.00 … -1.00	42	Logic	TO263-3-2

40 V (Trench)



Product name	Technology	$R_{DS(on)}$ @ 10 V [mΩ]	I_D [A]	R_{thJC} (max) [K/W]	$V_{GS(th)}$ (min–max) [V]	Q_G (typ) [nC]	Normal/ logic level	Package[1]
IPB180P04P4L-02	OptiMOS™-P2	2.40	-100	1.00	-2.20 … -1.70	220	Logic	TO263-7-3
IPB180P04P4-03	OptiMOS™-P2	2.80	-100	1.00	-4.00 … -2.00	190	Normal	TO263-7-3
IPB120P04P4L-03	OptiMOS™-P2	3.00	-120	1.10	-2.20 … -1.70	180	Logic	TO263-3-2
IPP120P04P4L-03	OptiMOS™-P2	3.40	-120	1.10	-2.20 … -1.70	180	Logic	TO220-3
IPB120P04P4-04	OptiMOS™-P2	3.60	-120	1.10	-4.00 … -2.00	158	Normal	TO263-3-2
IPB80P04P4L-04	OptiMOS™-P2	4.20	-90	1.20	-2.20 … -1.70	135	Logic	TO263-3-2
IPD90P04P4L-04	OptiMOS™-P2	4.30	-90	1.20	-2.20 … -1.70	135	Logic	TO252-3 (DPAK)
IPD90P04P4-05	OptiMOS™-P2	4.70	-90	1.20	-4.00 … -2.00	118	Normal	TO252-3 (DPAK)
IPB80P04P4-05	OptiMOS™-P2	4.90	-80	1.20	-4.00 … -2.00	118	Normal	TO263-3-2
IPB80P04P4L-06	OptiMOS™-P2	6.40	-80	1.70	-2.20 … -1.70	71	Logic	TO263-3-2
IPD85P04P4L-06	OptiMOS™-P2	6.40	-85	1.70	-2.20 … -1.70	80	Logic	TO252-3 (DPAK)
IPB80P04P4-07	OptiMOS™-P2	7.30	-80	1.70	-4.00 … -2.00	71	Normal	TO263-3-2
IPD85P04P4-07	OptiMOS™-P2	7.30	-85	1.70	-4.00 … -2.00	69	Normal	TO252-3 (DPAK)
IPD70P04P4L-08	OptiMOS™-P2	7.80	-70	2.00	-2.20 … -1.70	63	Logic	TO252-3 (DPAK)
IPD70P04P4-09	OptiMOS™-P2	8.90	-70	2.00	-4.00 … -2.00	54	Normal	TO252-3 (DPAK)
IPB70P04P4-09	OptiMOS™-P2	9.30	-70	2.00	-4.00 … -2.00	54	Normal	TO263-3-2
IPD50P04P4L-11	OptiMOS™-P2	10.60	-50	2.60	-2.20 … -1.70	45	Logic	TO252-3 (DPAK)
IPD50P04P4-13	OptiMOS™-P2	12.60	-50	2.60	-4.00 … -2.00	39	Normal	TO252-3 (DPAK)

1) See packages on page 134 to 136

Downloaded from Arrow.com.

Automotive P-Channel MOSFETs

20 V (Planar)

Product name	Technology	$R_{DS(on)}$ @ 10 V [mΩ]	I_D [A]	R_{thJC} (max) [K/W]	$V_{GS(th)}$ (min–max) [V]	Q_G (typ) [nC]	Normal/ logic level	Package[1]
AUIRF7207Q	Gen 5	60	-5.00	n/a	-1.60 … -0.70	15	Logic	SO-8 (DSO-8)
AUIRF7304Q	Gen 5	2 x 90	-4.30	n/a	-1.60 … -0.70	15	Logic	SO-8 (DSO-8)

30 V (Planar)

Product name	Technology	$R_{DS(on)}$ @ 10 V [mΩ]	I_D [A]	R_{thJC} (max) [K/W]	$V_{GS(th)}$ (min–max) [V]	Q_G (typ) [nC]	Normal/ logic level	Package[1]
AUIRF7416Q	Gen 5	20	-10.00	n/a	-2.00 … -1.00	61	Logic	SO-8 (DSO-8)
AUIRF7316Q	Gen 5	2 x 58	-4.90	n/a	-3.00 … -1.00	23	Logic	SO-8 (DSO-8)

55 V (Planar)

Product name	Technology	$R_{DS(on)}$ @ 10 V [mΩ]	I_D [A]	R_{thJC} (max) [K/W]	$V_{GS(th)}$ (min–max) [V]	Q_G (typ) [nC]	Normal/ logic level	Package[1]
AUIRF4905	Gen 5	20	-74.00	0.75	-4.00 … -2.00	120	Normal	TO-220
AUIRF4905L	Gen 5	20	-74.00	0.75	-4.00 … -2.00	120	Normal	TO-262
AUIRF4905S	Gen 5	20	-74.00	0.75	-4.00 … -2.00	120	Normal	TO-263-3 (D^2PAK)
AUIRFR5305	Gen 5	65	-28.00	1.40	-4.00 … -2.00	42	Normal	TO-252 (DPAK)
AUIRF9Z34N	Gen 5	100	-17.00	2.20	-4.00 … -2.00	23	Normal	TO-220
AUIRF7342Q	Gen 5	2 x 105	-3.40	n/a	-3.00 … -1.00	26	Logic	SO-8 (DSO-8)
AUIRFR5505	Gen 5	110	-18.00	2.20	-4.00 … -2.00	21	Normal	TO-252 (DPAK)
AUIRFR9024N	Gen 5	175	-11.00	3.30	-4.00 … -2.00	13	Normal	TO-252 (DPAK)

100 V (Planar)

Product name	Technology	$R_{DS(on)}$ @ 10 V [mΩ]	I_D [A]	R_{thJC} (max) [K/W]	$V_{GS(th)}$ (min–max) [V]	Q_G (typ) [nC]	Normal/ logic level	Package[1]
AUIRF5210S	Gen 5	60	-38	0.75	-4.00 … -2.00	150	Normal	TO-263-3 (D^2PAK)
AUIRF9540N	Gen 5	117	-23	1.10	-4.00 … -2.00	65	Normal	TO-220
AUIRFR5410	Gen 5	205	-13	1.90	-4.00 … -2.00	39	Normal	TO-252 (DPAK)

150 V (Planar)

Product name	Technology	$R_{DS(on)}$ @ 10 V [mΩ]	I_D [A]	R_{thJC} (max) [K/W]	$V_{GS(th)}$ (min–max) [V]	Q_G (typ) [nC]	Normal/ logic level	Package[1]
AUIRF6218S	Gen 5	150	-27	0.61	-5.00 … -3.00	71	Normal	TO-263-3 (D^2PAK)
AUIRF6215S	Gen 5	290	-13	1.40	-4.00 … -2.00	44	Normal	TO-263-3 (D^2PAK)
AUIRF6215	Gen 5	290	-13	1.40	-4.00 … -2.00	44	Normal	TO-220
AUIRFR6215	Gen 5	295	-13	1.40	-4.00 … -2.00	44	Normal	TO-252 (DPAK)

1) See packages on page 134 to 136

Downloaded from Arrow.com.

Automotive N+P-Channel MOSFETs

30 V (Planar)

Product name	Technology	$R_{DS(on)}$ @ 10 V [mΩ]	I_D [A]	$V_{GS(th)}$ (min–max) [V]	Q_G (typ) [nC]	Normal/ logic level	Package[1)]
AUIRF7319Q	Gen 5	29/58	5.80/-4.90	1.00 … 3.00	22.00/23.00	Logic	SO-8 (DSO-8)
AUIRF7379Q	Gen 5	45/90	5.80/-4.30	1.00 … 3.00	25.00/25.00	Logic	SO-8 (DSO-8)
AUIRF7309Q	Gen 5	50/100	4.70/-3.50	1.00 … 3.00	25.00/25.00	Logic	SO-8 (DSO-8)
AUIRF9952Q	Gen 5	100/250	3.50/-2.30	1.00 … 3.00	6.90/6.10	Logic	SO-8 (DSO-8)

55 V (Planar)

Product name	Technology	$R_{DS(on)}$ @ 10 V [mΩ]	I_D [A]	$V_{GS(th)}$ (min–max) [V]	Q_G (typ) [nC]	Normal/ logic level	Package[1)]
AUIRF7343Q	Gen 5	50/105	4.70/-3.40	1.00 … 3.00	24/26	Logic	SO-8 (DSO-8)

1) See packages on page 134 to 136

www.infineon.com/automotivemosfet

Downloaded from Arrow.com.

Small Signal MOSFETs

Infineon offers a full range of Small Signal MOSFETs qualified according AEC-Q101.

The portfolio includes

- Polarity: N-Channel enhancement, N-Channel depletion and P-Channel MOSFETs
- Voltage classes: -250 … 800 V
- V_{GS} rating: 10 V (normal level), 4.5 V (logic level), 2.5 V (super logic level), 1.8 V (ultra logic level)
- Packages: SOT223, SOT89, TSOP-6 (single and dual), SC59, SOT23, SOT323, SOT363 (single and dual)
- Configuration: single, dual, complementary (n+p pairs)
- Additional features: the products with names ending with “E” have an Integrated ESD protection

SC59 is an enhanced version of the SOT23: it’s footprint compatible with SOT23, but allows a bigger chip inside, therefore a lower $R_{DS(on)}$.

Naming system

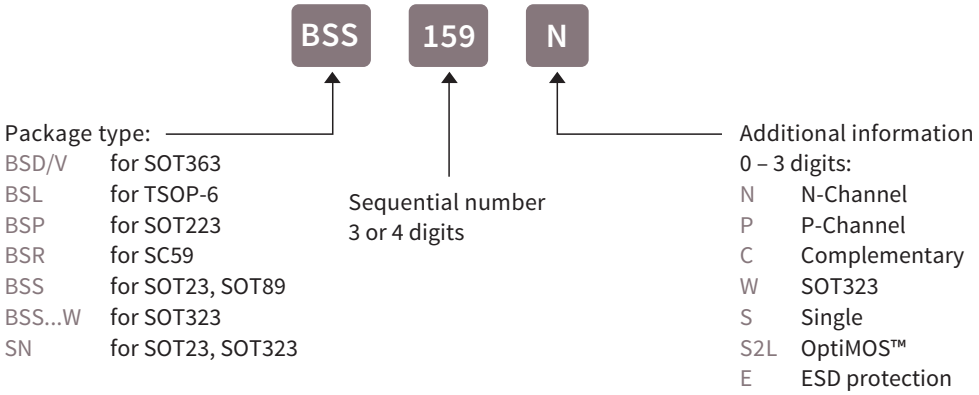

www.infineon.com/smallsignalmosfets
www.infineon.com/complementary
www.infineon.com/pchannel
www.infineon.com/depletion

Downloaded from Arrow.com.

N-Channel MOSFETs

Voltage	Product name	$R_{DS(on)}$ @ 10 V [mΩ]	I_D [A]	$V_{GS(th)}$ (min–max) [V]	Q_G (typ) [nC]	Technology	Package[1]
20 V	BSR202N	21[2]	3.80	0.70 … 1.20	5.80	OptiMOS™2	SC59
	BSL802SN	22[3]	7.50	0.30 … 0.75	4.70	OptiMOS™2	TSOP-6/6
	BSL202SN	22[2]	7.50	0.70 … 1.20	5.80	OptiMOS™2	TSOP-6/6
	BSR802N	23[3]	3.70	0.30 … 0.75	4.70	OptiMOS™2	SC59
	BSL205N	50[2]	2.50	0.70 … 1.20	2.10	OptiMOS™2	TSOP-6/6 dual
	BSS205N	50[2]	2.50	0.70 … 1.20	2.10	OptiMOS™2	SOT23
	BSL806N	57[3]	2.30	0.30 … 0.75	1.70	OptiMOS™2	TSOP-6/6 dual
	BSS806N	57[3]	2.30	0.30 … 0.75	1.70	OptiMOS™2	SOT23
	BSL207N	70[2]	2.10	0.70 … 1.20	2.10	OptiMOS™2	TSOP-6/6 dual
	BSL214N	140[2]	1.50	0.70 … 1.20	0.80	OptiMOS™2	TSOP-6/6 dual
	BSS214N	140[2]	1.50	0.70 … 1.20	0.80	OptiMOS™2	SOT23
	BSS214NW	140[2]	1.50	0.70 … 1.20	0.80	OptiMOS™2	SOT323
	BSD214SN	140[2]	1.50	0.70 … 1.20	0.80	OptiMOS™2	SOT363
	BSS816NW	160[3]	1.40	0.30 … 0.75	0.60	OptiMOS™2	SOT323
	BSD816SN	160[3]	1.40	0.30 … 0.95	0.60	OptiMOS™2	SOT363
	BSD235N	350[2]	0.95	0.70 … 1.20	0.32	OptiMOS™2	SOT363 dual
	BSD840N	400[3]	0.88	0.30 … 0.75	0.26	OptiMOS™2	SOT363 dual
30 V	BSR302N	23	3.70	1.20 … 2.00	4.40	OptiMOS™2	SC59
	BSL302SN	25	7.10	1.20 … 2.00	4.40	OptiMOS™2	TSOP-6/6
	BSL306N	57	2.30	1.20 … 2.00	1.60	OptiMOS™2	TSOP-6/6 dual
	BSS306N	57	2.30	1.20 … 2.00	1.50	OptiMOS™2	SOT23
	BSS316N	160	1.40	1.20 … 2.00	0.60	OptiMOS™2	SOT23
	BSD316SN	160	1.40	1.20 … 2.00	0.60	OptiMOS™2	SOT363
55 V	BSS670S2L	650	0.54	1.20 … 2.00	1.70	OptiMOS™	SOT23
60 V	BSS606N	60	3.20	1.30 … 2.30	3.70	OptiMOS™3	SOT89
	BSL606SN	60	4.50	1.30 … 2.30	3.70	OptiMOS™3	TSOP-6/6
	BSR606N	60	2.30	1.30 … 2.30	3.70	OptiMOS™3	SC59
	BSP318S	90	2.60	1.20 … 2.00	14.00	SIPMOS™	SOT223
	BSP320S	120	2.90	2.10 … 4.00	9.70	SIPMOS™	SOT223
	BSP295	300	1.80	0.80 … 1.80	14.00	SIPMOS™	SOT223
	2N7002DW	3000	0.30	1.50 … 2.50	0.40	OptiMOS™	SOT363 dual
	BSS138N	3500	0.23	0.60 … 1.40	1.00	SIPMOS™	SOT23
	BSS138W	3500	0.28	0.60 … 1.40	1.00	SIPMOS™	SOT223
	SN7002N	5000	0.20	0.80 … 1.80	1.00	SIPMOS™	SOT23
	BSS7728N	5000	0.20	1.30 … 2.30	1.00	SIPMOS™	SOT23
	SN7002W	5000	0.23	0.80 … 1.80	1.00	SIPMOS™	SOT323
100 V	BSL372SN	220	2.00	0.80 … 1.80	9.50	OptiMOS™	TSOP-6/6
	BSP372N	230	1.80	0.80 … 1.80	9.50	OptiMOS™	SOT223
	BSL373SN	230	2.00	2.10 … 4.00	6.20	OptiMOS™	TSOP-6/6
	BSP373N	240	1.80	2.10 … 4.00	6.20	OptiMOS™	SOT223
	BSL296SN	460	1.40	0.80 … 1.80	2.70	OptiMOS™	TSOP-6/6
	BSP296N	600	1.20	0.80 … 1.80	4.50	OptiMOS™	SOT223
	BSS123N	6000	0.19	0.80 … 1.80	0.60	OptiMOS™	SOT23
	BSS119N	6000	0.19	1.30 … 2.30	0.60	OptiMOS™	SOT23
200 V	BSP297	1800	0.66	0.80 … 1.80	12.90	SIPMOS™	SOT223
240 V	BSP89	6000	0.35	0.80 … 1.80	4.30	SIPMOS™	SOT223
	BSP88	6000	0.35	0.60 … 1.40	4.50	SIPMOS™	SOT223
	BSS87	6000	0.26	0.80 … 1.80	3.70	SIPMOS™	SOT89
	BSS131	14,000	0.11	0.80 … 1.80	2.10	SIPMOS™	SOT23
400 V	BSP298	3000	0.50	2.10 … 4.00	–	SIPMOS™	SOT223
	BSP324	25,000	0.17	1.30 … 2.30	4.50	SIPMOS™	SOT223
500 V	BSP299	4000	0.40	2.10 … 4.00	–	SIPMOS™	SOT223

1) See packages on page 134 to 136
2) $R_{DS(on)}$ at 4.5 V 3) $R_{DS(on)}$ at 2.5 V

www.infineon.com/smallsignalmosfets
www.infineon.com/complementary
www.infineon.com/pchannel
www.infineon.com/depletion

Downloaded from Arrow.com.

Small Signal MOSFETs

N-Channel MOSFETs (cont'd)

Voltage	Product name	$R_{DS(on)}$ @ 10 V [mΩ]	I_D [A]	$V_{GS(th)}$ (min–max) [V]	Q_G (typ) [nC]	Technology	Package[1]
600 V	BSP125	45,000	0.120	1.30 … 2.30	4.40	SIPMOS™	SOT223
	BSS225	45,000	0.090	1.30 … 2.30	3.90	SIPMOS™	SOT89
	BSS127	500,000	0.021	1.40 … 2.60	1.40	SIPMOS™	SOT23
800 V	BSP300	20,000	0.190	2.00 … 4.00	–	SIPMOS™	SOT223

P-Channel MOSFETs

Voltage	Product name	$R_{DS(on)}$ @ 10 V [mΩ]	I_D [A]	$V_{GS(th)}$ (min–max) [V]	Q_G (typ) [nC]	Technology	Package[1]
-20 V	BSL207SP	41[2]	-6.00	-1.20 … -0.60	-13.30	OptiMOS™ P	TSOP-6/6
	BSL211SP	67[2]	-4.70	-1.20 … -0.60	-8.30	OptiMOS™ P	TSOP-6/6
	BSL215P	150[2]	-1.50	-1.20 … -0.60	-3.55	OptiMOS™ P2	TSOP-6/6 dual
	BSS215P	150[2]	-1.50	-1.20 … -0.50	-3.60	OptiMOS™ P2	SOT23
	BSV236SP	175[2]	-1.50	-1.20 … -0.60	-3.80	OptiMOS™ P	SOT363
	BSS209PW	550[2]	-0.63	-1.20 … -0.60	-1.00	OptiMOS™ P	SOT323
	BSS223PW	1,200[2]	-0.39	-1.20 … -0.60	-0.50	OptiMOS™ P	SOT323
	BSD223P	1,200[2]	-0.39	-1.20 … -0.60	-0.50	OptiMOS™ P	SOT363
-30 V	BSL303SPE	33	-6.30	-2.00 … -1.00	14.00	OptiMOS™ P3 + integrated ESD diode	TSOP-6/6
	BSL307SP	43	-5.50	-2.00 … -1.00	-23.40	OptiMOS™ P	TSOP-6/6 dual
	BSL305SPE	45	-5.30	-2.00 … -1.00	9.40		TSOP-6/6
	BSL308PE	80	-2.00	-2.00 … -1.00	-5.00	OptiMOS™ P3 + integrated ESD diode	TSOP-6/6 dual
	BSS308PE	80	-2.00	-2.00 … -1.00	-5.00	OptiMOS™ P3 + integrated ESD diode	SOT23
	BSL314PE	140	-1.50	-2.00 … -1.00	-2.90	OptiMOS™ P3 + integrated ESD diode	TSOP-6/6 dual
	BSS314PE	140	-1.50	-2.00 … -1.00	-2.90	OptiMOS™ P3 + integrated ESD diode	SOT23
	BSD314SPE	140	-1.50	-2.00 … -1.00	-2.90	OptiMOS™ P3 + integrated ESD diode	SOT363
	BSS315P	150	-1.50	-2.00 … -1.00	-2.30	OptiMOS™ P2	SOT23
-60 V	BSP613P	130	-2.90	-4.00 … -2.10	-22.00	SIPMOS™	SOT223
	BSP170P	300	-1.90	-4.00 … -2.10	-10.00	SIPMOS™	SOT223
-60 V	BSP171P	300	-1.90	-2.00 … -1.00	-13.00	SIPMOS™	SOT223
	BSP315P	800	-1.17	-2.00 … -1.00	-5.20	SIPMOS™	SOT223
	BSR315P	800	-0.62	-2.00 … -1.00	-4.00	SIPMOS™	SC59
	BSS83P	2000	-0.33	-2.00 … -1.00	-2.38	SIPMOS™	SOT23
	BSS84P	8000	-0.17	-2.00 … -1.00	-1.00	SIPMOS™	SOT23
	BSS84PW	8000	-0.15	-2.00 … -1.00	-1.00	SIPMOS™	SOT323
-100 V	BSP322P	800	-1.00	-2.00 … -1.00	-12.40	SIPMOS™	SOT223
	BSP321P	900	-0.98	-4.00… -2.10	-9.00	SIPMOS™	SOT223
	BSP316P	1800	-0.68	-2.00 … -1.00	-5.10	SIPMOS™	SOT223
	BSR316P	1800	-0.36	-2.00 … -1.00	-3.00	SIPMOS™	SC59

1) See packages on page 134 to 136
2) $R_{DS(on)}$ at 4.5 V

www.infineon.com/smallsignalmosfets
www.infineon.com/complementary
www.infineon.com/pchannel
www.infineon.com/depletion

Downloaded from Arrow.com.

P-Channel MOSFETs (cont'd)

Voltage	Product name	$R_{DS(on)}$ @ 10 V [mΩ]	I_D [A]	$V_{GS(th)}$ (min–max) [V]	Q_G (typ) [nC]	Technology	Package[1]
-250 V	BSR92P	11	-0.14	-2.00 … -1.00	-3.60	SIPMOS™	SC59
	BSP92P	12	-0.26	-2.00 … -1.00	-4.30	SIPMOS™	SOT223
	BSS192P	12	-0.19	-2.00 … -1.00	-4.90	SIPMOS™	SOT89
	BSP317P	4000	-0.43	-2.00 … -1.00	-11.60	SIPMOS™	SOT223

Complementary MOSFETs

Voltage	Product name	$R_{DS(on)}$ (max) @ V_{GS} = 10 V [mΩ]	I_D [A]	$V_{GS(th)}$ (min–max) [V]	Q_G (typ) [nC]	Technology	Package[1]
20 V	BSL215C/n-ch	140[2]	1.50	0.70 … 1.20	0.73	OptiMOS™2	TSOP-6/6
-20 V	BSL215C/p-ch	150[2]	-1.50	-1.20 … -0.60	-3.00	OptiMOS™ P2	TSOP-6/6
20 V	BSD235C/n-ch	350[2]	0.95	-1.20 … -0.60	0.34	OptiMOS™2	SOT363
-20 V	BSD235C/p-ch	1200[2]	-0.53	0.70 … 1.20	-0.40	OptiMOS™ P2	SOT363
20 V	BSZ15DC02KD/n-ch	55[2]	5.10	0.80 … 1.40	2.10	OptiMOS™2	TSDSON-8
-20 V	BSZ15DC02KD/p-ch	150[2]	-3.20	-1.40 … -0.70	-3.00	OptiMOS™ P2	TSDSON-8
30 V	BSL316C/n-ch	160	1.40	1.20 … 2.00	0.60	OptiMOS™2	TSOP-6/6
-30 V	BSL316C/p-ch	150	-1.50	-2.00 … -1.00	-2.40	OptiMOS™ P2	TSOP-6/6
30 V	BSL308C/n-ch	57	2.30	1.20 … 2.00	1.50	OptiMOS™2	TSOP-6/6
-30 V	BSL308C/p-ch	80	-2.00	-2.00 … -1.00	-5.00	OptiMOS™ P3	TSOP-6/6

Depletion MOSFETs

Voltage	Product name	$R_{DS(on)}$ (max) @ V_{GS} = 10 V [mΩ]	I_D [A]	Q_G (typ) [nC]	Technology	Package[1]
60 V	BSS159N	8,000	0.230	2.20	SIPMOS™	SOT23
100 V	BSS169	12,000	0.170	2.10	SIPMOS™	SOT23
200 V	BSP149	3,500	0.660	11.00	SIPMOS™	SOT223
240 V	BSP129	6,000	0.350	3.80	SIPMOS™	SOT223
250 V	BSS139	30,000	0.100	2.30	SIPMOS™	SOT23
400 V	BSP179	24,000	0.210	4.50	SIPMOS™	SOT223
600 V	BSP135	60,000	0.120	3.70	SIPMOS™	SOT223
	BSS126	700,000	0.021	1.40	SIPMOS™	SOT23

1) See packages on page 134 to 136
2) $R_{DS(on)}$ at 4.5 V

www.infineon.com/smallsignalmosfets
www.infineon.com/complementary
www.infineon.com/pchannel
www.infineon.com/depletion

Downloaded from Arrow.com.

600/650 V CoolMOS™ Power MOSFETs

600 V CoolMOS™ CPA and 650 V CoolMOS™ CFDA

Following the release of the first series of high-voltage automotive MOSFETs – the 600 V CoolMOS™ CPA series – Infineon has launched its second generation of market-leading, automotive-qualified, high-voltage MOSFETs, the 650 V CoolMOS™ CFDA series. Whereas the first generation of 600 V CoolMOS™ CPA series addresses the well-known attributes of high quality and reliability required by the automotive industry, the newer 650 V CoolMOS™ CFDA series also caters to special application needs with its integrated fast body diode. This fast body diode is the key for addressing resonant switching topologies, resulting in lower switching losses. The softer commutation behavior and consequent reduced EMI appearance gives the 650 V CoolMOS™ CFDA series a clear advantage in comparison with competitor parts. Furthermore, limited voltage overshoot during hard commutation of the body diode enables easier implementation of layout and design.

The basic 600 V CoolMOS™ CPA portfolio is complemented with the broad 650 V CoolMOS™ CFDA portfolio which provides all the benefits of a fast-switching Super-Junction MOSFET fulfilling the enhanced reliability requirements for automotive applications realized with special screening measures in front end and back end as well as the qualification compliant to AEC-Q100.

Therefore, the combination of both technologies – the 600 V CoolMOS™ CPA and the new 650 V CoolMOS™ CFDA technology – is the best choice for switching topologies in automotive applications.

Common key features CoolMOS™ "A"

- First 600 V/650 V automotive-qualified high-voltage technologies for the automotive market
- Compliant to AEC-Q101 standard

Key features 600 V CoolMOS™ CPA

- Lowest $R_{DS(on)}$ per package
- Lowest gate charge value Q_g

Key feature 650 V CoolMOS™ CFDA

- Limited voltage overshoot during hard commutation – self-limiting di/dt and dv/dt
- Low Q_{rr} at repetitive commutation on body diode and low C_{oss}

Applications 600 V CoolMOS™ CPA

- Hard switching topologies
- PFC boost stages in on-board charger
- Active clamp or 2-transistor forward in DC-DC converter

Application 650 V CoolMOS™ CFDA

- Resonant switching topologies
- LLC or full-bridge ZVS in DC-DC converter
- HID lamp

AEC Qualified

RoHS

Naming system

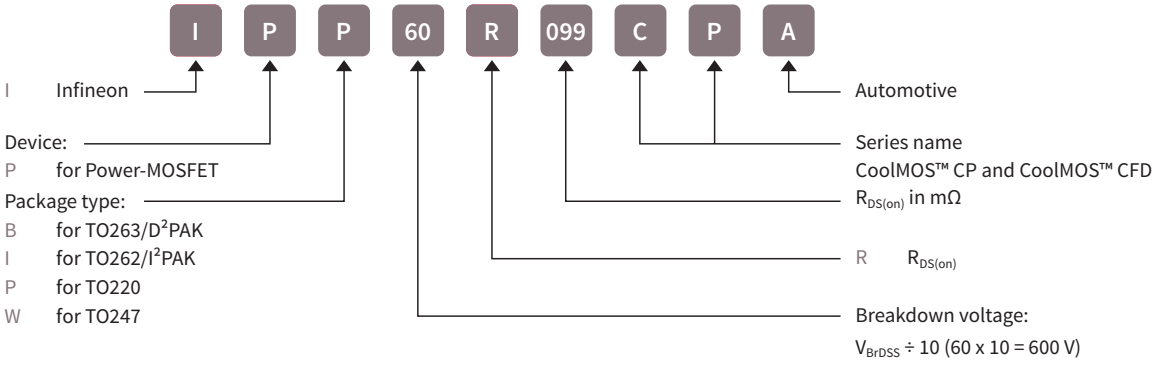

www.infineon.com/CFDA

Downloaded from Arrow.com.

Example for automotive topology using CoolMOS™ CFDA

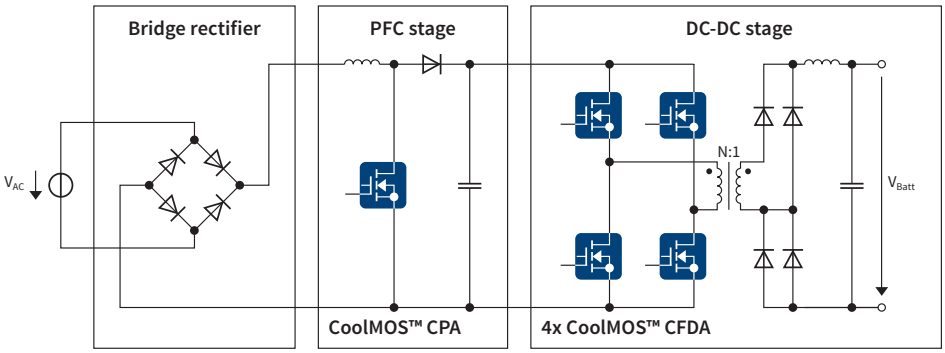

On-board battery charger with ZVS phase shifted topology

600 V CoolMOS™ CPA product portfolio

Product name	$R_{DS(on)}$ @ T_J = 25°C V_{GS} = 10 V [mΩ]	I_D (max) @ T_J = 25°C [A]	I_{Dpuls} (max) [A]	$V_{GS(th)}$ (min–max) [V]	Q_G (typ) [nC]	R_{thJC} (max) [K/W]	Package[1]
IPB60R099CPA	105	31	93	-20 … 20	60	0.50	TO263-3-2
IPB60R199CPA	199	16	51	-20 … 20	32	0.90	TO263-3-2
IPB60R299CPA	299	11	34	-20 … 20	22	1.30	TO263-3-2
IPP60R099CPA	105	31	93	-20 … 20	60	0.50	TO220-3
IPW60R045CPA	45	60	230	-20 … 10	150	0.29	TO247-3
IPW60R075CPA	75	39	130	-20 … 20	87	0.40	TO247-3
IPW60R099CPA	105	31	93	-20 … 20	60	0.50	TO247-3
IPI60R099CPA	105	31	93	-20 … 20	60	0.50	TO262-3

650 V CoolMOS™ CFDA product portfolio

Product name	$R_{DS(on)}$ @ T_J = 25°C V_{GS} = 10 V [mΩ]	I_D (max) @ T_J = 25°C [A]	I_{Dpuls} (max) [A]	$V_{GS(th)}$ (min–max) [V]	Q_G (typ) [nC]	R_{thJC} (max) [K/W]	Package[1]
IPD65R420CFDA	420	8.70	27.00	3.50 … 4.50	32	1.50	TO252-3 (DPAK)
IPD65R660CFDA	660	6.00	17.00	3.50 … 4.50	20	2.00	TO252-3 (DPAK)
IPB65R110CFDA	110	31.20	99.60	3.50 … 4.50	118	0.45	TO263-3-2
IPB65R150CFDA	150	22.40	72.00	3.50 … 4.50	86	0.64	TO263-3-2
IPB65R190CFDA	190	17.50	57.20	3.50 … 4.50	68	0.83	TO263-3-2
IPB65R310CFDA	310	11.40	34.40	3.50 … 4.50	41	1.20	TO263-3-2
IPB65R660CFDA	660	6.00	17.00	3.50 … 4.50	20	2.00	TO263-3-2
IPP65R110CFDA	110	31.20	99.60	3.50 … 4.50	118	0.45	TO220-3
IPP65R150CFDA	150	22.40	72.00	3.50 … 4.50	86	0.64	TO220-3
IPP65R190CFDA	190	17.50	57.20	3.50 … 4.50	68	0.83	TO220-3
IPP65R310CFDA	310	11.40	34.40	3.50 … 4.50	41	1.20	TO220-3
IPP65R660CFDA	660	6.00	17.00	3.50 … 4.50	20	2.00	TO220-3
IPW65R048CFDA	48	63.30	228.00	3.50 … 4.50	270	0.25	TO247-3
IPW65R080CFDA	80	43.30	127.00	3.50 … 4.50	161	0.32	TO247-3
IPW65R110CFDA	110	31.20	99.60	3.50 … 4.50	118	0.45	TO247-3
IPW65R150CFDA	150	22.40	72.00	3.50 … 4.50	86	0.64	TO247-3
IPW65R190CFDA	190	17.50	57.20	3.50 … 4.50	68	0.83	TO247-3

1) See packages on page 134 to 136

www.infineon.com/CFDA

Downloaded from Arrow.com.

IGBTs: discretes and modules

IGBT discretes

Infineon offers an extensive and dedicated range of automotive AEC-Q101-qualified IGBTs from 600 to 1200 V and up to 160 A. Specially designed for hybrid and electric vehicles, both the IGBT and diode are optimized to provide the best performance by application from low to ultra-high switching frequencies. Available in a wide variety of packages from D²PAK and TO-247 through to high-performance packages such as Super-TO-220 and Super-TO-247, the catalog has suitable packaging solutions to enable higher current handling or the realization of creepage requirements, as well as bench-mark system level performance.

Key applications

- Main and auxiliary inverters
- PFC
- DC-DC
- PTC heater

Key features

- 600 to 1200 V up to 160 A
- SMD and through-hole packages
- AEC-Q101 qualified
- Thorough final test routine implemented with dynamic testing

Key benefits

- Performance optimized by application
- Benchmark performance giving high system level efficiency
- Robust and reliable design

Inverter diagram

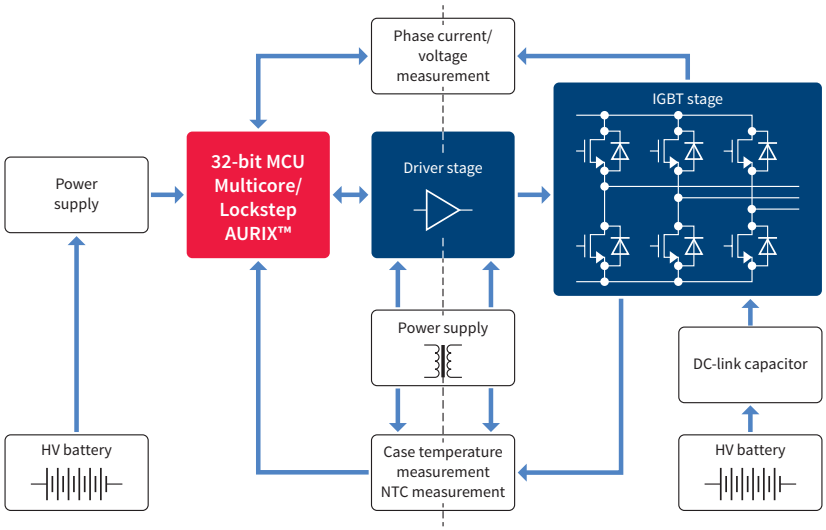

On-board charger

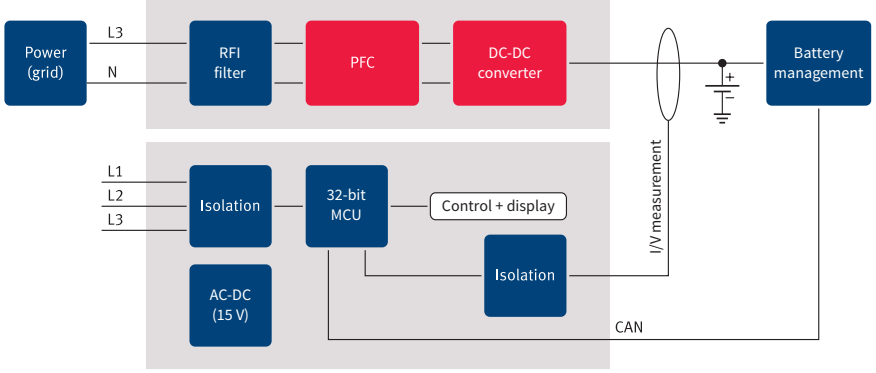

www.infineon.com/automotive-igbt

Downloaded from Arrow.com.

IGBT discretes

IGBT

Product name	V_{ces} [V]	I_c @ 100°C [A]	$V_{ce(on)}$ [V]	T_{sc} @ 150°C [µs]	E_{on} @ 25°C [µJ]	E_{off} @ 25°C [µJ]	V_f (typ) @ 25°C [V]	Package[1]
AIKD03N60RF	600	2.50	2.20	5	50	40	2.10	TO-252-3 (DPAK 3-leg)
AIKD04N60R	600	4.00	1.65	5	90	150	1.70	TO-252-3 (DPAK 3-leg)
AIKD04N60RF	600	4.00	2.20	5	60	50	2.10	TO-252-3 (DPAK 3-leg)
AIKD06N60R	600	6.00	1.65	5	110	220	1.70	TO-252-3 (DPAK 3-leg)
AIKD06N60RF	600	6.00	2.20	5	90	90	2.10	TO-252-3 (DPAK 3-leg)
AIKD10N60R	600	10.00	1.65	5	210	380	1.70	TO-252-3 (DPAK 3-leg)
AIKD10N60RF	600	10.00	2.20	5	190	160	2.10	TO-252-3 (DPAK 3-leg)
AUIRG4BC30U-S	600	12.00	1.95	–	160	200	–	TO-263-3 (D^2PAK 3-leg)
AIKD15N60R	600	15.00	1.65	5	370	530	1.70	TO-252-3 (DPAK 3-leg)
AIKD15N60RF	600	15.00	2.20	5	270	250	2.10	TO-252-3 (DPAK 3-leg)
AUIRG4BC30S-S	600	18.00	1.40	–	260	3450	–	TO-263-3 (D^2PAK 3-leg)
AIKB20N60CT	600	20.00	1.50	5	310	460	1.65	TO-263-3 (D^2PAK 3-leg)
AIKP20N60CT	600	20.00	1.50	5	310	460	1.65	TO-220
AIKW20N60CT	600	20.00	1.50	5	310	460	1.65	TO-247
AUIRGP4062D-E	600	24.00	1.60	5[2]	115	600	1.80	TO-247
AUIRG4PC40S-E	600	31.00	1.32	–	450	6500	–	TO-247
AIKW30N60CT	600	32.50	1.50	5	690	770	1.65	TO-247
AUIRGP35B60PD-E	600	34.00	1.85	–	220	215	1.30	TO-247
AUIRGS4062D1	600	39.00	1.57	5[2]	532	311	1.57	TO-263-3 (D^2PAK 3-leg)
AUIRGSL4062D1	600	39.00	1.57	5[2]	532	311	1.57	TO-262
AUIRGF65G40D0	600	41.00	1.80	5	298	147	1.70	TO-247
AUIRGP50B60PD1E	600	45.00	2.00	–	255	375	1.30	TO-247
AUIRGS30B60K	600	50.00	1.95	10	350	825	–	TO-263-3 (D^2PAK 3-leg)
AUIRGSL30B60K	600	50.00	1.95	10	350	825	–	TO-262
AIKW50N60CT	600	57.50	1.50	5	1200	1400	1.65	TO-247
AUIRGP4063D-E	600	60.00	1.60	5[2]	625	1275	1.95	TO-247
AIKW75N60CT	600	80.00	1.50	5	2000	2500	1.65	TO-247
AIKQ100N60CT	600	145.00	1.50	5	3100	2500	1.65	Super-TO-247
AIKQ120N60CT	600	155.00	1.50	5	4100	2800	1.65	Super-TO-247
AUIRGPS4070D0	600	160.00	1.70	6[2]	8200	2900	1.90	Super-TO-247
AIGW40N65F5	650	46.00	1.60	–	350	100	–	TO-247
AIGW40N65H5	650	46.00	1.66	–	360	110	–	TO-247
AIKW40N65DF5	650	46.00	1.60	–	350	100	1.55	TO-247
AIKW40N65DH5	650	46.00	1.66	–	380	120	1.55	TO-247
AIGW50N65F5	650	53.50	1.66	–	490	140	–	TO-247
AIGW50N65H5	650	53.50	1.66	–	450	160	–	TO-247
AIKW50N65DF5	650	53.50	1.66	–	490	140	1.54	TO-247
AIKW50N65DH5	650	53.50	1.66	–	450	160	1.54	TO-247
AUIRGDC0250	1200	81.00	1.37	–	–	29000	–	Super-TO-220 Reflow
AUIRG4PH50S	1200	81.00	1.47	–	–	29000	–	TO-247

1) See packages on page 134 to 136
2) T_{sc} at 25°C

www.infineon.com/automotive-igbt

Downloaded from Arrow.com.

IGBTs: discretes and modules

IGBT modules

Infineon's HybridPACK™ family extends across the full power spectrum required by IGBT modules in hybrid and electric vehicles. Various product versions in five different packages enable maximum scalability across voltage and power classes, from 200 A to 900 A and 400 V to 1200 V (nominal chip values). The HybridPACK™ modules feature half bridge and six-pack IGBTs and are specially designed and qualified for automotive applications. Enhanced versions of these power modules support a maximum junction temperature of 175°C for power peaks in excess of 160 kW.

HybridPACK™ DSC is a family of molded modules which offer increased power density due to double-sided cooling and integrated die temperature and current sensors. HybridPACK™ DSC modules can be stacked to offer a scalable solution to support customers' platform approach to inverter design.

The automotive Easy 1B and Easy 2B modules provide a platform for flexible topologies for applications with a power range of up to 6 kW. The automotive Easy module is based on the well-established industrial Easy module version. The availability of a high-voltage battery system in both HEVs and EVs facilitates increasing the efficiency and reducing the cost of some applications that are currently supplied by the low-voltage board-net (14 V) in IC engine vehicles.

HybridPACK™ and automotive Easy modules

HybridPACK™ 1 – power module for hybrid electric vehicle applications for a current range up to 400 A

Sales name	I_C [A]	V_{CES} [V]	Application	Topology	Product status	Packages[1)]
FS215R04A1E3D	215	400	Inverter	B6 bridge	Released	HybridPACK™ 1
FS400R07A1E3_S7	400	705	Inverter	B6 bridge	Released	HybridPACK™ 1
FS400R07A3E3	400	705	Inverter	B6 bridge	Released	HybridPACK™ 1 DC6
FS400R07A3E3_H6	400	650	Inverter	B6 bridge	Coming Q4/2017	HybridPACK™ 1 DC6 Direct

HybridPACK™ Light – power module for hybrid electric vehicle applications for a current range up to 200 A

Sales name	I_C [A]	V_{CES} [V]	Application	Topology	Product status	Packages[1)]
FS200R07A5E3_S6	200	705	Inverter	B6 bridge	Released	HybridPACK™ Light

HybridPACK™ 1 Pin-Fin – power module for hybrid electric vehicle applications for a current range up to 400 A

Sales name	I_C [A]	V_{CES} [V]	Application	Topology	Product status	Packages[1)]
FS400R07A1E3_H5	400	650	Inverter	B6 bridge	Released	HybridPACK™ 1 Pin-Fin
FS200R12A1T4_H5	200	1200	Inverter	B6 bridge	Released	HybridPACK™ 1 Pin-Fin

HybridPACK™ 2 – power module for hybrid electric vehicle applications for a current range up to 900 A

Sales name	I_C [A]	V_{CES} [V]	Application	Topology	Product status	Packages[1)]
FS400R12A2T4	400	1200	Inverter	B6 bridge	Released	HybridPACK™ 2
FS600R07A2E3_B31	600	650	Inverter	B6 bridge	Released	HybridPACK™ 2 Enhanced
FS600R07A2E3_B32	600	650	Inverter	B6 bridge	Released	HybridPACK™ 2 Enhanced
FS800R07A2E3_B31	800	680	Inverter	B6 bridge	Released	HybridPACK™ 2 Enhanced
FS800R07A2E3_B32	800	680	Inverter	B6 bridge	Released	HybridPACK™ 2 Enhanced
FS900R08A2P2_B31	900	750	Inverter	B6 bridge	Released	HybridPACK™ 2 Enhanced
FS900R08A2P2_B32	900	750	Inverter	B6 bridge	Released	HybridPACK™ 2 Enhanced

1) See power modules on page 137

www.infineon.com/hybridpack
www.infineon.com/autoeasy
www.infineon.com/automotive-igbt

Downloaded from Arrow.com.

HybridPACK™ Drive – power module for hybrid electric vehicle applications for a current range up to 820 A

Sales name	I_C [A]	V_{CES} [V]	Application	Topology	Product status	Packages[1)]
FS660R08A6P2FB	660	750	Inverter	B6 bridge	Coming Q3/2018	HybridPACK™ Drive
FS820R08A6P2	820	750	Inverter	B6 bridge	Released	HybridPACK™ Drive
FS820R08A6P2B	820	750	Inverter	B6 bridge	Released	HybridPACK™ Drive
FS820R08A6P2LB	820	750	Inverter	B6 bridge	Released	HybridPACK™ Drive

HybridPACK™ DSC – molded power module for hybrid electric vehicle applications for a current range up to 400 A

Sales name	I_C [A]	V_{CES} [V]	Application	Topology	Product status	Packages[1)]
FS200R07A02E3_S6	200	700	Inverter	B6 bridge	Released	HybridPACK™ DSC L
FF400R07A01E3_S6	400	700	Inverter	H-bridge	Released	HybridPACK™ DSC S

Automotive Easy modules – power modules for auxiliaries and charger up to 75 A

Sales name	I_C [A]	V_{CES} [V]	Application	Topology	Product status	Packages[1)]
FS75R07W2E3_B11A	75	650	Inverter	B6 bridge	Released	Automotive Easy 2B
FS50R07W1E3_B11A	50	650	Inverter	B6 bridge	Released	Automotive Easy 1B
F4-50R07W1H3_B11A	50	650	DC-DC converter	H-bridge	Released	Automotive Easy 1B
F4-75R07W1H3_B11A	75	650	DC-DC converter	H-bridge	Released	Automotive Easy 1B
FZ30R07W1E3_B31A	30	650	PTC heater	Single switches	Released	Automotive Easy 1B

1) See power modules on page 137

HybridPACK™ Drive block diagram

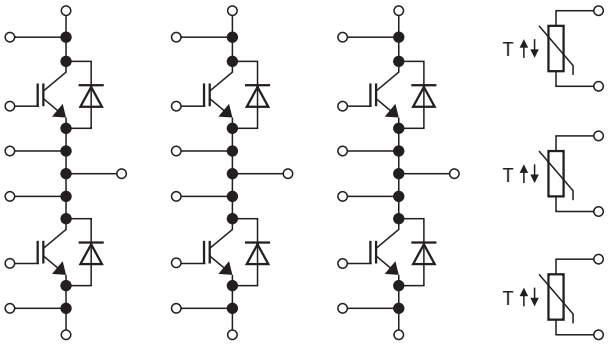

HybridPACK™ DSC S block diagram

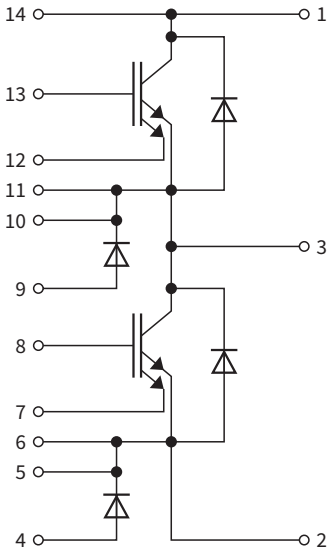

www.infineon.com/hybridpack
www.infineon.com/autoeasy
www.infineon.com/automotive-igbt

Downloaded from Arrow.com.

Temperature protected switches TEMPFET™

TEMPFET™ provides the first level of temperature and current protection via its temperature sensor.
The temperature sensor is available on external pins and enables direct gate access and flexible temperature response control.

Features

- Logic level input
- Analog driving capability
- Potential-free temperature sensor
- High-speed switching (100 kHz)
- Overload protection and thermal shutdown with external circuit
- Avalanche rated

Product overview TEMPFET™: temperature protected switches

Product name	V_{DS} [V]	$R_{DS(on)}$ [mΩ]	I_D [A]	$V_{GS(th)}$ (min–max) [V]	Q_G (typ) [nC]	Package[1]
BTS282Z	49	6.50	80	1.20 … 2.00	155	TO263-7 (D^2PAK 7-leg), TO220-7-12
BTS244Z	55	12.00	35	1.20 … 2.00	85	TO263-5-2 (D^2PAK 5-leg), TO220-5-12
BTS247Z	55	18.00	33	1.20 … 2.00	60	TO263-5-2 (D^2PAK 5-leg)

1) See packages on page 134 to 136

AEC Qualified

RoHS

www.infineon.com/tempfet

Downloaded from Arrow.com.

Protected low-side switches HITFET™

The HITFET™+ family enables a significant shrink compared to the existing HITFET™ portfolio (up to 50 percent shrink). In order to match each application requirements it offers a highly scalable portfolio based on two different packages (TO252-3 DPAK 3-leg/TO-252-5 DPAK 5-leg and TDOS-8 EP) and two types of feature sets: Standard HITFET™+ family (BT**S**3xxx) and fully featured HITFET™+ family (BT**F**3xxx).

Features

- Overtemperature protection
- Overload protection
- Current limitation
- Short-circuit protection
- Open-load detection (only on BTS3408G)
- Thermal shutdown with auto-restart or latch behavior
- Overvoltage protection
- Logic level input
- Electrostatic Discharge (ESD) protection
- Linear drive capability
- Status feedback
  - Digital flag or with external resistor
  - Analogous with external resistor at input
- Adjustable slew rate (only on BTF3050TE)

Automotive and industrial applications

- Relays
- Fans and pumps
- Solenoids
- Valves
- Heating element
- Bulbs and LEDs
- Fuses
- Line drivers and supply switches

Block diagram HITFET™+ BTF3050TE

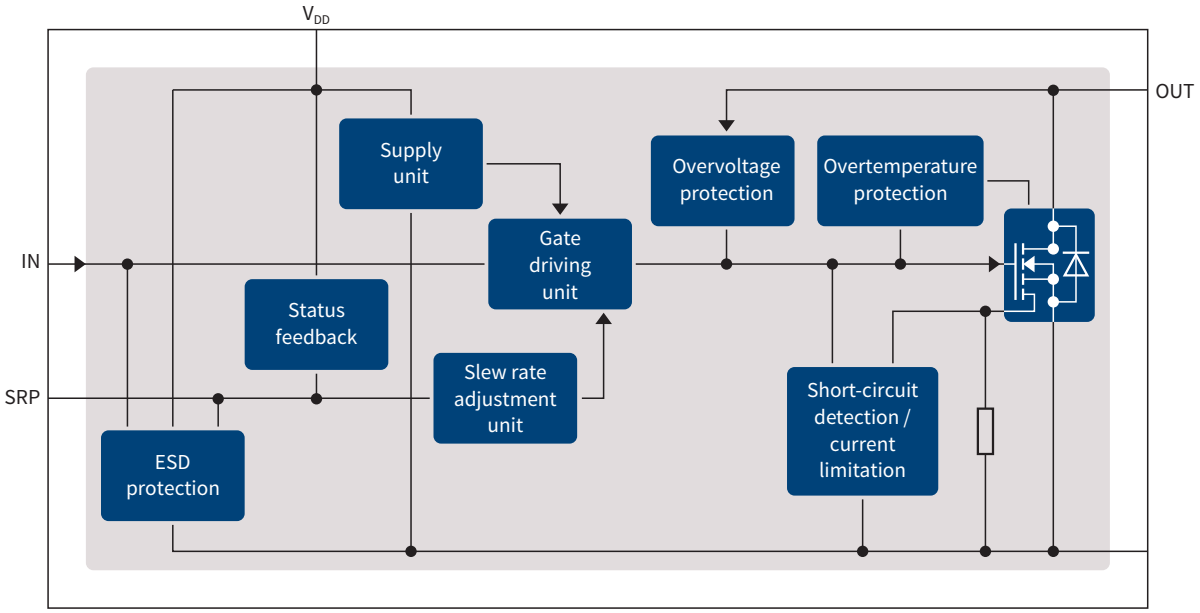

AEC Qualified

RoHS

www.infineon.com/hitfet

Downloaded from Arrow.com.

Protected low-side switches HITFET™

Selection tree – protected low-side switches (12 V voltage class)

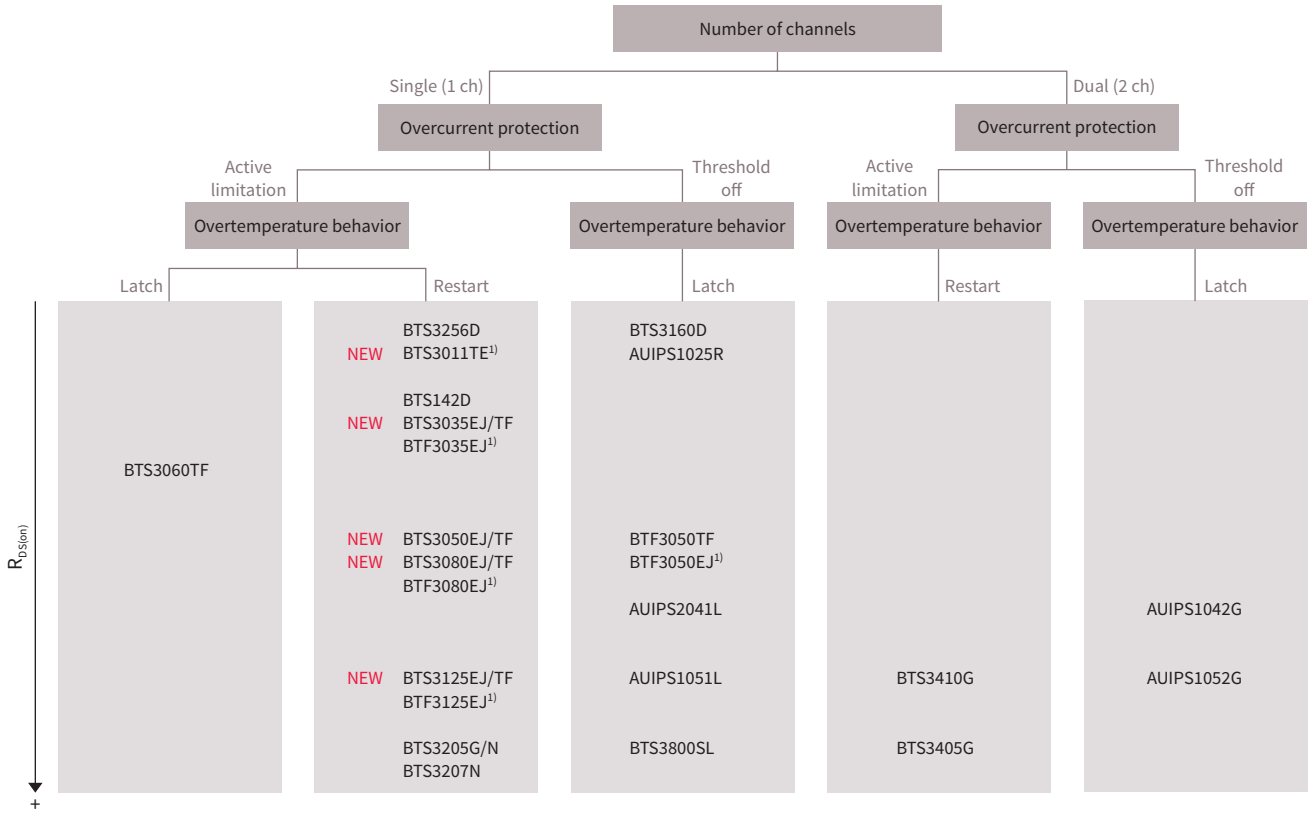

1) Coming Q2/2018

Selection tree – protected low-side switches (24 V and 12 V voltage class)

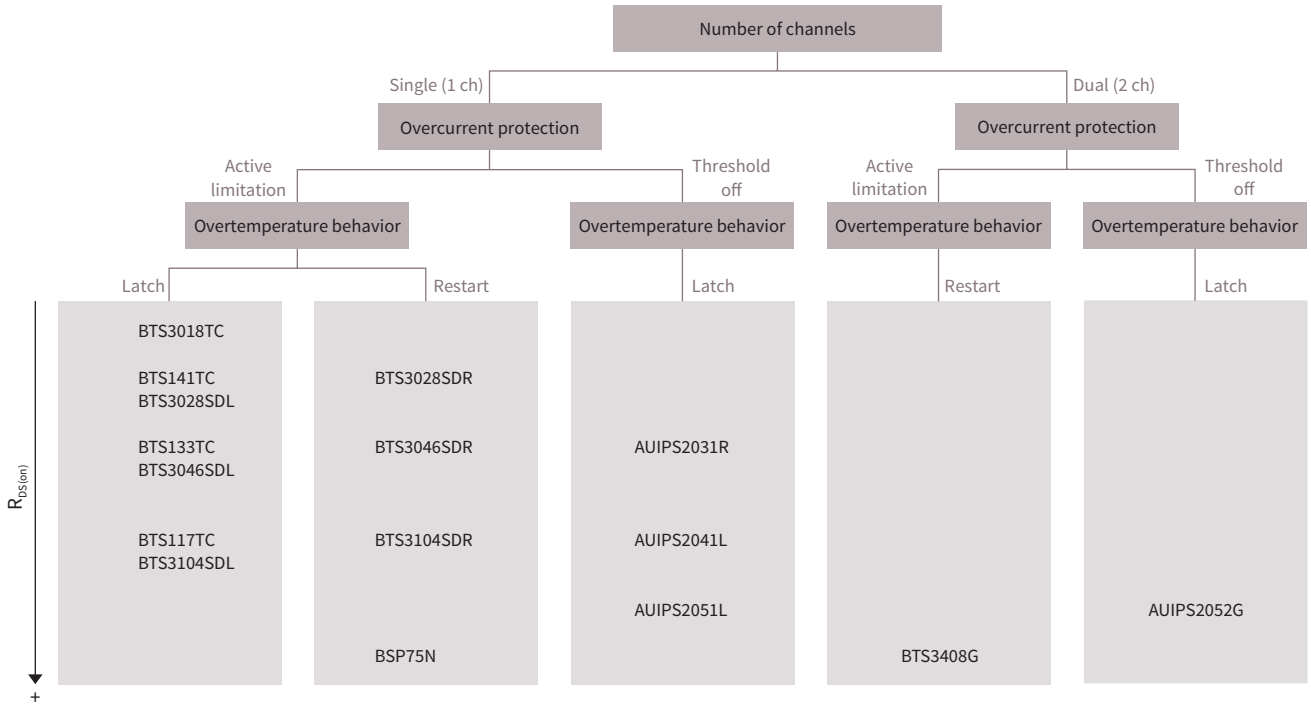

Downloaded from Arrow.com.

Product overview HITFET™/HITFET™+: protected low-side switches

Product name	$R_{DS(on)}$ [mΩ]	$R_{DS(on)}$ (typ) @ 25°C [mΩ]	$R_{DS(on)}$ (max) @ 150°C [mΩ]	Channels	$V_{DS(AZ)}$ [V]	$I_{L(NOM)}$ [A]	$I_{L(lim)}$ [A]	$I_{L\ (LIM)\text{-}Trigger}$ [A]	PWM [kHz]	Diagnostic	Package[1]
HITFET™+ product portfolio											
BTS3035EJ	35	28	70	1	40	5.00	20.00	–	1.0	STATUS pin	TDSO-8 EP
BTS3035TF	35	30	70	1	40	5.00	20.00	–	1.0	–	TO252-3 (DPAK)
BTF3035EJ[2]	35	28	70	1	40	5.00	14.00	41.00	20.0	STATUS pin	TDSO-8 EP
BTF3050TE	50	40	100	1	40	3.00	8.00	30.00	10.0	through SRP pin	TO252-5 (DPAK 5-leg)
BTS3050EJ	50	40	100	1	40	4.00	15.00	–	1.0	STATUS pin	TDSO-8 EP
BTS3050TF	50	44	100	1	40	4.00	15.00	–	1.0	–	TO252-3 (DPAK)
BTF3050EJ[2]	50	40	100	1	40	4.00	10.00	29.00	20.0	STATUS pin	TDSO-8 EP
BTS3060TF	60	50	135	1	40	3.00	10.50	–	1.0	–	TO252-3 (DPAK)
BTS3080EJ	80	64	160	1	40	3.00	10.00	–	1.0	STATUS pin	TDSO-8 EP
BTS3080TF	80	69	160	1	40	3.00	10.00	–	1.0	–	TO252-3 (DPAK)
BTF3080EJ[2]	80	64	160	1	40	3.00	7.00	18.00	20.0	STATUS pin	TDSO-8 EP
BTS3125EJ	125	100	250	1	40	2.00	7.00	–	1.0	STATUS pin	TDSO-8 EP
BTS3125TF	125	108	250	1	40	2.00	7.00	–	1.0	–	TO252-3 (DPAK)
BTF3125EJ[2]	125	100	250	1	40	2.00	5.00	12.00	20.0	STATUS pin	TDSO-8 EP
HITFET™ product portfolio											
BTS3160D	10	8	18	1	40	7.80	–	70.00	1.0	digital	TO252-5 (DPAK 5-leg)
BTS3256D	10	10	20	1	40	7.50	42.00	–	10.0	digital	TO252-5 (DPAK 5-leg)
AUIPS1025R	28	28	55	1	36	4.90	–	15.00	50.0	–	TO-252 (DPAK 3-leg)
AUIPS1041R	100	80	175	1	39	2.20 (@ 50 K/W Rth)	–	4.50	1.0	–	TO-252 (DPAK 3-leg)
AUIPS1042G	100	80	175	2	39	0.70 (@ 130 K/W Rth)	–	4.50	1.0	–	SO-8 (DSO-8)
BTS3410G	200	150	480	2	42	1.30	5.00	–	1.0	through input pin	DSO-8
AUIPS1051L	250	160	450	1	39	1.40 (@ 60 K/W Rth)	–	2.80	10.0	–	SOT-223
AUIPS1052G	250	160	450	2	39	0.50 (@ 130 K/W Rth)	–	2.80	10.0	–	SO-8 (DSO-8)
BTS3207N	500	500	1200	1	42	0.70	5.00	–	1.0	through input pin	SOT223
BTS3205G	700	700	2400	1	42	0.35	0.60	–	1.0	through input pin	DSO-8
BTS3405G	700	700	2400	2	42	0.35	0.60	–	1.0	through input pin	DSO-8
BTS3205N	700	700	2400	1	42	0.35	0.60	–	1.0	through input pin	SOT223
BTS3800SL	800	800	1600	1	42	0.35	0.60	–	10.0	–	SCT595-5
BTS3018TC	18	14	44	1	60	6.00	30.00	–	1.0	through input pin	TO263-3-2
BTS141TC	30	25	68	1	60	5.10	25.00	–	1.0	through input pin	TO263-3-2
BTS3028SDL	30	28	91	1	60	5.00	18.00	–	1.0	through input pin	TO252-3 (DPAK)
BTS3028SDR	30	28	91	1	60	5.00	18.00	–	1.0	through input pin	TO252-3 (DPAK)
BTS133TC	50	40	120	1	60	3.80	21.00	–	1.0	through input pin	TO263-3-2
BTS3046SDL	50	46	134	1	60	3.60	10.00	–	1.0	through input pin	TO252-3 (DPAK)
BTS3046SDR	50	46	134	1	60	3.60	10.00	–	1.0	through input pin	TO252-3 (DPAK)
AUIPS2031R	60	45	110	1	68	2.30 (@ 70 K/W Rth)	–	10.00	20.0	–	TO-252 (DPAK 3-leg)
BTS117TC	100	80	240	1	60	3.50	7.00	–	1.0	through input pin	TO263-3-2
BTS3104SDL	104	104	323	1	60	2.00	6.00	–	1.0	through input pin	TO252-3 (DPAK)
BTS3104SDR	104	104	323	1	60	2.00	6.00	–	1.0	through input pin	TO252-3 (DPAK)
AUIPS2041L	130	100	240	1	68	1.40 (@ 100 K/W Rth)	–	5.00	25.0	–	SOT-223
AUIPS2051L	300	250	520	1	70	0.90 (@ 100 K/W Rth)	–	1.80	35.0	–	SOT-223
AUIPS2052G	300	250	520	2	70	0.90 (@ 100 K/W Rth)	–	1.80	35.0	–	SO-8 (DSO-8)
BTS3408G	550	480	1000	2	60	0.55	1.00	–	1.0	through input pin	DSO-8
BSP75N	550	490	1350	1	60	0.70	1.00	–	5.0	through input pin	SOT223

1) See packages on page 134 to 136
2) Coming Q2/2018

www.infineon.com/hitfet

Downloaded from Arrow.com.

Smart multichannel switches for body (SPIDER+)

Infineon's integrated SPIDER+ family comprises 9 value scalable products. The simplified portfolio includes 2 LS (8 + 4 ch), 2 HS (8 ch) and 5 flexible devices (8 ch) with up to 6 configurable channels. Hence, a broad range of applications is addressable. Above all, the new 8 ch HS device offers a very cost efficient solution to drive small HS loads, including open load at ON detection.

SPIDER+ devices are equipped with limp home and cranking, very low current consumption, enhanced diagnosis features, excellent thermal performance (exposed pad packages) and an input mapping function for the 2 direct inputs.

The family approach with consistent SPI registers, identical output stages for all channels and a comprehensive pin-to-pin compatibility reduce the design effort and therefore system costs down options as well as partitioning adjustments without a PCB re-design. Small TSDSO-14 EP and 24-pin packages realize PCB space savings.

Applications
- Automotive/industrial relays and solenoids
- Single LEDs and small bulbs
- Unipolar stepper motors

Key features SPIDER+
- Limp home and cranking functionality implemented for all products (down to 3 V battery)
- Short circuit, overload and overtemperature protection
- Open load at ON diagnosis
- Paralleling of outputs possible
- Very low current consumption in sleep mode
- 16-bit SPI communication (5 MHz)
- Enhanced diagnosis capability
- 2 PWM inputs with mapping function
- 4 channel devices: TSDSO-14 EP package
- 8 channel devices: TSDSO-24 package

Benefits
- Highest operational safety
- Only one time design effort required (family concept)
- High design flexibility
- Up to 6 configurable channels
- Cost down options without re-design
- Entire path from microcontroller to loads trackable (supports ISO 26262)
- Cost efficient HS driver available
- PCB space savings (small packages)
- Value scalable product portfolio
- Excellent performance vs. price ratio

SPIDER+ LED

The SPIDER+ LED devices combine the feature set of the SPIDER+ family with additional features to drive small bulbs or LEDs.

Beside one high-side channel device, three configurable devices support LED designs in the most cost efficient way with diagnosis and protection features.

Applications
- Single LEDs and small bulbs
- Resistor based LED light designs

Key features
- SPIDER+ feature set
- Open load at ON diagnosis with tight threshold of 6 mA for TLE75620-EST to avoid LED glimming
- 2 additional PWM generators
- Bulb inrush mode to drive small bulbs

www.infineon.com/spider

Downloaded from Arrow.com.

SPIDER+ whole family overview/selection tree

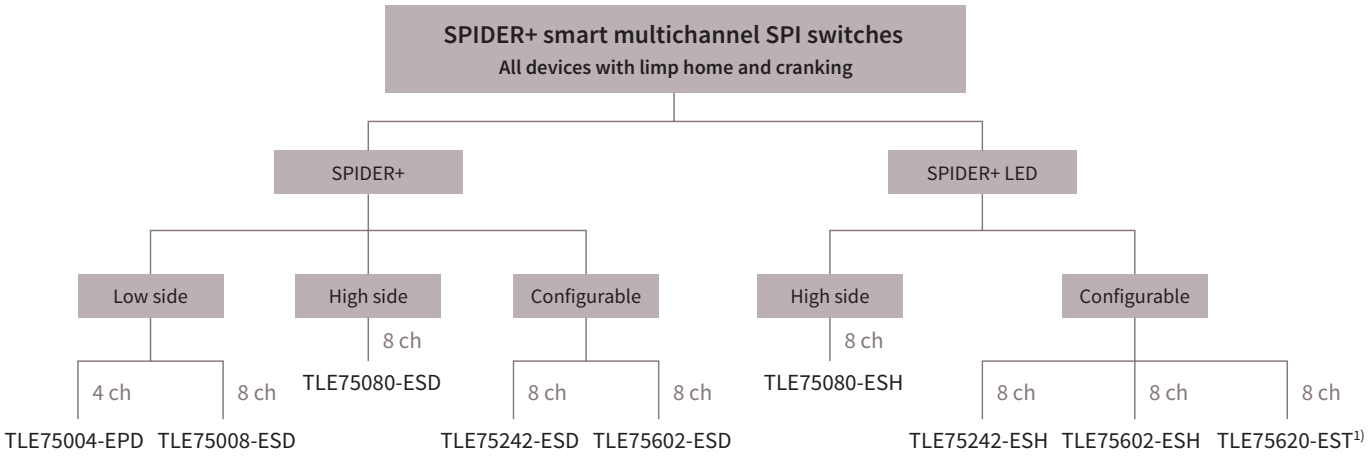

1) With open load at ON treshold of 6 mA

Block diagram TLE75602-ESD

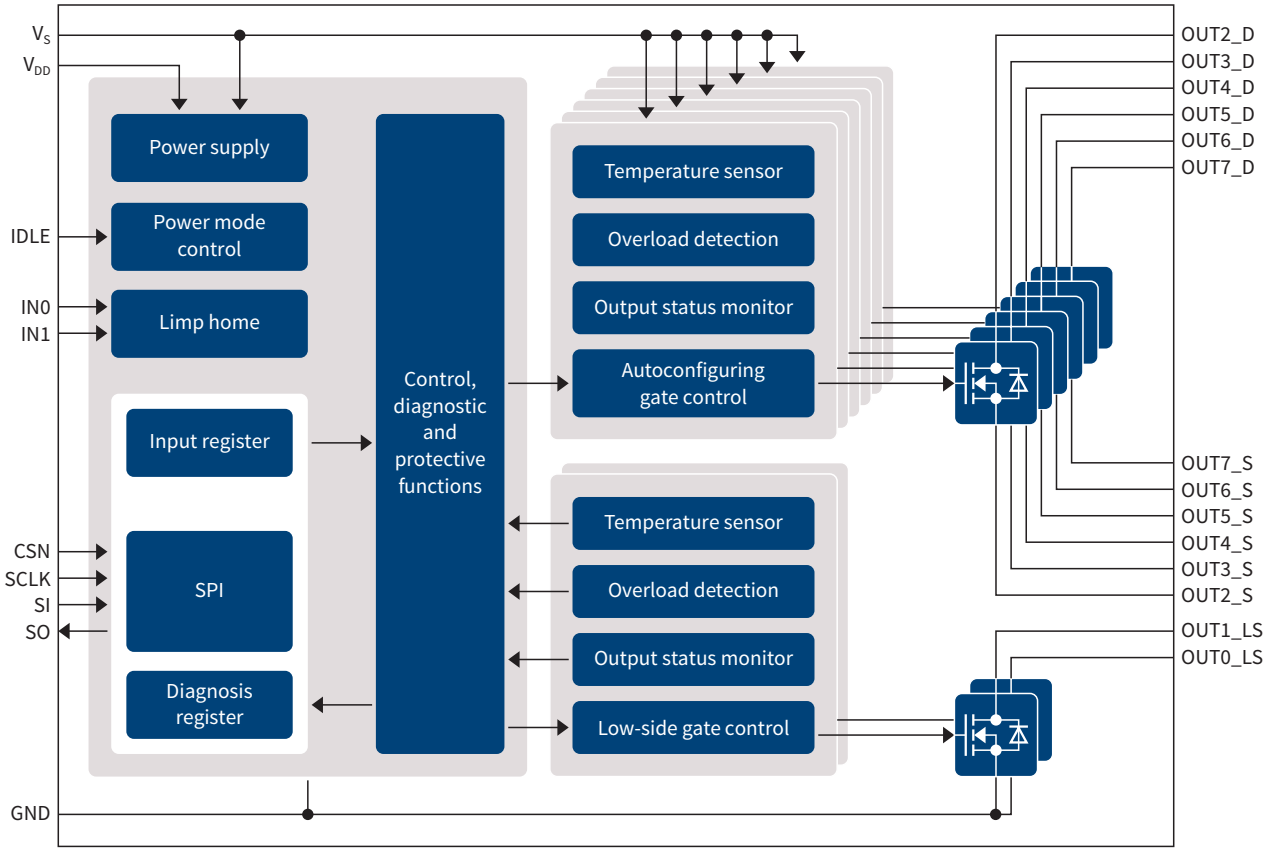

www.infineon.com/spider

Downloaded from Arrow.com.



Downloaded from Arrow.com.

Smart multichannel switches for body (SPIDER+)

SPIDER/SPIDER+ product overview

	Product name	Configurable	High side	Low side	Cranking mode [V]	Limp home	LED driver OL @ ON, +2 add. PWM, bulb inrush	$R_{DS(on)}$ (typ) @ 25°C [mΩ]	$V_{DS(AZ)}$ (min) [V]	$I_{L(NOM)}$ [mA]	Energy capability (repetitive 1×10^6 cycles) [mJ]	Number of direct inputs	Package[1]
SPIDER+	TLE75004-EPD			4	3	●		1.0	42	470	10	2	TSDSO-14 EP
	TLE75008-ESD			8	3	●		1.0	42	330	10	2	TSDSO-24 EP
	TLE75602-ESD	6		2	3	●		1.0	42	330	10	2	TSDSO-24 EP
	TLE75080-ESD		8		3	●		1.0	42	330	10	2	TSDSO-24 EP
	TLE75242-ESD	2	4	2	3	●		1.0	42	330	10	2	TSDSO-24 EP
SPIDER+ LED	TLE75080-ESH		8		3	●	●	1.0	42	330	10	2	TSDSO-24 EP
	TLE75242-ESH	2	4	2	3	●	●	1.0	42	330	10	2	TSDSO-24 EP
	TLE75602-ESH	6		2	3	●	●	1.0	42	330	10	2	TSDSO-24 EP
	TLE75620-EST	6	2		3	●	●	1.0	42	330	10	2	TSDSO-24 EP
SPIDER	TLE7233EM			4		●		1.1	41	470	13	4	SSOP-24-EP
	TLE7244SL			8		●		0.8	41	290	24	4	SSOP-24
	TLE7230R			8				0.8	48	500	15	4	DSO-36

1) See packages on page 134 to 136

www.infineon.com/spider

Downloaded from Arrow.com.

Smart multichannel switches for powertrain and safety

The multichannel low-side switches family for powertrain, safety and industrial applications is specially designed to drive a various range of loads from relays, injector valves, oxygen probe heaters and general purpose solenoids, through to unipolar stepper motors.

We offer a complete family concept with full scalability from 2 to 18 channels and leading-edge technology. All multichannel switches have full certification and are equipped with embedded protection functions and enhanced diagnosis which are used in numerous industry platforms.

Applications

- Engine management systems
- Diesel direct injection
- Gasoline direct injection
- Multi-port injection
- Industrial applications

Features

- Overvoltage protection
  - Active clamping for inductive loads
- Undervoltage protection
  - Power-on reset
  - Undervoltage shutdown
- Overcurrent protection
  - Current limitation
  - Overcurrent switch-off
- Overtemperature protection
  - Thermal shutdown
- Electrostatic Discharge (ESD) protection
- Direct input control (for PWM)
- Communication interface (control/diagnosis)
  - Serial Peripheral Interface (SPI)
  - Micro Second Channel (MSC)
- 5 V and 3.3 V µC compatibility
- Status flag
- 2-bit diagnosis feedback for:
  - Short-to-GND
  - Open-load
  - Short-to-battery
  - Normal operation

Benefits

- One family concept
- Designed for dedicated applications, but also available for off-the-shelf use as standard products
- Integrated self-protection and diagnosis
- Enhanced error detection for improved system reliability
- Control via standard SPI Bus or MicroSecond channel (TLE8718SA) or direct inputs
- Suitable for daisy-chain configuration to save I/O ports
- Support of safety-critical applications by overvoltage protection on all pins (TLE8718SA)
- High quality ensured with automotive excellence program on Zero Defect strategy

AEC Qualified RoHS

www.infineon.com/flex

Downloaded from Arrow.com.

Block diagram (TLE8102SG)

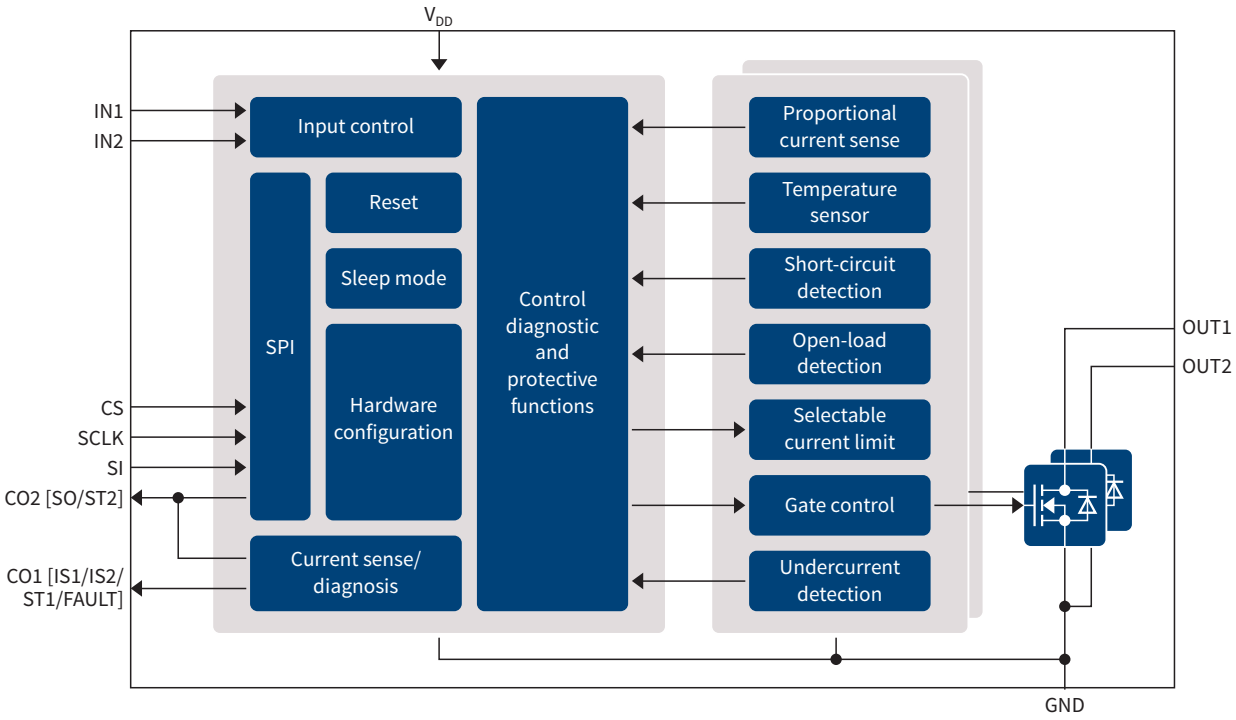

Selection tree – multichannel low-side switches

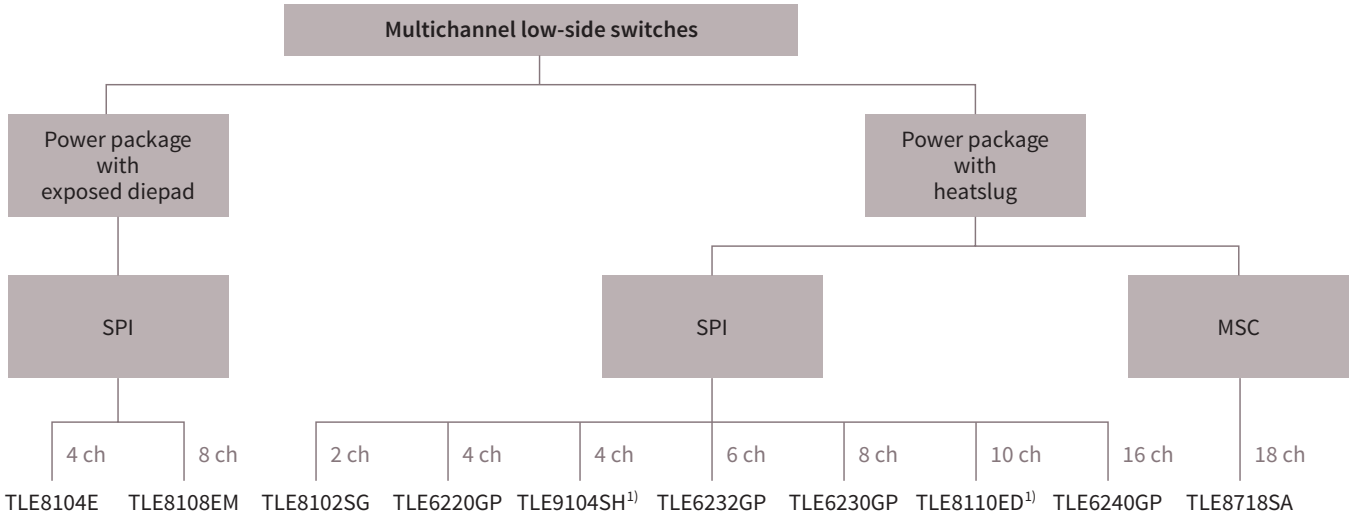

1) Coming Q2/2018

Downloaded from Arrow.com.

Smart multichannel switches for powertrain and safety

Product overview

	Target loads[2]	Channels	Electrical specification				Interface				Overcurrent protection		Status flag	Package[1]
			#	$R_{DS(on)}$ (max) @ 25°C [mΩ]	$I_{L(lim)}$ (max) [A]	V_{CL} (typ) [V]	Direct input pins	SPI	MSC	Daisy-chain	I-limit	Switch-Off		
TLE8102SG	High-current solenoids, O2-heater	2	2x	0.18	5.00 (9.00)	54	2	8-bit		●	●	●	●	DSO-12
TLE6220GP	Injectors, high-current solenoids, stepper-motor	4	4x	0.32	3.00	53	4	8-bit		●	●		●	DSO-20 (Power-SO)
TLE8104E	Injectors, high-current solenoids, stepper-motor	4	4x	0.32	3.00	53	4	8-bit		●	●		●	DSO-20 EP
TLE9104SH[3]	Injectors, high-current solenoids, high-current relays	4	4x	0.15	5.00	60	4	16-bit		●		●		DSO-20 (Heatslug)
TLE6232GP	High-current relays, injectors, high-current solenoids	6	4x 2x	0.25 0.45	3.00 1.50	53	6	16-bit			●		●	DSO-36 (Power-SO)
TLE6230GP	Relays, high-current relays	8	8x	0.80	1.00	43	4	16-bit			●		●	DSO-36 (Power-SO)
TLE8108EM	LEDs, relays	8	8x	0.80	0.50	45	4	16-bit		●		●		SSOP-24 EP
TLE8110ED[3]	LED, relays, injectors, high-current solenoids	10	4x 4x 2x	0.60 0.30 0.25	1.70 2.60 3.70	55 55 55	10	16-bit		●		●		DSO-36 (Dual gauge)
TLE6240GP	High-current relays, injectors, high-current solenoids	16	8x 4x 4x	1.00 0.35 0.30	1.00 3.00 3.00	50 53 53	8	16-bit		●	●		●	DSO-36 (Power-SO)
TLE8718SA	LEDs, relays, injectors, high-current solenoids, O2-heater	18	2x 2x 8x 2x 2x 2x	0.15 0.26 0.53 0.35 1.78 0.96	8.00 3.00 2.20 2.20 0.60 0.60	55			LVDS + LVTTL		●	●		DSO-36 (Power-SO)

1) See packages on page 134 to 136
2) Indication only. Devices can drive any kind of inductive/resistive load according to spec
3) Coming Q2/2018

Downloaded from Arrow.com.



Downloaded from Arrow.com.



Protected high-side switches PROFET™

The highly integrated PROFET™ family (PROtected FET) incorporates a broad range of smart features, like diagnosis and protection. PROFET™ intelligent power switches consist of DMOS power transistor and CMOS logic circuitry for complete built-in protection.

The PROFET™ family offers protection against overload, overvoltage, short-circuit, excessive temperature, loss of ground, power supply loss and Electrostatic Discharge (ESD). The PROFET™ family products are also capable of protecting against dynamic overvoltage such as load dump and inductive load turn-off.

The PROFET™ diagnostics offer the choice of either status or current sense features, or a combination of both.
In the event of a malfunction, the status feature is able to diagnose overtemperature or open-load. The PROFET™ diagnostic features also provide the user with precise information about switch and load. Diagnostic feedback and load current sensing minimize risks by eliminating the need for additional discrete circuitry and assembly.

This vast range of smart features makes the PROFET™ ideal for a variety of automotive (12 V), trucks and agriculture (24 V) and industrial applications.

PROFET™+2

PROFET™+2 is Infineon's latest protected high-side power switches in TSDSO-14 exposed pad package state of the art diagnostics and protection features. The family offers benchmark form factor, the lowest R_{DSON} (2 x 8 mΩ) and smallest package (TSDSO-14 EP) pin pitch 0.65 mm.

The whole family is compatible with the hardest reverse battery requirements, with ReverSave™ available for the 1st time in the market on a single chip product. The family offers outstanding energy efficiency with reduced current consumption, state of the art current sense accuracy (K_{ILIS}), benchmark low cranking voltage capability and faster switching/slew rate with no impact on EMC.

AEC Qualified RoHS

www.infineon.com/profet

Downloaded from Arrow.com.

PROFET™ family

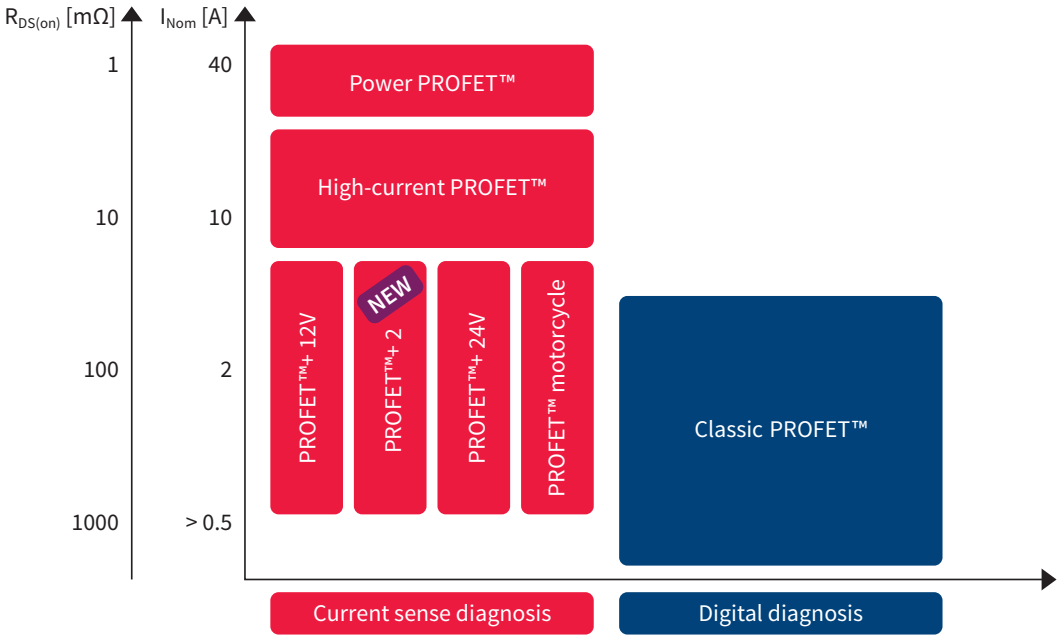

Block diagram BTS500x0-1EGA

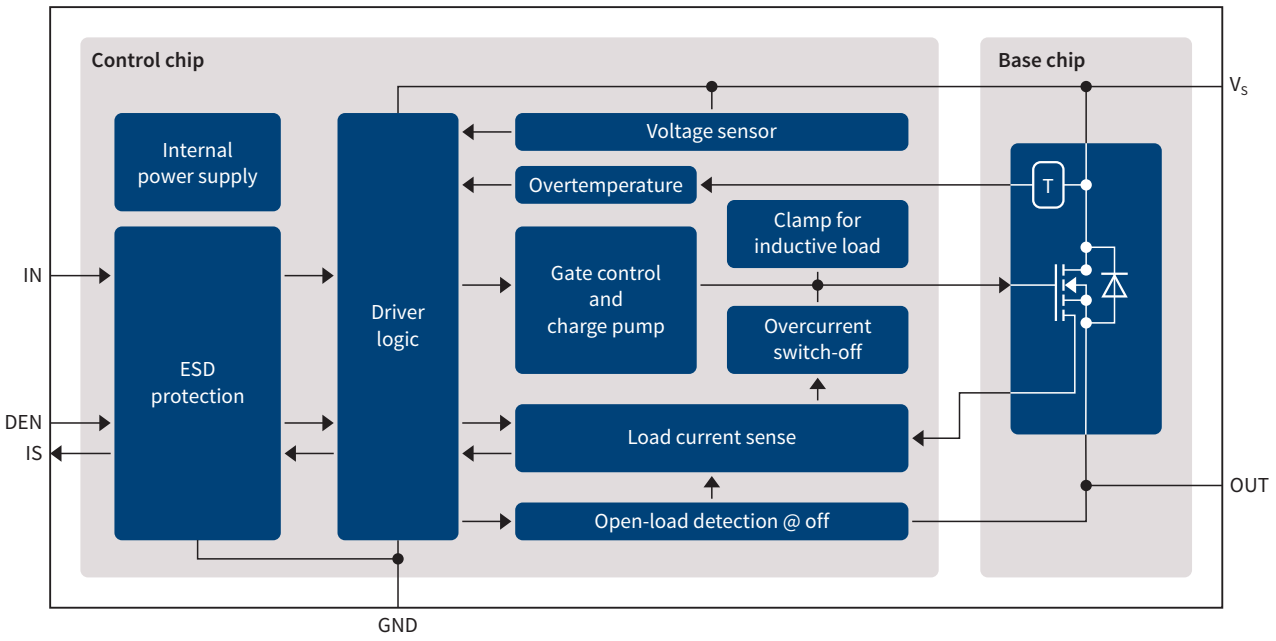

Application examples

- Lighting
  - Exterior and interior lighting (bulbED)
- Power distribution
  - Relay and fuse replacement, solid state, relay, Smart Power Distribution Center (PDC)
- Heating
  - Seat, PTC, auxiliary, glow plug
- Motor control
  - DC brush motor, pumps, fans
- Infotainment

Load

- Capacitive, such as LED modules
- Resistive, such as seat heating
- Inductive, such as solenoids
- Electronic, such as ECU

www.infineon.com/profet

Downloaded from Arrow.com.

Protected high-side switches PROFET™

PROFET™ families overview

Family name	Basic features	Benefits
PROFET™+2 NEW	› High-side switches for nominal load currents between 0.5 and 10 A › Especially suitable for capacitive loads e.g. halogen bulbs and LED modules › Capable to drive resistive loads e.g. small seat heating applications requiring below 8 A nominal currents › Operating voltage range 3.1 – 28 V › 3.3 and 5 V compatible logic input › PWM capability up to 1 kHz › Protection: current tripping, overtemperature, overvoltage, load dump, reverse polarity, short-circuit › Diagnosis: load current sense output	› 50% reduced current consumption › Simplified and cost efficient ground network only requiring small resistor while offering functional system safety › Outstanding current sense accuracy (K_{ILIS}) ≤ 5% at nominal current › Benchmark cranking voltage capability able to work down to 3.1 V › 40% smaller package than previous generation offering PCB area savings › Optimized for design flexibility across the family due to pin to pin compatibility › Very low output leakage current “quiescent current” (≤ 0.5 µA up to 85°C)
Power PROFET™	› High-side switches for load currents up to 45 A › Suitable for resistive, capacitive and inductive loads › Optimized for 12 V supply voltage › Voltage-driven input logic (3.3 and 5 V) › Stable behavior during cranking down to 3.2 V supply voltage › Lowest on-state resistance down to 1.0 mΩ › Protection: overtemperature, overvoltage, load dump, reverse polarity, short-circuit › Diagnosis: load current sense output	› Efficient and robust drivers for high-current loads › Monitoring of load current › Protection of device, wiring harness and load › High short-circuit robustness › Available in standard power package (D^2PAK)
High-current PROFET™	› High-side switches for load currents up to 23 A › Suitable for resistive, capacitive and inductive loads › Optimized for 12 and 24 V supply voltages › Current-driven and voltage-driven input logic › On-state resistance from typically 20 to 3 mΩ › PWM capability › Very high energy capability › Protection: overtemperature, overvoltage, load dump, reverse polarity, short-circuit › Diagnosis: load current sense output	› Efficient and robust drivers for high-current loads › Monitoring of load current › Protection of device, wiring harness and load › Available in standard power packages, such as DPAK, D^2PAK and TSDSO-14
PROFET™+ 12V and 24V	› High-side switches for load currents between 0.5 and 10 A › Especially suitable for capacitive loads › Operating voltage range: – PROFET™+ 12V: 5 – 28 V – PROFET™+ 24V: 5 – 36 V › 3.3 and 5 V compatible logic input › PWM capability up to 200 Hz (PROFET™+ 12V) or 400 Hz (PROFET™+ 24V) › Protection: overtemperature, overvoltage, load dump, reverse polarity, short-circuit › Diagnosis: load current sense output	› Maximum design flexibility thanks to identical footprint › Pin-compatibility between 12 and 24 V and within each of the individual family members › Very low stand-by current (< 0.5 µA max.) › High short-circuit robustness › Outstanding current sense accuracy › Improved heat dissipation of DSO package
Classic PROFET™	› High-side switches for load currents between 0.25 and 21 A › Suitable for resistive, capacitive and inductive loads › 12 V and 24 V products › Extended operating voltage range, up to 60 V › Improved electromagnetic compatibility (EMC) › Protection: overtemperature, overvoltage, load dump, short-circuit, reverse polarity, ESD › Diagnosis: open load at OFF detection, open load at ON detection (partly) › Open drain diagnosis output (status feedback)	› Established and proven technology/products for more than 10 years › Benchmark in energy robustness › High-voltage capability › Fast switching capability › Fast demagnetization of inductive loads › Low current consumption › Broad application range

Downloaded from Arrow.com.

No diagnosis

Product name	Product family	$R_{DS(on)}$ (typ) [mΩ]	$R_{DS(on)}$ (max) @ T_j = 150°C [mΩ]	Nominal load current [A]	E_{AS} [mJ]	Operating voltage range [V]	$I_{L(ISO)}$ (typ) [A]	24 V capable	Package[1]
BTS4140N[2]	Classic PROFET™	1000	3000	0.20	1000 @ 0.15 A	4.90 … 60.00	0.70	●	SOT223
BRS41KOS-ME-N	Classic PROFET™	800	3000	0.20	1001 @ 0.15 A	4.90 … 45.00	0.70	●	SOT223
BSP742T	Classic PROFET™	260	700	1.10	100 @ 0.50 A	5.00 … 34.00	3.00		DSO-8
BSP452	Classic PROFET™	160	400	0.70	500 @ 0.50 A	5.00 … 34.00	1.50		SOT223
BTS452T	Classic PROFET™	150	380	2.20	150 @ 1.00 A	6.00 … 52.00	6.00	●	TO252-5 (DPAK 5-leg)
BSP752T	Classic PROFET™	150	380	1.70	125 @ 1.00 A	6.00 … 52.00	6.00	●	DSO-8
BTS4141N	Classic PROFET™	150	320	0.70	700 @ 0.70 A	12.00 … 45.00	1.10	●	SOT223
BTS4142N	Classic PROFET™	150	320	1.40	160 @ 1.00 A	12.00 … 45.00	2.20	●	SOT223
BSP762T	Classic PROFET™	70	200	2.40	870 @ 1.00 A	5.00 … 34.00	7.00		DSO-8
BTS462T	Classic PROFET™	70	200	4.40	4400 @ 1.00 A	5.00 … 34.00	10.00		TO252-5 (DPAK 5-leg)
BTS730	Classic PROFET™	70	140	3.00	n/a	5.90 … 16.90	20.00		DSO-20
BSP772T	Classic PROFET™	50	120	3.10	900 @ 1.50 A	5.00 … 34.00	12.00		DSO-8
BTS441TG	Classic PROFET™	15	37	21.00	700 @ 21.00 A	4.75 … 41.00	65.00	●	TO263-5-2

1) See packages on page 134 to 136
2) Current controlled input at T_j = 125°C

Digital diagnosis

Product name	Product family	$R_{DS(on)}$ (typ)[mΩ]	$R_{DS(on)}$ (max) @ T_j = 150°C [mΩ]	Nominal load current [A]	E_{AS} [mJ]	Operating voltage range [V]	$I_{L(ISC)}$ (typ) [A]	Number of channels	24 V capable	High current limit	Low current limit	Overvoltage shutdown	Short-circuit diagnosis			Package[1]
													to GND	to battery	Open-load in ON-state	
BTS4300SGA	Classic PROFET™	300	600	0.40	800 @ 0.300 A	5.00 … 34.00	1.00	1			●		●	●		DSO-8
BSP742R	Classic PROFET™	250	700	0.40	800 @ 0.300 A	5.00 … 34.00	1.00	1			●		●	●		DSO-8
BSP742RI[2]	Classic PROFET™	250	700	0.40	800 @ 0.300 A	5.00 … 34.00	1.00	1			●		●	●		DSO-8
BTS307	Classic PROFET™	220	500	1.70	–	5.80 … 58.00	10.00	1	●	●			●	●		TO263-5-2
BTS410-F2	Classic PROFET™	190	440	1.80	–	4.70 … 42.00	5.50	1	●	●		●	●	●		TO263-5-2
BTS410-E2	Classic PROFET™	190	440	1.80	–	4.70 … 42.00	12.00	1	●	●		●	●	●		TO263-5-2
BTS4175SGA	Classic PROFET™	175	350	1.30	125 @ 1.000 A	6.00 … 52.00	6.50	1	●	●			●	●		DSO-8
BTS712N1	Classic PROFET™	165	400	1.10	150 @ 1.900 A	5.00 … 34.00	4.00	4		●		●		●		DSO-20
BTS711L1	Classic PROFET™	165	400	1.10	150 @ 1.900 A	5.00 … 35.00	4.00	4		●		●	●		●	DSO-20
BTS409L1	Classic PROFET™	160	400	2.30	335 @ 2.300 A	5.00 … 34.00	7.50	1		●		●	●	●		TO263-5-2
BTS4160DGA	Classic PROFET™	160	320	1.20	65 @ 2.900 A	5.50 … 20.00	6.50	2		●				●		DSO-14
BTS611L1	Classic PROFET™	160	400	2.20	290 @ 2.300 A	5.00 … 34.00	7.50	2		●		●	●	●	●	TO263-5
BTS612N1	Classic PROFET™	160	400	2.30	290 @ 2.300 A	5.00 … 34.00	7.50	2		●		●	●	●		TO220
BSP752R	Classic PROFET™	150	380	1.70	125 @ 1.000 A	6.00 … 52.00	6.00	1	●	●			●	●		DSO-8
BTS452R	Classic PROFET™	150	380	2.20	150 @ 1.000 A	6.00 … 52.00	6.00	1	●		●		●	●		TO252-5 (DPAK 5-leg)
BTS4880R	Classic PROFET™	150	320	0.60	10,000 @ 0.625 A	11.00 … 45.00	1.10	8	●				●			DSO-36 (Power-SO)

1) See packages on page 134 to 136
2) Inversed logic for diagnosis

www.infineon.com/profet

Downloaded from Arrow.com.

Protected high-side switches PROFET™

Digital diagnosis (cont'd)

Product name	Product family	$R_{DS(on)}$ (typ)[mΩ]	$R_{DS(on)}$ (max) @ T_j = 150°C [mΩ]	Nominal load current [A]	E_{AS} [mJ]	Operating voltage range [V]	$I_{L(SC)}$ (typ) [A]	Number of channels	24 V capable	High current limit	Low current limit	Overvoltage shutdown	Short-circuit diagnosis			Package[1]
													to GND	to battery	Open-load in ON-state	
BTS716GB	Classic PROFET™	140	280	1.30	76 @ 2.300 A	5.50 … 40.00	6.50	4	●	●				●		DSO-20
BTS4130QGA	Classic PROFET™	130	260	1.10	76 @ 2.300 A	5.50 … 20.00	6.50	4		●				●		DSO-20
BTS5210G	Classic PROFET™	110	280	1.90	65 @ 2.900 A	5.50 … 40.00	6.50	2	●	●				●		DSO-14
BTS5210L	Classic PROFET™	110	280	1.90	84 @ 2.900 A	5.50 … 40.00	6.50	2	●	●				●		DSO-12
BTS716G	Classic PROFET™	110	280	1.30	76 @ 2.300 A	5.50 … 40.00	6.50	4	●	●				●		DSO-20
BTS723GW	Classic PROFET™	95	210	2.10	110 @ 2.500 A	7.00 … 58.00	8.00	2	●		●		●	●		DSO-14
BTS721L1	Classic PROFET™	85	200	1.60	300 @ 2.900 A	5.00 … 34.00	8.00	4		●		●		●		DSO-20
AUIPS7091G	Classic PROFET™	80	230	2.00	–	6.00 … 35.00	5.00	1			●		●			SO-8 (DSO-8)
BTS621L1	Classic PROFET™	80	200	4.40	395 @ 4.400 A	5.00 … 34.00	14.00	2		●		●	●	●	●	TO263-7
BTS5215L	Classic PROFET™	70	180	4.80	178 @ 3.500 A	5.50 … 40.00	12.00	2	●	●				●		DSO-12
BTS724G	Classic PROFET™	70	180	1.80	120 @ 3.300 A	5.50 … 40.00	12.00	4	●	●				●		DSO-20
BTS426L1	Classic PROFET™	50	120	7.00	740 @ 7.000 A	5.00 … 34.00	25.00	1		●		●	●	●		TO263-5-2
BTS428L2	Classic PROFET™	50	120	7.00	190 @ 7.000 A	4.75 … 41.00	17.00	1	●	●			●		●	TO252-5 (DPAK 5-leg)
BTS432E2	High-current PROFET™	38	70	11.00	1700 @ 20.000 A	4.50 … 42.00	44.00	1	●	●		●	●		●	TO220-5-11
BTS432E2 E3062A	High-current PROFET™	38	70	11.00	1700 @ 20.000 A	4.50 … 42.00	44.00	1	●	●		●	●		●	TO263-5-2
BTS436L2	Classic PROFET™	35	72	9.80	–	4.75 … 43.00	51.00	1	●	●			●	●	●	TO263-5-2
AUIPS7221R	Classic PROFET™	30	70	6.00	–	6.00 … 60.00	30.00	1	●	●			●			TO-252 (DPAK 5-leg)
AUIPS72211R	Classic PROFET™	30	70	6.00	–	6.00 … 60.00	30.00	1	●	●			●			TO-252 (DPAK 5-leg)
BTS442E2	High-current PROFET™	18	35	21.00	2100 @ 20.000 A	4.50 … 42.00	95.00	1	●	●		●	●		●	TO220-5-11
BTS442E2 E3062A	High-current PROFET™	18	35	21.00	2100 @ 20.000 A	4.50 … 42.00	95.00	1	●	●		●	●		●	TO263-5-2
BTS441RG	Classic PROFET™	15	37	21.00	700 @ 21.000 A	4.75 … 41.00	55.00	1	●	●				●		TO263-5-2

1) See packages on page 134 to 136

Current sense, current input

Product name	Product family	$R_{DS(on)}$ (typ) [mΩ]	$R_{DS(on)}$ (max) @ T_j = 150°C [mΩ]	Nominal load current [A]	E_{AS} @ 20 A [mJ]	Operating voltage range [V]	$I_{L(SC)}$ (typ) [A]	24 V capable	Short-circuit to GND protection		Over-temperature protection		Inverse current operation capability	Open-load in ON detection	Package[1]
									Latch	Restart	Latch	Restart			
BTS6163D	High-current PROFET™	20.0	40.0	6.5	250	5.5 … 62.0	70	●	●			●		●	TO252-5 (DPAK 5-leg)
BTS443P	High-current PROFET™	16.0	32.0	6.5	150	5.0 … 36.0	65			●		●		●	TO252-5 (DPAK 5-leg)
BTS5016SDA	High-current PROFET™	16.0	32.0	6.5	120	5.5 … 20.0	75		●			●		●	TO252-5 (DPAK 5-leg)
BTS5014SDA	High-current PROFET™	14.0	28.0	7.0	150	5.5 … 20.0	80		●			●		●	TO252-5 (DPAK 5-leg)
BTS5012SDA	High-current PROFET™	12.0	24.0	8.0	200	5.5 … 20.0	90		●			●		●	TO252-5 (DPAK 5-leg)
BTS6142D	High-current PROFET™	12.0	22.0	8.0	250	5.5 … 24.0	100		●			●		●	TO252-5 (DPAK 5-leg)
BTS6143D	High-current PROFET™	10.0	18.0	10.0	300	5.5 … 38.0	105		●			●		●	TO252-5 (DPAK 5-leg)
BTS6133D	High-current PROFET™	10.0	18.0	10.0	300	5.5 … 38.0	105		●			●	●	●	TO252-5 (DPAK 5-leg)
BTS50085-1TMA	High-current PROFET™	9.0	17.0	11.0	1200	5.5 … 58.0	90	●	●			●	●		TO263-7 (D^2PAK 7-leg)
BTS50085-1TMB	High-current PROFET™	9.0	17.0	11.0	1200	5.0 … 58.0	90	●	●			●	●		TO220-7-11

1) See packages on page 134 to 136

Downloaded from Arrow.com.

Current sense, current input (cont'd)

Product name	Product family	$R_{DS(on)}$ (typ) [mΩ]	$R_{DS(on)}$ (max) @ T_j = 150°C [mΩ]	Nominal load current [A]	E_{AS} @ 20 A [mJ]	Operating voltage range [V]	$I_{L(SC)}$ (typ) [A]	24 V capable	Short-circuit to GND protection		Over-temperature protection		Inverse current operation capability	Open-load in ON detection	Package[1]
									Latch	Restart	Latch	Restart			
BTS50080-1TMA	High-current PROFET™	8.0	16.0	12.0	400	5.5 … 38.0	130		●			●		●	TO263-7 (D^2PAK 7-leg)
BTS50080-1TMB	High-current PROFET™	8.0	16.0	12.0	400	5.5 … 38.0	130		●			●		●	TO220-7-12
BTS50080-1TMC	High-current PROFET™	8.0	16.0	12.0	400	5.5 … 38.0	130		●			●		●	TO263-7 (D^2PAK 7-leg)
BTS50080-1TEA	High-current PROFET™	8.0	16.0	10.0	300	5.5 … 30.0	125		●			●		●	TO252-5 (DPAK 5-leg)
BTS50080-1TEB	High-current PROFET™	8.0	16.0	10.0	300	5.5 … 30.0	125		●			●	●	●	TO252-5 (DPAK 5-leg)
AUIPS7111S	High-current PROFET™	6.0	15.0	15.0	–	8.0 … 50.0	45	●	●		●		●		TO-263-5 (D^2PAK 5-leg)
BTS50055-1TMA	High-current PROFET™	6.0	11.0	17.0	1500	5.0 … 34.0	130		●			●	●		TO263-7 (D^2PAK 7-leg)
BTS50055-1TMB	High-current PROFET™	6.0	11.0	17.0	1500	5.0 … 34.0	130		●			●	●		TO220-7-11
BTS50055-1TMC	High-current PROFET™	6.0	11.0	17.0	1500	5.5 … 34.0	130			●		●	●		TO263-7 (D^2PAK 7-leg)
AUIR3316S	High-current PROFET™	5.5	13.5	16.0	–	6.0 … 26.0	120		●		●		●		TO-263-5 (D^2PAK 5-leg)
AUIR3320S	High-current PROFET™	3.3	6.5	22.0	–	6.0 … 26.0	75		●		●		●		TO-263-5 (D^2PAK 5-leg)

1) See packages on page 134 to 136

Current sense, voltage input

Product name	Product family	$R_{DS(on)}$ (typ) [mΩ]	$R_{DS(on)}$ (max) @ T_j = 150°C [mΩ]	Nominal load current [A]	E_{AS} [mJ]	Operating voltage range [V]	$I_{L(SC)}$ (typ) [A]	Number of channels	Load current		Overvoltage shutdown	Sense enable	Open-load in OFF	Latch	24 V	ReverSave™	Package[1]
									Limit	Trip							
Automotive grade																	
BTS5200-4EKA	PROFET™+ 12V	200.0	400.0	4 x 0.8	50 @ 0.5 A	5.0 … 28.0	7.3	4	●			●	●				DSO-14 EP
BTS40k2-1EJC	Classic PROFET™	200.0	400.0	1.5	20 @ 1 A	5.0 … 36.0	5	1	●			●	●		●		DSO-8
BTT6200-4EMA	PROFET™+ 24V	200.0	400.0	4 x 1.0	20 @ 1 A	5.0 … 48.0	11	4	●			●	●	●	●		SSOP-24
BTT6200-1EJA	PROFET™+ 24V	200.0	400.0	1.5	20 @ 1 A	5.0 … 48.0	11	1	●			●	●	●	●		DSO-8 EP
BTS5200-1EJA	PROFET™+ 12V	200.0	400.0	1.5	40 @ 1 A	5.0 … 48.0	11	1	●			●	●				DSO-8
BTS5180-2EKA	PROFET™+ 12V	180.0	360.0	2 x 1.0	30 @ 1 A	5.0 … 48.0	12	2	●			●	●				DSO-14 EP
BTS5120-2EKA	PROFET™+ 12V	120.0	240.0	2 x 1.0	15 @ 2 A	5.0 … 48.0	12	2	●			●	●				DSO-14 EP
BTT6100-2EKA	PROFET™+ 24V	100.0	200.0	2 x 2.2	36 @ 1.5 A	5.0 … 48.0	25	2	●			●	●	●	●		DSO-14 EP
BTS5090-2EKA	PROFET™+ 12V	90.0	180.0	2 x 2.0	42 @ 3 A	5.0 … 28.0	32	2	●			●	●				DSO-14 EP
BTS5090-1EJA	PROFET™+ 12V	90.0	180.0	2.5	42 @ 3 A	5.0 … 28.0	32	1	●			●	●				DSO-8 EP
BTS6110-1SJA	PROFET™ motorcycle	80.0	200.0	2.0	N/A	8.0 … 24.0	27	1	●					●			DSO-8
NEW BTS7080-2EPA	PROFET™+ 2	20.9	39.6	2 x 3.0	36 @ 6 A	3.1 … 28.0	36	2		●		●	●			●	TSDSO-14 EP
BTF6070-2EKV	PROFET™+ 24V	60.0	135.0	2 x 2.3	40 @ 2 A	5.0 … 48.0	11	2	●			●	●	●	●		DSO-14 EP
BTT6050-1EKA	PROFET™+ 24V	50.0	100.0	4.5	55 @ 4 A	5.0 … 48.0	47	1	●			●	●	●	●		DSO-14 EP
BTT6050-2EKA	PROFET™+ 24V	50.0	100.0	2 x 3.0	55 @ 4 A	5.0 … 48.0	47	2	●			●	●	●	●		DSO-14 EP
BTS5045-2EKA	PROFET™+ 12V	45.0	90.0	2 x 2.5	35 @ 4 A	5.0 … 28.0	32	2	●			●	●				DSO-14 EP
BTS5045-1EJA	PROFET™+ 12V	45.0	90.0	3.0	35 @ 4 A	5.0 … 28.0	32	1	●			●	●				DSO-8 EP
NEW BTS7040-2EPA	PROFET™+ 2	19.0	36.0	2 x 3.5	36 @ 7 A	3.1 … 28.0	46	2		●		●	●			●	TSDSO-14 EP

1) See packages on page 134 to 136

www.infineon.com/profet

Downloaded from Arrow.com.

Protected high-side switches PROFET™

Current sense, voltage input (cont'd)

	Product name	Product family	$R_{DS(on)}$ (typ) [mΩ]	$R_{DS(on)}$ (max) @ T_j = 150°C [mΩ]	Nominal load current [A]	E_{AS} [mJ]	Operating voltage range [V]	$I_{L(SC)}$ (typ) [A]	Number of channels	Load current		Overvoltage shutdown	Sense enable	Open-load in OFF	Latch	24 V	ReverSave™	Package[1]
										Limit	Trip							
	Automotive grade																	
	BTT6030-2EKA	PROFET™+ 24V	30.0	64.0	2 x 4 0	50 @ 4 A	5.0 … 48.0	70	2	●			●	●	●	●		DSO-14 EP
	BTT6030-1EKA	PROFET™+ 24V	30.0	64.0	6.0	50 @ 6 A	5.0 … 48.0	70	1	●			●	●	●	●		DSO-14 EP
	BTT6030-2EKB	PROFET™+ 24V	30.0	62.0	2 x 4.0	85 @ 4 A	5.0 … 48.0	50	2	●			●	●	●	●		DSO-14 EP
	BTS5030-2EKA	PROFET™+ 12V	30.0	60.0	2 x 3.0	50 @ 6 A	5.0 … 28.0	47	2	●			●	●				DSO-14 EP
	BTS5030-1EJA	PROFET™+ 12V	30.0	60.0	4.0	50 @ 6 A	5.0 … 28.0	47	1	●			●	●				DSO-8 EP
	BTS740S2	Classic PROFET™	27.0	60.0	4.3	370 @ 5.5 A	5.0 … 34.0	50	2	●		●						DSO-20
	BTS640S2G	Classic PROFET™	27.0	60.0	4.5	410 @ 12.6 A	5.0 … 34.0	50	1	●		●						TO-263-7-1
NEW	BTS7030-2EPA	PROFET™+ 2	13.5	25.0	2 x 4.5	38 @ 9 A	3.1 … 28.0	60	2		●		●	●			●	TSDSO-14 EP
	BTT6020-1EKA	PROFET™+ 24V	20.0	42.0	7.0	100 @ 7 A	5.0 … 48.0	74	1	●			●	●	●	●		DSO-14 EP
	BTS5020-2EKA	PROFET™+ 12V	20.0	40.0	2 x 4.0	75 @ 6 A	5.0 … 28.0	65	2	●			●	●				DSO-14 EP
	BTS5020-1EKA	PROFET™+ 12V	20.0	40.0	5.0	74 @ 6 A	5.0 … 28.0	65	1	●			●	●				DSO-14 EP
NEW	BTS7020-2EPA	PROFET™+ 2	12.7	23.7	2 x 5.0	42 @ 10 A	3.1 … 28.0	71	2		●		●	●			●	TSDSO-14 EP
	BTS5016-2EKA	PROFET™+ 12V	16.0	32.0	2 x 5.0	95 @ 7 A	5.0 … 28.0	65	2	●			●	●				DSO-14 EP
	BTS5016-1EKB	PROFET™+ 12V	16.0	32.0	6.0	95 @ 7 A	5.0 … 28.0	65	1	●			●	●				DSO-14 EP
NEW	BTS7012-2EPA	PROFET™+ 2	11.5	21.5	2 x 6.0	42 @ 12 A	3.1 … 28.0	73	2		●		●	●			●	TSDSO-14 EP
	BTS5012-1EKB	PROFET™+ 12V	12.0	24.0	8.0	110 @ 10 A	5.0 … 28.0	65	1	●			●	●				DSO-14 EP
NEW	BTS7010-2EPA	PROFET™+ 2	9.5	19.5	2 x 6.5	55 @ 13 A	3.1 … 28.0	77	2		●		●	●			●	TSDSO-14 EP
	BTS5010-1EKB	PROFET™+ 12V	10.0	20.0	9.0	155 @ 10 A	5.0 … 28.0	65	1	●			●	●				DSO-14 EP
	BTT6010-1EKA	PROFET™+ 24V	10.0	22.0	9.0	100 @ 8 A	5.0 … 48.0	115	1	●			●	●	●	●		DSO-14 EP
	BTT6010-1EKB	PROFET™+ 24V	10.0	22.0	9.0	100 @ 8 A	5.0 … 48.0	86	1	●			●	●	●	●		DSO-14 EP
	BTS7008-1EPP[2]	High-current PROFET™	9.5	16.0	11.0	N/A	3.1 … 28.0	82.5	1		●		●	●	●		●	TSDSO-14 EP
NEW	BTS7008-2EPA	PROFET™+ 2	9.0	16.0	2 x 7.5	75 @ 15 A	3.1 … 28.0	82	2		●		●	●			●	TSDSO-14 EP
	BTS5008-1EKB	PROFET™+ 12V	8.0	16.0	10.0	160 @ 11 A	5.0 … 48.0	65	1	●			●	●				DSO-14 EP
	BTS7008-2EPP[2]	High-current PROFET™	9.5	16.0	2 x 7.5	N/A	3.1 … 28.0	N/A	2		●		●	●	●		●	TSDSO-14 EP
	BTS50080-1EGA	High-current PROFET™	8.0	16.0	13.0	125 @ 50 A	5.0 … 48.0	150	1		●		●	●	●		●	DSO-12
	BTS7006-1EPP[2]	High-current PROFET™	7.2	12.0	12.5	N/A	3.1 … 28.0	101	1		●		●	●	●		●	TSDSO-14 EP
	BTS50060-1EGA	High-current PROFET™	6.0	12.0	15.0	170 @ 50 A	5.0 … 48.0	150	1		●		●	●	●		●	DSO-12
	BTS50060-1TEA	High-current PROFET™	6.0	12.0	13.5	280 @ 20 A	5.0 … 48.0	75	1		●			●	●			TO-252-5 (DPAK 5-leg)
	BTF50060-1TEA[3]	High-current PROFET™	6.0	12.0	13.5	280 @ 20 A	5.0 … 48.0	75	1		●			●	●			TO-252-5 (DPAK 5-leg)
	BTS50050-1EGA	High-current PROFET™	5.0	10.0	16.0	200 @ 50 A	5.0 … 48.0	150	1		●		●	●	●		●	DSO-12
NEW	BTS7004-1EPP	High-current PROFET™	4.4	8.0	15.0	N/A	3.1 … 28.0	113	1		●		●	●	●		●	TSDSO-14 EP
	BTS50040-2SFA	High-current PROFET™	4.0	8.2	2 x 11.0	411 @ 20 A	5.0 … 48.0	160	2		●		●		●		●	DSO-36
	AUIR3330S	High-current PROFET™	3.0	6.2	23.0	N/A	5.0 … 48.0	70	1		●				●			T0263-7 (D^2PAK 7-leg)
	AUIR33402S	High-current PROFET™	3.0	6.2	23.0	N/A	5.0 … 48.0	70	1		●				●			T0263-7 (D^2PAK 7-leg)
	BTS50025-1TAD	Power PROFET™	2.5	5.0	25.0	1050 @ 25 A	5.5 … 28.0	70	1		●				●		●	T0263-7-3
	BTS50020-1TAD	Power PROFET™	2.0	4.0	29.0	1700 @ 29 A	5.5 … 28.0	100	1		●				●		●	T0263-7-3
	BTS50015-1TAD	Power PROFET™	1.5	3.0	33.0	3000 @ 33 A	5.5 … 28.0	135	1		●				●		●	T0263-7-3
	BTS50010-1TAD	Power PROFET™	1.0	2.0	40.0	3000 @ 40 A	5.5 … 28.0	150	1		●				●		●	T0263-7-3

1) See packages on page 134 to 136
2) Coming Q3/2018
3) Speed PROFET™, capable for PWM up to 25 kHz

Downloaded from Arrow.com.



SPI power controller SPOC™+2

SPOC™+2 devices are high-side smart power multichannel switches providing embedded protection diagnosis and intelligence. They are specially designed for standard exterior lighting in automotive applications, but can be used for further automotive and industrial applications such as heating, motor driving or power distribution.

Integration helps reducing the complexity of electronics, allowing board space reduction and decreasing the need of external components. Control, configuration and diagnosis are carried out via a Serial Peripheral Interface (SPI), which saves I/Os on the microcontroller and provides flexibility for the solution.

Features

- **Protection features:** absolute and dynamic temperature limitation with controlled restart, overcurrent protection (tripping) with programmable restart control and current threshold, undervoltage shutdown, overvoltage protection with external components
- **Diagnostic features:** proportional load current sense, open load in ON and OFF state, short circuit to ground and battery, diagnosis feedback via SPI
- **Functional safety features:** limp home mode, monitoring of input pin status (IN and LHI), checksum verification of control registers, current sense verification mode

Application focus

High-side switch with diagnosis and embedded protection function for automotive applications suitable for:

- Resistive, inductive and capacitive loads to replace electromechanical relays, fuses and discrete circuits
- Capable to drive high inrush current loads such as lamps, HIDs or LED modules

System benefit vs. discrete solution

- **PCB area savings:** 4–6 channel device with smallest package size and highest integrated feature set
- **Scalable solution:** same pinout as previous generation SPOC™+, family pin-out and footprint concept to support population variants
- **Load driving capability**: Up to 14 A nominal load current with parallel channel configuration. Best in class power dissipation to support most severe usage conditions, ReverSave™, -50 percent compared to PROFET™+ and -12 percent vs. PROFET™+2 .
- **Feature to cost:** I/O savings due to SPI, optimized feature set for PWMoverSPI, best in class kILIS, less external components required due to integrated kILIS range switch and simple GND network, functional safety features, cranking, external drive, channel parallelization, configurable slew rate, configurable overload threshold and programmable restart control, logic supply is 3.3 V compatible

www.infineon.com/spoc

Downloaded from Arrow.com.

SPI power controller SPOC™+2

Application diagram BTS72220-4ESE

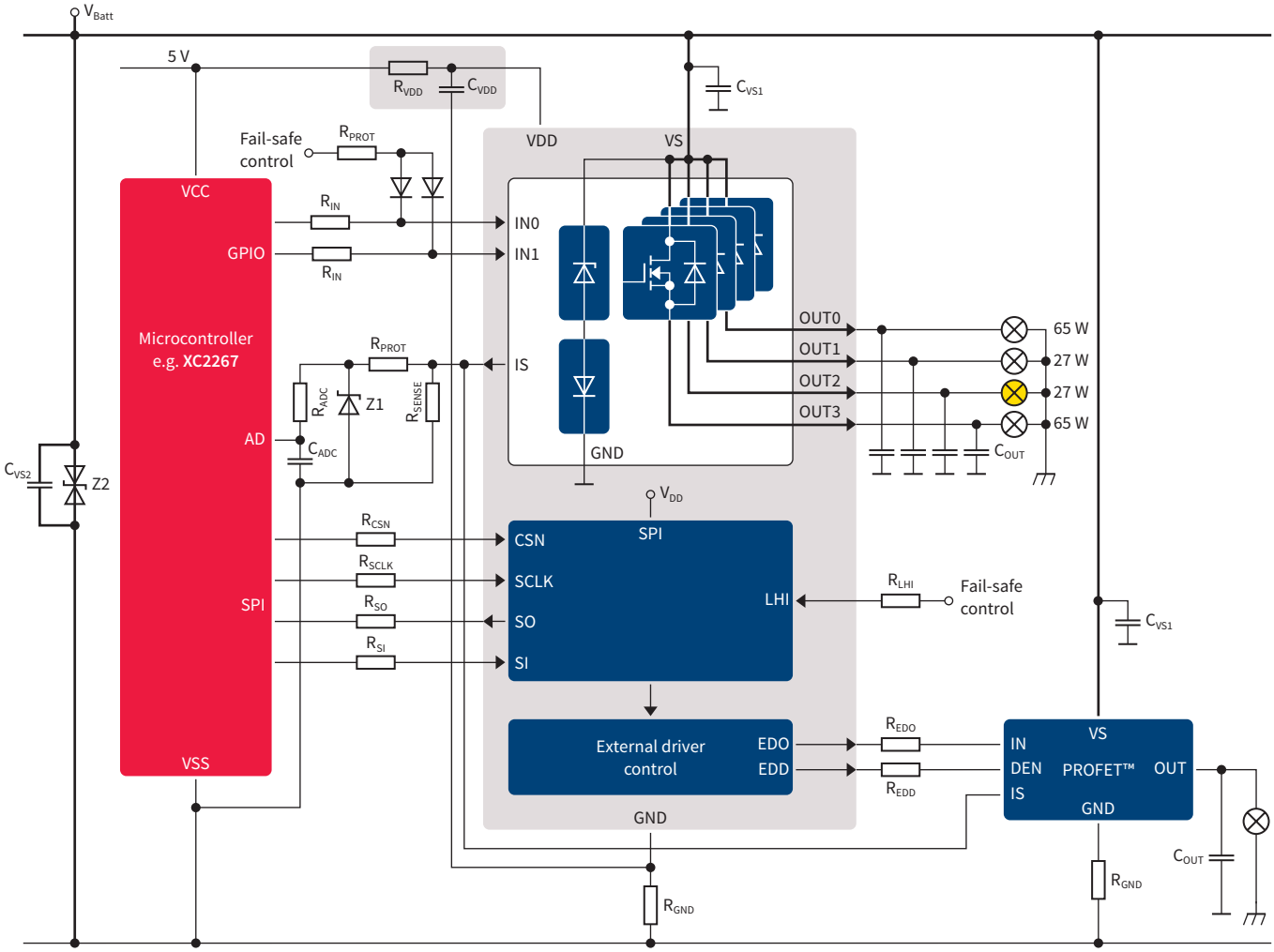

Portfolio

Product name	No of channels	Channel mix [mΩ]					Nominal load current[2]	$I_{L(SC)}$ (typ)	Ext. driver	Operating voltage	ReverSave™	Limp home	Package[1]
		HID H9 65 W	55 W	H8 42 W	27 W	10 W	[A]	[A]	[V]	[V]			
BTS72220-4ESA[3]	4	2 x 5.5	0	2 x 13.5	0	0	2 x 7 and 2 x 4	118/63		3.3…5	●	●	TSDSO-24
BTS72220-4ESE[3]	4	2 x 5.5	0	2 x 13.5	0	0	2 x 7 and 2 x 4	118/63	●	3.3…5	●	●	TSDSO-24
BTS71220-4ESA[3]	4	0	2 x 9.5	0	2 x 22.5	0	2 x 5 and 2 x 3	90/48		3.3…5	●	●	TSDSO-24
BTS71220-4ESE[3]	4	0	2 x 9.5	0	2 x 22.5	0	2 x 5 and 2 x 3	90/48	●	3.3…5	●	●	TSDSO-24
BTS71040-4ESA[4]	4	0	0	0	4 x 22.5	0	4 x 3	48		3.3…5	●	●	TSDSO-24
BTS71040-4ESE[4]	4	0	0	0	4 x 22.5	0	4 x 3	48	●	3.3…5	●	●	TSDSO-24
BTS71033-6ESA[4]	6	0	0	0	3 x 30.0	3 x 70	3 x 2.5 and 3 x 1.5	48/22		3.3…5	●	●	TSDSO-24

1) See packages on page 134 to 136
2) Chl. parallelization will double I_{Nom}
3) Coming Q4/2018
4) In development

Downloaded from Arrow.com.



LITIX™: Infineon® Automotive LED Driver

The LITIX™ – Infineon® Auto LED Driver is an enabler of protected and high-performing lighting applications in the automotive industry. In particular, the constant current regulation secures the stable brightness of the LED over the whole automotive temperature and voltage range.

Both the driver and LED are protected against overstress e.g. caused by voltage spikes or overtemperature. All kinds of load conditions are detected by its diagnostic features, such as open-load or shorted LED. All features are required to drive LEDs in harsh automotive environment conditions.

Features

- Constant output current, therefore constant brightness and extended LED lifetime
- Wide input voltage range
- Low drop voltage
- Open-load detection
- Overtemperature protection
- Short-circuit proof
- Reverse polarity proof
- Wide temperature range
- Very small SMD packages
- Automotive qualified

Applications

The Infineon automotive-optimized LED drivers address interior and exterior, low to high-power automotive LED applications such as: high and low beam, fog, DRL, position, tail, stop, CHMSL, RCL, reverse, turn indicator, dome, ambient lighting, status lamps etc.

LITIX™ – Infineon® Auto LED Driver consists of 4 sub-families

LITIX™ Basic

- Flexible linear current source family with scalable feature set

LITIX™ Linear

- BCR400 series is the most cost effective solution to drive low-power LED
- Linear current sources for low, medium and low-cost high-power applications

LITIX™ Power

- DC-DC converter and controller for medium to high-power applications

LITIX™ Power Flex

- Multitopology DC-DC controller for highest flexibility/ power applications

SPIDER+ LED – smart multichannel switches

For resistor based LED designs in rear lighting, the SPIDER+ LED family offers a cost optimized LED control either on a central BCM or on a decentralized electronics. The included diagnosis and protection functions enable the use of the smallest possible wire diameter.

AEC Qualified

RoHS

www.infineon.com/litix

Downloaded from Arrow.com.

LITIX™ Linear

BCR400 series is the most cost effective solution to drive low power LED

Block diagram BCR42x-U

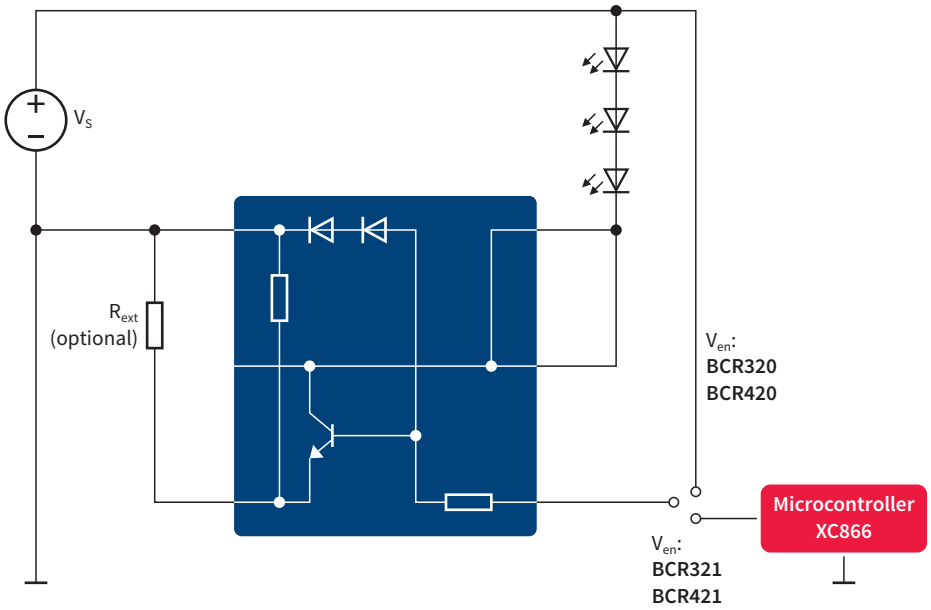

Product overview

Product name	Output current (max) [mA]	Adjustable output current	Supply voltage (max) [V]	Inhibit	PWM enable	P_{tot} [mW]	Package[1)]
BCR401U	65	●	40			750	SC74
BCR401W	65	●	18			500	SOT343
BCR402U	65	●	40			750	SC74
BCR402W	65	●	18			500	SOT343
BCR405U	65	●	40			750	SC74
BCR320U	250	●	27			1000	SC74
BCR321U	250	●	27	●	●	1000	SC74
BCR420U	150	●	40			1000	SC74
BCR421U	150	●	40	●	●	1000	SC74

1) See packages on page 134 to 136

Downloaded from Arrow.com.

Linear current sources for low to medium power applications

LED drivers designed to supply constant current up to 500 mA and with an external transistor of up to 2.5 A. This enables constant LED brightness and ensures extended LED lifetime, regardless of the supply voltage or LED forward voltage class.

Application diagram TLD1211SJ

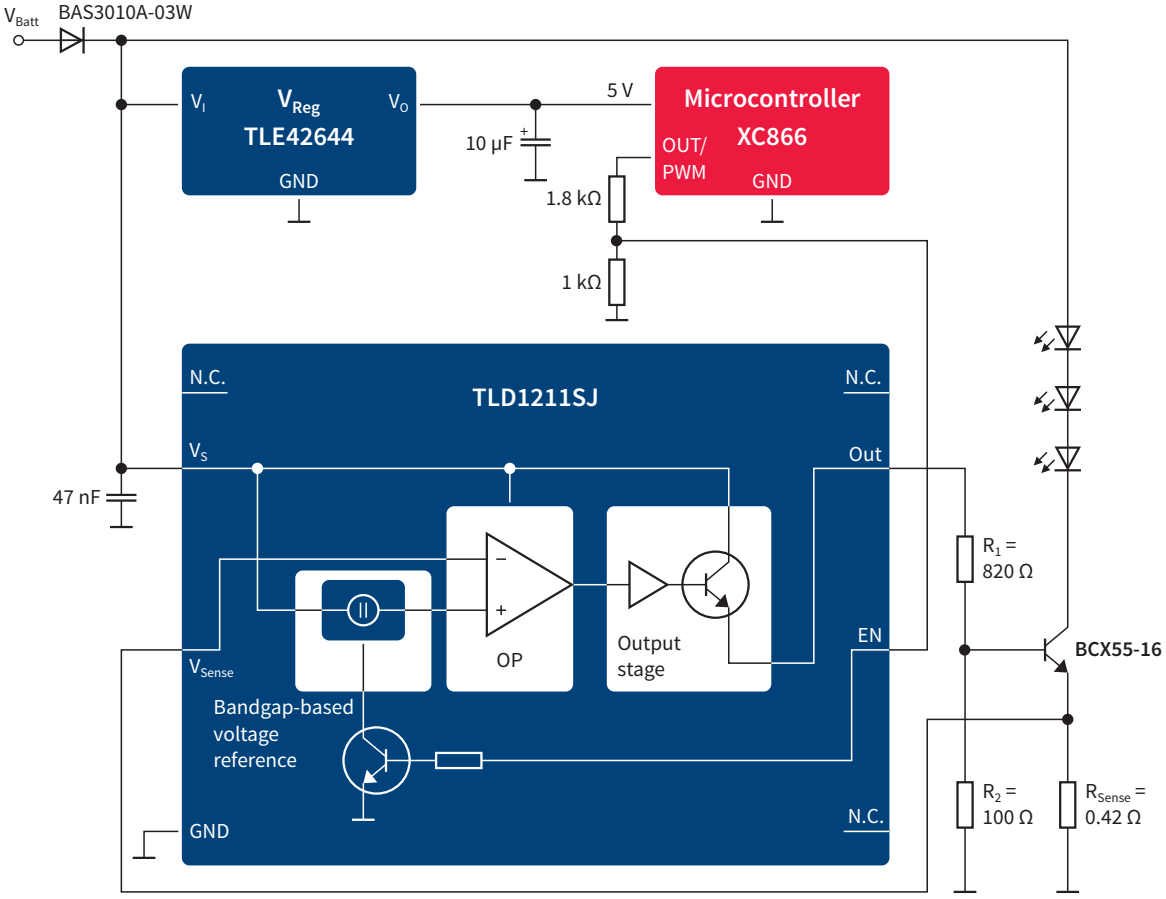

Product overview

Product name	Output current (max) [mA]	Adjustable	Driver for external transistor	Open-load detection	PWM/enable input	Adjustable high/low current switch	Package[1)]
TLD1211SJ	85	●	●		●		DSO-8
TLE4241GM	60	●		●	●	●	DSO-8
TLE4242EJ	250	●		●	●		DSO-8 EP
TLE4242G	450	●		●	●		TO263-7 (D²PAK 7-leg)

1) See packages on page 134 to 136

www.infineon.com/litix-linear

Downloaded from Arrow.com.

LITIX™ Basic

Flexible linear current source family with scalable feature set

Infineon LITIX™ Basic LED drivers are optimized for the control of low to medium power LEDs in automotive applications. The whole family of linear constant current sources offers footprint compatibility ranging from 1 to 3 output channels and 60–180 mA and enables stable and reliable LED brightness by precise current control.

Its diagnostics and logic feature set enables improved system reliability by significant component reduction on board level, improved system protection (e.g. against ISO pulses), as well as an energy optimized system solution (DC-DC control).

Application diagram TLD2314EL

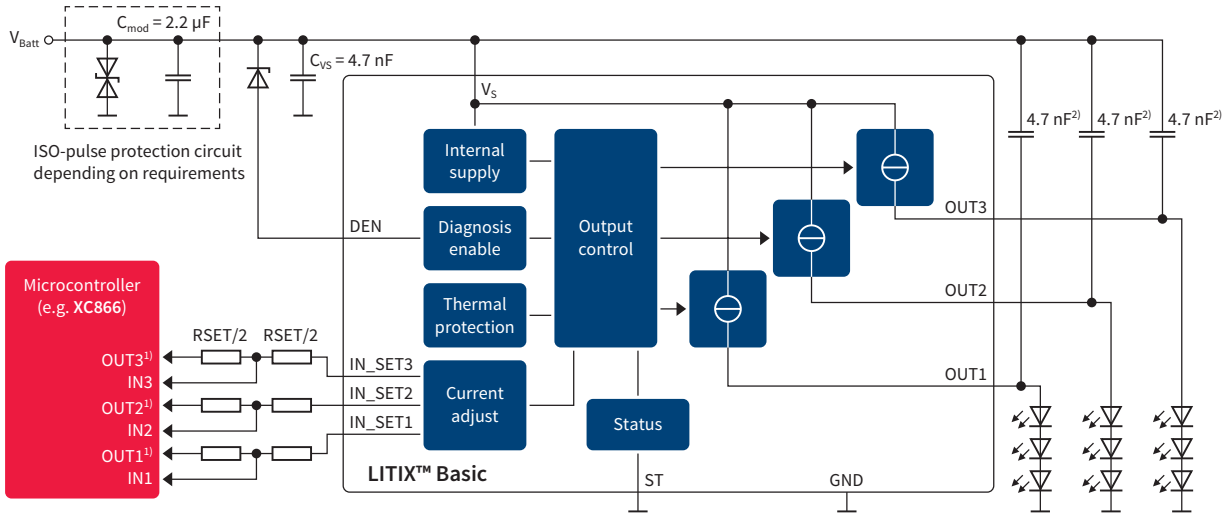

1) Open drain
2) For EMI improvement, if required

Product overview

Product name	1 IN 1 OUT	1 IN 3 OUT	3 IN 3 OUT	Output current (typ) mA per channel	PWMI	N - 1	OL and SC detection	OL and SC with double fault detection	DEN	Matrix	Package[1]
TLD1120EL	●			180							SSOP-14 EP
TLD1310EL		●		60							SSOP-14 EP
TLD2310EL			●	60							SSOP-14 EP
TLD1312EL		●		60	●						SSOP-14 EP
TLD1311EL		●		60		●					SSOP-14 EP
TLD1121EL	●			180			●				SSOP-14 EP
TLD2311EL			●	60			●				SSOP-14 EP
TLD1313EL		●		60				●			SSOP-14 EP
TLD1124EL	●			180			●		●		SSOP-14 EP
TLD1314EL		●		60			●		●		SSOP-14 EP
TLD2314EL			●	60			●		●		SSOP-14 EP
TLD1125EL	●			180	●		●				SSOP-14 EP
TLD1315EL		●		60	●	●	●				SSOP-14 EP
TLD1326EL		●		60	●	●				●	SSOP-14 EP
TLD2326EL			●	60			●			●	SSOP-14 EP

1) See packages on page 134 to 136

PWMI = Internal PWM dimming engine
N - 1 = Complete device deactivation during open-load
OL = Open-load diagnosis
SC = Short-circuit diagnosis
DEN = Diagnosis Enable input
Matrix = Feedback to DC-DC to optimize efficiency

www.infineon.com/litix-basic

Downloaded from Arrow.com.

LITIX™ Power

DC-DC converter and controller for medium and high-power applications

Increasingly, LED lighting solutions are used in the front area of the car, especially in the premium segment of the market. LED frontlight solutions are usually implemented using several discrete LEDs in one chain which leads to a string voltage of up to 60 V, or using fewer LEDs with a high forward current up to 3 A or even more. Both implementations require DC-DC solutions – either boost, buck or buck-boost architectures are needed. The LITIX™ Power family consists of DC-DC devices which perfectly fulfill these requirements.

Application diagram TLD5098EL in boost mode with short-to-ground protection

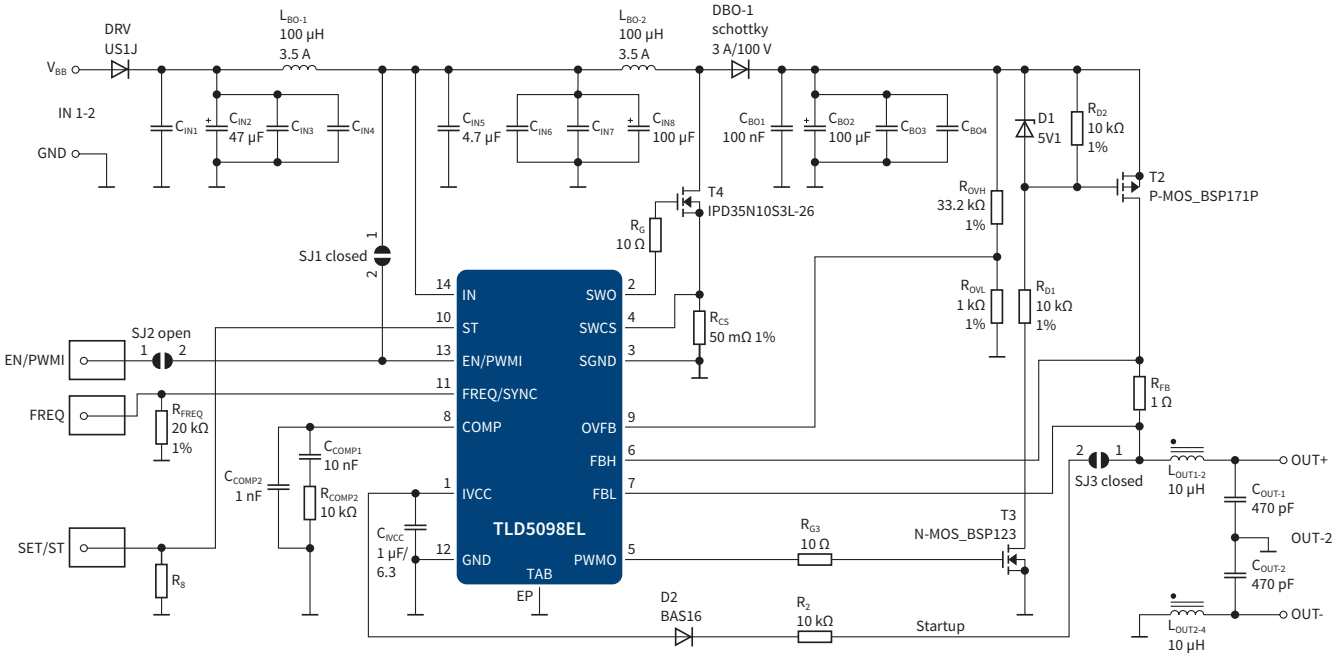

Product overview

Product name	Topology	Power stage	Current (max) [A]	V_{IN} range [V]	V_{OUT} (max) [V]	LED current dimming		Package[1]
						Digital (PWM)	Analog	
TLD5045EJ	Buck converter	Internal	0.70	5.00 … 40.00	40	Yes	Yes	DSO-8 EP
TLD5095EL	Multitopology controller IC buck, boost, buck-boost, SEPIC, flyback	External	Dependent on external MOSFET	4.75 … 45.00	45	Yes	No	SSOP-14 EP
TLD5097EL	Multitopology controller IC buck, boost, buck-boost, SEPIC, flyback	External	Dependent on external MOSFET	4.50 … 45.00	60	Yes[2]	Yes	SSOP-14 EP
TLD5098EL	Multitopology controller IC buck, boost, buck-boost, SEPIC, flyback	External	Dependent on external MOSFET	4.50 … 45.00	60	Yes	Yes	SSOP-14 EP
TLD5190QV	Synchronous H-bridge	External	Dependent on external MOSFET	4.50 … 40.00	55	Yes	Yes	VQFN-48
TLD5190QU[3]	Synchronous H-bridge	External	Dependent on external MOSFET	4.50 … 40.00	55	Yes	Yes	TQFP-48 EP

1) See packages on page 134 to 136
2) No dedicated Gate driver. Digital dimming done via main switch.
3) Coming Q2/2018

www.infineon.com/litix-power

Downloaded from Arrow.com.

LITIX™ Power Flex

Synchronous DC-DC controller for high-current, high-power and cost optimized applications

LEDs are the big enabler in automotive front lighting, supporting new design possibilities, energy savings and new applications like matrix or laser high beam. These trends come with the demand for flexible DC-DC driver solutions for driving LED systems of even more than 50 W – or LEDs in configurations with currents of even more than 3 A – with high efficiency.

The new LITIX™ Power Flex devices are the perfect answer to these new trends as their synchronous topologies are beneficial for driving high power LEDs with maximum system efficiency (well above 90 percent).

TLD5541-1QV is with its seamless buck-boost regulation and fast dynamic load jump behavior also an innovative solution for realizing cost optimized LED headlamps with complete protection and diagnosis features – e.g. by driving two, three or more separately switched LED loads in one string, with up to 55 V string voltage, with just one DC-DC.

The two dual channel devices TLD5541-2QV and TLD5501-2QV will perfectly complement the H-bridge device to a real powerful family. They offer additional flexibilities to realize high power applications or cost optimizes LED headlamps as they come with two individually controllable synchronous DC-DC channels and a broad variety of possible DC-DC topologies to choose from.

Application example TLD5541-1QV for cost optimized LED headlamp electronic

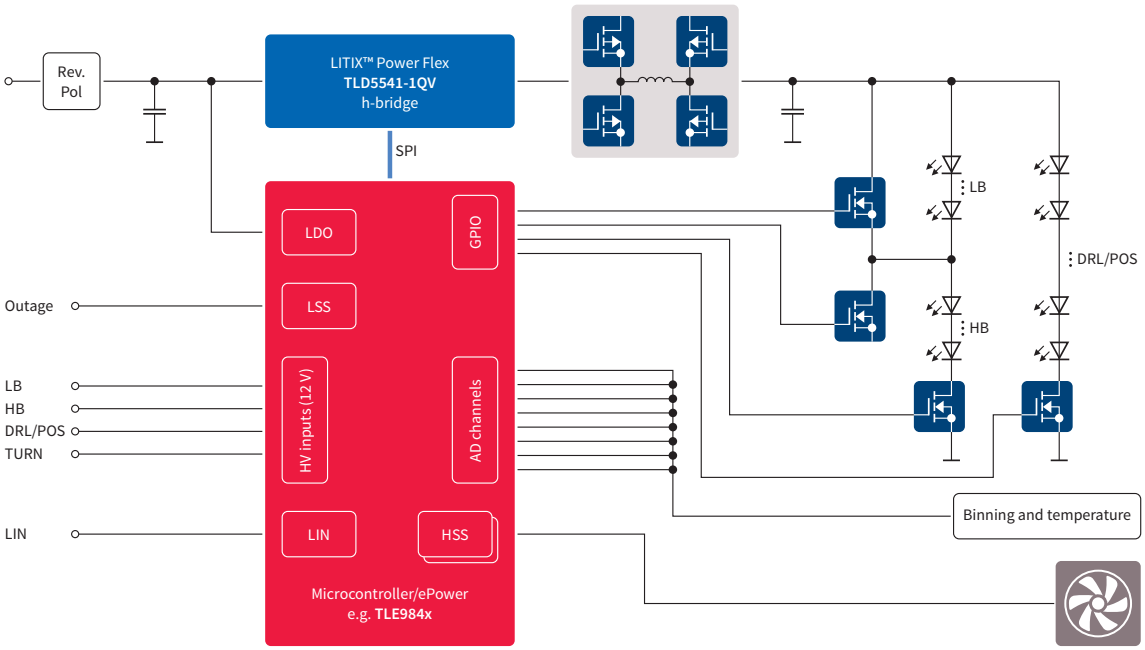

Product overview

	Product name	Topology	Power stage	Current (max) [A]	V_{IN} range [V]	V_{OUT} (max) [V]	Package[1]
	TLD5541-1QV	Synchronous H-bridge w / SPI	External	Depending on external MOSFET	4.50 … 40.00	55	VQFN-48
	TLD5541-1QU[2]	Synchronous H-bridge w / SPI	External	Depending on external MOSFET	4.50 … 40.00	55	TQFP-48 EP
NEW	TLD5541-2QV	Synchronous dual channel multitopology w / SPI	External	Depending on external MOSFET	4.50 … 40.00	55	VQFN-48
NEW	TLD5501-2QV	Synchronous dual channel buck w / SPI	External	Depending on external MOSFET	4.50 … 40.00	50	VQFN-48

1) See packages on page 134 to 136
2) Coming Q2/2018

www.infineon.com/litix-power

Downloaded from Arrow.com.

SPIDER+ LED

Smart multichannel switches

The SPIDER+ LED devices combine the feature set of the SPIDER+ family with additional features to drive small bulbs or LEDs. Beside one high-side channel device, three configurable devices support LED designs in the most cost efficient way with diagnosis and protection features.

Applications

› Single LEDs and small bulbs
› Resistor based LED light designs

Benefits

› Small wire diameter can be used due to 500 mA latched protection
› Two battery feeds for left/right supply
› Cost-efficient LED diagnosis & protection
› Fail safe operation mode

Key features

› SPIDER+ feature set
› Open load at ON diagnosis with tight threshold of 6 mA for TLE75620-EST to avoid LED glimming
› 2 additional PWM generators
› Bulb inrush mode to drive small bulbs

Resistor based rear light solutions with SPIDER+LED (TLE75080-ESH)

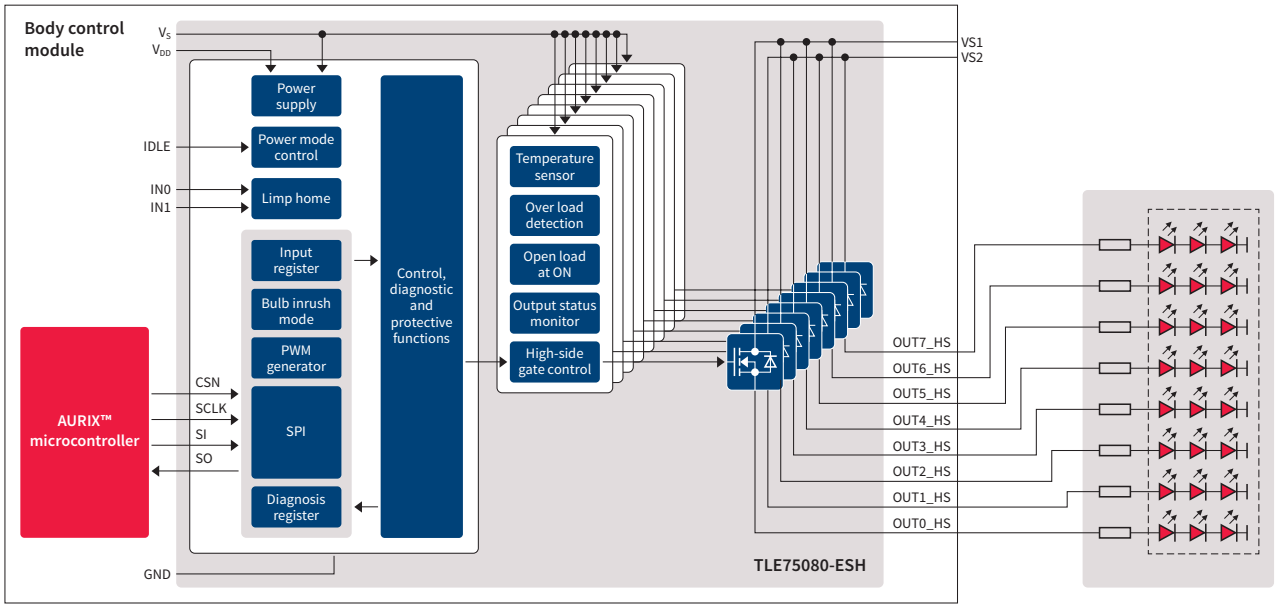

Product overview

	Product name	Configurable	High side	Low side	Cranking mode [V]	Limp home	LED driver OL @ ON, +2 add. PWM, bulb inrush	$R_{DS(on)}$ (typ) @ 25°C [mΩ]	$V_{DS(AZ)}$ (min) [V]	$I_{L(NOM)}$ [mA]	Energy capability (repetitive 1 x 10^6 cycles) [mJ]	Number of direct inputs	Package[1]
SPIDER+ LED	TLE75080-ESH		8		3	●	●	1.0	42	330	10	2	TSDSO-24 EP
	TLE75242-ESH	2	4	2	3	●	●	1.0	42	330	10	2	TSDSO-24 EP
	TLE75602-ESH	6		2	3	●	●	1.0	42	330	10	2	TSDSO-24 EP
	TLE75620-EST	6	2		3	●	●	1.0	42	330	10	2	TSDSO-24 EP

1) See packages on page 134 to 136

www.infineon.com/spider

Downloaded from Arrow.com.



Motor drivers: the right driver for every motor

The search for a solution to drive applications powered by low-voltage motors ends with Infineon. From 0.1 to 100 A, and from steppers to 3-phase drivers, we offer the right solution for every current range and application requirement.

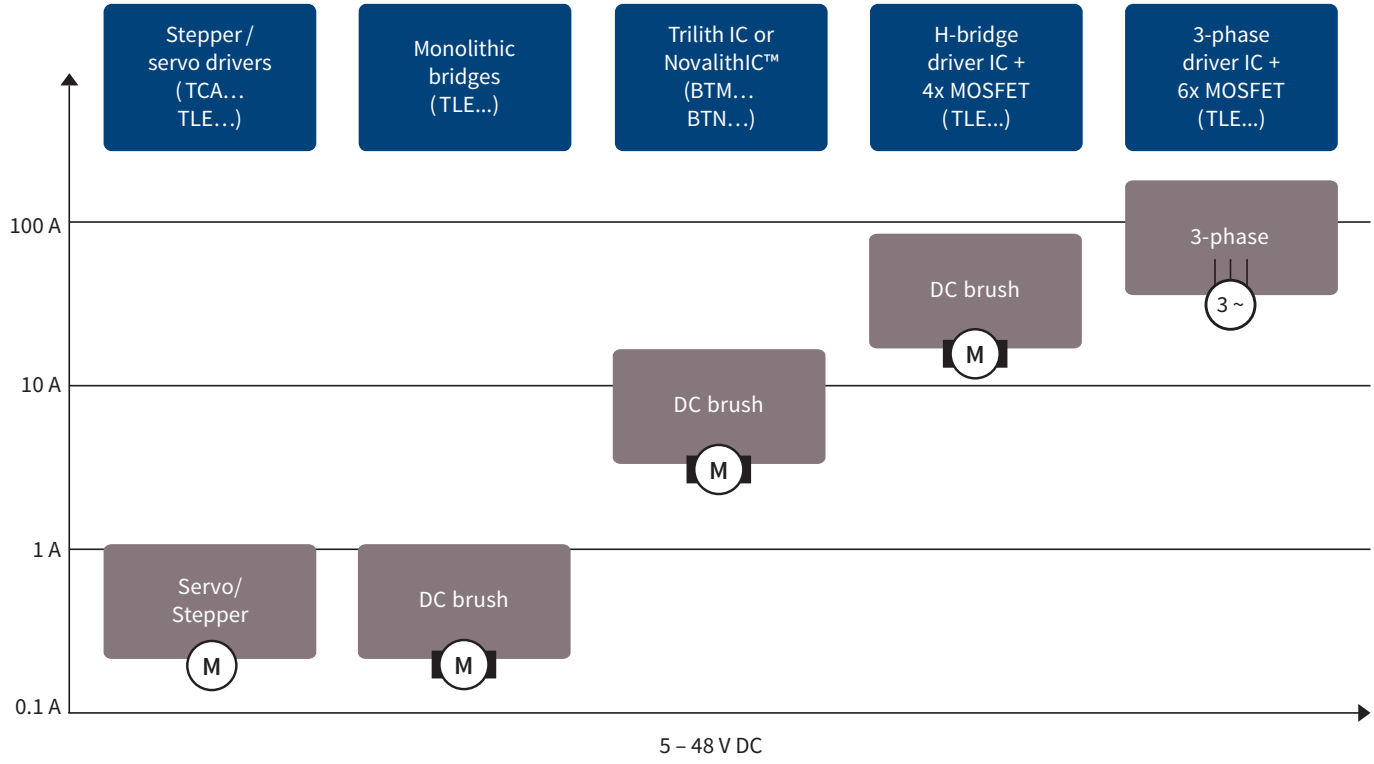

AEC Qualified

RoHS

www.infineon.com/bridges

Downloaded from Arrow.com.

Integrated low-current motor drivers

The Infineon low-current motor bridge family consists of a broad variety of bridges for stepper and DC brush motors including servo motors. They are designed for use in automotive and industrial applications. Typical applications are light leveling, HVAC flap control, and mirror adjustment.

The products are offered with protection features as well as diagnosis. Depending on the product type the protection ranges from basic protection against overtemperature to a full set of protection against open-load, overvoltage, undervoltage, overtemperature and short-circuit. The diagnosis capabilities range from a simple status flag to communication via a 16-bit SPI.

Stepper motor drivers

The TCA3727 and TLE4726 cover a broad range of applications from automotive to industry. The TLE4726 can be used in 24 V applications. TLE4729G is dedicated to automotive applications and offers additional protection compared to TLE4726G.

TLE4208G and TLE8444SL offer low cost solution for simple stepper motor applications. Only full- and half-step mode is possible.

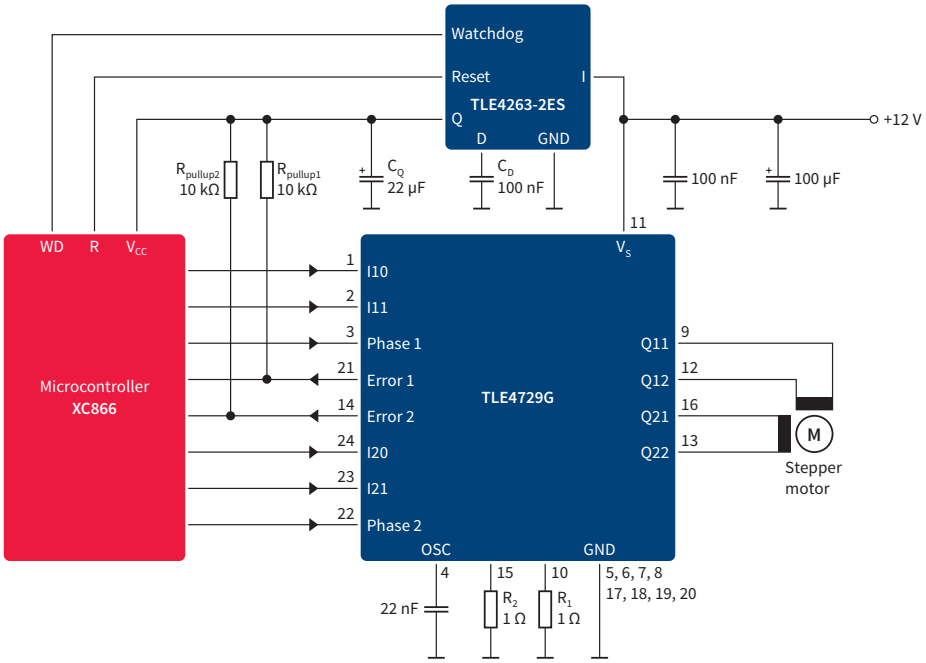

Product overview

Product name	$I_{L(NOM)}$ [A]	$I_{L(lim)}$ [A]	I_q [µA]	$V_{S(OP)}$ [V]	Step operations	Protection	Diagnostic interface	Highlights	Package[1]
Current controlled									
TCA3727G	2 x 0.75	2 x 1.50	200	5–50	Full to mini step	OT	–	High operating voltage, low quiescent current with inhibit	DSO-24
TLE4726G	2 x 0.75	2 x 1.50	200	5–50	Full to mini step	OT	–		DSO-24
TLE4729G	2 x 0.70	2 x 1.50	50	6–16	Full to mini step	OL, OT, SC	Status flag	Very low quiescent current with inhibit	DSO-24
Voltage controlled									
TLE4208G	4 x 0.80	4 x 1.50	20	8–18	Full to half-step	SC, OT, OV, UV	Status flag	Dual full bridge	DSO-28
TLE8444SL	4 x 0.50	4 x 0.90	1	8–18	Full to half-step	SC, OT, OV, UV, OL	Status flag	Open-load detection in ON-state	SSOP-24

1) See packages on page 134 to 136

LO = Lockout
OL = Open-Load
OV = Overvoltage
UV = Undervoltage
OT = Overtemperature
SC = Short-Circuit

www.infineon.com/dc-motor-bridges

Downloaded from Arrow.com.

Integrated low-current motor drivers

Servo drivers

The TLE4205, TLE4206 and TLE4209 are protected H-bridge drivers for automotive applications like headlight beam control and industrial servo control applications.

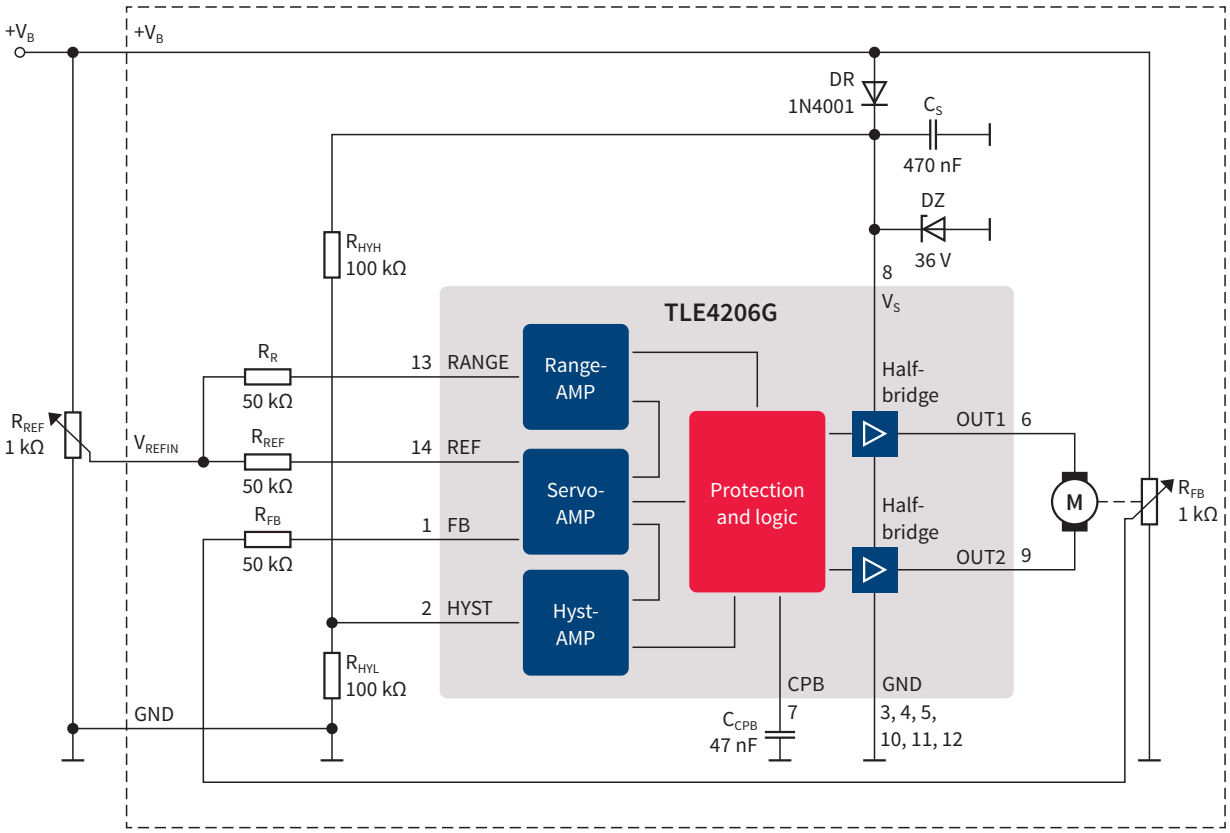

Product name	$I_{L(NOM)}$ [A]	$I_{L(lim)}$ [A]	I_q [µA]	$V_{S(OP)}$ [V]	Protection	Inhibit	Highlights	$V_{sat\ path}$	Package[1]
TLE4205G	0.60	1.00	0.10	6 … 32	SC	●	Dual power comparator for higher voltage	2.1 V at 0.6 A[2] supply voltage	DSO-20
TLE4206-2G	0.80	1.50	12.00	8 … 18	OT, OV, UV, LO, SC		Switching hysteresis on range input	1.2 V at 0.4 A[2]	DSO-14
TLE4209G	0.80	1.50	12.00	8 … 18			Servo driver	1.2 V at 0.3 A[2]	DSO-14

1) See packages on page 134 to 136
2) Total drop saturation voltage typ. value at 25°C and 0.4 A

LO = Lockout
OL = Open-Load
OV = Overvoltage
UV = Undervoltage
OT = Overtemperature
SC = Short-Circuit

Downloaded from Arrow.com.

Multi half-bridge driver ICs

The TLE94xyz as well as TLE4207G, TLE4208G and TLE6208-3/-6G are multipurpose bridges designed to driver DC brush motors with nominal load currents < 1 A for automotive and industrial applications.

The TLE94xyz is designed based on a family specification which supports platform designs where the number of motors may range from two to six or more.

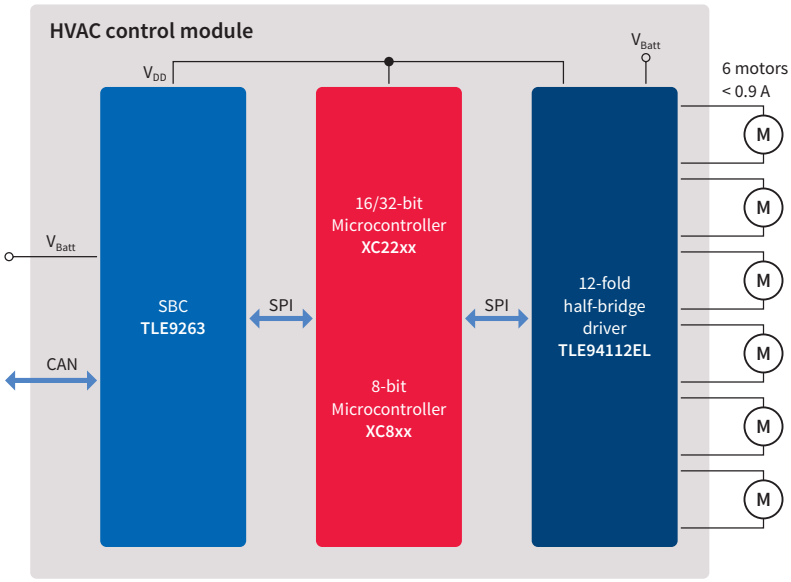

Basic features

- OV = Overvoltage
- UV = Undervoltage
- OT = Overtemperature
- SC = Short-Circuit

Product name	Config.	$I_{L(NOM)}$ [A]	$I_{L(lim)}$ [A]	I_q [µA]	$V_{S(OP)}$ [V]	Protection	Diagnostic interface	Highlights	$V_{CE(sat)}$ / $R_{DS(on)}$	Package[1]
TLE4207G	2x H-bridge	2 x 0.80	2 x 1.50	20	8 … 18	LO	Status flag	Error det.	1.2 V[2]	DSO-14
TLE8444SL	4x H-bridge	4 x 0.50	4 x 0.90	1	8 … 18	OL	Status flag	Open-load detection in ON-state	600 mΩ/switch	SSOP-24
TLE6208-3G	3x H-bridge	3 x 0.80	3 x 1.00	10	8 … 40	LO	16-bit SPI	Detailed diagnosis via SPI	800 mΩ[3]/switch	DSO-14
TLE6208-6G	6x H-bridge	6 x 0.80	6 x 1.00	12	8 … 40	LO	16-bit SPI	Single switch usage possible	800 mΩ[3]/switch	DSO-28
TLE94003EP[4]	3x H-bridge	3 x 0.30	3 x 0.90	0.6	5.5 … 21	OC, OT, VS UV/OV	Error flag	TLE94xyz family concept + small package	850 mΩ/switch	TSDSO-14 EP
TLE94103EP[4]	3x H-bridge	3 x 0.30	3 x 0.90	0.6	5.5 … 21	OC, OT, OL, VS UV/OV	16-bit SPI	TLE94xyz family concept + small package	850 mΩ/switch	TSDSO-14 EP
TLE94004EP[4]	4x H-bridge	4 x 0.30	4 x 0.90	0.6	5.5 … 21	OC, OT, VS UV/OV	Error flag	TLE94xyz family concept + small package	850 mΩ/switch	TSDSO-14 EP
TLE94104EP[4]	4x H-bridge	4 x 0.30	4 x 0.90	0.6	5.5 … 21	OC, OT, OL, VS UV/OV	16-bit SPI	TLE94xyz family concept + small package	850 mΩ/switch	TSDSO-14 EP
TLE94106EL	6x H-bridge	6 x 0.30	6 x 0.90	0.6	5.5 …21	OC, OT, OL, VS UV/OV	16-bit SPI	TLE94xyz family concept + backwards compatible to TLE84106EL	850 mΩ/switch	SSOP-24
TLE94108EL	8x H-bridge	8 x 0.30	8 x 0.90	0.6	5.5 …21	OC, OT, OL, VS UV/OV	16-bit SPI	TLE94xyz family concept	850 mΩ/switch	SSOP-24
TLE94110EL	10x H-bridge	10 x 0.30	10 x 0.90	0.6	5.5 …21	OC, OT, OL, VS UV/OV	16-bit SPI	TLE94xyz family concept + backwards compatible to TLE84110EL	850 mΩ/switch	SSOP-24
TLE94112EL	12x H-bridge	12 x 0.30	12 x 0.90	0.6	5.5 …21	OC, OT, OL, VS UV/OV	16-bit SPI	TLE94xyz family concept + 12 outputs in one package	850 mΩ/switch	SSOP-24

1) See packages on page 134 to 136
2) Total drop saturation voltage typ. value at 25°C and 0.4 A
3) $R_{DS(on)}$ is typical and specified at T_j = 25°C
4) Coming in Q1/2018

LO = Lockout
OC = Overcurrent
OL = Open-Load
OV = Overvoltage
UV = Undervoltage
OT = Overtemperature
VS = Voltage supply

www.infineon.com/dc-motor-bridges

Downloaded from Arrow.com.

Integrated high-current motor drivers

NovalithIC™/Trilith IC

A NovalithIC™ provides a complete low-ohmic-protected half-bridge in a single package. It can be combined with an additional NovalithIC™ to create an H-bridge or 3-phase bridge as well. The NovalithIC™ family has the capability to switch fast PWM signals while providing overcurrent, undervoltage and overtemperature protection. Current sense is available to monitor load current. The NovalithIC™ family offers cost-optimized solutions for protected high-current PWM motor drives with very low board-space consumption–scaled to your needs.

The Trilith IC family members combine two high-side and two low-side switches in one package. They are geared to driving high-current DC motors in an H-bridge configuration but can also be used as single independent switches. All Trilith ICs include overcurrent and overtemperature protection for the high-side switches. For the low-side switches the user can choose between unprotected switches as well as protected switches.

Selection tree – NovalithIC™ (BTNxxxx)/Trilith IC (BTMxxxx)

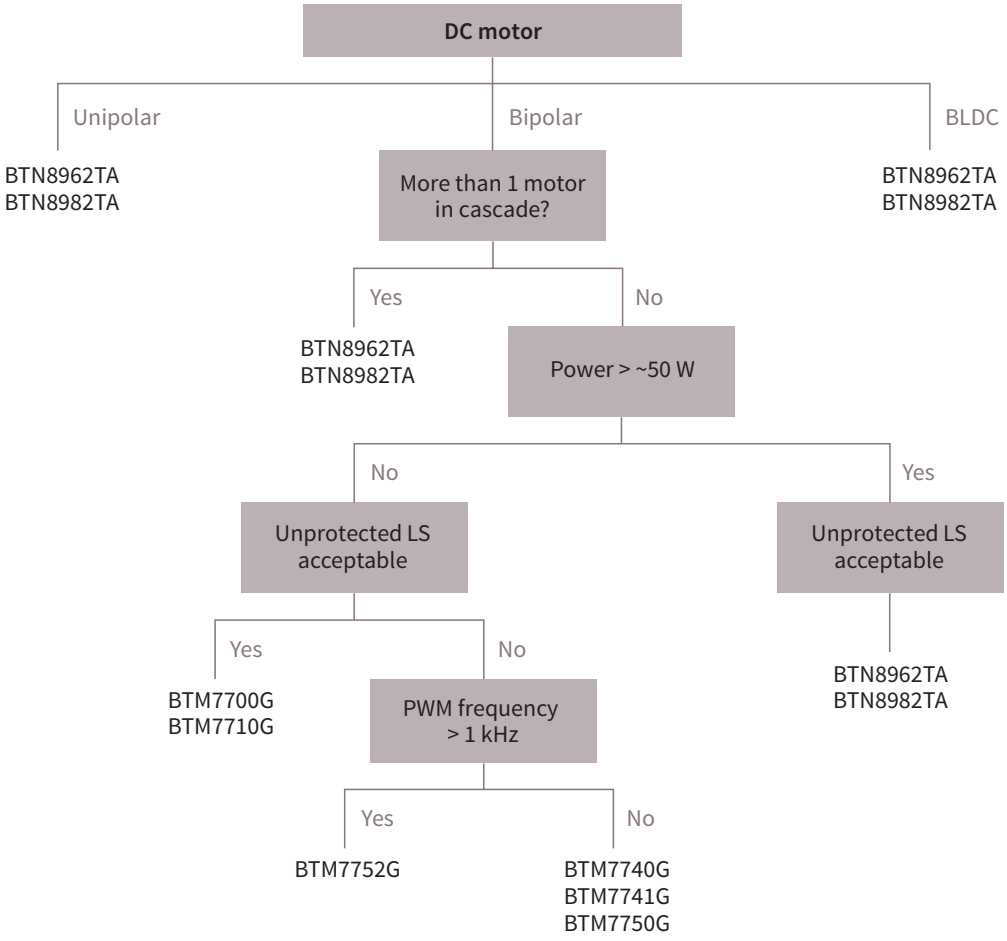

www.infineon.com/trilithic
www.infineon.com/novalithic

Downloaded from Arrow.com.

Trilith IC – integrated H-bridge

Basic features
- Low quiescent current
- Capable for high PWM frequency

Diagnostic features
- Overvoltage
- Overtemperature
- Short-circuit/overcurrent
- Current sense/status
- Open-load

Protection features
- Overvoltage
- Undervoltage
- Overtemperature
- Short-circuit/overcurrent

Application example Trilith IC

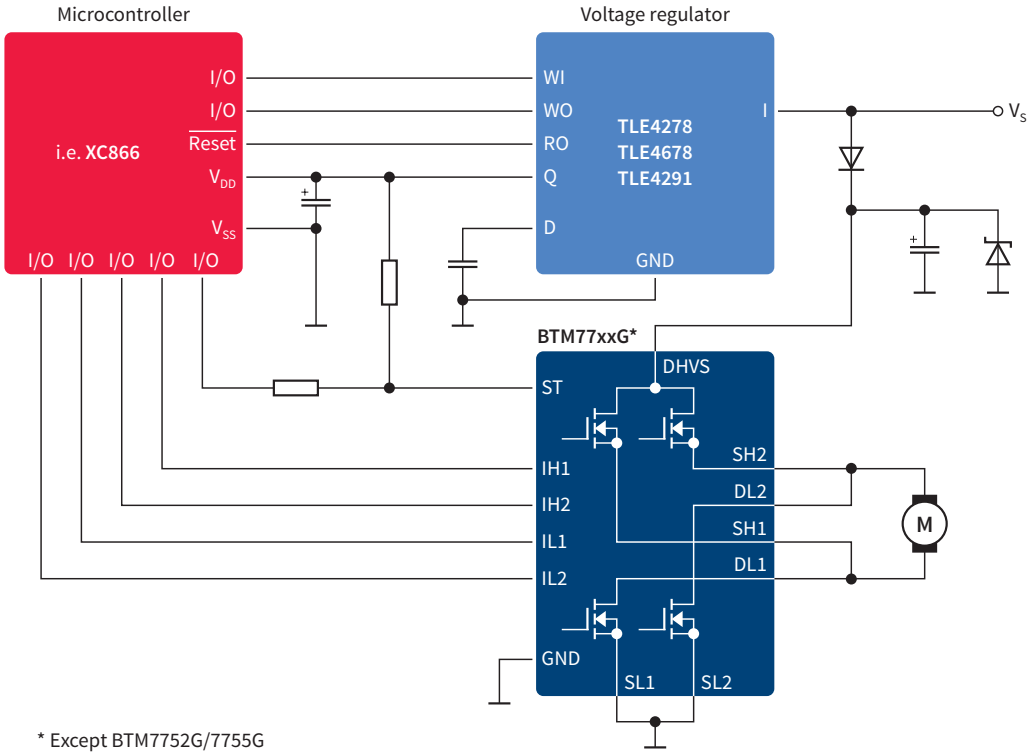

* Except BTM7752G/7755G

Trilith IC product overview

Product name	Operating range [V]	$R_{DS(on)}$ path (typ) @ 25°C [mΩ]	$I_{D(lim)}$ (typ) [A]	I_q (typ) [µA]	Switch freq. (typ) [kHz]	Diagnosis	Protect	Package[1)]
BTM7740G	4.80 … 42.00	210	8.00	5	1	OT	OT, SC	DSO-28
BTM7741G	4.80 … 42.00	210	8.00	5	1	OT, OL	OT, SC	DSO-28
BTM7700G	4.80 … 42.00	190	9.50	5	1	OT	OT, SC	DSO-28
BTM7750G	4.80 … 42.00	115	12.00	5	1	OT	OT, SC	DSO-28
BTM7710G	4.80 … 42.00	110	15.00	5	1	OT	OT, SC	DSO-28
BTM7752G	5.50 … 28.00	150	12.00	5	25	OV, OT, SC/OC, CS	OV, UV, OT, SC/OC	DSO-36

1) See packages on page 134 to 136

CS = Current Sense
OL = Open-Load
OV = Overvoltage
UV = Undervoltage
OT = Overtemperature
SC = Short-Circuit
OC = Overcurrent

www.infineon.com/trilithic

Downloaded from Arrow.com.

Half-bridge with integrated Driver IC

NovalithIC™ – integrated half-bridge

Basic features
- Low quiescent current
- Capable for high PWM frequency
- Logic level input
- Adjustable slew rate
- Cross current protection

Diagnostic features
- Overtemperature
- Undervoltage
- Overcurrent
- Current sense and status

Protection features
- Overtemperature shutdown
- Undervoltage
- Overcurrent

Application example NovalithIC™

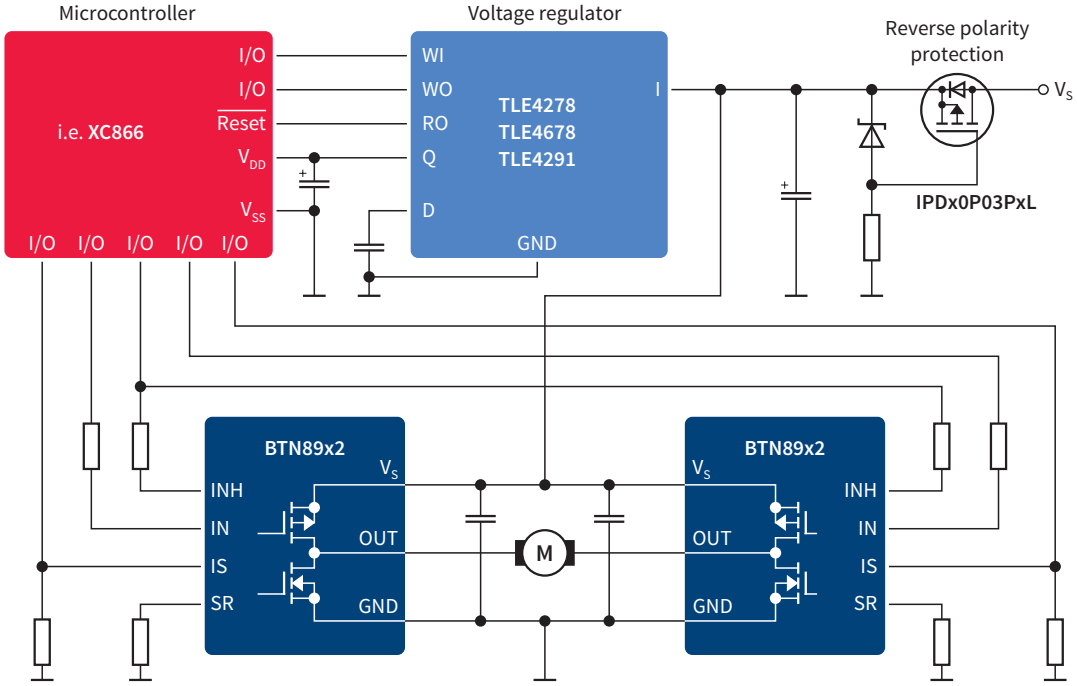

NovalithIC™ product overview

Product name	Operating range [V]	$R_{DS(on)}$ path (typ) [mΩ]	$I_{D(lim)}$ [A]	I_q (typ) [µA]	Switch time (typ) [µs]	Diagnosis	Protect	Package[1]
BTN8962TA	5.50 … 40.00	14.20	42	7	0.25	OT, OC, CS	UV, OT, OC	TO263-7 (D^2PAK 7-leg)
BTN8982TA	5.50 … 40.00	10.00	70	7	0.25	OT, OC, CS	UV, OT, OC	TO263-7 (D^2PAK 7-leg)

1) See packages on page 134 to 136

OC = Overcurrent
CS = Current Sense
UV = Undervoltage
OT = Overtemperature

Downloaded from Arrow.com.

Gate driver ICs for external MOSFETs

The trend towards greater efficiency in automotive applications also applies to electric motors. Applications such as power steering, HVAC compressors and engine cooling fans will be controlled by electronic motors in the future.

Infineon's family of configurable, H-bridge and 3-phase gate driver ICs can be combined with MOSFETs to provide the power and efficiency these systems demand.

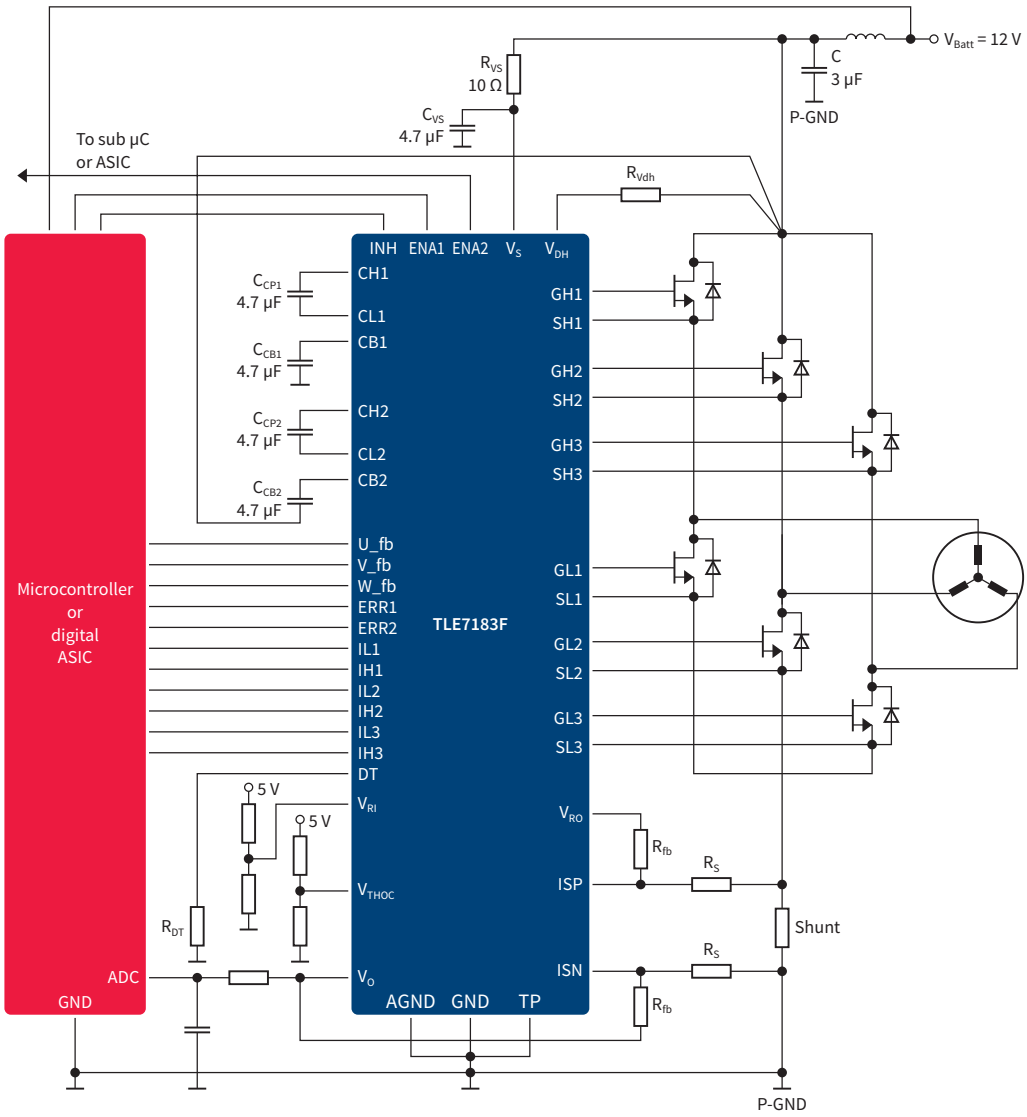

Applications

- Power steering
- Fan and pump control
- Starter alternator
- Seat belt pretensioner
- VVT
- Electric park brake
- ECMT
- E-turbo

Basic features

- Strong output stage up to 1.5 A
- Precise OpAmp for current shut monitoring
- Operation down to 5.5 V
- Duty cycle adjustable

www.infineon.com/driver-ic

Downloaded from Arrow.com.

Gate driver ICs for external MOSFETs

Selection tree – Gate drivers

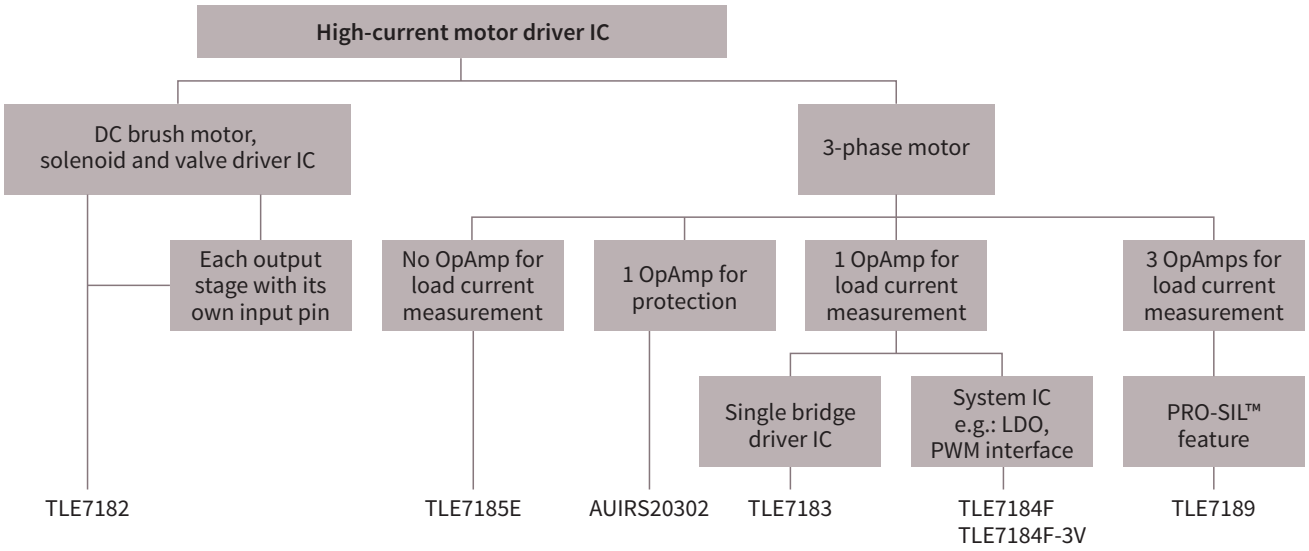

H-bridge/dual half-bridge drivers family

Product name	Operating range [V]	OpAmp	PWM/DIR input	Reverse polarity protection	Diagnosis	Package[1]
TLE7182EM	7 … 34	1		●	UV, OV, OC, SCD, OT	SSOP-24

3-phase bridge driver IC

Product name	Operating range [V]	Drives stage	D.C.-range @ 20 kHz [%]	Numbers of integrated OpAmps for load current measurement	Adjustable dead time	SIL3 features	Diagnosis	Package[1]
TLE7183F	5.50 … 28.00	1.50/1.50 A	0 … 100	1	●		OT, UV, OV, OC, OCD	VQFN-48
TLE7183QU	5.50 … 28.00	1.50/1.50 A	0 … 100	1	●		OT, UV, OV, OC, SCD	TQFP-48 EP
TLE7184F TLE7184F-3V[2]	7.00 … 32.00	12.50/9.00 Ω 12.50 Ω	0 … 95	1	●		UV, OV, OC, SCD, OT, VDD supervision	VQFN-48
TLE7185E	5.50 … 32.00	12.50/9.00 Ω	0 … 95	0	●		UV, OV, SCD, OT	DSO-36 EP
TLE7189F	5.50 … 28.00	1.50/1.50 A	0 … 100	3		●	UV, OV, SCD, OT, VDD supervision	VQFN-48
TLE7189QK	5.50 … 28.00	1.50/1.50 A	0 … 100	3		●	UV, OV, SCD, OT, VDD supervision	LQFP-64
AUIRS20302	8.00 … 17.00 Output offset 200 V	0.20/0.35 A	0 … 95	1 (SC protection)			One error flag for OTW, UV, SC	DSO-28 (28 lead SOIC)

1) See packages on page 134 to 136
2) System IC for fans and pumps with integrated LDO and PWM interface

LO = Lockout
OL = Open-Load
OV = Overvoltage
OC = Overcurrent

UV = Undervoltage
OT = Overtemperature
SCD = Short-Circuit Detection

Downloaded from Arrow.com.

Gate drivers for automotive high-voltage applications (hybrid and electric vehicles)

Isolated gate driver ICs

The Infineon EiceDRIVER™ family includes single and dual channel automotive IGBT driver IC's providing galvanic isolation and bidirectional signal transmission. The products are ideal for main inverter systems in automotive applications where efficiency, space savings and monitoring functions are priorities.

Key features

- On-chip galvanic isolation
- Advanced safety functions
- Standard SPI interface
- Gate signal shaping
- Overcurrent monitoring
- 8-bit ADC with programmable offset and gain
- AEC-Q100 qualified

Applications

- (H)EV main inverter
- AC-DC charger
- DC-DC converter

Functional block diagram for 1EDI2002AS

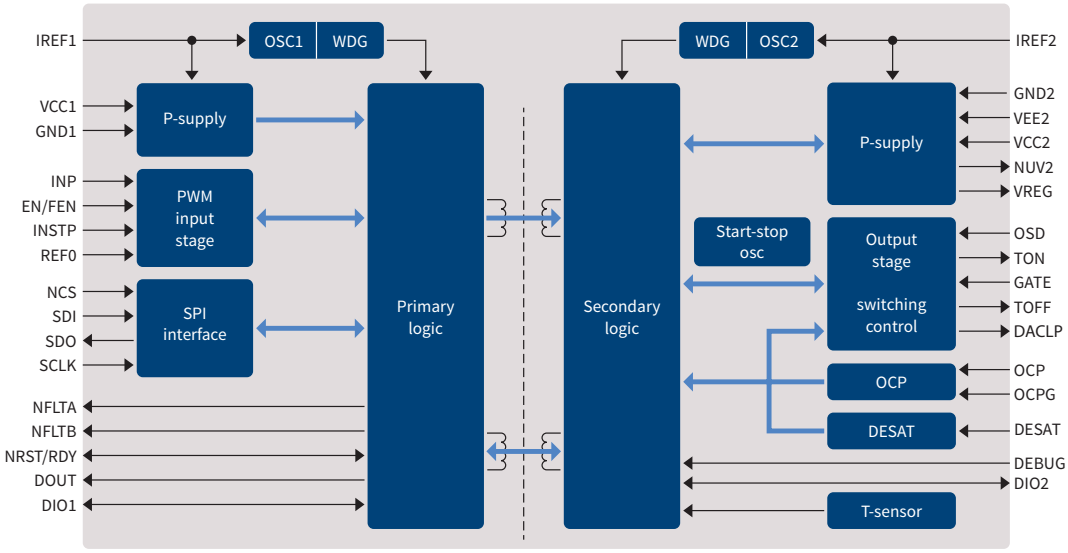

Product name	Voltage class [V]	Source current [A]	Sink current [A]	Channels	Topology	Package[1)]
1ED020I12FA2	1200	2	2	1	Single	DSO-20
1ED020I12FTA	1200	2	2	1	Single	DSO-20
2ED020I12FA	1200	2	2	2	Half-bridge	DSO-36
1EDI2001AS	1200	1	1	1	Single	DSO-36
1EDI2002AS	1200	1	1	1	Single	DSO-36
1EDI2004AS[2)]	1200	1	1	1	Single	DSO-36
1EDI2010AS	1200	1	1	1	Single	DSO-36
1EDI2015AS	1200	1	1	1	Single	DSO-36
1EBN1001AE	40	15	15	1	Buffer	DSO-14 EP
AUIR08152S	40	10	10	1	Buffer	SO-8 (DSO-8)

1) See packages on page 134 to 136
2) Coming soon in Q4/2017

www.infineon.com/driver-ic

Downloaded from Arrow.com.

Gate drivers for automotive high-voltage applications (hybrid and electric vehicles)

General purpose gate driver ICs (HVIC)

Our comprehensive portfolio of automotive-qualified gate driver ICs helps simplify design, and optimize performance in all FETs and IGBTs driving stages.

Key features

- Off-set voltage 600 V
- Multiple driving topologies
- Short propagation delay
- High tolerance to negative Vs spikes
- AEC-Q100 qualified

Applications

- AC-DC charger
- DC-DC converter
- HVAC compressor
- HV fans and pumps
- PTC heater

Functional block diagram for AUIRS2191S

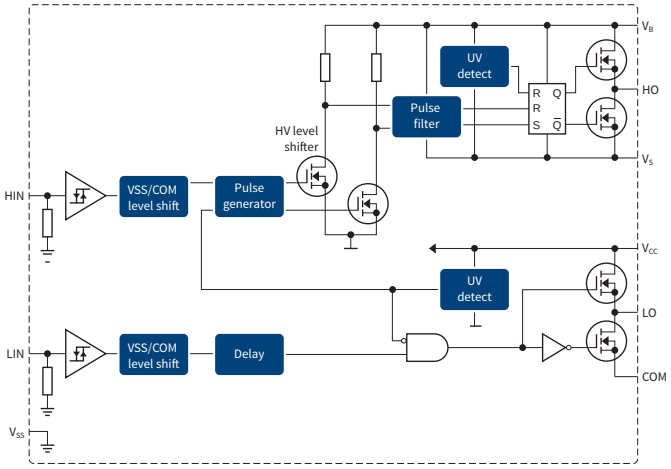

Application schematic for AUIRS1170S

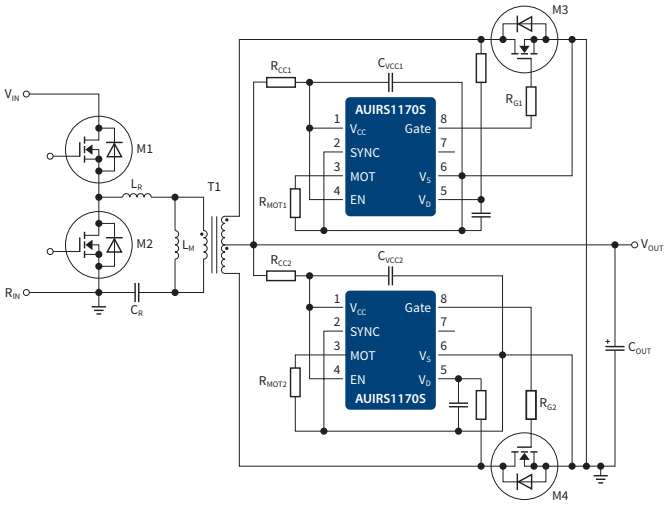

Product name	Voltage class [V]	Source current [A]	Sink current [A]	Channels	Topology	Package[1]
AUIRS1170S	200	3.00	6.00	1	Synchronous rectification IC	SO-8 (DSO-8)
AUIRS2117S	600	0.29	0.60	1	Single high-side driver	SO-8 (DSO-8)
AUIRS2118S	600	0.29	0.60	1	Single high-side driver	SO-8 (DSO-8)
AUIRS2123S	600	0.50	0.50	1	Single high-side driver	SO-8 (DSO-8)
AUIRS2124S	600	0.50	0.50	1	Single high-side driver	SO-8 (DSO-8)
AUIRS2127S	600	0.29	0.60	1	Single high-side driver	SO-8 (DSO-8)
AUIRS21271S	600	0.29	0.60	1	Single high-side driver	SO-8 (DSO-8)
AUIRS2113S	600	2.50	2.50	2	Half-bridge	SO-16 WB (16 lead SOIC)
AUIRS2181S	600	1.90	2.30	2	Half-bridge	SO-8 (DSO-8)
AUIRS21811S	600	1.90	2.30	2	Half-bridge	SO-8 (DSO-8)
AUIRS21814S	600	1.90	2.30	2	Half-bridge	SO-14 NB (14 lead SOIC)
AUIRS2191S	600	3.50	3.50	2	Half-bridge	SO-16 NB (16 lead SOIC)
AUIRS2301S	600	0.20	0.35	2	Half-bridge	SO-8 (DSO-8)
AUIRS2336S	600	0.20	0.35	6	Half-bridge	DSO-28 (28 lead SOIC)
AUIR2114SS[2]	700	2	3	2	Half-bridge	SSOP-24
AUIR2214SS[3]	1200	2	3	2	Half-bridge	SSOP-24

1) See packages on page 134 to 136
2) Coming in Q1/2018
3) Coming in Q2/2018

Downloaded from Arrow.com.

Gate drivers for power distribution

The Infineon AUIR32xx family offers the capability of addressing high-current applications where a power switch of less than 1 mΩ is required. The AUIR3200S is a general purpose driver for use in various applications where a high-current (< 10 A) protected switch is required. The AUIR3240S and AUIR3241S can be used in any application to achieve a low quiescent current when on, such as the battery switch in a stop-and-start system.

AUIR3200S: MOSFET gate driver with protection and diagnostic features

Applications

- Battery switch
- Relay replacement
- Motor control

Key features

- Operating range: 6 to 36 V
- Programmable overcurrent protection
- Programmable overtemperature shutdown
- Latched protection
- Diagnostics
- Reverse battery protection (turn on the MOSFET)
- Smart undervoltage protection
- Loss of ground protection
- PWM capability
- Very low stand-by current

AUIR3240S/AUIR3241S: MOSFET gate drivers with very low current consumption

Applications

- Power switch for Stop and Start board net stabilizer
- Battery switch (AUIR3241)
- Q-diode switch (AUIR3240)
- Temperature monitoring with NTC interface (AUIR3240)
- Boost converter with integrated diode
- Standard level gate voltage
- Input active high

Key features

- Very low quiescent current on and off state
- Back to back configuration (AUIR3241)
- Undervoltage lockout with diagnostic
- Wide operating voltage 3–36 V
- Ground loss protection

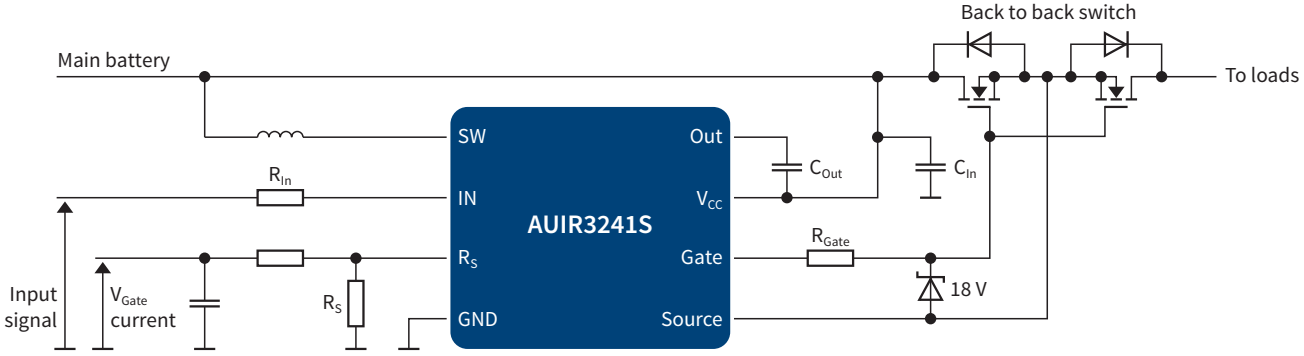

www.infineon.com/driver-ic

Downloaded from Arrow.com.

Gate drivers for power distribution

AUIRS2012: High- and low-side MOSFET driver with 200 V V_S capability

Applications

- Mid- to low-voltage DC-DC converter for micro and mild hybrid vehicles
- Multiphase buck boost converters
- Brushless motor drive

Key features

- High- and low-side gate driver
- Fully operational up to 200 V
- Floating channel designed for bootstrap operation
- 2 A source and sink currents
- Extended supply voltage range: 10 to 20 V
- CMOS Schmitt-triggered inputs
- Undervoltage lockout function
- Matched propagation delay times

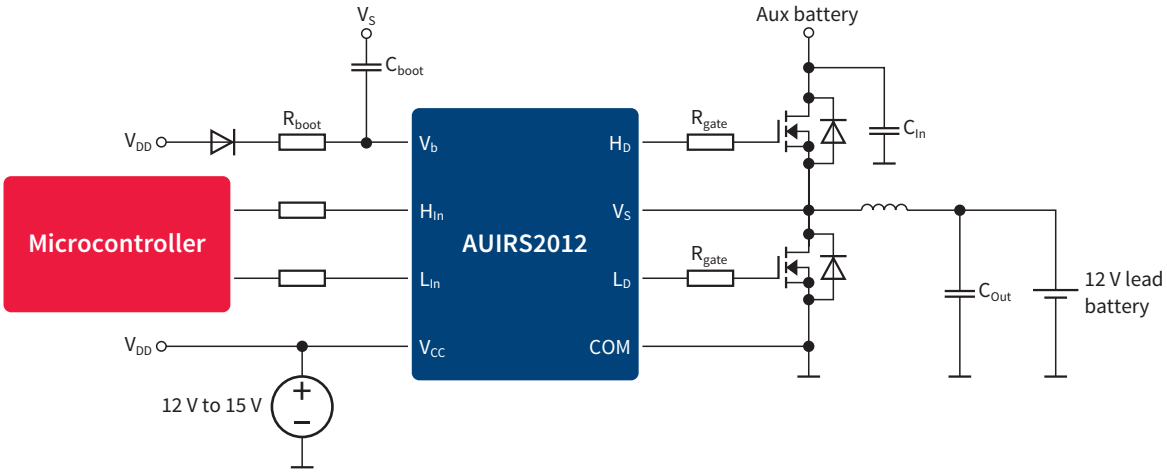

	Product name	Topology	Min supply voltage [V]	Max supply voltage [V]	Output gate voltage [V]	Special features	Package[1)]
	AUIR3200S	Single high-side driver	6	36	6	Overcurrent and overtemperature protection, diagnostics	SO-8 (DSO-8)
	AUIR3240S	Single high-side driver	4	36	13	Very low operating current	SO-8 (DSO-8)
NEW	AUIR3241S	Single high-side back-to-back driver	3	36	13	Very low operating current	SO-8 (DSO-8)
	AUIRS2012	High- and low-side gate driver	10	20	–	Fully operational up to 200 V battery voltage	SO-8 (DSO-8)

1) See packages on page 134 to 136

Downloaded from Arrow.com.



Infineon® Embedded Power ICs

System-on-Chip motor control

Infineon® Embedded Power ICs are specifically designed to enable mechatronic motor control solutions for a range of motor control applications, where a small package form factor and a minimum number of external components are essential. Such applications include window lift, sunroof, wiper, fuel pump, HVAC fans, engine cooling fan and water pumps, to name but a few.

Produced on Infineon's first-in-industry automotive-qualified Smart Power technologies, the Infineon Embedded Power System-on-Chip (SoC) solutions offer an unmatched level of integration of all functions required to sense, control and actuate a motor.

The Infineon® Embedded Power ICs integrate on single die the microcontroller, the non-volatile flash memory, the analog and mixed signal peripherals, the communication interfaces along with the driving stages needed for either relay, half-bridge or full-bridge DC and BLDC motor applications.

All Infineon Embedded Power ICs are offered in a space saving VQFN-48 package.

The new Infineon® Embedded Power IC is supported by a complete development tool chain provided by Infineon and third party vendors. The tool chain includes compiler, debugger, evaluation board, LIN low level driver and configuration tool as well as various software code examples.

Selection tree – Infineon Embedded Power IC motor control

Infineon® Embedded Power IC

Relay motor control	PN half-bridge motor control	H-bridge motor control	3-phase bridge motor control
TLE9842QX	TLE9845QX	TLE9861QXA20	TLE9871QXA20
TLE9842-2QX		TLE9867QXA20	TLE9877QXA20
TLE9843QX		TLE9867QXA40	TLE9877QXA40
TLE9843-2QX		TLE9869QXA20	TLE9879QXA20
TLE9844QX		TLE9867QXW40	TLE9879QXA40
TLE9844-2QX			TLE9873QXW40
			TLE9877QXW40
			TLE9879QXW40

www.infineon.com/embeddedpower

Downloaded from Arrow.com.

Infineon® Embedded Power ICs

TLE984x – LIN based relay driver ICs with integrated microcontroller

The TLE984x product family brings together the ARM® Cortex®-M0 core and the market proven peripherals of its predecessor TLE983x (XC800 based relay driver). It integrates on a single die all the necessary functions to sense, control and actuate a motor via a relay or via a PN MOSFET half-bridge.

The TLE984x family concept offers scalability in terms of flash memory sizes ranging from 36 kB to 64 kB with pin-compatible devices. It is specifically designed to fit to a wide range of LIN-slave motor control application such as window lifts, wipers, sun roofs, fans and blowers to name a few.

Target applications

- Window lift
- Sunroof
- Wiper
- Switch panel interface
- Electrical pump
- Electrical fan

TLE984x family offers

- Two protected low-side switches (min. 270 mA)
- Up to two protected high-side switches (min. 150 mA)
- Up to five high-voltage inputs with wake-up functionality
- Integrated LIN transceiver compatible with LIN 2.2 and SAEJ2602
- Two full duplex serial interface (UART) with LIN support
- Two Synchronous Serial Channel (SSC), compatible with SPI
- On-chip oscillator and PLL for clock generation
- Measurement unit:
  - 8-bit ADC module with 7 multiplexed inputs for system supervision
  - 10-bit ADC module with 13 multiplexed inputs
  - On chip temperature and battery voltage measurement
- Independent programmable window watchdog
- 5 V/1.5 V internal supplies
- External supply (V_{DDEXT}): 5 V ±2 percent at 20 mA
- Power saving modes
  - MCU slow-down mode
  - Sleep mode
  - Stop mode
  - Cyclic wake-up from sleep mode or stop mode

System Benefits

- System-on-chip solution with integrated ARM® Cortex® for DC motor control
- Platform solution for a size and weight optimized relay based motor control
- Integrated voltage regulator, LIN transceiver, switch inputs and relay driver
- Cyclic sense and cyclic wake-up capability saves average current consumption
- Minimum number of external components reduce BOM cost
- VQFN package with 7 x 7 mm footprint enables PCB space saving
- Single chip solution improves module reliability

Features of the microcontroller and its peripherals

- 32-bit ARM® Cortex®-M0 core, up to 25/40 MHz clock frequency
- 36 KB to 64 KB flash memory for code and data
- Boot ROM for startup firmware and flash routines
- Up to 4 kByte RAM memory
- Thumb® + Thumb-2® Instruction Set
- Nine 16-bit timers
- Capture/compare unit for PWM signal generation (CCU6) with 2 x 16-bit timers

General characteristics

- Operating supply voltage V_S = 5.5 to 28 V, maximum rating 40 V
- Extended operating range V_S = 3.0 to 28 V, MCU/flash fully functional
- Wide operating temperature range: T_j: -40°C up to 150°C

Downloaded from Arrow.com.

TLE984x product overview

Product name	Core	Flash [kB]	RAM [kB]	EEPROM in flash included [kB]	Freq [MHz]	High-side switch	High-voltage monitor input	GPIO	Analog inputs	PN MOS driver	Interface	Package[1)]
Relay driver IC with integrated microcontroller												
TLE9842QX	Cortex®-M0	36	2	4	25	1	4	10	6	No	PWM + LIN	VQFN-48
TLE9842-2QX	Cortex®-M0	40	2	4	40	2	5	10	6	No	PWM + LIN	VQFN-48
TLE9843QX	Cortex®-M0	48	4	4	25	1	4	10	6	No	PWM + LIN	VQFN-48
TLE9843-2QX	Cortex®-M0	52	4	4	40	2	5	10	6	No	PWM + LIN	VQFN-48
TLE9844QX	Cortex®-M0	64	4	4	25	1	4	10	6	No	PWM + LIN	VQFN-48
TLE9844-2QX	Cortex®-M0	64	4	4	40	2	5	10	6	No	PWM + LIN	VQFN-48
Half-bridge driver IC with integrated microcontroller												
TLE9845QX	Cortex®-M0	48	4	4	40	2	5	10	6	Yes	PWM + LIN	VQFN-48

1) See packages on page 134 to 136

Embedded Power ICs TLE984xQX: smart window lift application diagram

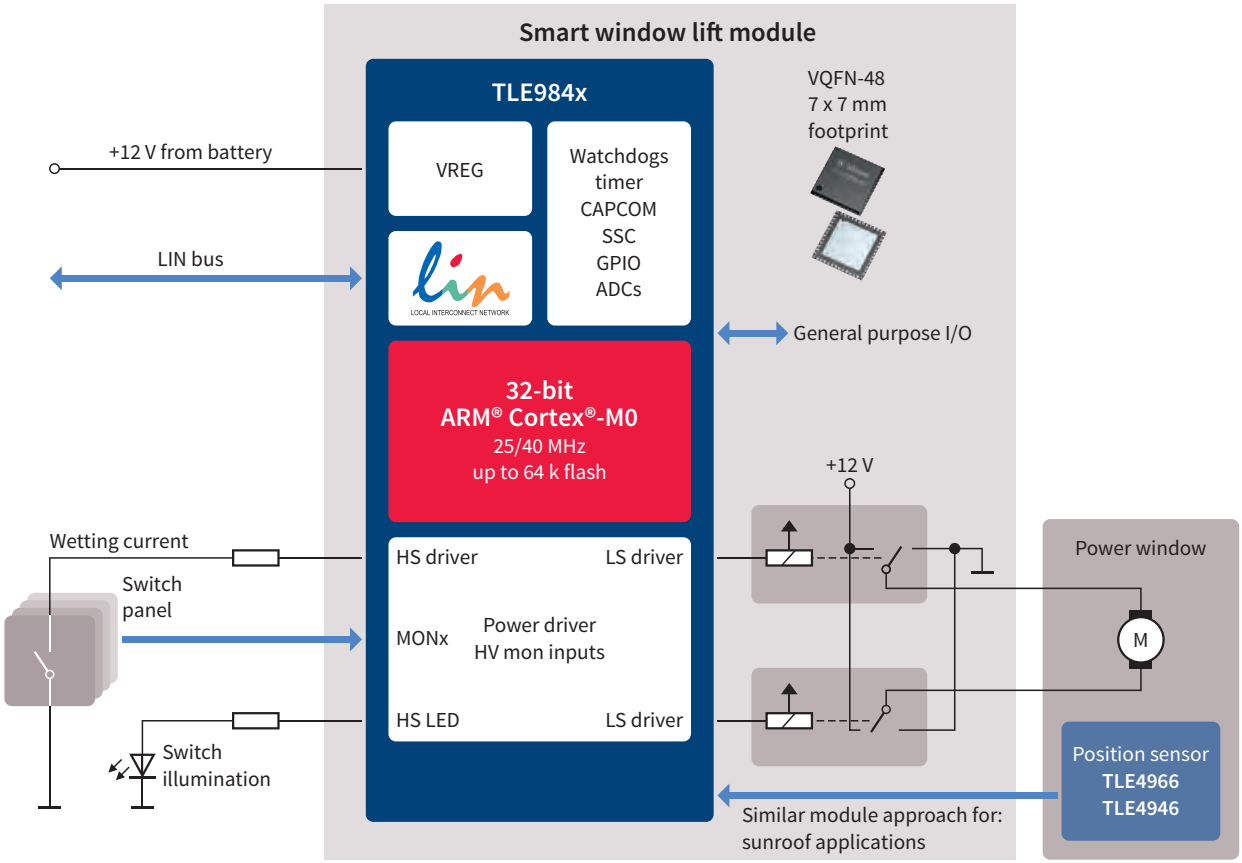

www.infineon.com/embeddedpower

Downloaded from Arrow.com.

Infineon® Embedded Power ICs

TLE986x – 2-phase bridge driver IC with integrated ARM® Cortex®-M3 core

Infineon has combined its wealth of experience in motor control drivers for automotive applications with an industry-standard core. The unique result, our 3rd generation Embedded Power IC based on ARM® Cortex®-M3 core, addresses a wide range of smart 2-phase DC motor control application like sunroof, power window lift, electrical pumps, electrical fans.

The TLE986x family offers scalability in terms of flash memory sizes and MCU system clock frequency supporting a wide range of motor control algorithms. It uses the same MCU and peripherals as the TLE987x family, 3-phase driver, enabling design synergies between DC and BLDC motor control application.

Target applications

- Sunroof
- Window lift
- Electrical pump
- Electrical fan

TLE986x family offers

- Four current programmable drivers with charge pump for N-Channel MOSFET
- Integrated LIN transceiver compatible with LIN 2.2 and SAE J2602
- Two full duplex serial interface (UART) with LIN support
- Two Synchronous Serial Channel (SSC)
- On-chip OSC and PLL for clock generation
- One high-voltage monitoring input with wake-up functionality
- High-speed operational amplifier for motor current sensing via shunt
- Measurement unit
  - 8-bit ADC module with 10 multiplexed inputs
  - 10-bit ADC module with 8 multiplexed inputs, 5 external analog inputs
  - On chip temperature and battery voltage measurement unit
- Independent programmable window watchdog
- 5 V/1.5 V internal supplies
- External supply (V_{DDEXT}): 5 V ±2 percent at 20 mA
- Power saving modes
  - MCU slow-down mode
  - Sleep mode
  - Stop mode
  - Cyclic wake-up sleep mode

Benefits

- Complete system-on-chip for DC motor control
- Minimum number of external components reduce BOM cost
- Platform solution for a wide range of motor control algorithms
- Simplifies EMC design based on slope programmable MOSFET driver
- Intelligent power saving modes including stop and sleep mode, supports energy management (on demand)
- VQFN package with 7 x 7 mm footprint enable PCB space saving
- Reduce the motor size and weight
- Single die solution improves module reliability

Features of the microcontroller

- 32-bit ARM® Cortex®-M3 core, up to 40 MHz clock frequency
- 36 KB to 128 KB flash memory
- Up to 6 KB RAM memory
- Harvard architecture
- Thumb®-2 Instruction Set and hardware divide and multiplication unit
- Four 16-bit timers
- Capture/compare unit for PWM signal generation (CCU6) with 2x 16-bits timers

General characteristics

- Operating supply voltage V_S = 5.5 to 28 V, maximum rating 40 V
- Extended operating range V_S = 3.0 to 28 V, MCU/flash fully functional
- ESD performance
  - up to 2 kV / handling on all pins
  - 4 kV at HV inputs
  - 6 kV at LIN pin
- Overvoltage device clamp (load dump ruggedness) up to 40 V
- Wide operating temperature range: T_j: -40°C up to 150°C/175°C

www.infineon.com/embeddedpower

Downloaded from Arrow.com.

Block diagram

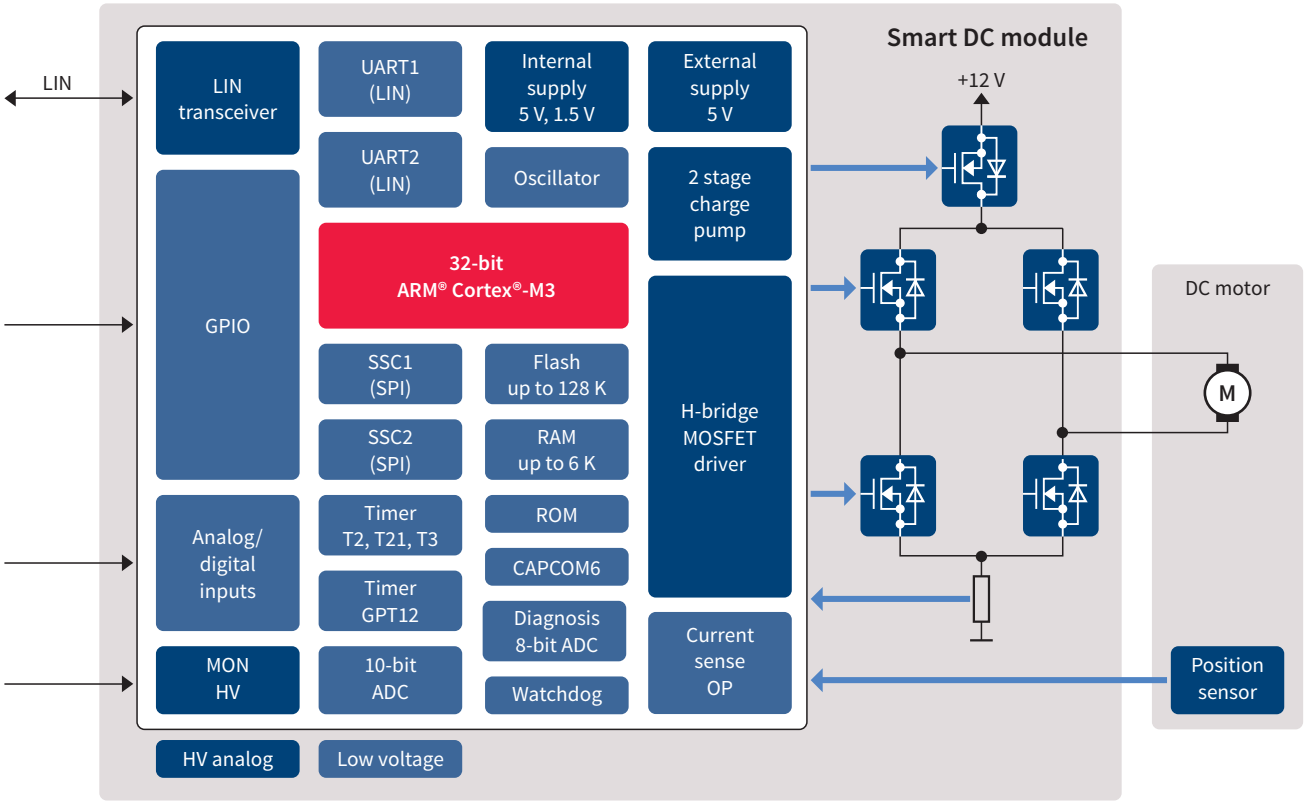

TLE986x 32-bit µC with 2-phase NFET Gate Driver for DC motors (grade-1, T_j = 150°C)

Product name	Frequency [MHz]	Interface	RAM [KB]	Flash [KB]	EEPROM emulation [KB]	OP-AMP	Low-side MOSFET drivers	High-side MOSFET drivers	Package[1]
TLE9861QXA20	24	PWM	3	36	4	y	2	2	VQFN-48
TLE9867QXA20	24	PWM + LIN	6	64	4	y	2	2	VQFN-48
TLE9867QXA40	40	PWM + LIN	6	64	4	y	2	2	VQFN-48
TLE9869QXA20	24	PWM + LIN	6	128	4	y	2	2	VQFN-48

TLE986x 32-bit µC with 2-phase NFET Gate Driver for DC motors (grade-0, T_j = 175°C)

Product name	Frequency [MHz]	Interface	RAM [KB]	Flash [KB]	EEPROM emulation [KB]	OP-AMP	Low-side MOSFET drivers	High-side MOSFET drivers	Package[1]
TLE9867QXW20	24	PWM + LIN	6	64	4	y	2	2	VQFN-48

1) See packages on page 134 to 136

Downloaded from Arrow.com.

Infineon® Embedded Power ICs

TLE987x – 3-phase bridge driver IC with integrated ARM® Cortex®-M3 core

Infineon has combined its wealth of experience in motor control drivers for automotive applications with all the benefits of an industry-standard core. The unique result, our 3rd generation Embedded Power IC based on ARM® Cortex®-M3 core, addresses a wide range of smart 3-phase brushless DC motor control application like, fuel pumps, HVAC fans, engine cooling fans, electrical water pumps.

The TLE987x family offers scalability in terms of flash memory sizes and MCU system clock frequency supporting a wide range of motor control algorithms, either sensor-based or sensor-less. It uses the same MCU and peripherals as the TLE986x family, 2-phase driver, enabling design synergies between DC and BLDC motor control applications.

Target applications

- Wiper
- Electrical pump
- Electrical fan
- Sensor-less and sensor-based BLDC motor applications controlled by the Local Interconnect Network (LIN) or PWM

TLE987x family offers

- Six current programmable drivers with charge pump for N-Channel MOSFET
- Integrated LIN transceiver compatible with LIN 2.2 and SAE J2602
- Two full duplex serial interface (UART) with LIN support
- Two Synchronous Serial Channel (SSC)
- On-chip OSC and PLL for clock generation
- One high-voltage monitoring input with wake-up functionality
- High-speed operational amplifier for motor current sensing via shunt
- Measurement unit
  - 8-bit ADC module with 10 multiplexed inputs
  - 10-bit ADC module with 8 multiplexed inputs, 5 external analog inputs
  - On chip temperature and battery voltage measurement unit
- Independent programmable window watchdog
- 5 V/1.5 V internal supplies
- External supply (V_{DDEXT}): 5 V ±2 percent at 20 mA
- Power saving modes
  - MCU slow-down mode
  - Sleep mode
  - Stop mode
  - Cyclic wake-up sleep mode

Benefits

- Complete system-on-chip for BLDC motor control
- Minimum number of external components reduce BOM cost
- Platform solution for a wide range of motor control algorithms
- Supports sensor-less field-oriented control motor control algorithm
- Simplifies EMC design based on slope programmable MOSFET driver
- Intelligent power saving modes including stop and sleep mode, supports energy management (on demand)
- VQFN package with 7 x 7 mm footprint enable PCB space saving
- Reduce the motor size and weight
- Single die solution improves module reliability

Features of the microcontroller

- 32-bit ARM® Cortex®-M3 core, up to 40 MHz clock frequency
- 36 KB to 128 KB flash memory
- Up to 6 KB RAM memory
- Harvard architecture
- Thumb®-2 Instruction Set and hardware divide and multiplication unit
- Four 16-bit timers
- Capture/compare unit for PWM signal generation (CCU6) with 2x 16-bits timers

General characteristics

- Operating supply voltage V_S = 5.5 to 28 V, maximum rating 40 V
- Extended operating range V_S = 3.0 to 28 V, MCU/flash fully functional
- ESD performance
  - up to 2 kV / handling on all pins
  - 4 kV at HV inputs
  - 6 kV at LIN pin
- Overvoltage device clamp (load dump ruggedness) up to 40 V
- Wide operating temperature range: T_j: -40°C up to 150°C/175°C

www.infineon.com/embeddedpower

Downloaded from Arrow.com.

Block diagram

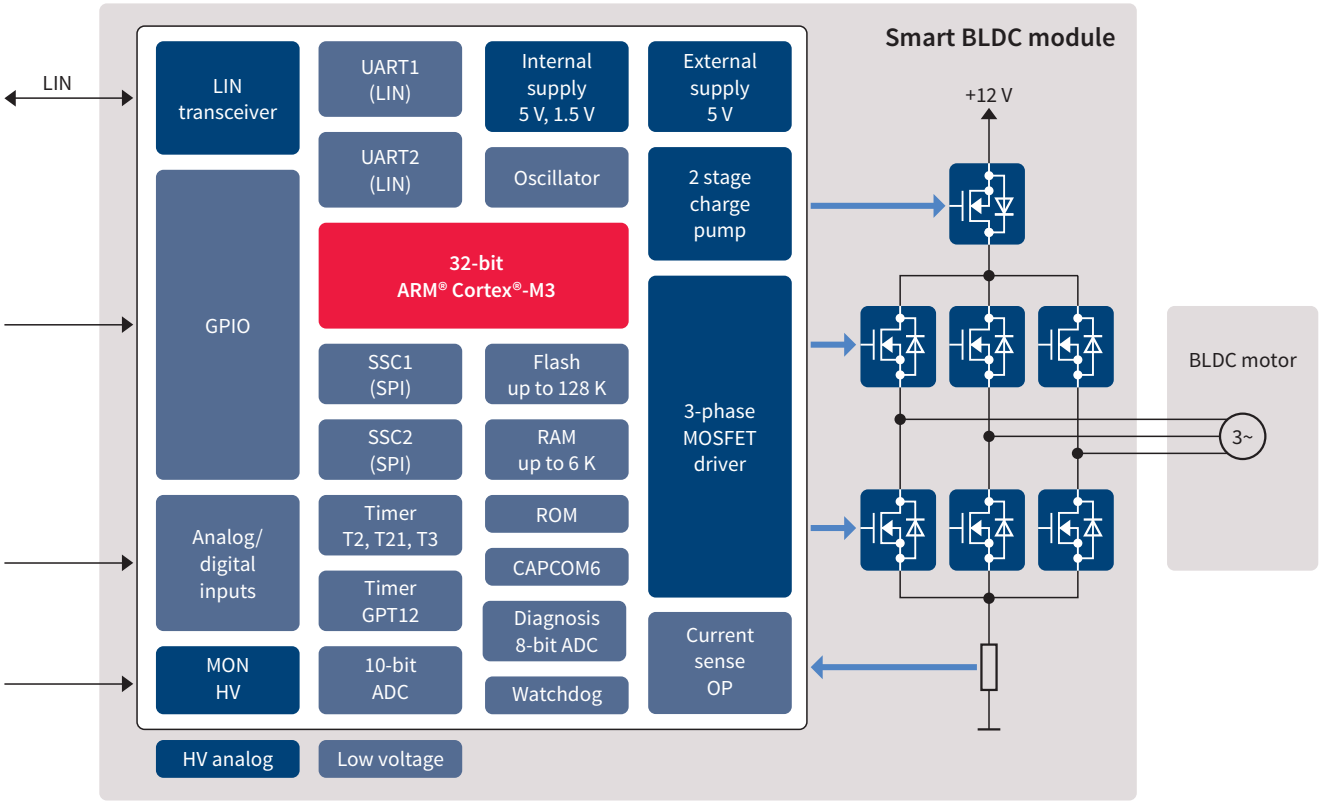

TLE987x 32-bit µC with 3-phase NFET Gate Driver for DC motors (grade-1, T_j = 150°C)

Product name	Frequency [MHz]	Interface	RAM [KB]	Flash [KB]	EEPROM emulation [KB]	OP-AMP	Low-side MOSFET drivers	High-side MOSFET drivers	Package[1]
TLE9871QXA20	24	PWM	3	36	4	y	3	3	VQFN-48
TLE9877QXA20	24	PWM + LIN	6	64	4	y	3	3	VQFN-48
TLE9877QXA40	40	PWM + LIN	6	64	4	y	3	3	VQFN-48
TLE9879QXA20	24	PWM + LIN	6	128	4	y	3	3	VQFN-48
TLE9879QXA40	40	PWM + LIN	6	128	4	y	3	3	VQFN-48
TLE9879-2QXA40[2]	40	PWM + LIN	6	128	4	y	3	3	VQFN-48

TLE987X 32-bit µC with 3-Phase NFET Gate Driver for DC Motors, (grade-0, T_j = 175°C)

Product name	Frequency [MHz]	Interface	RAM [KB]	Flash [KB]	EEPROM emulation [KB]	OP-AMP	Low-side MOSFET drivers	High-side MOSFET drivers	Package[1]
TLE9873QXW40	40	PWM + LIN	3	48	4	y	3	3	VQFN-48
TLE9877QXW40	40	PWM + LIN	6	64	4	y	3	3	VQFN-48
TLE9879QXW40	40	PWM + LIN	6	128	4	y	3	3	VQFN-48

1) See packages on page 134 to 136
2) Product will be released in Q1 CY2018 and has two 14-bit Sigma-Delta ADCs integrated who build a Sensor interface for an external AMR/ GMR sensor.

www.infineon.com/embeddedpower

Downloaded from Arrow.com.



Power supply ICs

Linear voltage regulators and DC-DC converters

In automotive ECUs, microcontrollers and other electronic system components have to be supplied by a stable and reliable voltage that is lower than the battery voltage (e.g. 3.3 V or 5 V) and works over the entire temperature range (from -40°C to 150°C).

Depending on the application – i.e. the output current and the requested system efficiency – linear voltage regulators or DC-DC converters are ideal for use in the automotive world.

Power Supply ICs

Linear regulators

- Cost optimized for current < 500 mA
- Lower design outlay
- Less noise, less filtering
- Large portfolio
- Small packages, e.g. newly released TSON-10 leadless package with automated optical inspection

DC-DC converters

- Higher power density
- Better system efficiency
- Cost optimized for current > 500 mA

AEC Qualified

RoHS

www.infineon.com/dcdc-converter
www.infineon.com/voltage-regulators

Downloaded from Arrow.com.

Linear voltage regulators

Linear voltage regulator families



Standard solution of linear voltage regulators, suitable for almost all automotive applications due to a wide range portfolio



Best-in-class linear voltage regulators in relation to energy savings and stop-and-start systems (e.g. for cold cranking conditions)



Supply ICs for sensor applications: robust and accurate voltage distribution



Linear voltage regulators not directly connected to the battery line (e.g. used after a DC-DC converter)



Linear voltage regulators for application-specific solutions (e.g. active antenna)



Linear voltage regulators for 24 V battery applications

Main features



Enable function for main output. Low current consumption in stand-by.



Power-on reset sensing output voltage



Standard and window watchdog



Early warning comparator for sensing input undervoltage



“Power Good” indicates the undervoltage and/or overvoltage error condition at the output

www.infineon.com/voltage-regulators

Downloaded from Arrow.com.

Linear voltage regulators

General Purpose

Selection table for 12 V battery applications

Output current	15 mA	30 mA	100 mA	150 mA	180/200 mA	300 mA ultra low power	400/450 mA	> 500 mA
No feature	TLE4285 (5 V)	TLE4294 (5 V)	TLE42644 (5 V) TLE42344 (5 V)			TLE7274-2 (5 V)	TLE42744 (5 V, 3.3 V)	TLE4284 (adj., 1.5 V, 1.8 V, 2.6 V, 3.3 V, 5 V)
EN		TLE4296-2 (5 V, 3.3 V)	TLS710B TLE42364 TLE42664 (5 V)	TLS715B (5 V)		TLE7276-2 (5 V)	TLE42764 (adj., 5 V)	
RES	TLE4286 (5 V)	TLE4295 (5 V, 3.3 V)	TLF4949 (5 V)	TLE42694 (5 V)		TLE7270-2 (5 V)	TLE42754 (5 V, 3.3 V) TLE4675 (5 V)	
EN, RES				TLE42994E (5 V, 3.3 V)	TLE4699 (5 V)	TLE7272-2 (5 V)		
RES, WD					TLE4678(-2) (5 V)			
EN, RES, WD					TLE4263-2 (5 V) TLE7278-2 (5 V) TLE7273-2 (window WD) (2.6 V, 3.3 V, 5 V)		TLE4291 (5 V)	

Selection table for 24 V battery applications

Output current	70 mA	400/450 mA	> 500 mA
EN	TLT807B0 (adj.)		
EN, RES		TLE4267-2 (5 V)	
EN, RES, WD			TLE4271-2 (5 V)

Key features

- Standard features
  - Wide operation range up to 45 V
  - Low dropout voltage
  - Wide temperature range: -40°C up to +150°C
- Standard protection
  - Short-circuit protection
  - Reverse polarity protection as option
  - Overload protection
  - Overtemperature protection

Key benefits

- Broad portfolio: devices available for all types of applications
- Best-in-class quality
- Full 150°C automotive qualification
- Long-term availability

www.infineon.com/voltage-regulators

Downloaded from Arrow.com.

Selection table for 12 V battery applications

Product name	I_Q [mA]	I_q [µA]	V_S range [V]	V_Q [V]	Drop voltage [V]	Accuracy [%]	Outpu capacitance (min) [µF]	Reset	Adjustable reset threshold	Enable	Watchdog	Early warning	Package[1]
TLE4285	15	100	6.00–45.00	5.00	0.80	4	1.00	●[2) 3)]					SCT595-5
TLE4286	15	60	6.00–45.00	5.00	0.80	4	1.00			●			SCT595-5
TLE4294	30	120	5.50–45.00	5.00	0.25	4	2.20						SCT595-5
TLE4295	30	120	3.50–45.00	3.30; 5.00	0.25	4	2.20	●[2) 3)]					SCT595-5
TLE4296-2	30	130	4.00–45.00	3.30; 5.00	0.25	4	3.30			●			SCT595-5
TLS710	100	36	4.00–45.00	5.00	0.20	2	1.00			●			DSO-8 EP
TLF4949	100	180	3.50–45.00	5.00	0.30	2	4.70	●[3)]				●	DSO-8, DSO-8 EP
TLE42344	120	300	5.50–45.00	5.00	0.25	2	10.00						SOT223
TLE42364	120	300	5.50–45.00	5.00	0.25	2	10.00			●			SOT223
TLS715	150	36	4.00–45.00	5.00	0.20	2	1.00			●			DSO-8 EP
TLE42644	150	40	5.50–45.00	5.00	0.22	2	10.00						SOT223
TLE42664	150	40	5.50–45.00	5.00	0.25	2	10.00			●			SOT223
TLE42694	150	210	5.50–45.00	5.00	0.25	2	10.00	●	●			●	DSO-8, DSO-14, SSOP-14 EP
TLE42694-2	150	210	5.50–45.00	5.00	0.25	2	4.70	●	●				SSOP-14 EP
TLE42794	150	150	5.50–45.00	5.00	0.25	2	10.00	●	●			●	DSO-8, DSO-14, SSOP-14 EP
TLE42994	150	65	4.40–45.00	3.30; 5.00	0.25	2	22.00	●	●	●		●	DSO-8, DSO-14, SSOP-14 EP
TLE4268	180	300	5.50–45.00	5.00	0.25	2	22.00	●	●		●		DSO-8, DSO-20
TLE7273-2	180	28	4.20–45.00	2.60; 3.30; 5.00	0.25	2	0.50	●		●	●[4)]		DSO-14, SSOP-14 EP
TLE7278-2	180	28	4.20–45.00	5.00	0.25	2	0.50	●		●	●		DSO-14, SSOP-14 EP
TLE7279-2	180	28	4.20–45.00	2.60; 3.30; 5.00	0.25	2	0.50	●		●		●	DSO-14, SSOP-14 EP
TLE4263/-2	200	900	5.50–45.00	5.00	0.35	2	22.00	●	●	●	●		DSO-8 EP, DSO-20
TLE4278	200	180	5.50–45.00	5.00	0.25	2	10.00	●	●		●		DSO-14
TLE4678/-2	200	60	3.30–45.00	5.00	0.25	2	10.00	●	●		●		DSO-14, SSOP-14
TLE4699	200	70	3.30–45.00	5.00	0.16	2	10.00	●	●	●		●	DSO-14, SSOP-14
TLE7270-2	300	20	5.50–45.00	5.00	0.20	2	0.50	●					SSOP-14 EP, TO252-5 (DPAK 5-leg), TO263-5 (D²PAK 5-leg)
TLE7272-2	300	20	5.50–45.00	5.00	0.25	2	0.50	●		●			SSOP-14 EP, TO252-5 (DPAK 5-leg)
TLE7274-2	300	20	5.50–45.00	5.00	0.25	2	0.50						SSOP-14 EP, TO252-3 (DPAK), TO263-3 (D²PAK)
TLE7276-2	300	20	5.50–45.00	5.00	0.25	2	0.50			●			SSOP-14 EP, TO252-5 (DPAK 5-leg)
TLE4267-2	400	1300	5.50–40.00 (60.00)	5.00	0.30	2	22.00	●		●			TO263-7 (D²PAK 7-leg)
TLE42744	400	100	3.30–45.00	3.30; 5.00	0.25	2	22.00						SOT223, SSOP-14 EP, TO252-3 (DPAK), TO263-3 (D²PAK)
TLE42754	400	150	5.50–45.00	3.30; 5.00	0.25	2	22.00	●					SSOP-14 EP, TO252-5 (DPAK 5-leg), TO263-5 (D²PAK 5-leg)
TLE42764	400	100	4.50–45.00	Adj.; 5.00	0.25	2	22.00			●			SSOP-14 EP, TO252-5 (DPAK 5-leg), TO263-5 (D²PAK 5-leg)
TLE4675	400	65	3.30–45.00	5.00	0.25	2	22.00	●					TO252-5 (DPAK 5-leg), TO263-5 (D²PAK 5-leg)
TLE4291	450	220	3.30–45.00	5.00	0.25	2	22.00	●	●	●	●		SSOP-14 EP
TLE4284	1000	1000	2.90–40.00	Adj.; 1.50; 1.80; 2.60; 3.30; 5.00	1.00	3	10.00						TO252-3 (DPAK)

1) See packages on page 134 to 136
2) Power good
3) Power fail
4) Window watchdog

www.infineon.com/voltage-regulators

Downloaded from Arrow.com.

Linear voltage regulators

General Purpose

Selection table for 24 V battery applications

Product name	I_Q 1 [mA]	I_Q 2/3 [mA]	I_q [µA]	V_S range [V]	V_Q [V]	Drop voltage [V]	Accuracy [%]	Output capacitance (min) [µF]	Overvoltage protection	Reset	Adjustable reset threshold	Enable	Watchdog	Early warning	Package[1]
TLT807B0	70		36	4.70–42.00 (58.00)	Adj.	0.25	2	1	●			●			TSDSO-14 EP
TLE4267-2	400		1300	5.50–40.00 (60.00)	5.00	0.30	2	22	●	●		●			TO263-7 (D^2PAK 7-leg)
TLE4476	430	350	300 mA	5.70–42.00 (60.00)	5.00 & 3.30	0.30	4	10/10	●						TO252-5 (DPAK 5-leg)
TLE4471	450	50 100	1100 mA	5.50–40.00 (60.00)	3x 5.00	0.25	2	22/10/10	●	●	●		●		DSO-20 (Power-SO)
TLE4271-2	550		800	6.00–42.00 (60.00)	5.00	0.35	2	22	●	●		●	●		TO263-7 (D^2PAK 7-leg) TO220-7
TLE4470	350	180	180	5.60–45.00 (60.00)	5.00 & Adj.	0.30	2	6/10	●	●	●			●	DSO-20 (Power-SO)

Power supply multiple output regulators

Product name	I_Q 1 [mA]	I_Q 2/3 [mA]	I_q [mA]	V_S range [V]	V_Q 1 [V]	V_Q 2/3 [V]	Drop voltage [V]	Accuracy [%]	Output capacitance (min) [µF]	Overvoltage protection	Reset	Adjustable reset threshold	Watchdog	Early warning	Package[1]
TLE7469G	215	200	55	4.20–45.00	5.00	2.60 or 3.30	0.30	3	1/1	●	●		●	●	DSO-12
TLE4473/-2	300	180	200	5.60–45.00	5.00	3.30 or 5.00	0.30	2	10/22		●		●		DSO-12
TLE4470	350	180	180	5.60–45.00 (60.00)	5.00	Adj.	0.30	2	6/10		●	●		●	DSO-14, DSO-20
TLE4476	350	430	300	5.70–42.00 (60.00)	5.00	3.30	0.30	4	10/10	●					TO252-5 (DPAK 5-leg)
TLE4471	450	50 100	1100	5.50–40.00 (60.00)	5.00	2x 5.00	0.25	2	22/10/10	●	●		●		DSO-20 (Power-SO)

1) See packages on page 134 to 136

Downloaded from Arrow.com.

High-performance linear voltage regulators

Selection table

Output current	50 mA	100 mA	200 mA	350 mA	400 mA	500 mA
No feature		**TLS810A1** (5 V, 3.3 V)			**TLF80511** (5 V, 3.3 V)	
EN	**TLS805B1** (5 V, 3.3 V, adj.)	**TLS810B1** (5 V, 3.3 V)	**TLS820B2** (5 V, 3.3 V)	**TLS835B2** (5 V, 3.3 V, adj.)		**TLS850B0** (5 V, 3.3 V)
RES		**TLS810C1** (3.3 V)				
EN, RES	**TLS805D1** (5 V)	**TLS810D1** (5 V, 3.3 V)	**TLS820D0** (5 V, 3.3 V)	**TLS835D2** (5 V, 3.3 V)		**TLS850D0** (5 V, 3.3 V)
EN, RES, WD			**TLS820F0** (5 V, 3.3 V) **TLS820F1** (5 V)			**TLS850F0** (5 V, 3.3 V) **TLD850F1** (5 V)

Energy efficient | Robust

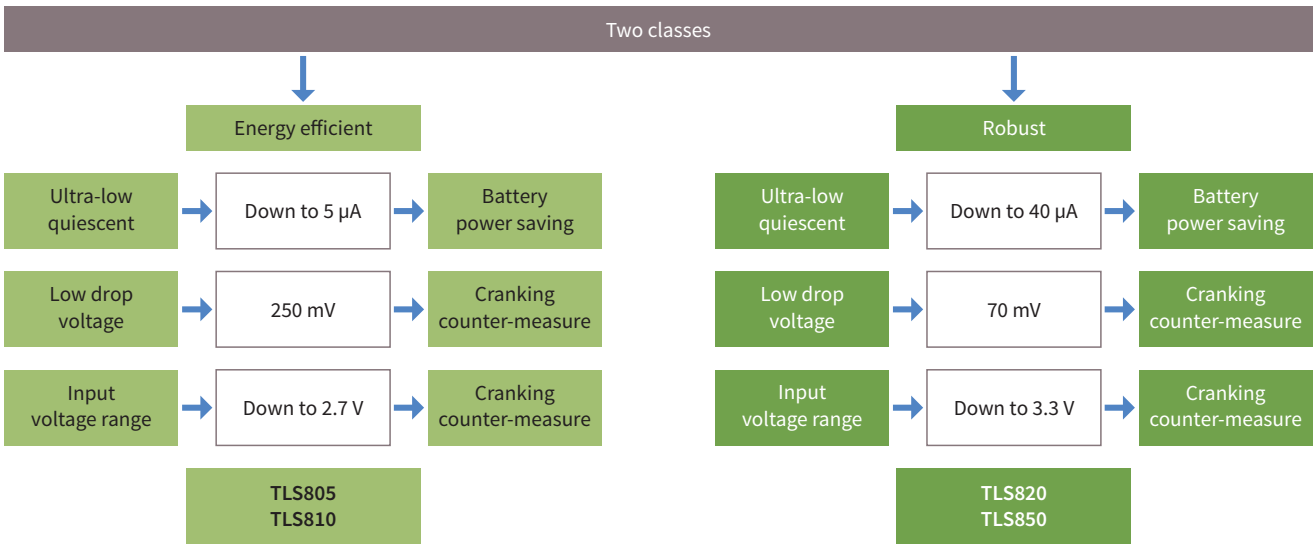

www.infineon.com/voltage-regulators

Downloaded from Arrow.com.

High-performance linear voltage regulators

Key features and benefits

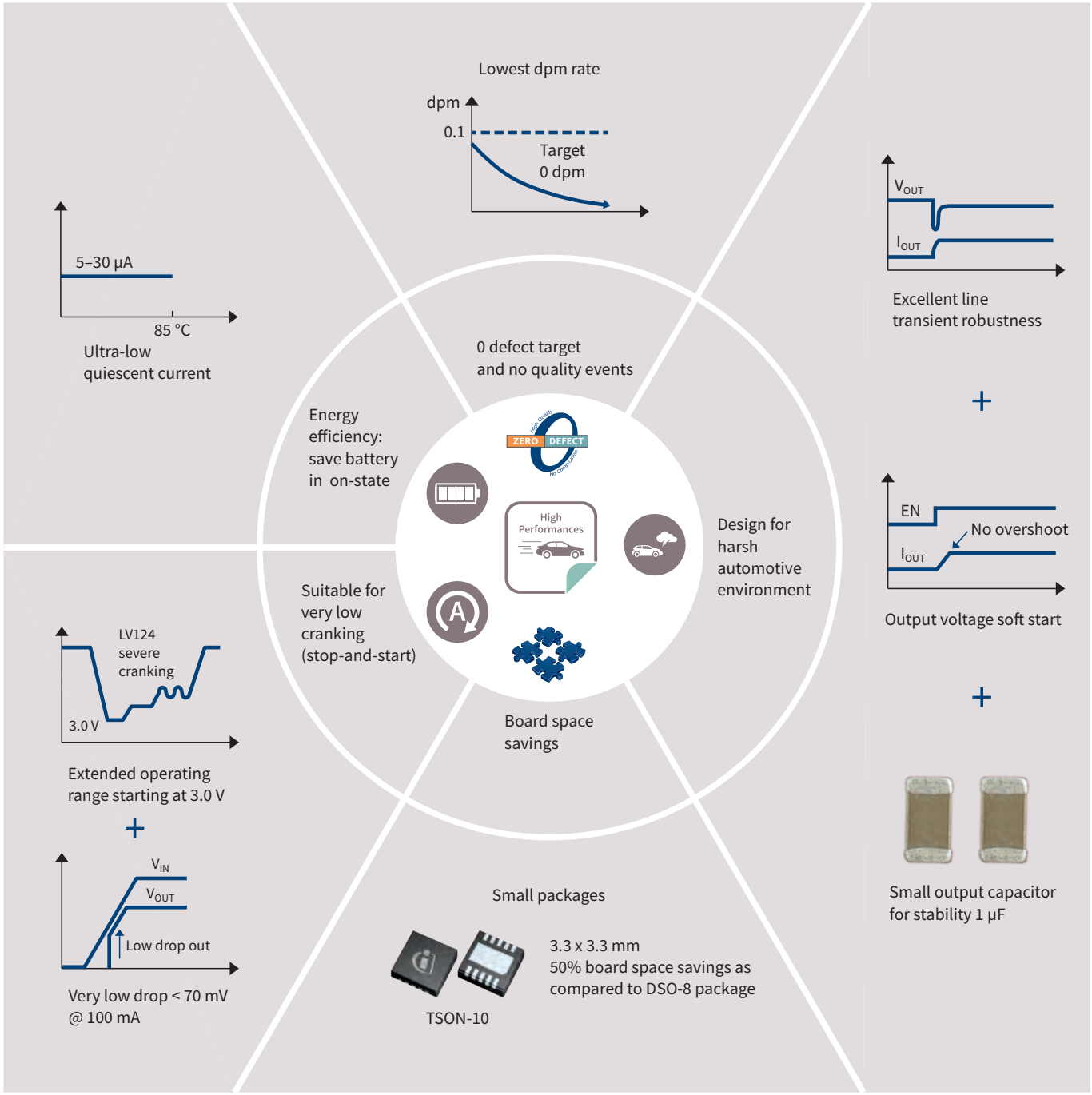

Downloaded from Arrow.com.

Applications

Energy efficient family

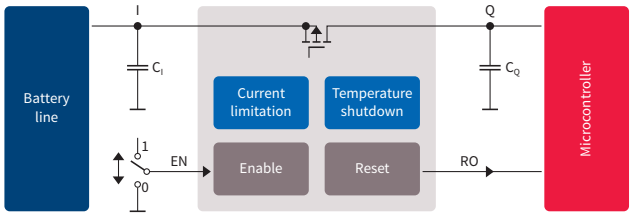

Applications

- Application with direct battery connection
  - RKE, immobilizer, gateway
  - Infotainment, alarm, dashboard
- General automotive ECUs

Robust family

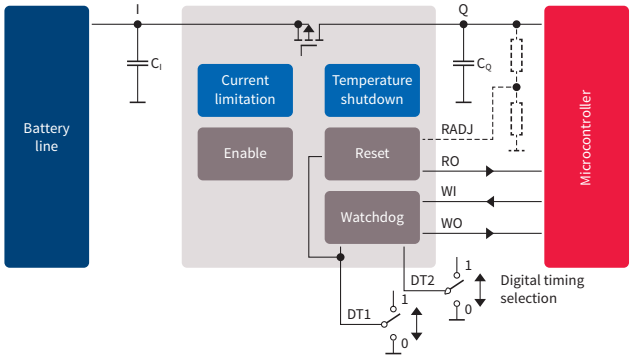

Applications

- BCM, RKE, trunk, dashboard, HVAC
- Brake, EPS, TPMS, BMS
- Transmission
- General automotive ECUs

High-performance voltage regulators by output current

Product name	I_Q [mA]	I_q [µA]	V_S range [V]	V_Q [V]	Drop voltage [mV]	Accuracy [%]	C_Q [µF]	Reset	Enable (= Inhibit)	Watchdog	Package[1]
TLS805B1	50	5.00	2.75–42.00	Adj., 3.3, 5.0	100	2.00	1		●		TSON-10 DSO-8
TLS805D1	50	9.50	2.75–42.00	5.0	100	2.00	1	●	●		TSON-10
TLS810A1	100	5.00	2.75–42.00	3.3, 5.0	250	2.00	1				TSON-10
TLS810B1	100	5.50	2.75–42.00	3.3, 5.0	250	2.00	1		●		TSON-10 DSO-8 EP
TLS810C1	100	9.00	2.75–42.00	3.3	250	2.00	1	●			DSO-8 EP
TLS810D1	100	9.50	2.75–42.00	3.3, 5.0	250	2.00	1	●	●		TSON-10 DSO-8 EP
TLS820D0	200	40.00	3.00–40.00	3.3, 5.0	70	2.00	1	●	●		SSOP-14
TLS820F0	200	40.00	3.00–40.00	3.3, 5.0	70	2.00	1	●	●	●	SSOP-14
TLS820F1	200	40.00	3.00–40.00	5.0	70	2.00	1	●	●	●	SSOP-14
TLS820B2[2]	200	17.00	3.00–40.00	3.3, 5.0	100	2.00	1		●		SSOP-14
TLS835B2[2]	350	17.00	3.00–40.00	Adj., 3.3, 5.0	120	2.00	1		●		SSOP-14
TLS835D2[2]	350	20.00	3.00–40.00	3.3, 5.0	120	2.00	1	●	●		SSOP-14
TLS730[3]	400	5.50	2.50–40.00	Adj.	200	2.00	1		●		TSDSO-14
TLF80511	400	38.00	3.30–40.00	3.3, 5.0	100	2.00	1				DSO-8 EP TO263-3 (D^2PAK)
TLS850B0	500	23.00	3.00–40.00	3.3, 5.0	100	2.00	1		●		TO263-5 (D^2PAK 5-leg) TO252-5 (DPAK 5-leg)
TLS850D0[3]	500	40.00	3.00–40.00	3.3, 5.0	70	2.00	1	●	●		TO263-7 (D^2PAK 7-leg) TO252-5 (DPAK 5-leg)
TLS850F0	500	40.00	3.00–40.00	3.3, 5.0	70	2.00	1	●	●	●	TO263-7 (D^2PAK 7-leg)
TLS850F1	500	40.00	3.00–40.00	5.0	70	2.00	1	●	●	●	TO263-7-1 (D^2PAK 7-leg)

1) See packages on page 134 to 136
2) Coming Q1/2018
3) Coming Q4/2017

www.infineon.com/voltage-regulators

Downloaded from Arrow.com.

Voltage trackers

Voltage trackers are specially designed to supply off-board sensors. They provide harsh environment protection for the ECU and the sensor incorporating overvoltage, overtemperature, reverse polarity and reverse current protection. Aditional output voltage monitoring diagnostic has been implemented in selected devices.

Application block diagram examples

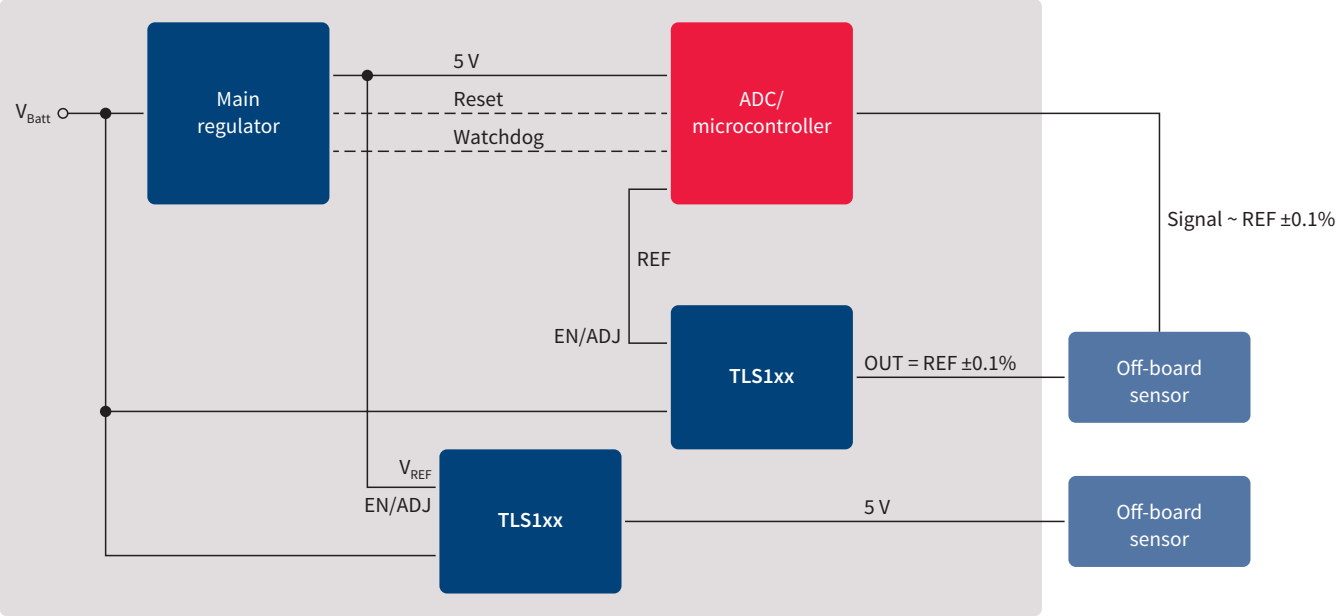

System benefits using voltage tracker ICs

- Reliable protection for ECU/sensor
  - Cable short to GND and BAT protected
  - Accurate current limitation
  - Battery reverse polarity
- High tracking accuracy
- Ease of use
- High flexibility/scalability

Key features

- V_{IN}: -16–45 V at 50 mA max current
- Adjustable output voltage down to 2 V
- High tracking accuracy 0.1 percent
- Small ceramic output capacitor (≥ 1 µF)
- Reverse voltage and overcurrent protection
- Soft start
- Temp. range: -40°C ≤ T_J ≤ 150°C

Key benefits

- Improves system robustness
  - Various protection means
  - Overvoltage/undervoltage monitor
- Reduced system cost
  - Low implementation effort
  - Supports low cost external components

www.infineon.com/voltage-regulators

Downloaded from Arrow.com.

Voltage trackers by output current

	Product name	I_Q [mA]	Adjust voltage (min) [V]	Accuracy [%]	Independent EN pin	Power good	Package[1]
NEW	TLS102B0	20	2.0	±0.1			SCT595-5
NEW	TLS105B0	50	2.0	±0.1			SCT595-5
	TLE4250-2	50	2.5	±0.5			SCT595-5
	TLE4254	70	2.0	±0.1		●	DSO-8 DSO-8-EP
	TLS115B0	150	2.0	±0.1	●		DSO-8 EP TSON-10
	TLS115D0	150	2.0	±0.1	●	●	DSO-8 EP TSON-10
	TLE4252	250	1.5	±0.2	●		TO252
	TLE4253	250	2.0	±0.2			DSO-8 DSO-8-EP
	TLE4251	400	2.5	±0.2	●		TO252-5 (DPAK 5-leg) TO263-5 (D^2PAK 5-leg)

1) See packages on page 134 to 136

Linear post regulators



Selection table

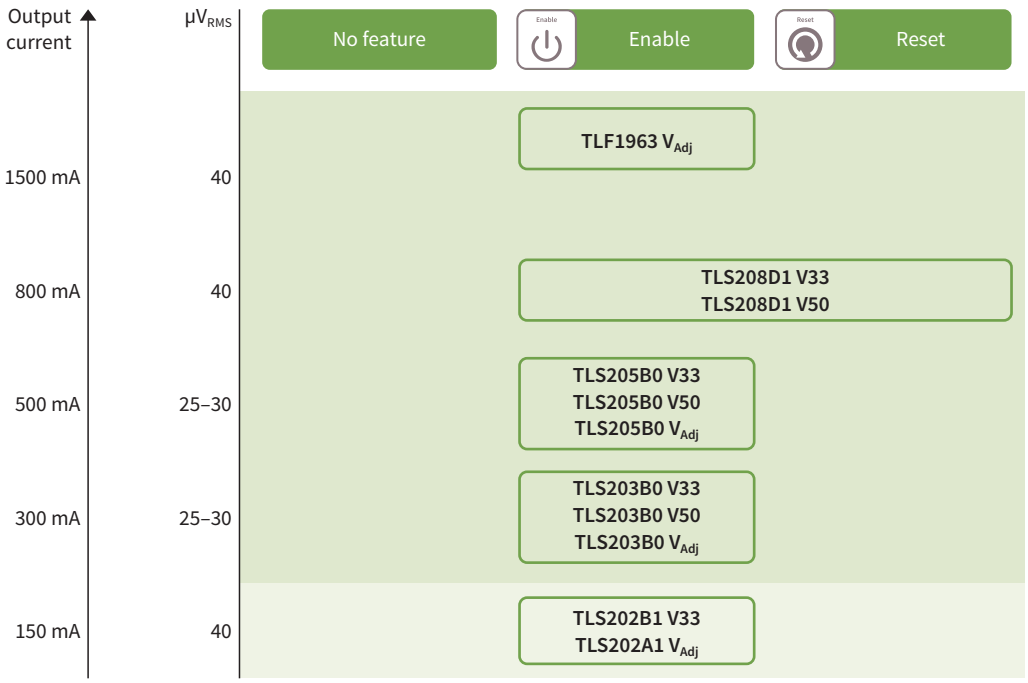

www.infineon.com/voltage-regulators

Downloaded from Arrow.com.

Linear post regulators

Applications

- ADAS: radars and cameras
- ADAS: MMIC (low noise)
- Infotainment, displays, cluster
- CPU supplies (FPGA, DSP), memory
- Post regulation after DCDC converter
- EMS

Linear solution

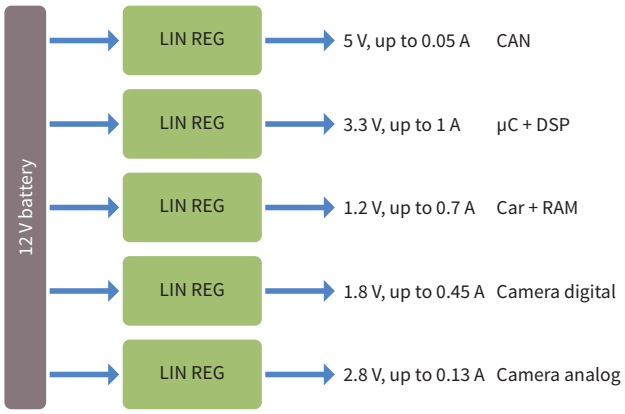

Low system efficiency
High power losses

Post regulation DC-DC and linear

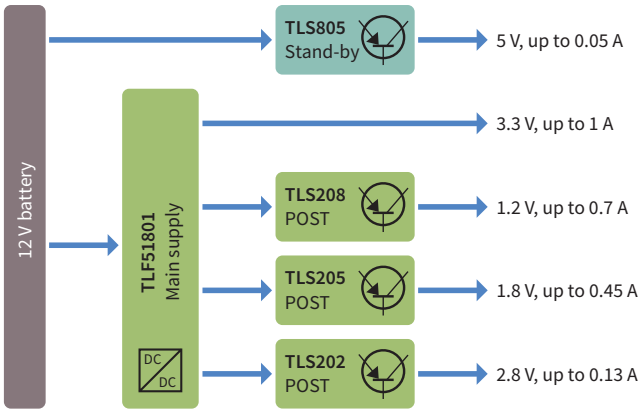

High efficiency-cost ratio

Maximum efficiency and optimal flexibility

System benefits	TLF51801 controller	Linear post regulator
› Higher efficiency › Higher flexibility › Lower system cost › Higher reliability	› Adjustable voltage › Max current up to 10 A › Current limitation › Advanced feature set	› Higher V_{in} range than CMOS (V_{in} = 20 V max) › Adjustable voltage › Max current up to 1.5 A › Low noise
	Automotive-qualified T_j up to 150°C	

Linear post regulators by output current

	Product name	I_Q [mA]	I_q [µA]	V_S range [V]	V_Q [V]	Drop voltage [V]	Accuracy [%]	Output capacitance (min) [µF]	Reset	Adjustable reset threshold	Enable	Package[1]
NEW	TLS202B1	150	50	2.70–20.00	3.3, 5.0	0.50	3	1.00			●	SCT595-5
	TLS202A1	150	50	2.70–20.00	Adj.	0.50	3	1.00				SCT595-5
	TLS203B0	300	30	2.30–20.00	Adj., 3.3, 5.0	0.30	3	3.30			●	DSO-8 EP, TSON-10
	TLS205B0	500	30	2.30–20.00	Adj. 3.3, 5.0	0.30	3	3.30			●	DSO-8 EP, TSON-10
	TLS208D1	800	90	–	Adj., 3.3	–	2	–	●	●		DSO-8 EP, TSON-10
	TLF1963	1500	1100	2.50–20.00	Adj.	0.34	3	10.00			●	TO263-5 (D²PAK 5-leg) TO252-5 (DPAK 5-leg)

1) See packages on page 134 to 136

Downloaded from Arrow.com.

Application specific

TLF4277

Key applications
- Active antennas
- Battery charger
- Microphones

Key features
- Current monitor functionality
- Adjustable current limitation
- Adjustable output voltage
- Short-circuit detection to GND and battery voltage level
- SSOP-14 EP package
- TSON-10 package, leadless and capable of automatic optical inspection
- Overtemperature detection/protection

Key benefits
- Diagnosis of antenna system status (linear current detection)
- Flexible protection of sensitive components
- Easy adjustment to the application requirements
- Fast identification of short-circuit failures
- Enhances thermal characteristics

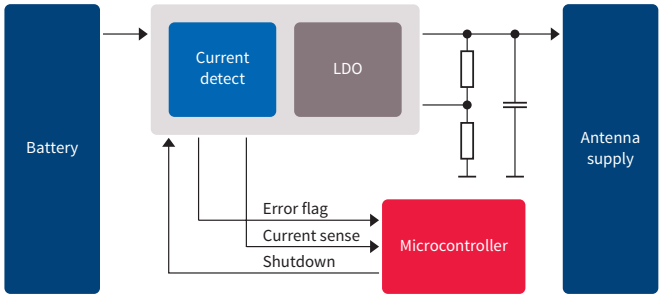

Current sense performance

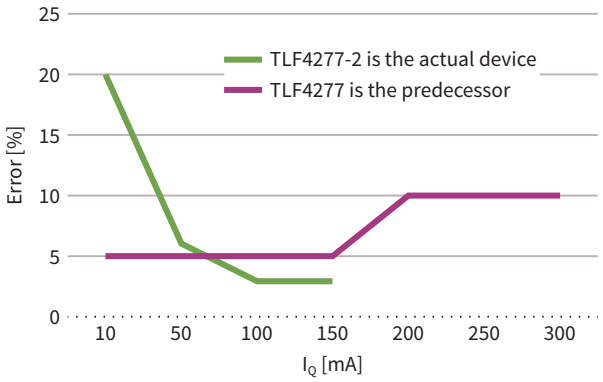

Active antenna family

Product name	I_Q [mA]	I_q [µA]	V_S range [V]	V_Q [V]	Drop voltage [V]	Accuracy [%]	Output capacitance (min) [µF]	Enable	Package[1]
TLF4277[2]	200	140	5.00–45.00	Adj.	0.25	2	10	●	SSOP-14 EP
TLF4277-2[2]	300	150	5.00–45.00	Adj.	0.20	2	1	●	SSOP-14 EP TSON-10

1) See packages on page 134 to 136
2) LDO with current monitor and status output

www.infineon.com/voltage-regulators

Downloaded from Arrow.com.

DC-DC converters

Infineon Technologies offers several switching converters serving applications with extended requirements like supply for 32-bit µC and airbag applications.

In our portfolio you can find step-up (boost) and step-down (buck) DC-DC converters as well as DC-DC converters cascaded internally with linear regulators and trackers.

- Step-up and step-down converters
- High-efficiency regulators
- Wide supply voltage operation range
- Very low current consumption operation
- Suitable for standard 12 V/24 V PowerNets
- Disable function for main output
- Output undervoltage reset with delay
- Short-circuit protection
- Overtemperature protection
- Wide ambient operation range: -40°C up to 150°C

Single-rail DC-DC converters

Product name	$V_{S(OP)}$ [V]	V_Q [V]	Accuracy 1 [%]	I_Q [mA]	I_q [mA]	f_{sw} [kHz]	PFM operation	Reset	Watchdog	Enable/disable possibility	Early warning	Package[1]
Buck												
TLE6365	8.00 ... 40.00	5.00	2	400	1.500	100		●				DSO-8
TLE6389-2GV	5.00 ... 60.00	Adj.	3	2300	0.120	250 ... 530	●	●		●	●	DSO-14
TLE6389-2GV50	5.00 ... 60.00	5.00	3	2300	0.120	250 ... 530	●	●		●	●	DSO-14
TLE6389-3GV50	5.00 ... 60.00	5.00	3	2300	0.120	250 ... 530	●	●[2]		●	●	DSO-14
TLE8366	4.75 ... 45.00	Adj., 3.30, 5.00	2(4)	1800	7.000	200 ... 530				●		DSO-8 EP
TLS4120D0[3]	3.70 … 40.00	Adj., 3.30, 5.00	2	2000	0.025	380 ... 2800	●	●		●		TSDSO-14 EP
TLF50281	4.75 ... 45.00	5.00	2	500	0.045	800 ... 2200	●	●	STD	●		SSOP-14 EP
TLF50251	4.75 ... 45.00	5.00	2	500	0.045	800 ... 2200	●	●		●		SSOP-14 EP
TLF50241	4.75 ... 45.00	5.00	2	500	0.045	800 ... 2200	●	●				SSOP-14 EP
TLF50211	4.75 ... 45.00	5.00	2	500	0.045	800 ... 2200	●			●		SSOP-14 EP
TLF50201	4.75 ... 45.00	5.00	2	500	0.045	800 ... 2200	●					SSOP-14 EP
TLF51801	4.75 ... 45.00	1.20–D_{max}*V_S	2	Adj. max 10,000	< 2.000 µA	100 ... 700				●		SSOP-14 EP
Boost												
TLE8386[4]	4.75 ... 45.00	Adj. (max 9-times of V_S)	4	dep.on V_Q	7000	100 ... 500				●		SSOP-14 EP
TLE8386-2[5]	4.75 ... 45.00	Adj. (max 9-times of V_S)	4	dep.on V_Q	7000	100 ... 500				●		SSOP-14 EP

1) See packages on page 134 to 136
2) Different voltage reset hysteresis
3) Coming Q3/2018
4) HS-sense-booster (preferably as current source)
5) LS-sense-booster

Downloaded from Arrow.com.

Featured product: TLF51801 synchronouse 10 A flexible pre-regulator

Key features

› Driving FETs for loads up to 10 A
› Adjustable switching frequency can be synchronized to an external clock
› Very low shut-down current
› Internal soft-start
› Protection functions
› SSOP-14 EP small thermally enhanced package

Application diagram

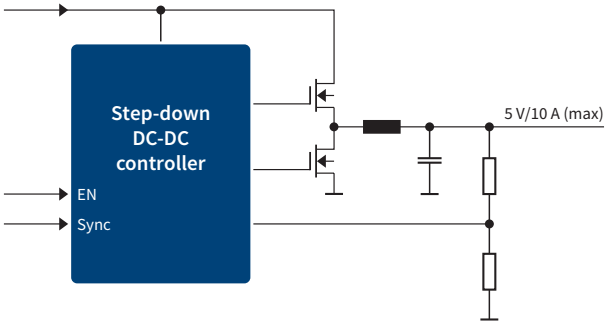

Key benefits

› Flexibility in current limitation to reduce external components
› Integrated soft-start limits the current peak as well as voltage overshoot at startup

Key applications

› ADAS, camera, radar ECU's
› Wireless charger, USB Supply for mobile phone charger
› Telematic and eCall applications

Featured product family: TLF502x1 low quiescent current DC-DC

Key features

› High input voltage range up to 45 V
› Output: 500 mA/5 V (±2 percent)
› Low quiescent current < 45 µA
› High operating frequency: up to 2.2 MHz
› Synch-in and adjust. switching frequency
› Integrated compensation and soft-start
› Family approach with dedicated feature set
  – Enable: ultra-low shutdown current
  – Reset with adjust. RES-thresholds
  – Watchdog with adjust. timing
› SSOP-14 EP (thermally enhanced)

Application diagram

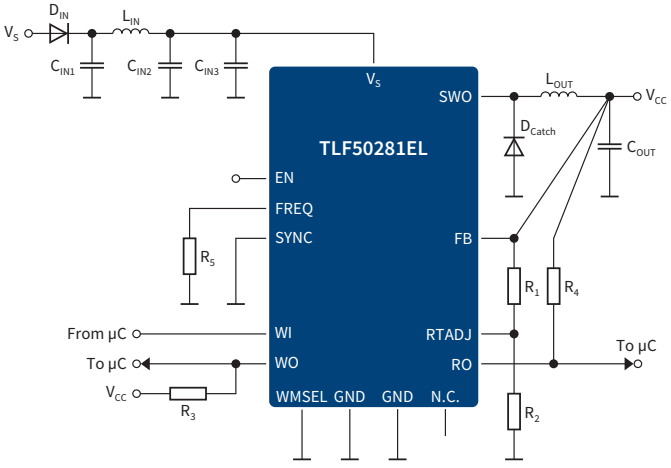

L_{IN}, C_{IN1} and C_{IN3} recommended for suppression of EME
D_{IN} depending on application

Key benefits

› Suitable for permanently V_{Batt}-connected ECUs
› Optimized costs and board space
  – Smaller coils and caps
  – No external components needed for compensation and soft-start
› Flexibility
  – Reset management
  – µC-supervision
› Ultra-low shutdown current
› Reduced design outlay

Key applications

› General use DC-DC with low quiescent current
› Body ECUs , decentralized lighting modules
› Sensor cluster, telematics, infotainment, camera

www.infineon.com/dcdc-converter

Downloaded from Arrow.com.

System supply

TLF35584 – system supply for safety-relevant applications

Functional block diagram

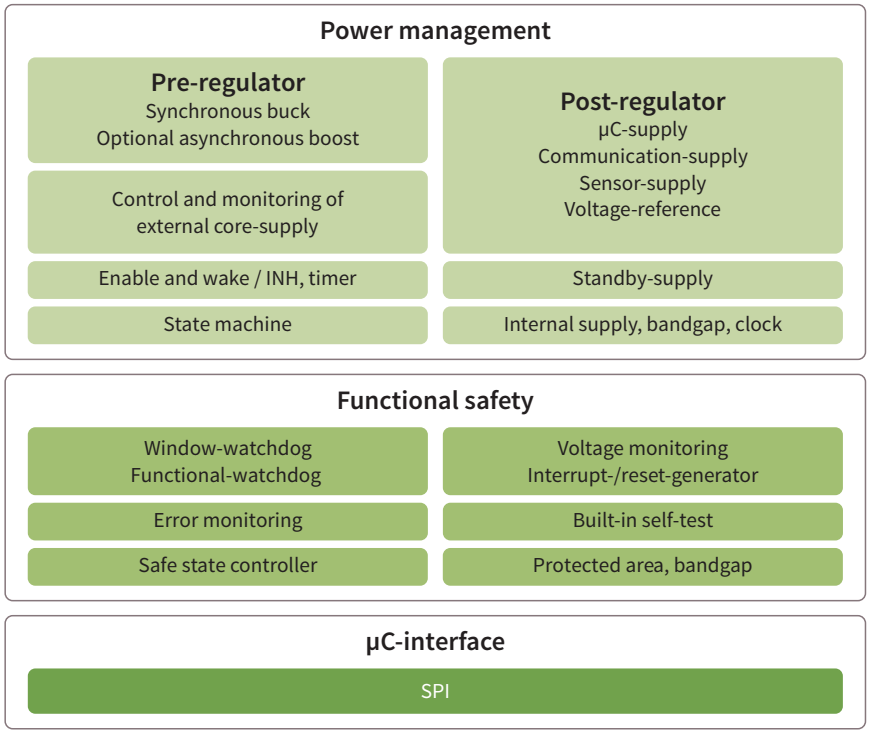

Applications

- Safety: EPS, braking, suspension, domain control, ADAS fusion box
- Powertrain: engine management, transmission, transfer case and starter generator
- Electrical drive train: battery management, inverter, DC-DC, charger

Pre-/post-regulator architecture for high efficiency

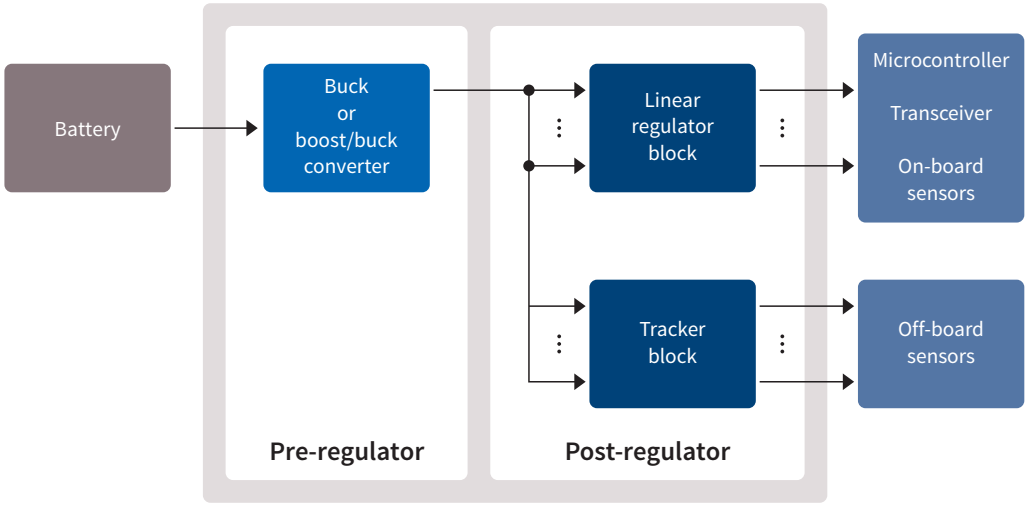

www.infineon.com/dcdc-converter

Downloaded from Arrow.com.

Application schematic

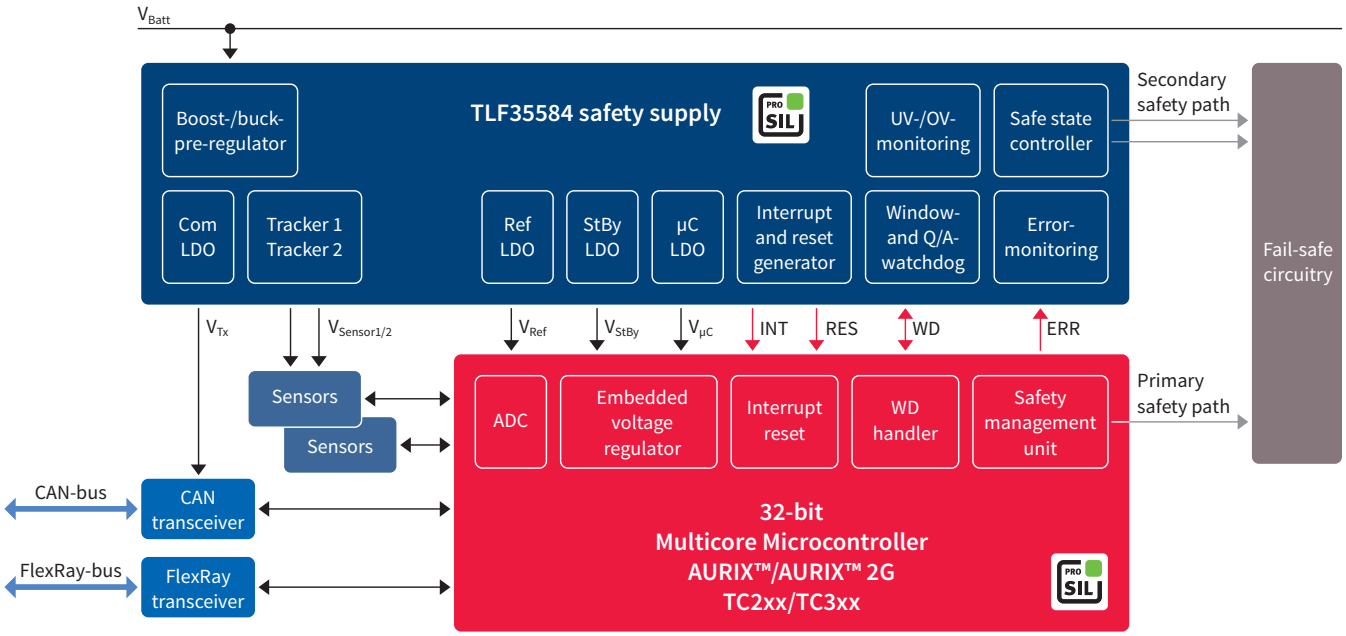

Key features

- V_{IN}: 3 V … 40 V
- Buck/boost-pre-regulator
  - I_Q = 1.3 A; f: 300 kHz – 2.5 MHz
- Post-regulators
  - µC-supply: 3.3 V/5 V at 600 mA
  - Reference-LDO: 5 V at 150 mA (±1 percent)
  - 2x tracker: 5 V at 150 mA
  - Communication-supply: 5 V at 200 mA
- Standby-LDO: 3.3 V/5 V at 10 mA
- EN/wake (T15 and CAN/FlexRay)
- Extended state machine
- SPI
- Safety features
  - Development acc. to ISO 26262
  - Multiple bandgap (supply versus V-monitoring)
  - UV/OV-monitoring of all rails
  - ERR-monitoring of µC's safety management unit
  - Functional-WD and window-WD with dedicated error-counters
  - Safe state control/secondary safety paths
  - Protected safety area/HV interconnects
  - Built-in self-test
- VQFN-48 EP and LQFP-64 EP (both thermally enhanced)

Key benefits

- Ensures operation during cold cranking
- High efficiency
- ADC-supply regardless of µC-load
- Precise sensor supply
- Flexible wake-up management
- Usage in applications with ASIL-requirements (up to ASIL-D)
- Avoids common cause failures thanks to independence and protection
- Application adaptable
  - Flexible monitoring concept
  - Flexible watchdog concept
  - Flexible safe state control and safety paths
- All safety features testable on demand
- Small footprint package (VQFN-48)
- Good thermal behavior

PRO SIL ISO26262 compliant

www.infineon.com/dcdc-converter

Downloaded from Arrow.com.

System supply

TLE7368/-2/-3 – optimized system supply for 32-bit µC

Application diagram

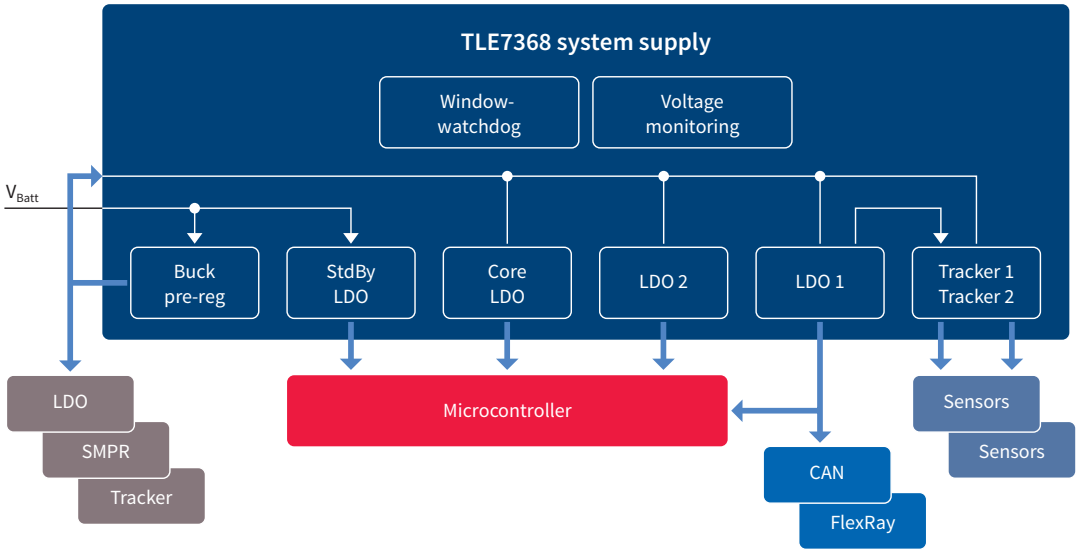

Key features

- Input voltage range from 4.5 to 45 V
- DC-DC buck pre-regulator to 5.5 V/2.5 A
  - Integrated slew-rate control
- Post-regulators for µC and on-board
  - LDO1: 5 V (±2 percent), 700 mA
  - LDO2: 3.3 V or 2.6 V (±2 percent), 500 mA
  - LDO3: control for ext. NPN
  - LDO3: 1.5 V, 1.2 V and 1.3 V (±2 percent)
  - 2 trackers for off-board supply: 5 V, 105 mA/50 mA
- Stand-by regulator for lowest current consumption
- 2 enable inputs
- Reset for all LDOs with adj. reset delay time
- Window watchdog with adj. timing
- Monitoring circuit for stand-by supply
- Power sequencing on contributing supplies
- Overcurrent protection for all regulators
- Overtemperature shutdown
- DSO-36 EP (thermally enhanced)

Key benefits

- Maintains operation under sensor short-circuit condition
- EME reduction (high frequency content)
- Power sequencing for proper start-up/ramp-down

Applications

- Powertrain: transmission, engine management
- Safety: EPS

Downloaded from Arrow.com.

DC-DC system supplies

Product name	$V_{S(op)}$ [V]	V_Q [V]	V_Q 2 [V]	V_Q 3 [V]	V_Q 4 [V]	V_Q additional [V]	Accuracy 1 [%]	Accuracy 2 [%]	Accuracy 3 [%]	Accuracy 4 [%]	Additional output accuracy	I_Q [mA]	I_Q 2 [mA]	I_Q 3 [mA]	I_Q 4 [mA]	I_Q additional [mA]	I_q [mA]	f_{sw} [kHz]	Stand-by regulator [V–mA]	PFM operation	Reset	Watchdog	SPI and add. logic	Enable/disable possibility	Early warning	Package[1]
Buck plus linear																										
TLE7368	4.50 … 45.00	5.50	5.00	2.60 or 3.30	1.50	2 x 5	-2.00 … +9.00	2	2	2	1.50	2500	800	700	Adj.	105 and 50	120	280 … 425	1.00/ 2.60–30.00		●	WWD		●		DSO-36 EP, DSO-36 (Power-SO)
TLE7368-2	4.50 … 45.00	5.50	5.00	2.60 or 3.30	1.20	2 x 5	-2.00 … +9.00	2	2	2	1.50	2500	800	700	Adj.	105 and 50	120	280 … 425	1.00/ 2.60–30.00		●	WWD		●		DSO-36 EP
TLE7368-3	4.50 … 45.00	5.50	5.00	2.60 or 3.30	1.30	2 x 5	-2.00 … +9.00	2	2	2	1.50	2500	800	700	Adj.	105 and 50	120	280 … 425	1.00/ 2.60–30.00		●	WWD		●		DSO-36 EP
TLE6368	5.50 … 60.00	5.50	5.00	2.60 or 3.30	2.60 or 3.30	6 x 5	10.00	5	5	5	1.00	1500	800	500	350	6 x 17	30	280 … 425	2.40–1.00		●	WWD	●	●		DSO-36 (Power-SO)
TLF35584	3.00 … 40.00	5.80	5.00 or 3.30	5.00	5.00	2 x 5	2.50	2	2	1	–	1300	600	200	150	2 x 150	50	400 … 2500	5.00 or 3.30/10.00	●	●	WWD/ FWD	●	●		LQFP-64, VQFN-48
Boost plus buck																										
TLE6711	4.50 … 45.00	27.50	5.00	–	–	–	12.00	2	–	–	–	1000	700	–	–	–	4	95			●	WWD				DSO-14, DSO-20

1) See packages on page 134 to 136

Downloaded from Arrow.com.



Transceivers

Due to the ever-increasing demand for data exchange in modern vehicles, the automotive industry implemented networks such as CAN (Controller Area Network), LIN (Local Interconnect Network) and FlexRay protocol-based bus systems.

Infineon offers a broad product portfolio of automotive transceivers – all of which are perfectly suited and designed to withstand the harsh automotive environment – for the various automotive bus segments.

Different transceiver types are used in accordance with the respective vehicle network architecture and the related ECU supply path. Infineon transceivers ensure reliable communication and help minimize the current consumption and associated CO_2 emissions at the vehicle level. Thanks to their high performance, ruggedness and reliable communication, Infineon's transceiver products offer the ultimate in value.

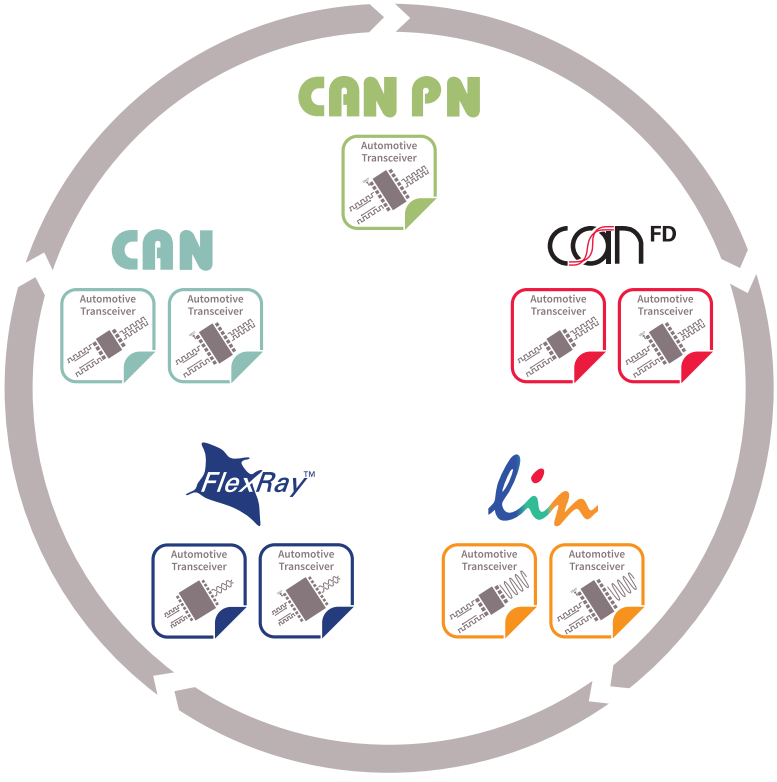

www.infineon.com/automotive-transceivers

Downloaded from Arrow.com.

Infineon offers a complete LIN portfolio including single and dual LIN transceivers as well as LIN-LDOs.

Selection tree – Automotive LIN transceivers

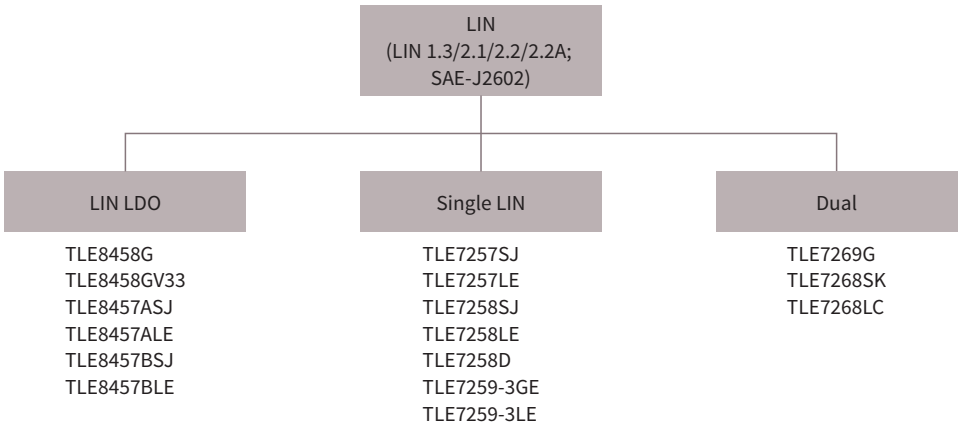

Product overview

Product name	Transmission rate (max)	Low-power mode I_q [µA] (max)	Bus wake-up capability	Wake-up inputs	Number of channels	Bus failure management	Fast programing	Package[1]
LIN LDO								
TLE8458G	20 kbit/s	< 12 sleep mode	●	●	1	●	●	DSO-8
TLE8458GV33	20 kbit/s	< 12 sleep mode	●	●	1	●	●	DSO-8
TLE8457ASJ	20 kbit/s	< 16 sleep mode	●		1	●		DSO-8
TLE8457ALE	20 kbit/s	< 16 sleep mode	●		1	●		TSON-8
TLE8457BSJ	20 kbit/s	< 16 sleep mode	●		1	●		DSO-8
TLE8457BLE	20 kbit/s	< 16 sleep mode	●		1	●		TSON-8
Single LIN								
TLE6258-2G	20 kbit/s	< 40 sleep mode	●		1			DSO-8
TLE7257SJ	20 kbit/s	< 15 sleep mode	●		1	●		DSO-8
TLE7257LE	20 kbit/s	< 15 sleep mode	●		1	●		TSON-8
TLE7258SJ	20 kbit/s	< 15 sleep mode	●		1	●		DSO-8
TLE7258LE	20 kbit/s	< 15 sleep mode	●		1	●		TSON-8
TLE7258D	20 kbit/s	< 15 sleep mode	●		1	●		TSON-8
TLE7259-3GE	20 kbit/s	< 10 sleep mode	●	●	1	●	●	DSO-8
TLE7259-3LE	20 kbit/s	< 10 sleep mode	●	●	1	●	●	TSON-8
Dual LIN								
TLE7269G	20 kbit/s	< 10 sleep mode	●	●	2	●	●	DSO-14
TLE7268LC	20 kbit/s	< 20 sleep mode	●		2	●		TSON-14
TLE7268SK	20 kbit/s	< 20 sleep mode	●		2	●		DSO-14

1) See packages on page 134 to 136

www.infineon.com/automotive-transceivers

Downloaded from Arrow.com.



Transceivers

CAN → Classical CAN transceivers are available in standard DSO-8 and DSO-14 packages, along with tiny leadless TSON-8 packages.

CAN FD → CAN transceivers for Flexible Data-rate are making CAN faster and do support data-rates up to 5 Mbits/s.

CAN PN → CAN transceivers for partial networking are improving energy efficiency and making cars greener.

Block diagram example of high-speed CAN: TLE9250V

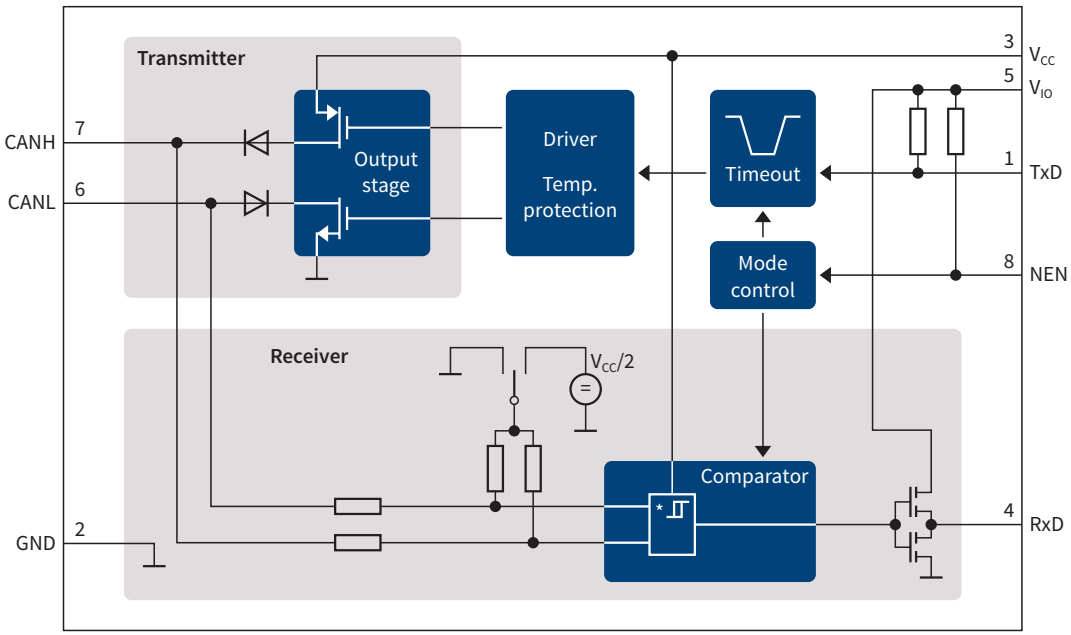

www.infineon.com/automotive-transceivers

Downloaded from Arrow.com.

Selection tree – Automotive CAN and CAN FD transceivers

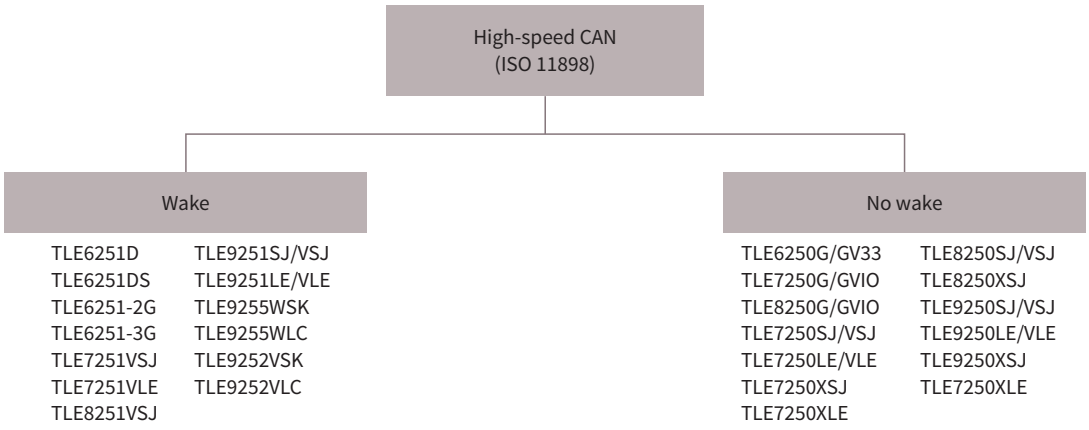

Product overview

	Product name	Transmission rate (max)	Low-power mode I_q [µA] (max)	Bus wake-up capability	Wake-up inputs	Number of channels	Bus failure management	CAN FD	Package[1]
High-speed CAN ISO 11898-2									
	TLE6250G	1 Mbit/s	< 10 @ 5 V stand-by			1			DSO-8
	TLE6250GV33	1 Mbit/s	< 10 @ 5 V stand-by			1			DSO-8
	TLE7250G	1 Mbit/s	< 15 @ 5 V stand-by			1			DSO-8
	TLE7250GVIO	1 Mbit/s	< 15 @ 5 V stand-by			1			DSO-8
	TLE8250G	1 Mbit/s	< 15 @ 5 V stand-by			1			DSO-8
	TLE8250GVIO	1 Mbit/s	< 15 @ 5 V stand-by			1			DSO-8
	TLE7250SJ TLE8250SJ CAN FD	2 Mbit/s	< 12 @ 5 V power save mode			1		●	DSO-8
	TLE7250LE CAN FD	2 Mbit/s	< 12 @ 5 V power save mode			1		●	TSON-8
	TLE7250VSJ TLE8250VSJ CAN FD	2 Mbit/s	< 8 @ 5 V power save mode			1		●	DSO-8
	TLE7250VLE CAN FD	2 Mbit/s	< 8 @ 5 V power save mode			1		●	TSON-8
	TLE7250XSJ TLE8250XSJ CAN FD	2 Mbit/s	n/a			1		●	DSO-8
	TLE7250XLE CAN FD	2 Mbit/s	n/a			1		●	TSON-8
NEW	TLE9250SJ CAN FD	5 Mbit/s	< 20 @ 5 V power save mode			1		●	DSO-8
NEW	TLE9250LE CAN FD	5 Mbit/s	< 20 @ 5 V power save mode			1		●	TSON-8
NEW	TLE9250VSJ CAN FD	5 Mbit/s	< 15 @ 5 V power save mode			1		●	DSO-8
NEW	TLE9250VLE CAN FD	5 Mbit/s	< 15 @ 5 V power save mode			1		●	TSON-8
NEW	TLE9250XSJ CAN FD	5 Mbit/s	n/a			1		●	DSO-8
NEW	TLE9250XLE CAN FD	5 Mbit/s	n/a			1		●	TSON-8

1) See packages on page 134 to 136

www.infineon.com/automotive-transceivers

Downloaded from Arrow.com.

Transceivers

Product overview

	Product name	Transmission rate (max)	Low-power mode I_q [µA] (max)	Bus wake-up capability	Wake-up inputs	Number of channels	Bus failure management	CAN FD	Package[1]
	High-speed CAN ISO 11898-5								
	TLE6251D	1 Mbit/s	< 25 @ 5 V stand-by	●		1			DSO-8
	TLE6251DS	1 Mbit/s	< 30 @ 5 V stand-by	●		1			DSO-8
	TLE6251-2G	1 Mbit/s	< 30 sleep mode	●	●	1	●		DSO-14
	TLE6251-3G	1 Mbit/s	< 30 sleep mode	●	●	1	●		DSO-14
	TLE7251VSJ TLE8251VSJ CAN FD	2 Mbit/s	< 14 µA @ 5 V stand-by	●		1		●	DSO-8
	TLE7251VLE CAN FD	2 Mbit/s	< 14 µA @ 5 V stand-by	●		1		●	TSON-8
NEW	TLE9251VSJ CAN FD	5 Mbit/s	< 15 µA @ 5 V stand-by	●		1		●	DSO-8
NEW	TLE9251VLE CAN FD	5 Mbit/s	< 15 µA @ 5 V stand-by	●		1		●	TSON-8
NEW	TLE9251SJ CAN FD	5 Mbit/s	< 15 µA @ 5 V stand-by	●		1		●	DSO-8
NEW	TLE9251LE CAN FD	5 Mbit/s	< 15 µA @ 5 V stand-by	●		1		●	TSON-8
NEW	TLE9255WSK CAN PN CAN FD	5 Mbit/s	< 26 sleep mode	●	●	1		●	DSO-14
NEW	TLE9255WLC CAN PN CAN FD	5 Mbit/s	< 26 sleep mode	●	●	1		●	TSON-14
NEW	TLE9252VSK CAN FD	5 Mbit/s	< 26 sleep mode	●	●	1		●	DSO-14
NEW	TLE9252VLC CAN FD	5 Mbit/s	< 26 sleep mode	●	●	1		●	TSON-14
	Fault-tolerant CAN ISO 11898-3								
	TLE6254-3G	125 kbit/s	< 65 sleep mode	●	●	1	●		DSO-14

1) See packages on page 134 to 136

FlexRay™

Infineon provides FlexRay transceivers in SSOP-16, TSSOP-14 and the world's smallest FlexRay in TSON-14 package for reliable communication in safety-related applications.

Product overview

	Product name	Transmission rate (max)	I_q [µA]	Bus wake-up capability	Wake-up inputs	Number of channels	Bus failure management	Package[1]
	FLexRay							
	TLE9221SX	10 Mbit/s	< 45 sleep mode	●	●	1	●	SSOP-16
	TLE9222PX	10 Mbit/s	< 45 stand-by mode	●		1	●	TSSOP-14
NEW	TLE9222LC	10 Mbit/s	< 45 stand-by mode	●		1	●	TSON-14

1) See packages on page 134 to 136

OEM HAL AEC Qualified RoHS

www.infineon.com/automotive-transceivers

Downloaded from Arrow.com.

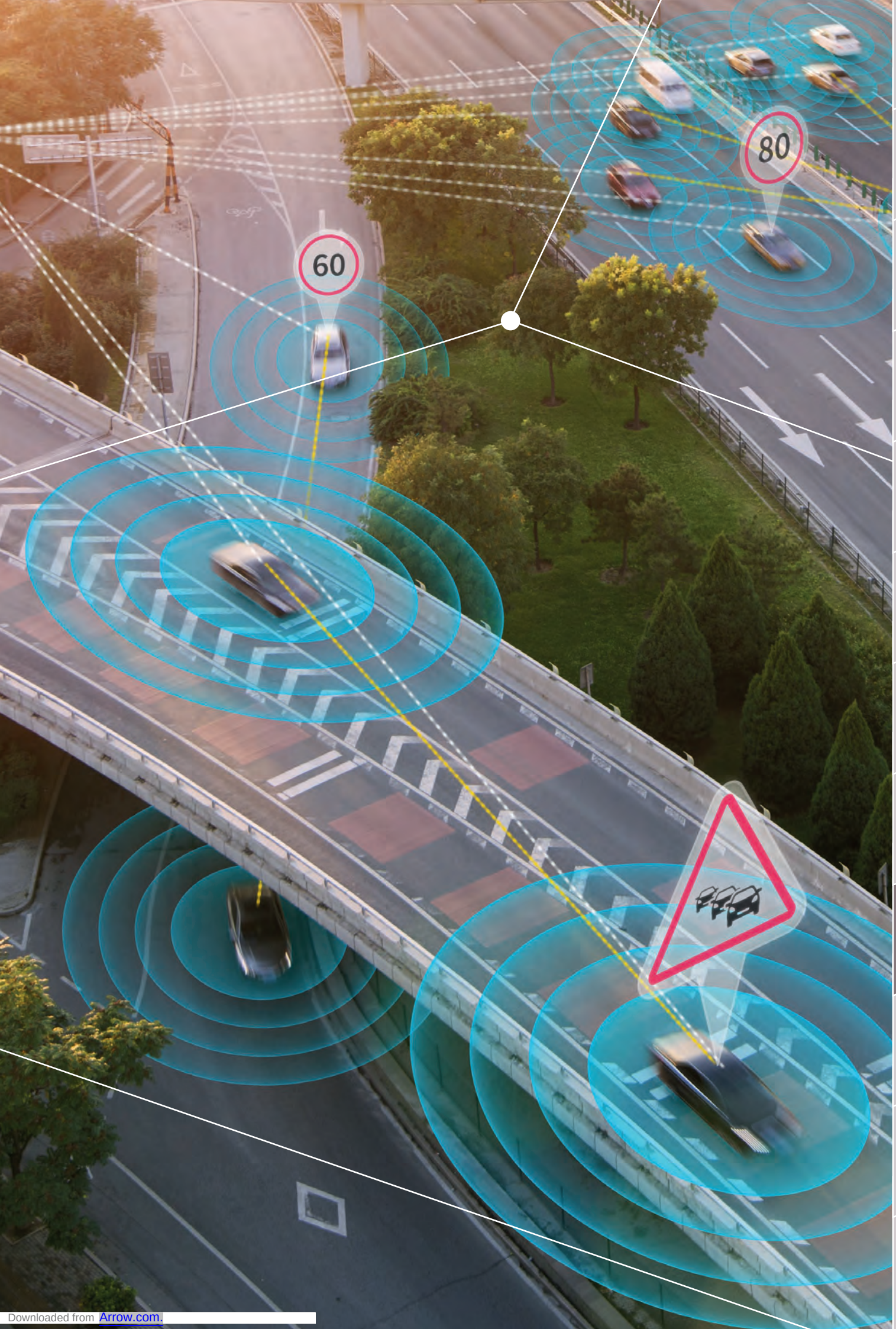

Downloaded from Arrow.com.

System Basis Chips (SBCs)

Mid-Range+ System Basis Chip family supporting CAN Flexible Data-rate (FD) and Partial Networking (PN)

Infineon's highly integrated Mid-Range+ System Basis Chip (SBC) family TLE926xB offers best performance and scalability for various automotive applications. The Mid-Range+ SBCs feature three low-drop voltage regulators with 5 V or 3.3 V output voltage options for microcontroller, network transceivers, sensors and other peripherals' power supply. As communication interfaces they incorporate one CAN transceiver (including Partial Networking option) with Flexible Data-rate performance up to 5 Mbit/s and up to two LIN transceivers complying with the latest automotive standards and OEM requirements. The devices include diagnostic and supervision features for support of ECU functional safety concepts like undervoltage monitoring, window watchdog with reset, fail-safe operating mode, and fail-safe outputs. Four high-side switches are available in order to drive external loads, three wake-inputs and two General Purpose Input-Outputs (GPIOs) allow monitoring of inputs or activation of loads. The Mid-Range+ SBCs can be put into low power modes with full wake capability for very low quiescent current consumption in order to support applications that are connected permanently to the battery. All devices feature an exposed pad VQFN-48 (7 mm x 7 mm) power package supporting Automatic Optical Inspection (AOI). The entire family is pin-to–pin and software compatible, also to other Infineon SBC families, and is designed to withstand the severe conditions of automotive applications.

Key features

- Integrated low-drop voltage regulator (5 V or 3.3 V up to 250 mA)
- Integrated low-drop voltage regulator (5 V up to 100 mA), protected for off-board usage
- Voltage regulator (5 V, 3.3 V or 1.8 V) with external PNP transistor, protected for off-board usage or for load-sharing
- 1 CAN transceiver supporting FD communication up to 5 Mbit/s according ISO 11898-2:2016
- CAN Partial Networking FD tolerant mode
- 2 LIN transceivers LIN2.2/J2602
- 4 high-side outputs 7 Ω typ.
- 2 HV GPIOs, 3 HV wake inputs
- Interrupt, reset output
- Integrated fail-safe functions: 3 fail-safe outputs, watchdog, fail-safe operating modes
- 16-bit SPI for configuration and diagnostics
- Voltage, current and temperature protection and monitoring

Key benefits

- Reduced system cost through low component count and small PCB footprint
- Low-drop voltage regulators for on- and off-board supply
- Wide supply input voltage and temperature range
- High-performance network transceivers
- Flexible number of integrated LIN transceivers
- Very low quiescent current modes
- Very small package supporting AOI
- Pin and software compatibility amongst all family members
- Excellent EMC and ESD performance meeting major car OEM requirements

Target applications

- Body Control Modules (BCM) and Gateways
- Heating, ventilation and air conditioning (HVAC)
- Door, roof, tailgate, trailer and closure modules
- Passive keyless entry, passive start modules
- Seat control modules
- Light control modules
- Gear shifters and selectors

HAL AEC Qualified RoHS

www.infineon.com/sbc

Downloaded from Arrow.com.

Application diagram

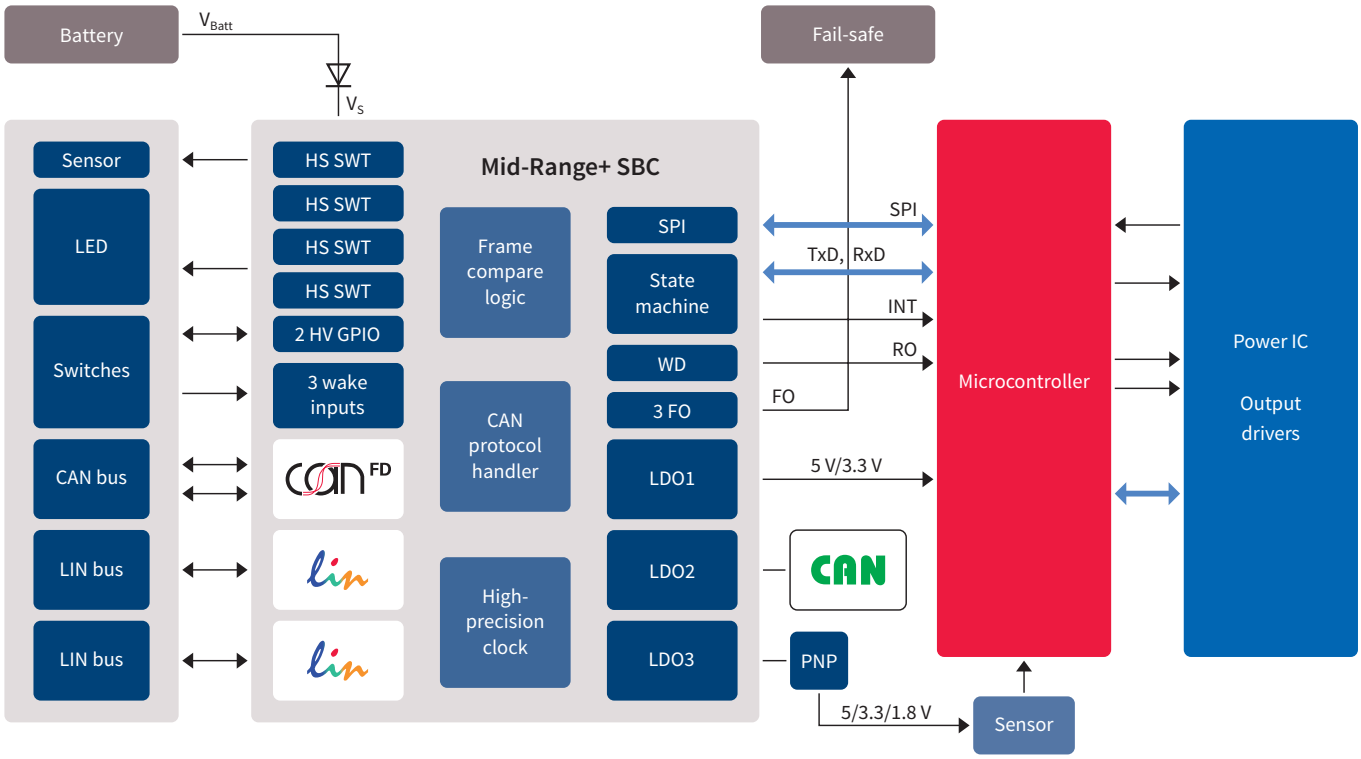

Family overview

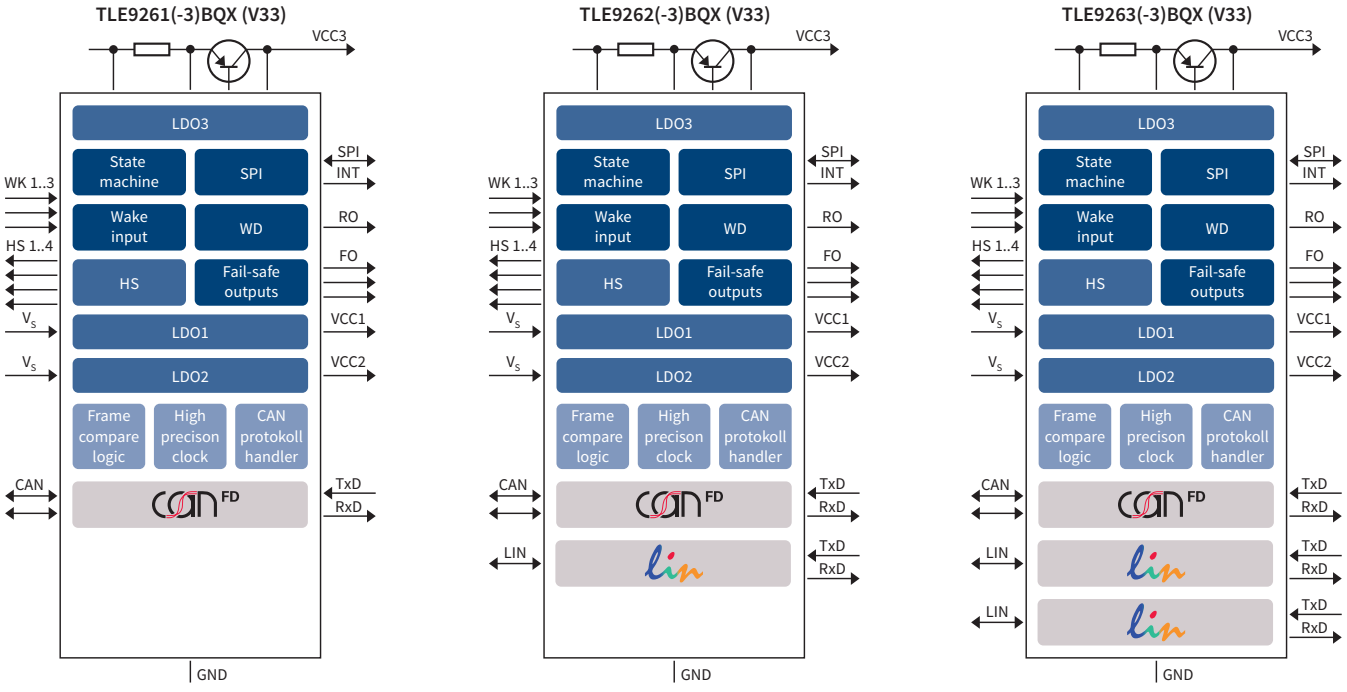

www.infineon.com/sbc

Downloaded from Arrow.com.

System Basis Chips (SBCs)

DC-DC System Basis Chip family supporting CAN Flexible Data-rate (FD)

Infineon's highly integrated DC-DC System Basis Chip (SBC) family TLE927xQX offers optimal performance and scalability for various automotive applications. DC-DC SBC features a switch mode power supply voltage regulator (SMPS) with 5 V or 3.3 V output voltage, one 5 V low-drop voltage regulator, one CAN FD and up to four LIN transceivers complying with the latest automotive standards and OEM requirements. The devices include fail-safe features for supporting ECU functional safety concepts, high-voltage wake-input for monitoring inputs, along with a very low quiescent current in low-power modes with full wake-up capability. All devices feature an exposed pad VQFN-48 (7 mm x 7 mm) power package (supporting AOI). The entire family is not only pin-to-pin and software compatible, but also compatible with other Infineon SBC families, and is designed to withstand the severe conditions of automotive applications.

Key features

- Integrated high-efficiency SMPS buck converter with edge shaping for an optimized EMC performance (5 V or 3.3 V up to 750 mA)
- The SMPS boost controller with edge shaping for an optimized EMC performance enables functionality at a low supply voltage (V_{SUP} > 3 V) with external power switching
- Integrated low-drop voltage regulator (5 V up to 100 mA) protected for off-board usage
- 1 CAN transceiver supporting ISO 11898-2 CAN Flexible Data-rate (CAN FD) up to 5 Mbps
- Up to 4 LIN transceivers LIN2.2/J2602
- Fully compliant with "Hardware Requirements for LIN, CAN and FlexRay Interfaces in Automotive Applications" Revision 1.3, 2012-05-04
- 1 HV wake input for switch status monitoring
- Interrupt, reset output
- Integrated fail-safe functions:
  3 fail-safe outputs, 1 fail-safe input, watchdog, fail-safe operating modes
- 16-bit SPI for configuration and diagnostics (compatible with all new-generation SBC TLE926x and TLE927x)
- Voltage, current and temperature protection and monitoring

Key benefits

- High-efficiency SMPS buck and boost for supplying high current even at low battery voltage
- Low-drop voltage regulator for on- and off-board supply
- Flexible number of integrated LIN transceivers
- Very low quiescent current
- Very small leadless package supporting AOI
- Pin compatibility among all family members
- Wide supply input voltage and temperature range
- Reduced system cost thanks to a low component count and less PCB space
- Excellent EMC and ESD performance meeting major automotive OEM requirements

Target applications

- Body control modules
- Gateway
- Climate control

Downloaded from Arrow.com.

TLE9273 application diagram

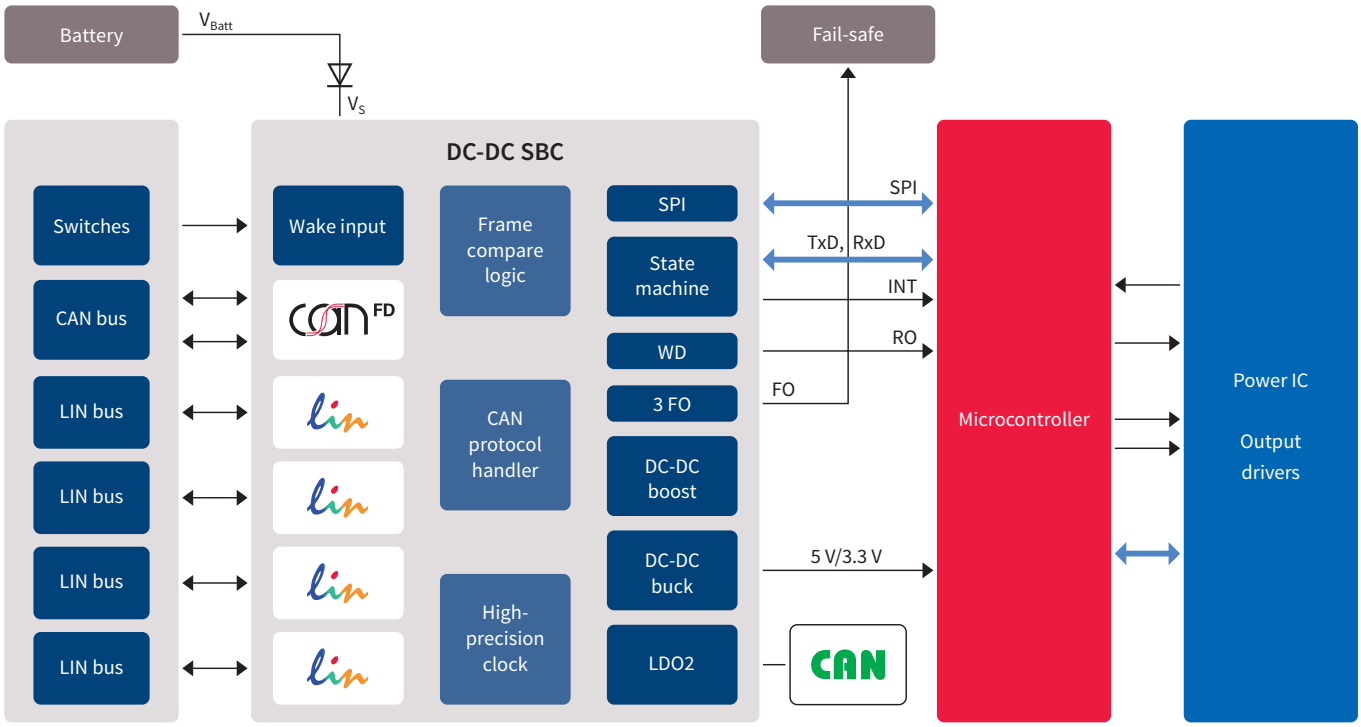

DC-DC System Basis Chip family overview

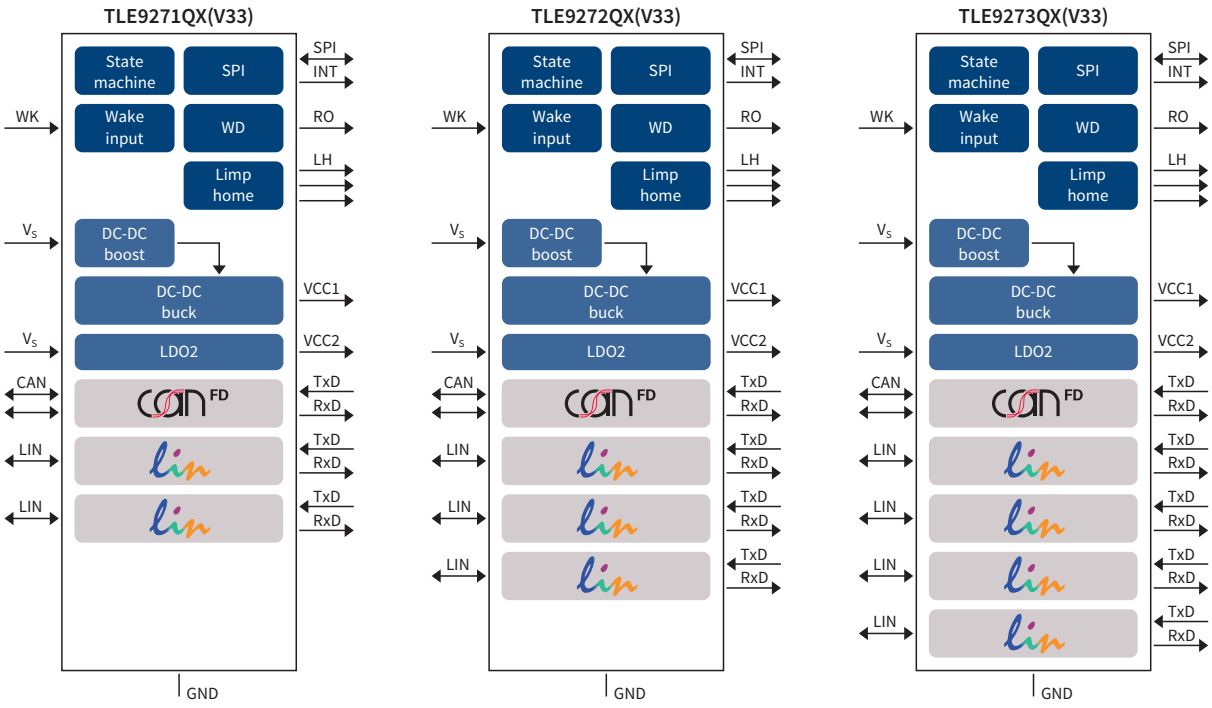

www.infineon.com/sbc

Downloaded from Arrow.com.

System Basis Chips (SBCs)

Multi-CAN Power System Basis Chip family supporting CAN Flexible Data-rate (FD) and Partial Networking (PN)

Infineon's Multi-CAN Power System Basis Chip (SBC) TLE9278 family offers the highest level of integration at smallest footprint for automotive applications requiring multiple channels of CAN transceivers like gateways and high-end Body Control Modules (BCM).

A high-efficient Switch Mode Power supply (SMPS) buck regulator provides an external 5 V or 3.3 V output voltage at up to 750 mA while an additional DC-DC boost converter supports applications or conditions at low supply input voltages.

Key features

- 4x CAN Flexible Data-rate transceivers up to 5 Mbit/s
- Partial Networking w/ "-3" variants
- Buck regulator up to 750 mA
- Boost controller at 6.5/8/10/12 V
- 16-bit serial peripheral interface
- Time-out/window watchdog
- Failsafe-output
- Low power modes
- 7 x 7 mm VQFN package

Key benefits

- Highly integrated solution for multi-Channel CAN applications
- Highly efficient power supply
- High power for strong processors
- Tolerant to low voltage line drops
- Easy configuration and control
- Advanced diagnostics functions
- Failsafe functions for safety
- Power saving modes
- Minimal PCB footprint

TLE9278 application diagram

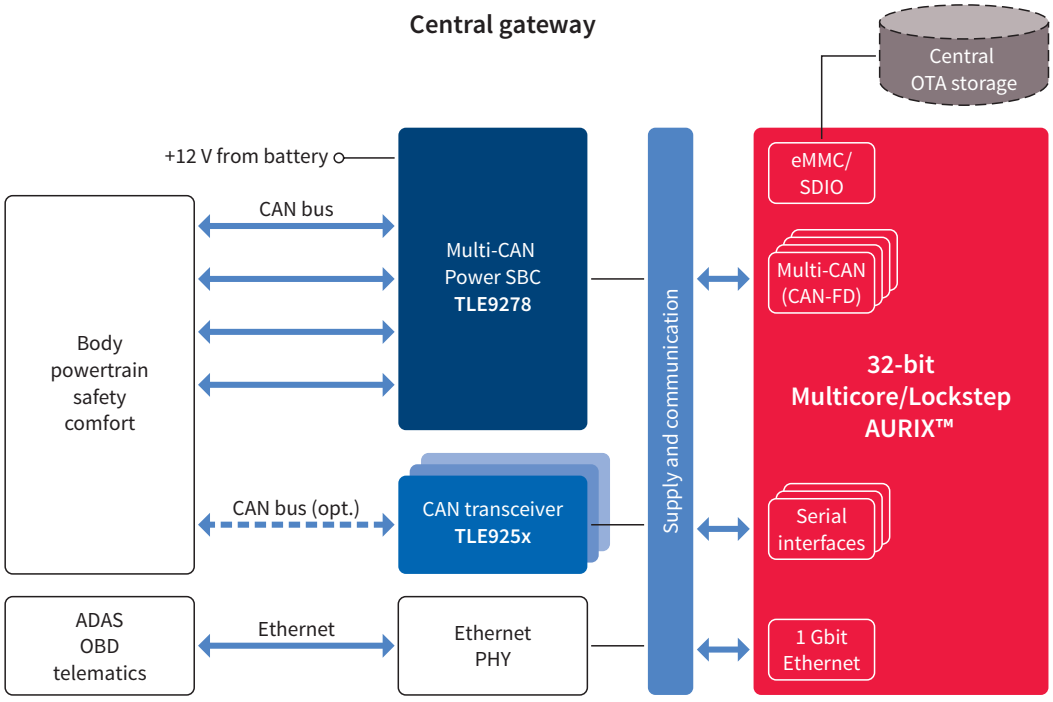

AEC Qualified

RoHS

www.infineon.com/sbc

Downloaded from Arrow.com.

Body System ICs – System Basis Chips product overview

	Product name	Family name	Transmission rate	I_q [µA]	I_Q [µA]	$V_{reg}1$ [V]	$V_{reg}2$ [V]	$V_{reg}3$ [V]	CAN	LIN	Partial networking support	Wake-up inputs	Watchdog	Output drivers	Package[1]
CAN ISO 11898-2 / LIN 2.2A															
NEW	TLE9261BQX(V33)	Mid-Range+ SBC	5 Mbit/s (CAN)	30 (typ) sleep mode (V_{reg} 1 off)	50 (typ) stop mode (V_{reg} 1 on)	250 mA @ 5 V (3.3 V on V33 variant)	100 mA @ 5 V	400 mA @ 5 V/3.3 V (3.3 V/1.8 V avail. on V33 variant)	1x CAN FD	–	No	3 high-voltage (cyclic sense)	Yes (window watchdog)	4x high-side switch 150 mA, 3 fail-safe outputs	VQFN-48
NEW	TLE9261-3BQX(V33)	Mid-Range+ SBC	5 Mbit/s (CAN)	30 (typ) sleep mode (V_{reg} 1 off)	50 (typ) stop mode (V_{reg} 1 on)	250 mA @ 5 V (3.3 V on V33 variant)	100 mA @ 5 V	400 mA @ 5 V/3.3 V (3.3 V/1.8 V avail. on V33 variant)	1x CAN FD	–	Yes	3 high-voltage (cyclic sense)	Yes (window watchdog)	4x high-side switch 150 mA, 3 fail-safe outputs	VQFN-48
NEW	TLE9262BQX(V33)	Mid-Range+ SBC	5 Mbit/s (CAN) 20 kbit/s 10.4 kbit/s (LIN)	30 (typ) sleep mode (V_{reg} 1 off)	50 (typ) stop mode (V_{reg} 1 on)	250 mA @ 5 V (3.3 V on V33 variant)	100 mA @ 5 V	400 mA @ 5 V/3.3 V (3.3 V/1.8 V avail. on V33 variant)	1x CAN FD	1x LIN 2.x and SAE J2602	No	3 high-voltage (cyclic sense)	Yes (window watchdog)	4x high-side switch 150 mA, 3 fail-safe outputs	VQFN-48
NEW	TLE9262-3BQX(V33)	Mid-Range+ SBC	5 Mbit/s (CAN) 20 kbit/s 10.4 kbit/s (LIN)	30 (typ) sleep mode (V_{reg} 1 off)	50 (typ) stop mode (V_{reg} 1 on)	250 mA @ 5 V (3.3 V on V33 variant)	100 mA @ 5 V	400 mA @ 5 V/3.3 V (3.3 V/1.8 V avail. on V33 variant)	1x CAN FD	1x LIN 2.x and SAE J2602	Yes	3 high-voltage (cyclic sense)	Yes (window watchdog)	4x high-side switch 150 mA, 3 fail-safe outputs	VQFN-48
NEW	TLE9263BQX(V33)	Mid-Range+ SBC	5 Mbit/s (CAN) 20 kbit/s 10.4 kbit/s (LIN)	30 (typ) sleep mode (V_{reg} 1 off)	50 (typ) stop mode (V_{reg} 1 on)	250 mA @ 5 V (3.3 V on V33 variant)	100 mA @ 5 V	400 mA @ 5 V/3.3 V (3.3 V/1.8 V avail. on V33 variant)	1x CAN FD	2x LIN 2.x and SAE J2602	No	3 high-voltage (cyclic sense)	Yes (window watchdog)	4x high-side switch 150 mA, 3 fail-safe outputs	VQFN-48
NEW	TLE9263-3BQX(V33)	Mid-Range+ SBC	5 Mbit/s (CAN) 20 kbit/s 10.4 kbit/s (LIN)	30 (typ) sleep mode (V_{reg} 1 off)	50 (typ) stop mode (V_{reg} 1 on)	250 mA @ 5 V (3.3 V on V33 variant)	100 mA @ 5 V	400 mA @ 5 V/3.3 V (3.3 V/1.8 V avail. on V33 variant)	1x CAN FD	2x LIN 2.x and SAE J2602	Yes	3 high-voltage (cyclic sense)	Yes (window watchdog)	4x high-side switch 150 mA, 3 fail-safe outputs	VQFN-48
	TLE9260QX	Mid-Range SBC	1 Mbit/s (CAN)	30 (typ) sleep mode (V_{reg} 1 off)	50 (typ) stop mode (V_{reg} 1 on)	250 mA @ 5 V	100 mA @ 5 V	–	1x High-speed CAN	–	No	3 high-voltage (cyclic sense)	Yes (window watchdog)	4x high-side switch 150 mA, 3 fail-safe outputs	VQFN-48
	TLE9261QX	Mid-Range SBC	1 Mbit/s (CAN)	30 (typ) sleep mode (V_{reg} 1 off)	50 (typ) stop mode (V_{reg} 1 on)	250 mA @ 5 V	100 mA @ 5 V	400 mA @ 5 V/3.3 V	1x High-speed CAN	–	No	3 high-voltage (cyclic sense)	Yes (window watchdog)	4x high-side switch 150 mA, 3 fail-safe outputs	VQFN-48

1) See packages on page 134 to 136

Downloaded from Arrow.com.

System Basis Chips (SBCs)

Body System ICs – System Basis Chips product overview (cont'd)

Product name	Family name	Transmission rate	I_q [µA]	I_Q [µA]	$V_{reg}1$ [V]	$V_{reg}2$ [V]	$V_{reg}3$ [V]	CAN	LIN	Partial networking support	Wake-up inputs	Watchdog	Output drivers	Package[1]
TLE9262QX	Mid-Range SBC	1 Mbit/s (CAN) 20 kbit/s 10.4 kbit/s (LIN)	30 (typ) sleep mode (V_{reg} 1 off)	50 (typ) stop mode (V_{reg} 1 on)	250 mA @ 5 V	100 mA @ 5 V	400 mA @ 5 V/3.3 V	1x High-speed CAN	1x LIN 2.x and SAE J2602	No	3 high-voltage (cyclic sense)	Yes (window watchdog)	4x high-side switch 150 mA, 3 fail-safe outputs	VQFN-48
TLE9263QX	Mid-Range SBC	1 Mbit/s (CAN) 20 kbit/s 10.4 kbit/s (LIN)	30 (typ) sleep mode (V_{reg} 1 off)	50 (typ) stop mode (V_{reg} 1 on)	250 mA @ 5 V	100 mA @ 5 V	400 mA @ 5 V/3.3 V	1x High-speed CAN	2x LIN 2.x and SAE J2602	No	3 high-voltage (cyclic sense)	Yes (window watchdog)	4x high-side switch 150 mA, 3 fail-safe outputs	VQFN-48
TLE9271QX(V33)[2]	DC-DC SBC	5 Mbit/s (CAN) 20 kbit/s 10.4 kbit/s (LIN)	30 (typ) sleep mode (V_{reg} 2 off)	55 (typ) stop mode (V_{reg} 2 off)	750 mA @ 5 V (3.3 V on V33 variant)	100 mA @ 5 V	–	1x CAN FD	2x LIN 2.x and SAE J2602	No	1 high-voltage	Yes (window watchdog)	3 fail-safe outputs	VQFN-48
TLE9272QX(V33)[2]	DC-DC SBC	5 Mbit/s (CAN) 20 kbit/s 10.4 kbit/s (LIN)	30 (typ) sleep mode (V_{reg} 2 off)	55 (typ) stop mode (V_{reg} 2 off)	750 mA @ 5 V (3.3 V on V33 variant)	100 mA @ 5 V	–	1x CAN FD	3x LIN 2.x and SAE J2602	No	1 high-voltage	Yes (window watchdog)	3 fail-safe outputs	VQFN-48
TLE9273QX(V33)[2]	DC-DC SBC	5 Mbit/s (CAN) 20 kbit/s 10.4 kbit/s (LIN)	30 (typ) sleep mode (V_{reg} 2 off)	55 (typ) stop mode (V_{reg} 2 off)	750 mA @ 5 V (3.3 V on V33 variant	100 mA @ 5 V	–	1x CAN FD	4x LIN 2.x and SAE J2602	No	1 high-voltage	Yes (window watchdog)	3 fail-safe outputs	VQFN-48
TLE9278QX	Multi-CAN Power SBC	5 Mbit/s	30	55	750 mA @ 5 V		400 mA @ 5 V/3.3 V/ 1.8 V/1.2 V	4x CAN FD		No	1 high-voltage	Yes (window watchdog)	1 fail-safe output	VQFN-48
TLE9278-3QX	Multi-CAN Power SBC	5 Mbit/s	30	55	750 mA @ 3.3 V		400 mA @ 5 V/3.3 V/ 1.8 V/1.2 V	4x CAN FD		Yes	1 high-voltage	Yes (window watchdog)	1 fail-safe output	VQFN-48
TLE9278QX V33	Multi-CAN Power SBC	5 Mbit/s	30	55	750 mA @ 3.3 V		400 mA @ 5 V/ 3.3 V/ 1.8 V/1.2 V	4x CAN FD		No	1 high-voltage	Yes (window watchdog)	1 fail-safe output	VQFN-48
TLE9278-3QX V33	Multi-CAN Power SBC	5 Mbit/s	30	55	750 mA @ 3.3 V		400 mA @ 5 V/ 3.3 V/ 1.8 V/1.2 V	4x CAN FD		Yes	1 high-voltage	Yes (window watchdog)	1 fail-safe output	VQFN-48

1) See packages on page 134 to 136
2) Coming Q1/ 2018

Downloaded from Arrow.com.

Powertrain system ICs

Constant current control ICs

Infineon's solution for variable force or constant current controlled solenoids typically used in automatic transmissions, idle speed-/valve-/suspension control or Exhaust Gas Recirculation (EGR) applications

Features

- Four integrated low-side switches, control logic and outputs for external high-side switches
- Shorted-load detection
- Open-load detection in ON-/OFF-state
- Short-to-ground detection
- Max. output average current approx. 1.2 A

Block diagram TLE8242-2L

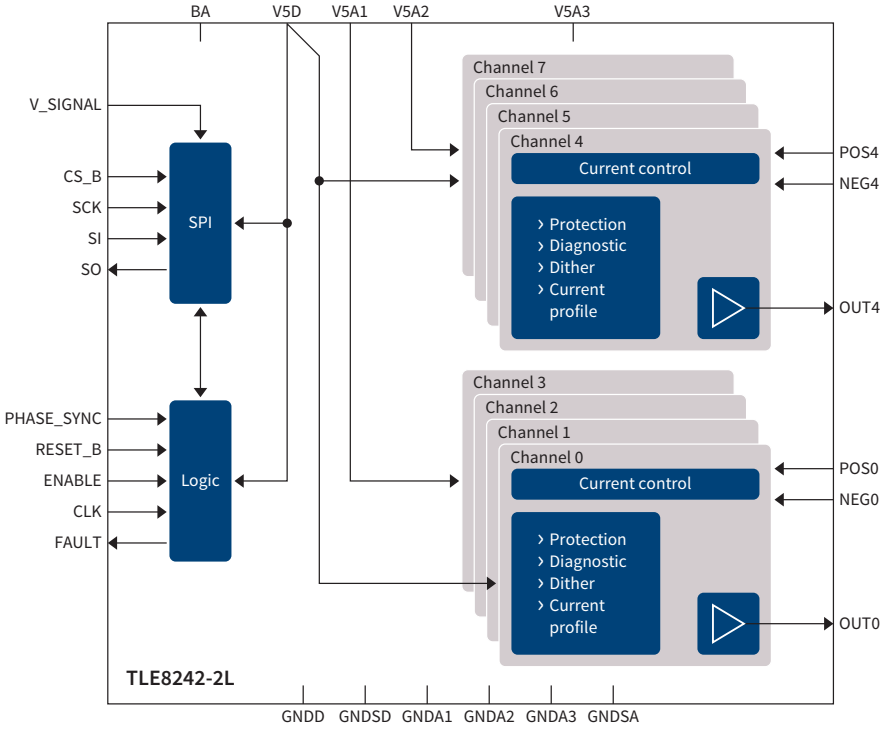

Product name	Number of channels	Output current [A]	$R_{DS(on)}$ [mΩ]	Quiescent current [mA]	Operational range V_S [V]	SPI	Comment	Package[1)]
TLE6288R	6	2.00	150	0.050	6.00 … 16.00	16-bit	Smart 6 channel peak and hold switch	DSO-36 (Power-SO)
TLE7241E	2	1.20	240	1.000	9.00 … 18.00	16-bit	Dual channel constant current control solenoid driver	DSO-20
TLE7242-2G	4	n/a	n/a	0.005	5.50 … 42.00	32-bit	4-Channel fixed frequency constant current control IC	DSO-28
TLE8242-2L	8	n/a	n/a	0.005	5.50 … 42.00	32-bit	8-Channel fixed frequency constant current control IC	LQFP-64
TLE82543-3SA	3	1.60	250 (max)	0.010	5.50 … 17.00	32-bit	3-Channel high/low-side configurable constant	DSO-36 (Power-SO)
TLE82452-3SA	2	1.60	250 (max)	0.010	5.50 … 17.00	32-bit	2-Channel high/low-side configurable constant	DSO-36 (Power-SO)
TLE82463-3SA	3	1.60	250 (max)	0.010	5.50 … 17.00	32-bit	3-Channel low-side constant	DSO-36 (Power-SO)
TLE82462-3SA	2	1.60	250 (max)	0.010	5.50 … 17.00	32-bit	2-Channel lows-ide constant	DSO-36 (Power-SO)

1) See packages on page 134 to 136

www.infineon.com/powertrain-ic

Downloaded from Arrow.com.

Powertrain system ICs

H-bridges for powertrain applications

The Infineon H-bridge portfolio addresses a broad range of DC brush motor applications. Originally designed and optimized for Electronic Throttle Control (ETC), the H-bridges can also be used for applications like Exhaust Gas Recirculation (EGR) valve control, idle control, swirl and tumble flaps, variable intake manifold, turbo charger waste gate, variable turbo geometry or industrial DC brush motor applications.

Product name	$R_{DS(on)}$ HS [mΩ]	$R_{DS(on)}$ LS [mΩ]	I_{LIM} min. [A]	I_Q max. [mA]	$V_{S(OP)}$ [V]	Diagnostic IF	V_{DD} mon.	Package[1]
TLE5205-2G	220	220	6.00	10.00	6.00 … 40.00	Status flag		TO263-7 (D^2PAK 7-leg)
TLE5206-2S	220	220	6.00	10.00	6.00 … 40.00	Status flag		TO220-7-12
TLE6209R	140	130	3.40 … 5.95	0.05	5.20 … 40.00	SPI		DSO-20 (Power-SO)
TLE7209-3R	150	150	5.50	20.00	5.00 … 28.00	SPI and status flag		DSO-20 (Power-SO)
TLE8209-2SA	115	125	1.00 … 7.70	0.02	4.50 … 28.00	SPI and status flag	●	DSO-20 (Power-SO)
TLE9201SG	100	100	6.00	0.03	5.00 … 28.00	SPI and status flag		DSO-12
TLE9202ED[2]	100	100	6.00	0.03	5.00 … 28.00	SPI and status flag		DSO-36 (Dual gauge)

1) See packages on page 134 to 136
2) Coming Q4/2017

Flex multichannel low-side switches (powertrain and safety)

Multichannel low-side switches are designed for multi-purpose loads (solenoids, relays and resistive loads). The so-called Flex products serve in a flexible way the engine requirements with a different number of low-side drivers.

Please refer to page 42 for the product overview.

Downloaded from Arrow.com.

Engine management system ICs

The TLE8888QK is the optimum ‘all-in-one-device’ solution in the field of automotive engine management systems. It contains the necessary output stages to drive the actuators attached to an electronic control unit of 4-cylinder automotive engine management systems, such as solenoids, injectors, relays and stepper motors. A special edge-shaping slew-rate control is implemented in the output stages to ensure electromagnetic conformance optimization. The TLE8888 also includes state-of-the-art communication interfaces, as well as ECU and sensor supply functions.

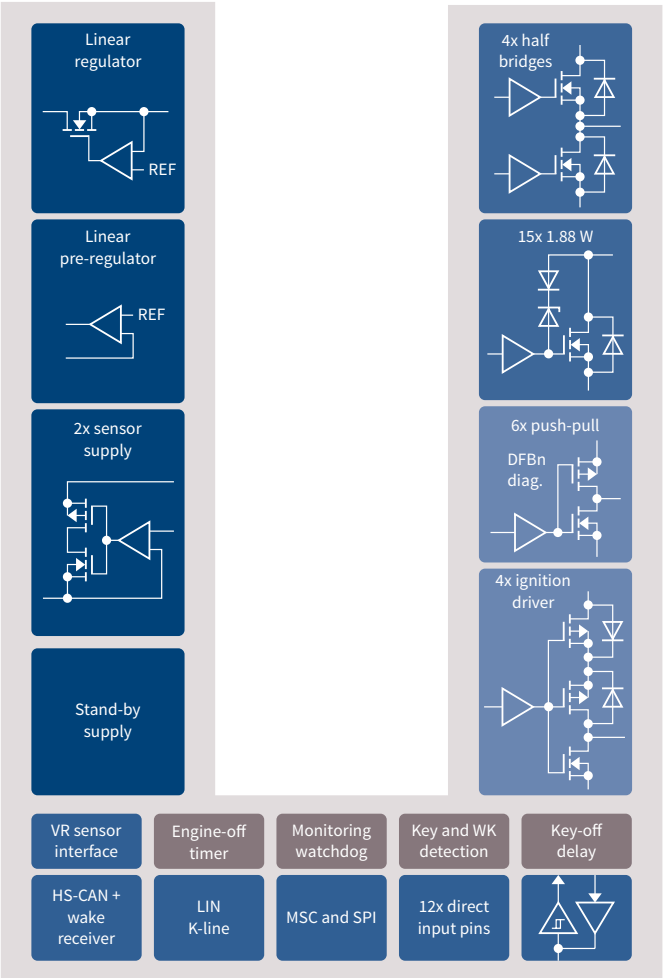

The protection and safety features of the TLE8888 include diagnosis detection (SCG, OL, SCB), overtemperature and current protection, active clamping, under- and overvoltage monitoring, internal and ECU power-on reset, bidirectional disable pin, safety watchdog, enable inputs for injectors and ignition and key-off delay output.

The TLE8888 also includes a variable reluctance sensor interface, a key input detection and delayed key-out, wake-up input detection, engine-off timer, after-run mode and a delay timer, as well as two delayed outputs.

Features

- Supply system with µC, sensor supplies and stand-by regulator
- 29 power outputs for inductive loads, half bridges and ignition
- Communication I/F:
  Direct Inputs, µ second bus, CAN H and LIN I/F
- Protection and safety features: diagnosis,
  active clamping, UV/OV detection, safety watchdog
- Advanced features: VRS I/F, key input detection,
  engine-off timer, after-run mode and delay timer
- Package: LQFP-100

Applications

- 4-cylinder automotive engine management systems
- MPI and GDI systems
- All-in-one chip solution for small engine applications

Product name	Description	Ordering code	Package[1)]
TLE8888QK	Fixed parameter setting for the watchdog	SP000921534	LQFP-100
TLE8888-1QK	Configurable parameter setting for the watchdog	SP001279928	LQFP-100
TLE8888-2QK	Watchdog function is disabled	SP001279926	LQFP-100

1) See packages on page 134 to 136

Downloaded from Arrow.com.

Small engine management ICs

The TLE8080EM and TLE8088EM are engine management system ICs for small engines which include basic functionality for supporting 1-cylinder combustion engines with a focus on the state-of-the-art Electronic Fuel Injection (EFI) technology, but can also be easily deployed in electronic e-carburetor or enhanced Capacitor Discharge Ignition (CDI) systems.

The TLE8080EM contains a 5 V power supply with current of up to 250 mA, a K-line transceiver (ISO 9141) and 5 power stages, a Variable Reluctance Sensor (VRS) interface and features an SPI for control and diagnosis.

The TLE8088EM contains a 5 V power supply, a K-line transceiver and 2 power stages.

Basic protection and diagnosis features are included in both devices: overtemperature, overcurrent protection, undervoltage reset and open-load in Off.

Block diagram TLE8080EM

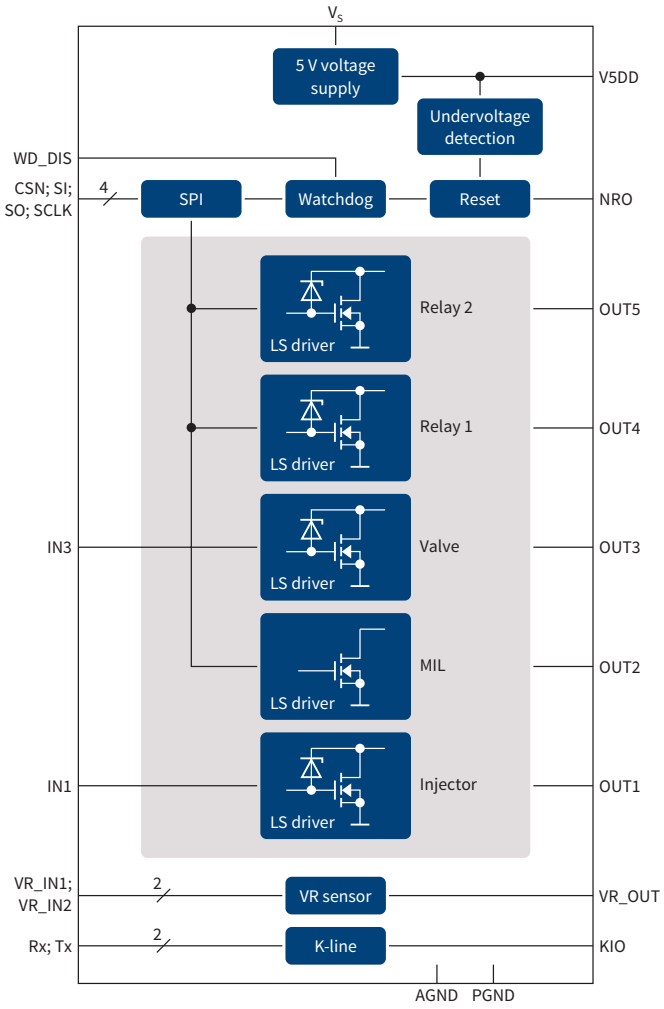

Features of the TLE8080EM

- 5 V supply including watchdog and reset
- 2 low-side drivers for fuel injector and valves
- 1 low-side driver for malfunction indicator lamp
- 2 relay drivers
- K-line transceiver (ISO 9141)
- Variable reluctance sensor interface
- SPI control
- Package: SSOP-24 (150 mil)

Downloaded from Arrow.com.

Block diagram TLE8088EM

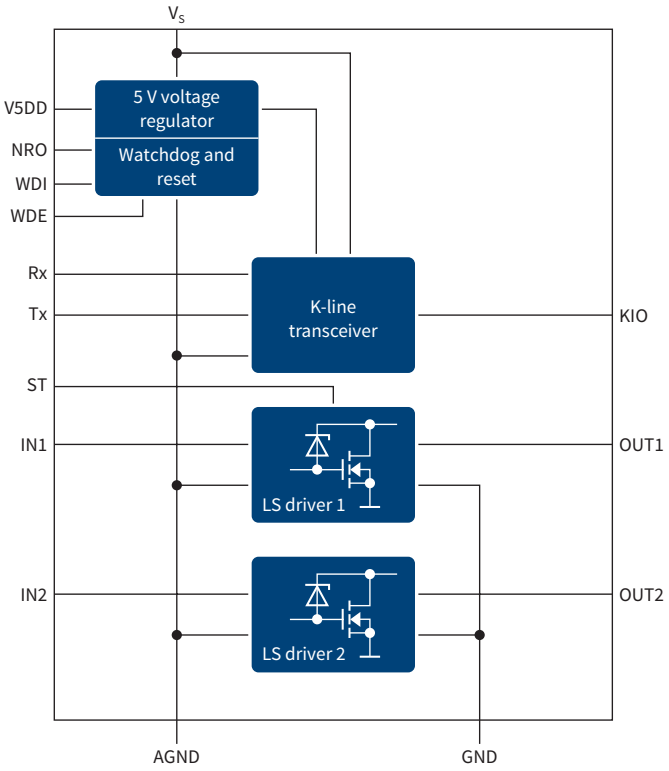

Features of the TLE8088EM

- 5 V supply including watchdog and reset
- 1 low-side driver for fuel injector
- 1 low-side driver for malfunction indicator lamp
- K-line transceiver (ISO 9141)
- Package: SSOP-24 (150 mil)

Applications

4-stroke small combustion engine for:

- Motorcycles, 2- and 3-wheelers and scooters
- Motorized watercrafts, e.g. motor boats or jet-skis
- Snow mobiles, lawn-tractors or -mowers
- Small gasoline power generating sets

Product name	Supply voltage funct. range [V]	5 V supply I_{V5DD} (max) [mA]	V_{5DD} reset threshold (typ) [V]	Power-on reset delay time (typ) [ms]	Injector I_{OUT} max < 2.6 A (nom = 1.3 A)	Valve I_{OUT} max < 2.6 A (nom = 1.3 A)	MIL[2] I_{OUT} max < 3 A (nom = 300 mA)	Relay driver max < 350 mA (nom = 300 mA)	VRS I/F variable reluctance interface	K-Line acc. ISO 9141	SPI I/F diagnosis/ control I/F	Package[1]
TLE8080EM	6–18	250	4.25	15	●	●	●	2x ●	●	●	●	SSOP-24 EP
TLE8080-2EM	6–18	250	3.65	40	●	●	●	2x ●	●	●	●	SSOP-24 EP
TLE8080-3EM	6–18	250	3.65	15	●	●	●	2x ●	●	●	●	SSOP-24 EP
TLE8088EM	6–18	250	4.25	15	●		●			●		SSOP-24 EP

1) See packages on page 134 to 136
2) Malfunction Indicator Lamp (MIL)

Downloaded from Arrow.com.

Restraint system ICs

Infineon, a world leading supplier of airbag ICs with more than 15 years experience, offers several complete solutions, enabling cost efficiency over the entire range from basic up to high-end airbag systems. With a product portfolio ranging from high content integrated system ICs, over smart firing ICs to power supplies, Infineon is well positioned to meet the market's requirements for cost efficiency, high quality and flexibility.

Features

› 16-bit Serial Peripheral Interface (SPI)
› Squib diagnosis via resistance measurement

Airbag firing ICs

Product name	Channels	Warning lamp output driver	Digital output for firing current detection	3.3 V compatible I/O	Buckle switch detection	Number of analog output for signal monitoring	Firing loop enable inputs	Firing current (max) [A]	Programmable deployment firing timer	Buck/ boost	Package[1]
TLE6710	4	2	●		●	1	0	1.75	0	●	MQFP-64 (Power)
TLE7714	4	0				1	4 + SPI	1.75	4		DSO-52
TLE7718	8	0		●		1	4 + SPI	1.75	8		DSO-52
TLE8754	4	0	●	●		SPI	4 + SPI	1.20/1.75	4		VQFN-48
TLE8758	8	0	●	●		SPI	4 + SPI	1.20/1.75	8		VQFN-48

1) See packages on page 134 to 136

AEC Qualified RoHS

www.infineon.com/airbag-system-ic

Downloaded from Arrow.com.

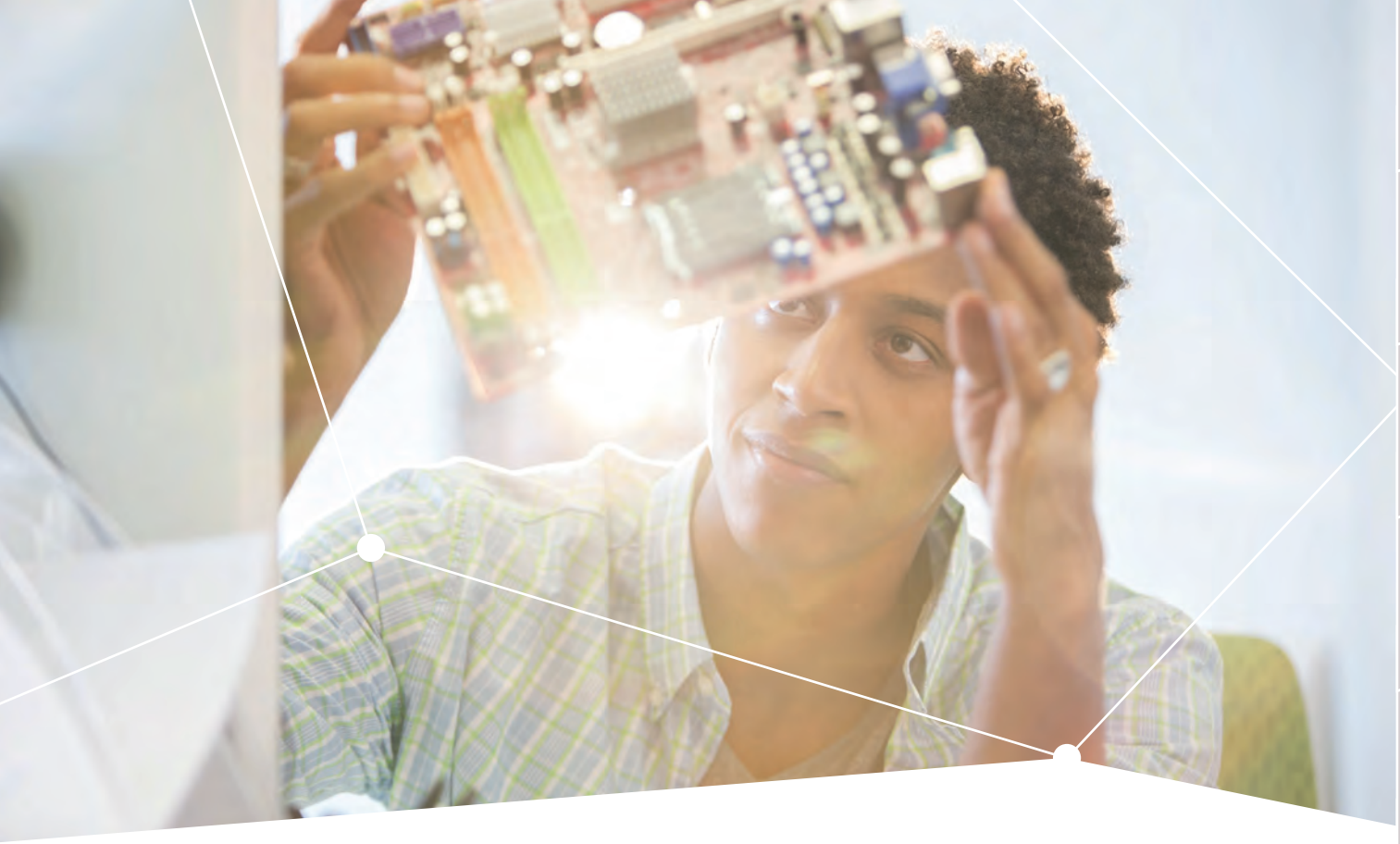

Infineon support for engineers

At Infineon, our mission is to help you transition your idea to a fully functional solution as quickly and effortlessly as possible. This is why we place all the support, tools and information resources you need at your fingertips.

You will find production documentation like data sheets and application notes as well as design files and simulation models or evaluation boards on the **product's webpage**.

With Infineon's **design tool & product finder** you efficiently search the Infineon webpage for specific products and support material like evaluation boards.
www.infineon.com/tools



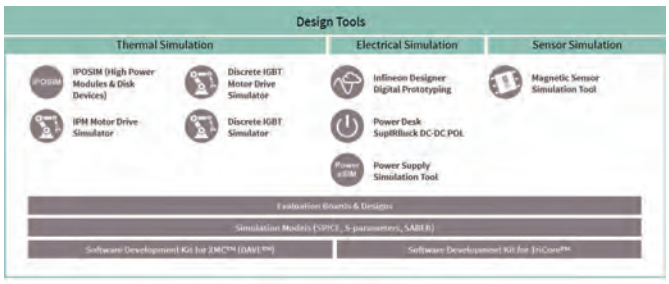

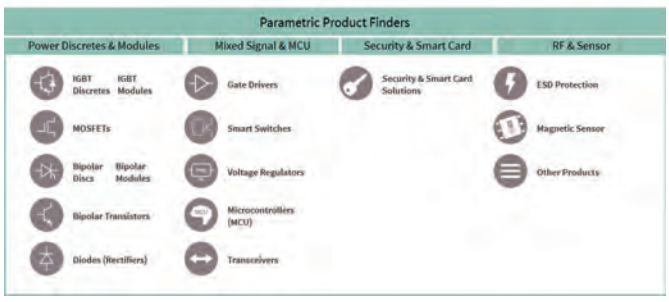

www.infineon.com

Downloaded from Arrow.com.

Infineon support for engineers

Questions? Please contact us!

Support is available in English, German and Mandarin from our talented team of experts.
www.infineon.com/support







Infineon for makers

Explore our portfolio for makers including shields for Arduino and tiny applications kits 2go plus software examples and development tools.
https://www.infineon.com/makers

Cost-efficient evaluation tools provide easy access to a diverse portfolio of sensors, microcontrollers and power ICs!

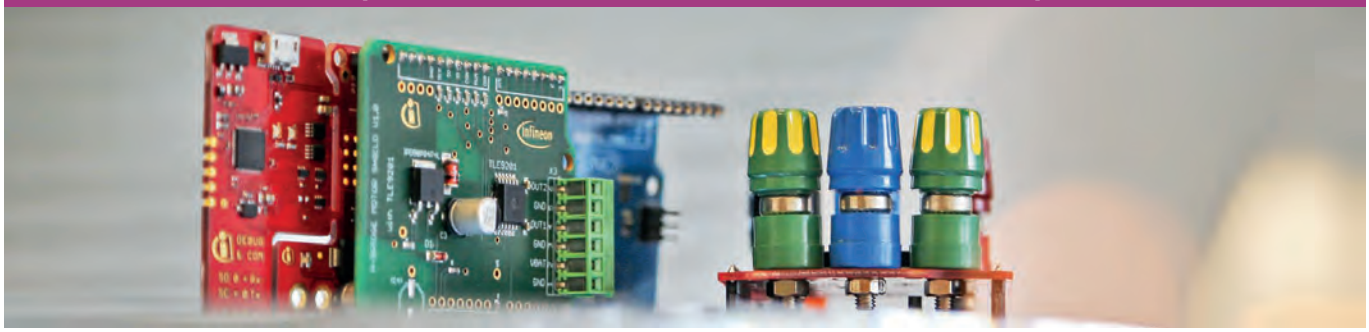

Keep in touch with us

Get ahead of the game by letting the information come to you. We deliver the news you want, with exclusive event invitations, tutorials, cutting-edge applications, tools, and products - handpicked for your industry and location. Every month.

Register for Infineon's newsletter4engineers or follow us on youtube, facebook, Instagram or Twitter.
https://infineoncommunity.com/Newsletter4Engineers

Upcoming events in 2018

To get in touch with Infineon Technologies face to face and experience our company and products, you can meet us at several events during the year. The following link will redirect you to our event calendar.
https://www.infineon.com/cms/en/about-infineon/press/events/

Downloaded from Arrow.com.

Glossary

Type list	Product family	
1EBN1001AE	Isolated gate driver ICs	71
1ED020I12FA2	Isolated gate driver ICs	71
1ED020I12FTA	Isolated gate driver ICs	71
1EDI2001AS	Isolated gate driver ICs	71
1EDI2002AS	Isolated gate driver ICs	71
1EDI2004AS	Isolated gate driver ICs	71
1EDI2010AS	Isolated gate driver ICs	71
1EDI2015AS	Isolated gate driver ICs	71
2ED020I12FA	Isolated gate driver ICs	71
2N7002DW	Small Signal OptiMOS™ N-Channel 60V	25
AIGW40N65F5	IGBT discretes	31
AIGW40N65H5	IGBT discretes	31
AIGW50N65F5	IGBT discretes	31
AIGW50N65H5	IGBT discretes	31
AIKB20N60CT	IGBT discretes	31
AIKD03N60RF	IGBT discretes	31
AIKD04N60R	IGBT discretes	31
AIKD04N60RF	IGBT discretes	31
AIKD06N60R	IGBT discretes	31
AIKD06N60RF	IGBT discretes	31
AIKD10N60R	IGBT discretes	31
AIKD10N60RF	IGBT discretes	31
AIKD15N60R	IGBT discretes	31
AIKD15N60RF	IGBT discretes	31
AIKP20N60CT	IGBT discretes	31
AIKQ100N60CT	IGBT discretes	31
AIKQ120N60CT	IGBT discretes	31
AIKW20N60CT	IGBT discretes	31
AIKW30N60CT	IGBT discretes	31
AIKW40N65DF5	IGBT discretes	31
AIKW40N65DH5	IGBT discretes	31
AIKW50N60CT	IGBT discretes	31
AIKW50N65DF5	IGBT discretes	31
AIKW50N65DH5	IGBT discretes	31
AIKW75N60CT	IGBT discretes	31
AUIPS1025R	HITFET™: low-side protected switches	37
AUIPS1041R	HITFET™: low-side protected switches	37
AUIPS1042G	HITFET™: low-side protected switches	37
AUIPS1051L	HITFET™: low-side protected switches	37
AUIPS1052G	HITFET™: low-side protected switches	37
AUIPS2031R	HITFET™: low-side protected switches	37
AUIPS2041L	HITFET™: low-side protected switches	37
AUIPS2051L	HITFET™: low-side protected switches	37
AUIPS2052G	HITFET™: low-side protected switches	37
AUIPS7091G	Classic PROFET™: protected high-side switches	50
AUIPS7111S	High-current PROFET™: protected high-side switches	51
AUIPS72211R	Classic PROFET™: protected high-side switches	50
AUIPS7221R	Classic PROFET™: protected high-side switches	50
AUIR08152S	Isolated gate driver ICs	71
AUIR2114SS	General purpose gate driver ICs (HVIC)	72
AUIR2214SS	General purpose gate driver ICs (HVIC)	72
AUIR3200S	Gate drivers for power distribution	74
AUIR3240S	Gate drivers for power distribution	74
AUIR3241S	Gate drivers for power distribution	74
AUIR3316S	High-current PROFET™: protected high-side switches	51
AUIR3320S	High-current PROFET™: protected high-side switches	51
AUIR3330S	High-current PROFET™: protected high-side switches	52
AUIR33402S	High-current PROFET™: protected high-side switches	52
AUIRF1010EZS	Automotive N-Channel MOSFETs 60 V (Trench)	14
AUIRF1324	Automotive N-Channel MOSFETs 24 V (Trench)	10
AUIRF1324S	Automotive N-Channel MOSFETs 24 V (Trench)	10
AUIRF1324S-7P	Automotive N-Channel MOSFETs 24 V (Trench)	10
AUIRF1324WL	Automotive N-Channel MOSFETs 24 V (Trench)	10
AUIRF1404	Automotive N-Channel MOSFETs 40 V (Planar)	18
AUIRF1404S	Automotive N-Channel MOSFETs 40 V (Planar)	18

Type list	Product family	
AUIRF1404Z	Automotive N-Channel MOSFETs 40 V (Trench)	12
AUIRF1404ZL	Automotive N-Channel MOSFETs 40 V (Trench)	12
AUIRF1404ZS	Automotive N-Channel MOSFETs 40 V (Trench)	12
AUIRF1405	Automotive N-Channel MOSFETs 55 V (Planar)	18
AUIRF1405ZL	Automotive N-Channel MOSFETs 55 V (Trench)	13
AUIRF1405ZS	Automotive N-Channel MOSFETs 55 V (Trench)	13
AUIRF1405ZS-7P	Automotive N-Channel MOSFETs 55 V (Trench)	13
AUIRF2805	Automotive N-Channel MOSFETs 55 V (Planar)	18
AUIRF2807	Automotive N-Channel MOSFETs 75 V (Planar)	20
AUIRF2903ZL	Automotive N-Channel MOSFETs 30 V (Trench)	10
AUIRF2903ZS	Automotive N-Channel MOSFETs 30 V (Trench)	10
AUIRF3004WL	Automotive N-Channel MOSFETs 40 V (Trench)	11
AUIRF3007	Automotive N-Channel MOSFETs 75 V (Planar)	20
AUIRF3205	Automotive N-Channel MOSFETs 55 V (Planar)	19
AUIRF3205Z	Automotive N-Channel MOSFETs 55 V (Trench)	13
AUIRF3305	Automotive N-Channel MOSFETs 55 V (Planar)	19
AUIRF3315S	Automotive N-Channel MOSFETs 150 V (Planar)	20
AUIRF3415	Automotive N-Channel MOSFETs 150 V (Planar)	20
AUIRF3504	Automotive N-Channel MOSFETs 40 V (Planar)	18
AUIRF3710ZS	Automotive N-Channel MOSFETs 100 V (Trench)	16
AUIRF3805	Automotive N-Channel MOSFETs 55 V (Trench)	13
AUIRF3805L	Automotive N-Channel MOSFETs 55 V (Trench)	13
AUIRF3805L-7P	Automotive N-Channel MOSFETs 55 V (Trench)	13
AUIRF3805S-7P	Automotive N-Channel MOSFETs 55 V (Trench)	13
AUIRF4905	Automotive P-Channel MOSFETs 55 V (Planar)	22
AUIRF4905L	Automotive P-Channel MOSFETs 55 V (Planar)	22
AUIRF4905S	Automotive P-Channel MOSFETs 55 V (Planar)	22
AUIRF5210S	Automotive P-Channel MOSFETs 100 V (Planar)	22
AUIRF540Z	Automotive N-Channel MOSFETs 100 V (Trench)	16
AUIRF540ZS	Automotive N-Channel MOSFETs 100 V (Trench)	16
AUIRF6215	Automotive P-Channel MOSFETs 150 V (Planar)	22
AUIRF6215S	Automotive P-Channel MOSFETs 150 V (Planar)	22
AUIRF6218S	Automotive P-Channel MOSFETs 150 V (Planar)	22
AUIRF7103Q	Automotive N-Channel MOSFETs 50 V (Planar)	18
AUIRF7207Q	Automotive P-Channel MOSFETs 20 V (Planar)	22
AUIRF7303Q	Automotive N-Channel MOSFETs 30 V (Planar)	18
AUIRF7304Q	Automotive P-Channel MOSFETs 20 V (Planar)	22
AUIRF7309Q	Automotive N+P-Channel MOSFETs 30 V (Planar)	23
AUIRF7313Q	Automotive N+P-Channel MOSFETs 30 V (Planar)	18
AUIRF7316Q	Automotive P-Channel MOSFETs 30 V (Planar)	22
AUIRF7319Q	Automotive N+P-Channel MOSFETs 30 V (Planar)	23
AUIRF7341Q	Automotive N-Channel MOSFETs 55 V (Planar)	19
AUIRF7342Q	Automotive P-Channel MOSFETs 55 V (Planar)	22
AUIRF7343Q	Automotive N+P-Channel MOSFETs 55 V (Planar)	23
AUIRF7379Q	Automotive N+P-Channel MOSFETs 30 V (Planar)	23
AUIRF7416Q	Automotive P-Channel MOSFETs 30 V (Planar)	22
AUIRF7478Q	Automotive N-Channel MOSFETs 60 V (Planar)	20
AUIRF7484Q	Automotive N-Channel MOSFETs 40 V (Planar)	18
AUIRF7640S2	Automotive N-Channel MOSFETs 60 V (Trench)	14
AUIRF7647S2	Automotive N-Channel MOSFETs 100 V (Trench)	16
AUIRF7648M2	Automotive N-Channel MOSFETs 60 V (Trench)	13
AUIRF7665S2	Automotive N-Channel MOSFETs 100 V (Trench)	16
AUIRF7669L2	Automotive N-Channel MOSFETs 100 V (Trench)	15
AUIRF7675M2	Automotive N-Channel MOSFETs 150 V (Trench)	17
AUIRF7732S2	Automotive N-Channel MOSFETs 40 V (Trench)	12
AUIRF7734M2	Automotive N-Channel MOSFETs 40V (Trench)	12
AUIRF7736M2	Automotive N-Channel MOSFETs 40 V (Trench)	11
AUIRF7737L2	Automotive N-Channel MOSFETs 40 V (Trench)	11
AUIRF7738L2	Automotive N-Channel MOSFETs 40 V (Trench)	11
AUIRF7739L2	Automotive N-Channel MOSFETs 40 V (Trench)	10
AUIRF7749L2	Automotive N-Channel MOSFETs 60 V (Trench)	13
AUIRF7759L2	Automotive N-Channel MOSFETs 75 V (Trench)	14
AUIRF7769L2	Automotive N-Channel MOSFETs 100 V (Trench)	15
AUIRF7799L2	Automotive N-Channel MOSFETs 250 V (Trench)	17
AUIRF7805Q	Automotive N-Channel MOSFETs 30 V (Planar)	18

Downloaded from Arrow.com.

Glossary

Type list	Product family	
AUIRF8736M2	Automotive N-Channel MOSFETs 40 V (Trench)	11
AUIRF8739L2	Automotive N-Channel MOSFETs 40 V (Trench)	10
AUIRF9540N	Automotive P-Channel MOSFETs 100 V (Planar)	22
AUIRF9952Q	Automotive N+P-Channel MOSFETs 30 V (Planar)	23
AUIRF9Z34N	Automotive P-Channel MOSFETs 55 V (Planar)	22
AUIRFB4410	Automotive N-Channel MOSFETs 100 V (Trench)	15
AUIRFB4610	Automotive N-Channel MOSFETs 100 V (Trench)	15
AUIRFB8405	Automotive N-Channel MOSFETs 40 V (Trench)	11
AUIRFB8407	Automotive N-Channel MOSFETs 40 V (Trench)	11
AUIRFB8409	Automotive N-Channel MOSFETs 40 V (Trench)	11
AUIRFBA1405	Automotive N-Channel MOSFETs 55 V (Planar)	18
AUIRFIZ34N	Automotive N-Channel MOSFETs 55 V (Planar)	19
AUIRFL014N	Automotive N-Channel MOSFETs 55 V (Planar)	19
AUIRFL024N	Automotive N-Channel MOSFETs 55 V (Planar)	19
AUIRFN7107	Automotive N-Channel MOSFETs 75 V (Trench)	14
AUIRFN7110	Automotive N-Channel MOSFETs 100V (Trench)	15
AUIRFN8459	Automotive N-Channel MOSFETs 40 V (Trench)	12
AUIRFP064N	Automotive N-Channel MOSFETs 55 V (Planar)	19
AUIRFP1405	Automotive N-Channel MOSFETs 55 V (Planar)	18
AUIRFP2602	Automotive N-Channel MOSFETs 24 V (Trench)	10
AUIRFP2907	Automotive N-Channel MOSFETs 75 V (Planar)	20
AUIRFP4004	Automotive N-Channel MOSFETs 40 V (Trench)	11
AUIRFP4110	Automotive N-Channel MOSFETs 100 V (Trench)	15
AUIRFP4409	Automotive N-Channel MOSFETs 300 V (Trench)	17
AUIRFP4568	Automotive N-Channel MOSFETs 150 V (Trench)	17
AUIRFR2905Z	Automotive N-Channel MOSFETs 55 V (Trench)	13
AUIRFR3504	Automotive N-Channel MOSFETs 40 V (Planar)	18
AUIRFR3806	Automotive N-Channel MOSFETs 60 V (Trench)	14
AUIRFR4105Z	Automotive N-Channel MOSFETs 55 V (Trench)	13
AUIRFR4292	Automotive N-Channel MOSFETs 250 V (Trench)	17
AUIRFR4615	Automotive N-Channel MOSFETs 150 V (Trench)	17
AUIRFR4620	Automotive N-Channel MOSFETs 200 V (Trench)	17
AUIRFR48Z	Automotive N-Channel MOSFETs 55 V (Trench)	13
AUIRFR5305	Automotive P-Channel MOSFETs 55 V (Planar)	22
AUIRFR540Z	Automotive N-Channel MOSFETs 100 V (Trench)	16
AUIRFR5410	Automotive P-Channel MOSFETs 100 V (Planar)	22
AUIRFR5505	Automotive P-Channel MOSFETs 55 V (Planar)	22
AUIRFR6215	Automotive P-Channel MOSFETs 150 V (Planar)	22
AUIRFR8401	Automotive N-Channel MOSFETs 40 V (Trench)	12
AUIRFR8403	Automotive N-Channel MOSFETs 40 V (Trench)	11
AUIRFR8405	Automotive N-Channel MOSFETs 40 V (Trench)	11
AUIRFR9024N	Automotive P-Channel MOSFETs 55 V (Planar)	22
AUIRFS3107	Automotive N-Channel MOSFETs 75 V (Trench)	14
AUIRFS3306	Automotive N-Channel MOSFETs 60 V (Trench)	13
AUIRFS4115	Automotive N-Channel MOSFETs 150 V (Trench)	17
AUIRFS4115-7P	Automotive N-Channel MOSFETs 150 V (Trench)	17
AUIRFS4310	Automotive N-Channel MOSFETs 100 V (Trench)	15
AUIRFS4310Z	Automotive N-Channel MOSFETs 100 V (Trench)	15
AUIRFS6535	Automotive N-Channel MOSFETs 300 V (Trench)	17
AUIRFS8403	Automotive N-Channel MOSFETs 40 V (Trench)	12
AUIRFS8407	Automotive N-Channel MOSFETs 40 V (Trench)	11
AUIRFS8407-7P	Automotive N-Channel MOSFETs 40 V (Trench)	11
AUIRFS8408-7P	Automotive N-Channel MOSFETs 40 V (Trench)	10
AUIRFS8409	Automotive N-Channel MOSFETs 40 V (Trench)	11
AUIRFS8409-7P	Automotive N-Channel MOSFETs 40 V (Trench)	10
AUIRFSA8409-7P	Automotive N-Channel MOSFETs 40 V (Trench)	10
AUIRFSL6535	Automotive N-Channel MOSFETs 300 V (Trench)	17
AUIRFSL8403	Automotive N-Channel MOSFETs 40 V (Trench)	12
AUIRFSL8405	Automotive N-Channel MOSFETs 40 V (Trench)	11
AUIRFSL8407	Automotive N-Channel MOSFETs 40 V (Trench)	11
AUIRFSL8409	Automotive N-Channel MOSFETs 40 V (Trench)	11
AUIRFU120Z	Automotive N-Channel MOSFETs 100 V (Trench)	16
AUIRFU8401	Automotive N-Channel MOSFETs 40 V (Trench)	12
AUIRFU8403	Automotive N-Channel MOSFETs 40 V (Trench)	12
AUIRFU8405	Automotive N-Channel MOSFETs 40 V (Trench)	11
AUIRFZ24NS	Automotive N-Channel MOSFETs 55 V (Planar)	19

Type list	Product family	
AUIRFZ34N	Automotive N-Channel MOSFETs 55 V (Planar)	19
AUIRFZ44N	Automotive N-Channel MOSFETs 55 V (Planar)	19
AUIRFZ46NL	Automotive N-Channel MOSFETs 55 V (Planar)	19
AUIRFZ48N	Automotive N-Channel MOSFETs 55 V (Planar)	19
AUIRG4BC30S-S	IGBT discretes	31
AUIRG4BC30U-S	IGBT discretes	31
AUIRG4PC40S-E	IGBT discretes	31
AUIRG4PH50S	IGBT discretes	31
AUIRGDC0250	IGBT discretes	31
AUIRGF65G40D0	IGBT discretes	31
AUIRGP35B60PD-E	IGBT discretes	31
AUIRGP4062D-E	IGBT discretes	31
AUIRGP4063D-E	IGBT discretes	31
AUIRGP50B60PD1E	IGBT discretes	31
AUIRGPS4070D0	IGBT discretes	31
AUIRGS30B60K	IGBT discretes	31
AUIRGS4062D1	IGBT discretes	31
AUIRGSL30B60K	IGBT discretes	31
AUIRGSL4062D1	IGBT discretes	31
AUIRL1404S	Automotive N-Channel MOSFETs 40 V (Planar)	18
AUIRL1404Z	Automotive N-Channel MOSFETs 40 V (Trench)	12
AUIRL1404ZL	Automotive N-Channel MOSFETs 40 V (Trench)	12
AUIRL1404ZS	Automotive N-Channel MOSFETs 40 V (Trench)	12
AUIRL2203N	Automotive N-Channel MOSFETs 30 V (Planar)	18
AUIRL7732S2	Automotive N-Channel MOSFETs 40 V (Trench)	12
AUIRL7736M2	Automotive N-Channel MOSFETs 40 V (Trench)	11
AUIRL7766M2	Automotive N-Channel MOSFETs 100 V (Trench)	15
AUIRLL014N	Automotive N-Channel MOSFETs 55 V (Planar)	19
AUIRLL024N	Automotive N-Channel MOSFETs 55 V (Planar)	19
AUIRLL024Z	Automotive N-Channel MOSFETs 55 V (Trench)	13
AUIRLL2705	Automotive N-Channel MOSFETs 55 V (Planar)	19
AUIRLR014N	Automotive N-Channel MOSFETs 55 V (Planar)	19
AUIRLR024N	Automotive N-Channel MOSFETs 55 V (Planar)	19
AUIRLR120N	Automotive N-Channel MOSFETs 100 V (Planar)	20
AUIRLR2905	Automotive N-Channel MOSFETs 55 V (Planar)	19
AUIRLR3410	Automotive N-Channel MOSFETs 100 V (Planar)	20
AUIRLS3034-7P	Automotive N-Channel MOSFETs 40 V (Trench)	11
AUIRLS3036	Automotive N-Channel MOSFETs 60 V (Trench)	13
AUIRLS3036-7P	Automotive N-Channel MOSFETs 60 V (Trench)	13
AUIRLS4030	Automotive N-Channel MOSFETs 100 V (Trench)	15
AUIRLS4030-7P	Automotive N-Channel MOSFETs 100 V (Trench)	15
AUIRLS8409-7P	Automotive N-Channel MOSFETs 40 V (Trench)	10
AUIRLZ24NS	Automotive N-Channel MOSFETs 55 V (Planar)	19
AUIRS1170S	General purpose gate driver ICs (HVIC)	72
AUIRS2012	Gate drivers for power distribution	74
AUIRS20302	3-phase bridge driver IC (gate driver ICs for external MOSFETs)	70
AUIRS2113S	General purpose gate driver ICs (HVIC)	72
AUIRS2117S	General purpose gate driver ICs (HVIC)	72
AUIRS2118S	General purpose gate driver ICs (HVIC)	72
AUIRS2123S	General purpose gate driver ICs (HVIC)	72
AUIRS2124S	General purpose gate driver ICs (HVIC)	72
AUIRS21271S	General purpose gate driver ICs (HVIC)	72
AUIRS2127S	General purpose gate driver ICs (HVIC)	72
AUIRS21811S	General purpose gate driver ICs (HVIC)	72
AUIRS21814S	General purpose gate driver ICs (HVIC)	72
AUIRS2181S	General purpose gate driver ICs (HVIC)	72
AUIRS2191S	General purpose gate driver ICs (HVIC)	72
AUIRS2301S	General purpose gate driver ICs (HVIC)	72
AUIRS2336S	General purpose gate driver ICs (HVIC)	72
BCR320U	LITIX™ Linear Automotive LED driver IC	56
BCR321U	LITIX™ Linear Automotive LED driver IC	56
BCR401U	LITIX™ Linear Automotive LED driver IC	56
BCR401W	LITIX™ Linear Automotive LED driver IC	56
BCR402U	LITIX™ Linear Automotive LED driver IC	56
BCR402W	LITIX™ Linear Automotive LED driver IC	56
BCR405U	LITIX™ Linear Automotive LED driver IC	56

Downloaded from Arrow.com.

Type list	Product family	
BCR420U	LITIX™ Linear Automotive LED driver IC	56
BCR421U	LITIX™ Linear Automotive LED driver IC	56
BRS41KOS-ME-N	Classic PROFET™: protected high-side switches	49
BSD214SN	Small Signal N-Channel MOSFETs	25
BSD223P	Small Signal OptiMOS™2 P-Channel -20 V MOSFETs	26
BSD235C/n-ch	Small Signal OPTIMOS™2 N-Channel 20V Complementary MOSFETs	27
BSD235C/p-ch	Small Signal OPTIMOS™2 P-Channel -20V Complementary MOSFETs	27
BSD235N	Small Signal OptiMOS™2 N-Channel 20 V MOSFETs	25
BSD314SPE	Small Signal OptiMOS™3 P-Channel -30 V + integrated ESD diode MOSFETs	26
BSD316SN	Small Signal OptiMOS™2 N-Channel 30 V MOSFETs	25
BSD816SN	Small Signal OptiMOS™2 N-Channel 20 V MOSFETs	25
BSD840N	Small Signal OptiMOS™2 N-Channel 20 V MOSFETs	25
BSL202SN	Small Signal OptiMOS™2 N-Channel 20 V MOSFETs	25
BSL205N	Small Signal OptiMOS™2 N-Channel 20 V MOSFETs	25
BSL207N	Small Signal OptiMOS™2 N-Channel 20 V MOSFETs	25
BSL207SP	Small Signal OptiMOS™2 N-Channel 20 V MOSFETs	26
BSL211SP	Small Signal OptiMOS™2 N-Channel 20 V MOSFETs	26
BSL214N	Small Signal OptiMOS™2 N-Channel 20 V MOSFETs	25
BSL215C/n-ch	Small Signal OPTIMOS™2 N-Channel 20 V Complementary MOSFETs	27
BSL215C/p-ch	Small Signal OPTIMOS™2 N-Channel 20 V Complementary MOSFETs	27
BSL215P	Small Signal OptiMOS™2 P-Channel -20 V MOSFETs	26
BSL296SN	Small Signal SIPMOS™ N-Channel 100 V	25
BSL302SN	Small Signal OptiMOS™2 N-Channel 30 V MOSFETs	25
BSL303SPE	Small Signal OptiMOS™ P-Channel -30 V + integrated ESD diode	26
BSL305SPE	Small Signal OptiMOS™ P-Channel -30 V + integrated ESD diode	26
BSL306N	Small Signal OptiMOS™2 N-Channel 30 V MOSFETs	25
BSL307SP	Small Signal OptiMOS™2 P-Channel -30 V MOSFETs	26
BSL308C/n-ch	Small Signal OPTIMOS™2 N-Channel 30 V Complementary MOSFETs	27
BSL308C/p-ch	Small Signal OPTIMOS™3 P-Channel -30 V Complementary MOSFETs	27
BSL308PE	Small Signal OptiMOS™3 P-Channel -30 V + integrated ESD diode	26
BSL314PE	Small Signal OptiMOS™3 P-Channel -30 V + integrated ESD diode	26
BSL316C/n-ch	Small Signal OPTIMOS™2 N-Channel 30 V Complementary MOSFETs	27
BSL316C/p-ch	Small Signal OPTIMOS™2 P-Channel -30 V Complementary MOSFETs	27
BSL372SN	Small Signal SIPMOS™ N-Channel 100 V	25
BSL373SN	Small Signal SIPMOS™ N-Channel 100 V	25
BSL606SN	Small Signal OptiMOS™3 N-Channel 60 V MOSFETs	25
BSL802SN	Small Signal OptiMOS™2 N-Channel 20 V MOSFETs	25
BSL806N	Small Signal OptiMOS™2 N-Channel 20 V MOSFETs	25
BSP125	Small Signal SIPMOS™ N-Channel 600 V	26
BSP129	Small Signal SIPMOS™ 240 V Depletion MOSFETs	27
BSP135	Small Signal SIPMOS™ 600 V Depletion MOSFETs	27
BSP149	Small Signal SIPMOS™ 200 V Depletion MOSFETs	27
BSP170P	Small Signal SIPMOS™ P-Channel -60 V	26
BSP171P	Small Signal SIPMOS™ P-Channel -60 V	26
BSP179	Small Signal MOSFETs	27
BSP295	Small Signal SIPMOS™ N-Channel 60 V	25
BSP296N	Small Signal SIPMOS™ N-Channel 100 V	25
BSP297	Small Signal SIPMOS™ N-Channel 200 V	25
BSP298	Small Signal SIPMOS™ N-Channel 400 V	25
BSP299	Small Signal SIPMOS™ N-Channel 500 V	25
BSP300	Small Signal SIPMOS™ N-Channel 800 V	26
BSP315P	Small Signal SIPMOS™ P-Channel -60 V	26
BSP316P	Small Signal SIPMOS™ P-Channel -100 V	26
BSP317P	Small Signal SIPMOS™ P-Channel -250 V	27
BSP318S	Small Signal SIPMOS™ N-Channel 60 V	25
BSP320S	Small Signal SIPMOS™ N-Channel 60 V	25
BSP321P	Small Signal SIPMOS™ P-Channel -100 V	26
BSP322P	Small Signal SIPMOS™ P-Channel -100 V	26
BSP324	Small Signal SIPMOS™ N-Channel 400 V	25
BSP372N	Small Signal SIPMOS™ N-Channel 100V	25
BSP373N	Small Signal SIPMOS™ N-Channel 100 V	25
BSP452	Classic PROFET™: protected high-side switches	49
BSP603S2L	Automotive N-Channel MOSFETs OptiMOS™ 55V (Planar)	19
BSP613P	Small Signal SIPMOS™ P-Channel -60 V	26
BSP742R	Classic PROFET™: protected high-side switches	49

Type list	Product family	
BSP742RI	Classic PROFET™: protected high-side switches	49
BSP742T	Classic PROFET™: protected high-side switches	49
BSP752R	Classic PROFET™: protected high-side switches	49
BSP752T	Classic PROFET™: protected high-side switches	49
BSP75N	HITFET™: low-side protected switches	37
BSP762T	Classic PROFET™: protected high-side switches	49
BSP772T	Classic PROFET™: protected high-side switches	49
BSP88	Small Signal SIPMOS™ N-Channel 240 V	25
BSP89	Small Signal SIPMOS™ N-Channel 240 V	25
BSP92P	Small Signal SIPMOS™ P-Channel -250 V	27
BSR202N	Small Signal OptiMOS™2 N-Channel 20 V MOSFETs	25
BSR302N	Small Signal OptiMOS™2 N-Channel 30 V MOSFETs	25
BSR315P	Small Signal SIPMOS™ P-Channel -60 V	26
BSR316P	Small Signal SIPMOS™ P-Channel -100 V	26
BSR606N	Small Signal OptiMOS™3 N-Channel 60 V MOSFETs	25
BSR802N	Small Signal OptiMOS™2 N-Channel 20 V MOSFETs	25
BSR92P	Small Signal SIPMOS™ P-Channel -250 V	27
BSS119N	Small Signal SIPMOS™ N-Channel 100 V	25
BSS123N	Small Signal SIPMOS™ N-Channel 100 V	25
BSS126	Small Signal SIPMOS™ 600 V Depletion MOSFETs	27
BSS127	Small Signal SIPMOS™ N-Channel 600 V	26
BSS131	Small Signal SIPMOS™ N-Channel 240V	25
BSS138N	Small Signal SIPMOS™ N-Channel 60 V	25
BSS138W	Small Signal SIPMOS™ N-Channel 60 V	25
BSS139	Small Signal SIPMOS™ 250 V Depletion MOSFETs	27
BSS159N	Small Signal SIPMOS™ 60 V Depletion MOSFETs	27
BSS169	Small Signal SIPMOS™ 100 V Depletion MOSFETs	27
BSS192P	Small Signal SIPMOS™ P-Channel -250 V	27
BSS205N	Small Signal OptiMOS™2 N-Channel 20 V MOSFETs	25
BSS209PW	Small Signal OptiMOS™2 P-Channel -20 V MOSFETs	26
BSS214N	Small Signal OptiMOS™2 N-Channel 20 V MOSFETs	25
BSS214NW	Small Signal OptiMOS™2 N-Channel 20 V MOSFETs	25
BSS215P	Small Signal OptiMOS™2 P-Channel -20 V MOSFETs	26
BSS223PW	Small Signal OptiMOS™2 P-Channel -20 V MOSFETs	26
BSS225	Small Signal SIPMOS™ N-Channel 600 V	26
BSS306N	Small Signal N-Channel MOSFETs	25
BSS308PE	Small Signal OptiMOS™3 P-Channel -30 V + integrated ESD diode MOSFETs	26
BSS314PE	Small Signal OptiMOS™3 P-Channel -30 V + integrated ESD diode MOSFETs	26
BSS315P	Small Signal OptiMOS™2 P-Channel -30 V MOSFETs	26
BSS316N	Small Signal OptiMOS™2 N-Channel 30 V MOSFETs	25
BSS606N	Small Signal OptiMOS™3 N-Channel 60 V MOSFETs	25
BSS670S2L	Small Signal OptiMOS™ N-Channel 55V MOSFETs	25
BSS7728N	Small Signal SIPMOS™ N-Channel 60 V	25
BSS806N	Small Signal OptiMOS™2 N-Channel 20V MOSFETs	25
BSS816NW	Small Signal OptiMOS™2 N-Channel 20 V MOSFETs	25
BSS83P	Small Signal SIPMOS™ P-Channel -60 V	26
BSS84P	Small Signal SIPMOS™ P-Channel -60 V	26
BSS84PW	Small Signal SIPMOS™ P-Channel -60V	26
BSS87	Small Signal SIPMOS™ N-Channel 240 V	25
BSV236SP	Small Signal OptiMOS™ P-Channel -20 V MOSFETs	26
BSZ15DC02KD/n-ch	Small Signal OptiMOS™2 N-Channel Complementary MOSFETs	27
BSZ15DC02KD/p-ch	Small Signal OptiMOS™2 P-Channel Complementary MOSFETs	27
BTF3035EJ	HITFET™+: low-side protected switches	37
BTF3050EJ	HITFET™+: low-side protected switches	37
BTF3050TE	HITFET™+: low-side protected switches	37
BTF3080EJ	HITFET™+: low-side protected switches	37
BTF3125EJ	HITFET™+: low-side protected switches	37
BTF50060-1TEA	High-current PROFET™: protected high-side switches	52
BTF6070-2EKV	PROFET™+ 24V: protected high-side switches	51
BTM7700G	Trilith IC (Integrated High-current Motor Drivers)	67
BTM7710G	Trilith IC (Integrated High-current Motor Drivers)	67
BTM7740G	Trilith IC (Integrated High-current Motor Drivers)	67
BTM7741G	Trilith IC (Integrated High-current Motor Drivers)	67
BTM7750G	Trilith IC (Integrated High-current Motor Drivers)	67
BTM7752G	Trilith IC (Integrated High-current Motor Drivers)	67

Downloaded from Arrow.com.

Glossary

Type list	Product family	
BTN8962TA	NovalithIC™ (Integrated High-current Motor Drivers)	68
BTN8982TA	NovalithIC™ (Integrated High-current Motor Drivers)	68
BTS117TC	HITFET™: low-side protected switches	37
BTS133TC	HITFET™: low-side protected switches	37
BTS141TC	HITFET™: low-side protected switches	37
BTS244Z	TEMPFET™: Temperature Protected Switches	34
BTS247Z	TEMPFET™: Temperature Protected Switches	34
BTS282Z	TEMPFET™: Temperature Protected Switches	34
BTS3018TC	HITFET™: low-side protected switches	37
BTS3028SDL	HITFET™: low-side protected switches	37
BTS3028SDR	HITFET™: low-side protected switches	37
BTS3035EJ	HITFET™+: low-side protected switches	37
BTS3035TF	HITFET™+: low-side protected switches	37
BTS3046SDL	HITFET™: low-side protected switches	37
BTS3046SDR	HITFET™: low-side protected switches	37
BTS3050EJ	HITFET™+: low-side protected switches	37
BTS3050TF	HITFET™+: low-side protected switches	37
BTS3060TF	HITFET™+: low-side protected switches	37
BTS307	Classic PROFET™: protected high-side switches	49
BTS3080EJ	HITFET™+: low-side protected switches	37
BTS3080TF	HITFET™: low-side protected switches	37
BTS3104SDL	HITFET™: low-side protected switches	37
BTS3104SDR	HITFET™: low-side protected switches	37
BTS3125EJ	HITFET™+: low-side protected switches	37
BTS3125TF	HITFET™+: low-side protected switches	37
BTS3160D	HITFET™: low-side protected switches	37
BTS3205G	HITFET™: low-side protected switches	37
BTS3205N	HITFET™: low-side protected switches	37
BTS3207N	HITFET™: low-side protected switches	37
BTS3256D	HITFET™: low-side protected switches	37
BTS3405G	HITFET™: low-side protected switches	37
BTS3408G	HITFET™: low-side protected switches	37
BTS3410G	HITFET™: low-side protected switches	37
BTS3800SL	HITFET™: low-side protected switches	37
BTS409L1	Classic PROFET™: protected high-side switches	49
BTS40k2-1EJC	PROFET™: smart high-side switches	51
BTS410-E2	Classic PROFET™: protected high-side switches	49
BTS410-F2	Classic PROFET™: protected high-side switches	49
BTS4130QGA	Classic PROFET™: protected high-side switches	50
BTS4140N	Classic PROFET™: protected high-side switches	49
BTS4141N	Classic PROFET™: protected high-side switches	49
BTS4142N	Classic PROFET™: protected high-side switches	49
BTS4160DGA	Classic PROFET™: protected high-side switches	49
BTS4175SGA	Classic PROFET™: protected high-side switches	49
BTS426L1	Classic PROFET™: protected high-side switches	50
BTS428L2	Classic PROFET™: protected high-side switches	50
BTS4300SGA	Classic PROFET™: protected high-side switches	49
BTS432E2	High-current PROFET™: protected high-side switches	50
BTS432E2 E3062A	High-current PROFET™: protected high-side switches	50
BTS436L2	Classic PROFET™: protected high-side switches	50
BTS441RG	Classic PROFET™: protected high-side switches	50
BTS441TG	Classic PROFET™: protected high-side switches	49
BTS442E2	High-current PROFET™: protected high-side switches	50
BTS442E2 E3062A	High-current PROFET™: protected high-side switches	50
BTS443P	High-current PROFET™: protected high-side switches	50
BTS452R	Classic PROFET™: protected high-side switches	49
BTS452T	Classic PROFET™: protected high-side switches	49
BTS462T	Classic PROFET™: protected high-side switches	49
BTS4880R	Classic PROFET™: protected high-side switches	49
BTS50010-1TAD	Power PROFET™: protected high-side switches	52
BTS50015-1TAD	Power PROFET™: protected high-side switches	52
BTS50020-1TAD	Power PROFET™: protected high-side switches	52
BTS50025-1TAD	Power PROFET™: protected high-side switches	52
BTS50040-2SFA	High-current PROFET™: protected high-side switches	52
BTS50050-1EGA	High-current PROFET™: protected high-side switches	52
BTS50055-1TMA	High-current PROFET™: protected high-side switches	51

Type list	Product family	
BTS50055-1TMB	High-current PROFET™: protected high-side switches	51
BTS50055-1TMC	High-current PROFET™: protected high-side switches	51
BTS50060-1EGA	High-current PROFET™: protected high-side switches	52
BTS50060-1TEA	High-current PROFET™: protected high-side switches	52
BTS50080-1EGA	High-current PROFET™: protected high-side switches	52
BTS50080-1TEA	High-current PROFET™: protected high-side switches	51
BTS50080-1TEB	High-current PROFET™: protected high-side switches	51
BTS50080-1TMA	High-current PROFET™: protected high-side switches	51
BTS50080-1TMB	High-current PROFET™: protected high-side switches	51
BTS50080-1TMC	High-current PROFET™: protected high-side switches	51
BTS5008-1EKB	PROFET™+ 12V: protected high-side switches	52
BTS50085-1TMA	High-current PROFET™: protected high-side switches	50
BTS50085-1TMB	High-current PROFET™: protected high-side switches	50
BTS5010-1EKB	PROFET™+ 12V: protected high-side switches	52
BTS5012-1EKB	PROFET™+ 12V: protected high-side switches	52
BTS5012SDA	High-current PROFET™: protected high-side switches	50
BTS5014SDA	High-current PROFET™: protected high-side switches	50
BTS5016-1EKB	PROFET™+ 12V: protected high-side switches	52
BTS5016-2EKA	PROFET™+ 12V: protected high-side switches	52
BTS5016SDA	High-current PROFET™: protected high-side switches	50
BTS5020-1EKA	PROFET™+ 12V: protected high-side switches	52
BTS5020-2EKA	PROFET™+ 12V: protected high-side switches	52
BTS5030-1EJA	PROFET™+ 12V: protected high-side switches	52
BTS5030-2EKA	PROFET™+ 12V: protected high-side switches	52
BTS5045-1EJA	PROFET™+ 12V: protected high-side switches	51
BTS5045-2EKA	PROFET™+ 12V: protected high-side switches	51
BTS5090-1EJA	PROFET™+ 12V: protected high-side switches	51
BTS5090-2EKA	PROFET™+ 12V: protected high-side switches	51
BTS5120-2EKA	PROFET™+ 12V: protected high-side switches	51
BTS5180-2EKA	PROFET™+ 12V: protected high-side switches	51
BTS5200-1EJA	PROFET™+ 12V: protected high-side switches	51
BTS5200-4EKA	PROFET™+ 12V: protected high-side switches	51
BTS5210G	Classic PROFET™: protected high-side switches	50
BTS5210L	Classic PROFET™: protected high-side switches	50
BTS5215L	Classic PROFET™: protected high-side switches	50
BTS6110-1SJA	PROFET™ Motorcycle: protected high-side switches	51
BTS611L1	Classic PROFET™: protected high-side switches	49
BTS612N1	Classic PROFET™: protected high-side switches	49
BTS6133D	High-current PROFET™: protected high-side switches	50
BTS6142D	High-current PROFET™: protected high-side switches	50
BTS6143D	High-current PROFET™: protected high-side switches	50
BTS6163D	High-current PROFET™: protected high-side switches	50
BTS621L1	Classic PROFET™: protected high-side switches	50
BTS640S2G	Classic PROFET™: protected high-side switches	52
BTS7004-1EPP	High-current PROFET™: protected high-side switches	52
BTS7006-1EPP	High-current PROFET™: protected high-side switches	52
BTS7008-1EPP	High-current PROFET™: protected high-side switches	52
BTS7008-2EPA	PROFET™+ 2: protected high-side switches	52
BTS7008-2EPP	High-current PROFET™: protected high-side switches	52
BTS7010-2EPA	PROFET™+ 2: protected high-side switches	52
BTS7012-2EPA	PROFET™+ 2: protected high-side switches	52
BTS7020-2EPA	PROFET™+ 2: protected high-side switches	52
BTS7030-2EPA	PROFET™+ 2: protected high-side switches	52
BTS7040-2EPA	PROFET™+ 2: protected high-side switches	51
BTS7080-2EPA	PROFET™+ 2: protected high-side switches	51
BTS71033-6ESA	SPOC™+ 2: high-side switches	54
BTS71040-4ESA	SPOC™+ 2: high-side switches	54
BTS71040-4ESE	SPOC™+ 2: high-side switches	54
BTS711L1	Classic PROFET™: protected high-side switches	49
BTS71220-4ESA	SPOC™+ 2: high-side switches	54
BTS71220-4ESE	SPOC™+ 2: high-side switches	54
BTS712N1	Classic PROFET™: protected high-side switches	49
BTS716G	Classic PROFET™: protected high-side switches	50
BTS716GB	Classic PROFET™: protected high-side switches	50
BTS721L1	Classic PROFET™: protected high-side switches	50
BTS72220-4ESA	SPOC™+ 2: high-side switches	54

Downloaded from Arrow.com.

Type list	Product family	
BTS72220-4ESE	SPOC™+ 2: high-side switches	54
BTS723GW	Classic PROFET™: protected high-side switches	50
BTS724G	Classic PROFET™: protected high-side switches	50
BTS730	Classic PROFET™: protected high-side switches	49
BTS740S2	Classic PROFET™: protected high-side switches	52
BTT6010-1EKA	PROFET™+ 24V: protected high-side switches	52
BTT6010-1EKB	PROFET™+ 24V: protected high-side switches	52
BTT6020-1EKA	PROFET™+ 24V: protected high-side switches	52
BTT6030-1EKA	PROFET™+ 24V: protected high-side switches	52
BTT6030-2EKA	PROFET™+ 24V: protected high-side switches	52
BTT6030-2EKB	PROFET™+ 24V: protected high-side switches	52
BTT6050-1EKA	PROFET™+ 24V: protected high-side switches	51
BTT6050-2EKA	PROFET™+ 24V: protected high-side switches	51
BTT6100-2EKA	PROFET™+ 24V: protected high-side switches	51
BTT6200-1EJA	PROFET™+ 24V: protected high-side switches	51
BTT6200-4EMA	PROFET™+ 24V: protected high-side switches	51
F4-50R07W1H3_B11A	Easy modules IGBT	33
F4-75R07W1H3_B11A	Easy modules IGBT	33
FF400R07A01E3_S6	HybridPACK IGBT module	33
FS200R07A02E3_S6	HybridPACK IGBT module	33
FS200R07A5E3_S6	HybridPACK IGBT module	32
FS200R12A1T4_H5	HybridPACK IGBT module	32
FS215R04A1E3D	HybridPACK IGBT module	32
FS400R07A1E3_H5	HybridPACK IGBT module	32
FS400R07A1E3_S7	HybridPACK IGBT module	32
FS400R07A3E3	HybridPACK IGBT module	32
FS400R07A3E3_H6	HybridPACK IGBT module	32
FS400R12A2T4	HybridPACK IGBT module	32
FS50R07W1E3_B11A	Easy modules IGBT	33
FS600R07A2E3_B31	HybridPACK IGBT module	32
FS600R07A2E3_B32	HybridPACK IGBT module	32
FS660R08A6P2FB	HybridPACK IGBT module	33
FS75R07W2E3_B11A	Easy modules IGBT	33
FS800R07A2E3_B31	HybridPACK IGBT module	32
FS800R07A2E3_B32	HybridPACK IGBT module	32
FS820R08A6P2	HybridPACK IGBT module	33
FS820R08A6P2B	HybridPACK IGBT module	33
FS820R08A6P2LB	HybridPACK IGBT module	33
FS900R08A2P2_B31	HybridPACK IGBT module	32
FS900R08A2P2_B32	HybridPACK IGBT module	32
FZ30R07W1E3_B31A	Easy modules IGBT	33
IAUT150N10S5N035	OptiMOS™-5 80 V (Trench) MOSFETs	15
IAUT165N08S5N029	OptiMOS™-5 80 V (Trench) MOSFETs	15
IAUT300N08S5N012	OptiMOS™-5 80 V (Trench) MOSFETs	15
IAUT300N10S5N015	OptiMOS™-5 80 V (Trench) MOSFETs	15
IPB100N04S2-04	OptiMOS™ 40 V (Planar) MOSFETs	18
IPB100N04S4-H2	OptiMOS™-T2 40 V (Trench) MOSFETs	11
IPB100N06S2-05	OptiMOS™ 55 V (Planar) MOSFETs	18
IPB100N06S2L-05	OptiMOS™ 55 V (Planar) MOSFETs	18
IPB100N08S2-07	OptiMOS™ 75 V (Planar) MOSFETs	20
IPB100N08S2L-07	OptiMOS™ 75 V (Planar) MOSFETs	20
IPB100N12S3-05	OptiMOS™-T2 120 V (Trench) MOSFETs	16
IPB120N03S4L-03	OptiMOS™ 40 V (Planar) MOSFETs	10
IPB120N04S4-01	OptiMOS™-T2 40 V (Trench) MOSFETs	11
IPB120N04S4-02	OptiMOS™-T2 40 V (Trench) MOSFETs	11
IPB120N04S4-04	OptiMOS™-T2 40 V (Trench) MOSFETs	12
IPB120N04S4L-02	OptiMOS™-T2 40 V (Trench) MOSFETs	11
IPB120N06S4-02	OptiMOS™-T2 60 V (Trench) MOSFETs	13
IPB120N06S4-03	OptiMOS™-T2 60 V (Trench) MOSFETs	13
IPB120N06S4-H1	OptiMOS™-T2 60 V (Trench) MOSFETs	13
IPB120N08S4-03	OptiMOS™-T2 80 V (Trench) MOSFETs	15
IPB120N08S4-04	OptiMOS™-T2 80 V (Trench) MOSFETs	15
IPB120N10S4-03	OptiMOS™-T2 100 V (Trench) MOSFETs	15
IPB120N10S4-05	OptiMOS™-T2 100 V (Trench) MOSFETs	15
IPB120P04P4-04	OptiMOS™-P2 40 V P-Channel (Trench) MOSFETs	21
IPB120P04P4L-03	OptiMOS™-P2 40 V P-Channel (Trench) MOSFETs	21

Type list	Product family	
IPB140N08S4-04	OptiMOS™-T2 80 V (Trench) MOSFETs	15
IPB160N04S2-03	OptiMOS™ 40 V (Planar) MOSFETs	18
IPB160N04S2L-03	OptiMOS™ 40 V (Planar) MOSFETs	18
IPB160N04S4-H1	OptiMOS™-T2 40 V (Trench) MOSFETs	11
IPB160N04S4L-H1	OptiMOS™-T2 40 V (Trench) MOSFETs	11
IPB160N08S4-03	OptiMOS™-T2 80 V (Trench) MOSFETs	15
IPB17N25S3-100	OptiMOS™-T 250 V (Trench) MOSFETs	17
IPB180N03S4L-01	OptiMOS™-T2 30 V (Trench) MOSFETs	10
IPB180N03S4L-H0	OptiMOS™-T2 30 V (Trench) MOSFETs	10
IPB180N04S4-00	OptiMOS™-T2 40 V (Trench) MOSFETs	10
IPB180N04S4-01	OptiMOS™-T2 40 V (Trench) MOSFETs	11
IPB180N04S4-H0	OptiMOS™-T2 40 V (Trench) MOSFETs	11
IPB180N04S4L-01	OptiMOS™-T2 40 V (Trench) MOSFETs	11
IPB180N04S4L-H0	OptiMOS™-T2 40 V (Trench) MOSFETs	10
IPB180N06S4-H1	OptiMOS™-T2 60 V (Trench) MOSFETs	13
IPB180N08S4-02	OptiMOS™-T2 80 V (Trench) MOSFETs	15
IPB180N10S4-02	OptiMOS™-T2 100 V (Trench) MOSFETs	15
IPB180N10S4-03	OptiMOS™-T2 100 V (Trench) MOSFETs	15
IPB180P04P4-03	OptiMOS™-P2 40 V P-Channel (Trench) MOSFETs	21
IPB180P04P4L-02	OptiMOS™-P2 40 V P-Channel (Trench) MOSFETs	21
IPB22N03S4L-15	OptiMOS™-T2 30 V (Trench) MOSFETs	10
IPB240N03S4L-R8	OptiMOS™-T2 30 V (Trench) MOSFETs	10
IPB240N03S4L-R9	OptiMOS™-T2 30 V (Trench) MOSFETs	10
IPB240N04S4-1R0	OptiMOS™-T2 40 V (Trench) MOSFETs	10
IPB240N04S4-R9	OptiMOS™-T2 40 V (Trench) MOSFETs	10
IPB35N12S3L-26	OptiMOS™-T2 120 V (Trench) MOSFETs	16
IPB45N06S4L-08	OptiMOS™-T2 60 V (Trench) MOSFETs	13
IPB45P03P4L-11	OptiMOS™-T2 30 V P-Channel (Trench) MOSFETs	21
IPB50N10S3L-16	OptiMOS™-T 100 V (Trench) MOSFETs	16
IPB50N12S3L-15	OptiMOS™-T2 120 V (Trench) MOSFETs	16
IPB60R099CPA	CoolMOS™ CPA 600 V MOSFETs	29
IPB60R199CPA	CoolMOS™ CPA 600 V MOSFETs	29
IPB60R299CPA	CoolMOS™ CPA 600 V MOSFETs	29
IPB64N25S3-20	OptiMOS™-T 250 V (Trench) MOSFETs	17
IPB65R110CFDA	CoolMOS™ CFDA 650 V MOSFETs	29
IPB65R150CFDA	CoolMOS™ CFDA 650 V MOSFETs	29
IPB65R190CFDA	CoolMOS™ CFDA 650 V MOSFETs	29
IPB65R310CFDA	CoolMOS™ CFDA 650 V MOSFETs	29
IPB65R660CFDA	CoolMOS™ CFDA 650 V MOSFETs	29
IPB70N04S4-06	OptiMOS™-T2 40 V (Trench) MOSFETs	12
IPB70N10S3-12	OptiMOS™-T 100 V (Trench) MOSFETs	15
IPB70N12S3-11	OptiMOS™-T2 120 V (Trench) MOSFETs	16
IPB70N12S3L-12	OptiMOS™-T2 120 V (Trench) MOSFETs	16
IPB70P04P4-09	OptiMOS™-P2 40 V P-Channel (Trench) MOSFETs	21
IPB77N06S2-12	OptiMOS™ 55 V (Planar) MOSFETs	19
IPB80N03S4L-02	OptiMOS™-T2 30 V (Trench) MOSFETs	10
IPB80N03S4L-03	OptiMOS™-T2 30 V (Trench) MOSFETs	10
IPB80N04S2-04	OptiMOS™ 40 V (Planar) MOSFETs	18
IPB80N04S2-H4	OptiMOS™ 40 V (Planar) MOSFETs	18
IPB80N04S4-03	OptiMOS™-T2 40 V (Trench) MOSFETs	12
IPB80N04S4-04	OptiMOS™-T2 40 V (Trench) MOSFETs	12
IPB80N04S4L-04	OptiMOS™-T2 40 V (Trench) MOSFETs	12
IPB80N06S2-05	OptiMOS™ 55 V (Planar) MOSFETs	18
IPB80N06S2-07	OptiMOS™ 55 V (Planar) MOSFETs	19
IPB80N06S2-08	OptiMOS™ 55 V (Planar) MOSFETs	19
IPB80N06S2-09	OptiMOS™ 55 V (Planar) MOSFETs	19
IPB80N06S2-H5	OptiMOS™ 55 V (Planar) MOSFETs	18
IPB80N06S2L-06	OptiMOS™ 55 V (Planar) MOSFETs	19
IPB80N06S2L-07	OptiMOS™ 55 V (Planar) MOSFETs	19
IPB80N06S2L-09	OptiMOS™ 55 V (Planar) MOSFETs	19
IPB80N06S2L-H5	OptiMOS™ 55 V (Planar) MOSFETs	18
IPB80N06S4-05	OptiMOS™-T2 60 V (Trench) MOSFETs	13
IPB80N06S4-07	OptiMOS™-T2 60 V (Trench) MOSFETs	13
IPB80N06S4L-05	OptiMOS™-T2 60 V (Trench) MOSFETs	13
IPB80N06S4L-07	OptiMOS™-T2 60 V (Trench) MOSFETs	13
IPB80N08S2-07	OptiMOS™ 75 V (Planar) MOSFETs	20

Downloaded from Arrow.com.

Glossary

Type list	Product family	
IPB80N08S2L-07	OptiMOS™ 75 V (Planar) MOSFETs	20
IPB80N08S4-06	OptiMOS™-T2 80 V (Trench) MOSFETs	15
IPB80P03P4-05	OptiMOS™-T2 30 V P-Channel (Trench) MOSFETs	21
IPB80P03P4L-04	OptiMOS™-T2 30 V P-Channel (Trench) MOSFETs	21
IPB80P03P4L-07	OptiMOS™-T2 30 V P-Channel (Trench) MOSFETs	21
IPB80P04P4-05	OptiMOS™-P2 40 V P-Channel (Trench) MOSFETs	21
IPB80P04P4-07	OptiMOS™-P2 40 V P-Channel (Trench) MOSFETs	21
IPB80P04P4L-04	OptiMOS™-P2 40 V P-Channel (Trench) MOSFETs	21
IPB80P04P4L-06	OptiMOS™-P2 40 V P-Channel (Trench) MOSFETs	21
IPB90N04S4-02	OptiMOS™-T2 40 V (Trench) MOSFETs	11
IPB90N06S4-04	OptiMOS™-T2 60 V (Trench) MOSFETs	13
IPB90N06S4L-04	OptiMOS™-T2 60 V (Trench) MOSFETs	13
IPC100N04S5-1R2	OptiMOS™-5 40 V (Trench) MOSFETs	11
IPC100N04S5-1R7	OptiMOS™-5 40 V (Trench) MOSFETs	11
IPC100N04S5-1R9	OptiMOS™-5 40 V (Trench) MOSFETs	11
IPC100N04S5-2R8	OptiMOS™-5 40 V (Trench) MOSFETs	11
IPC100N04S5L-1R1	OptiMOS™-5 40 V (Trench) MOSFETs	11
IPC100N04S5L-1R5	OptiMOS™-5 40 V (Trench) MOSFETs	11
IPC100N04S5L-1R9	OptiMOS™-5 40 V (Trench) MOSFETs	11
IPC100N04S5L-2R6	OptiMOS™-5 40 V (Trench) MOSFETs	11
IPC50N04S5-5R8	OptiMOS™-5 40 V (Trench) MOSFETs	12
IPC50N04S5L-5R5	OptiMOS™-5 40 V (Trench) MOSFETs	12
IPC70N04S5-4R6	OptiMOS™-5 40 V (Trench) MOSFETs	12
IPC70N04S5L-4R2	OptiMOS™-5 40 V (Trench) MOSFETs	12
IPC90N04S5-3R6	OptiMOS™-5 40 V (Trench) MOSFETs	12
IPC90N04S5L-3R3	OptiMOS™-5 40 V (Trench) MOSFETs	12
IPD100N04S4-02	OptiMOS™-T2 40 V (Trench) MOSFETs	11
IPD100N04S4L-02	OptiMOS™-T2 40 V (Trench) MOSFETs	11
IPD100N06S4-03	OptiMOS™-T2 60 V (Trench) MOSFETs	13
IPD14N06S2-80	OptiMOS™ 55 V (Planar) MOSFETs	19
IPD15N06S2L-64	OptiMOS™ 55 V (Planar) MOSFETs	19
IPD22N08S2L-50	OptiMOS™ 75 V (Planar) MOSFETs	20
IPD25N06S2-40	OptiMOS™ 55 V (Planar) MOSFETs	19
IPD25N06S4L-30	OptiMOS™-T2 60 V (Trench) MOSFETs	14
IPD26N06S2L-35	OptiMOS™ 55 V (Planar) MOSFETs	19
IPD30N03S2L-10	OptiMOS™ 30 V (Planar) MOSFETs	18
IPD30N03S2L-20	OptiMOS™ 30 V (Planar) MOSFETs	18
IPD30N03S4L-09	OptiMOS™-T2 30 V (Trench) MOSFETs	10
IPD30N03S4L-14	OptiMOS™-T2 30 V (Trench) MOSFETs	10
IPD30N06S2-15	OptiMOS™ 55 V (Planar) MOSFETs	19
IPD30N06S2-23	OptiMOS™ 55 V (Planar) MOSFETs	19
IPD30N06S2L-13	OptiMOS™ 55V (Planar) MOSFETs	19
IPD30N06S2L-23	OptiMOS™ 55 V (Planar) MOSFETs	19
IPD30N06S4L-23	OptiMOS™-T2 60 V (Trench) MOSFETs	14
IPD30N08S2-22	OptiMOS™ 75 V (Planar) MOSFETs	20
IPD30N08S2L-21	OptiMOS™ 75 V (Planar) MOSFETs	20
IPD30N10S3L-34	OptiMOS™-T 100 V (Trench) MOSFETs	16
IPD30N12S3L-31	OptiMOS™-T2 120 V (Trench) MOSFETs	16
IPD35N10S3L-26	OptiMOS™-T 100 V (Trench) MOSFETs	16
IPD35N12S3L-24	OptiMOS™-T2 120 V (Trench) MOSFETs	16
IPD40N03S4L-08	OptiMOS™-T2 30 V (Trench) MOSFETs	10
IPD50N03S2-07	OptiMOS™ 30 V (Planar) MOSFETs	18
IPD50N03S2L-06	OptiMOS™ 30 V (Planar) MOSFETs	18
IPD50N03S4L-06	OptiMOS™-T2 30 V (Trench) MOSFETs	10
IPD50N04S4-08	OptiMOS™-T2 40 V (Trench) MOSFETs	12
IPD50N04S4-10	OptiMOS™-T2 40 V (Trench) MOSFETs	12
IPD50N04S4L-08	OptiMOS™-T2 40 V (Trench) MOSFETs	12
IPD50N06S2-14	OptiMOS™ 55 V (Planar) MOSFETs	19
IPD50N06S2L-13	OptiMOS™ 55 V (Planar) MOSFETs	19
IPD50N06S4-09	OptiMOS™-T2 60 V (Trench) MOSFETs	14
IPD50N06S4L-08	OptiMOS™-T2 60 V (Trench) MOSFETs	13
IPD50N06S4L-12	OptiMOS™-T2 60 V (Trench) MOSFETs	14
IPD50N08S4-13	OptiMOS™-T2 80 V (Trench) MOSFETs	15
IPD50N12S3L-15	OptiMOS™-T2 120 V (Trench) MOSFETs	16
IPD50P03P4L-11	OptiMOS™-T2 30 V P-Channel (Trench) MOSFETs	21
IPD50P04P4-13	OptiMOS™-P2 40 V P-Channel (Trench) MOSFETs	21

Type list	Product family	
IPD50P04P4L-11	OptiMOS™-P2 40 V P-Channel (Trench) MOSFETs	21
IPD5N25S3-430	OptiMOS™-T 250 V (Trench) MOSFETs	17
IPD60N10S4-12	OptiMOS™-T2 100 V (Trench) MOSFETs	15
IPD60N10S4L-12	OptiMOS™-T2 100 V (Trench) MOSFETs	15
IPD65R420CFDA	CoolMOS™ CFDA 650 V	29
IPD65R660CFDA	CoolMOS™ CFDA 650 V	29
IPD70N03S4L-04	OptiMOS™-T2 30 V (Trench) MOSFETs	10
IPD70N12S3-11	OptiMOS™-T2 120 V (Trench) MOSFETs	16
IPD70N12S3L-12	OptiMOS™-T2 120 V (Trench) MOSFETs	16
IPD70P04P4-09	OptiMOS™-P2 40 V P-Channel (Trench) MOSFETs	21
IPD70P04P4L-08	OptiMOS™-P2 40 V P-Channel (Trench) MOSFETs	21
IPD80P03P4L-07	OptiMOS™-T2 30 V P-Channel (Trench) MOSFETs	21
IPD85P04P4-07	OptiMOS™-P2 40 V P-Channel (Trench) MOSFETs	21
IPD85P04P4L-06	OptiMOS™-P2 40 V P-Channel (Trench) MOSFETs	21
IPD90N03S4L-02	OptiMOS™-T2 30 V (Trench) MOSFETs	10
IPD90N03S4L-03	OptiMOS™-T2 30 V (Trench) MOSFETs	10
IPD90N04S4-02	OptiMOS™-T2 40 V (Trench) MOSFETs	11
IPD90N04S4-03	OptiMOS™-T2 40 V (Trench) MOSFETs	12
IPD90N04S4-04	OptiMOS™-T2 40 V (Trench) MOSFETs	12
IPD90N04S4L-04	OptiMOS™-T2 40 V (Trench) MOSFETs	12
IPD90N06S4-04	OptiMOS™-T2 60 V (Trench) MOSFETs	13
IPD90N06S4-05	OptiMOS™-T2 60 V (Trench) MOSFETs	13
IPD90N06S4-07	OptiMOS™-T2 60 V (Trench) MOSFETs	13
IPD90N06S4L-03	OptiMOS™-T2 60 V (Trench) MOSFETs	13
IPD90N06S4L-05	OptiMOS™-T2 60 V (Trench) MOSFETs	13
IPD90N06S4L-06	OptiMOS™-T2 60 V (Trench) MOSFETs	13
IPD90N08S4-05	OptiMOS™-T2 80 V (Trench) MOSFETs	15
IPD90N10S4-06	OptiMOS™-T2 100 V (Trench) MOSFETs	15
IPD90N10S4L-06	OptiMOS™-T2 100 V (Trench) MOSFETs	15
IPD90P03P4-04	OptiMOS™-T2 30 V P-Channel (Trench) MOSFETs	21
IPD90P03P4L-04	OptiMOS™-T2 30 V P-Channel (Trench) MOSFETs	21
IPD90P04P4-05	OptiMOS™-P2 40 V P-Channel (Trench) MOSFETs	21
IPD90P04P4L-04	OptiMOS™-P2 40 V P-Channel (Trench) MOSFETs	21
IPG16N10S4-61A	OptiMOS™-T2 dual N-Channel 100 V MOSFETs	16
IPG16N10S4L-61A	OptiMOS™-T2 dual N-Channel 100 V MOSFETs	16
IPG20N04S4-08A	OptiMOS™-T2 dual N-Channel 40 V MOSFETs	12
IPG20N04S4-12A	OptiMOS™-T2 dual N-Channel 40 V MOSFETs	12
IPG20N04S4L-07A	OptiMOS™-T2 dual N-Channel 40 V MOSFETs	12
IPG20N04S4L-08A	OptiMOS™-T2 dual N-Channel 40 V MOSFETs	12
IPG20N04S4L-11A	OptiMOS™-T2 dual N-Channel 40 V MOSFETs	12
IPG20N06S2L-35	OptiMOS™ dual N-Channel 55 V MOSFETs	19
IPG20N06S2L-35A	OptiMOS™ dual N-Channel 55 V MOSFETs	19
IPG20N06S2L-50	OptiMOS™ dual N-Channel 55 V MOSFETs	19
IPG20N06S2L-50A	OptiMOS™ dual N-Channel 55 V MOSFETs	19
IPG20N06S2L-65	OptiMOS™ dual N-Channel 55 V MOSFETs	19
IPG20N06S2L-65A	OptiMOS™ dual N-Channel 55 V MOSFETs	19
IPG20N06S4-15	OptiMOS™-T2 dual N-Channel 60 V MOSFETs	14
IPG20N06S4-15A	OptiMOS™-T2 dual N-Channel 60 V MOSFETs	14
IPG20N06S4L-11	OptiMOS™-T2 dual N-Channel 60 V MOSFETs	14
IPG20N06S4L-11A	OptiMOS™-T2 dual N-Channel 60 V MOSFETs	14
IPG20N06S4L-14	OptiMOS™-T2 dual N-Channel 60 V MOSFETs	14
IPG20N06S4L-14A	OptiMOS™-T2 dual N-Channel 60 V MOSFETs	14
IPG20N06S4L-26	OptiMOS™-T2 dual N-Channel 60 V MOSFETs	14
IPG20N06S4L-26A	OptiMOS™-T2 dual N-Channel 60 V MOSFETs	14
IPG20N10S4-36A	OptiMOS™-T2 dual N-Channel 100 V MOSFETs	16
IPG20N10S4L-22A	OptiMOS™-T2 dual N-Channel 100 V MOSFETs	16
IPG20N10S4L-35A	OptiMOS™-T2 dual N-Channel 100 V MOSFETs	16
IPI100N04S4-H2	OptiMOS™-T2 dual N-Channel 100 V MOSFETs	11
IPI100N08S2-07	OptiMOS™ 75 V (Planar) MOSFETs	20
IPI100N12S3-05	OptiMOS™-T2 120 V (Trench) MOSFETs	16
IPI120N04S4-01	OptiMOS™-T2 40 V (Trench) MOSFETs	11
IPI120N04S4-01	OptiMOS™-T2 40 V (Trench) MOSFETs	11
IPI120N04S4-02	OptiMOS™-T2 40 V (Trench) MOSFETs	11
IPI120N06S4-02	OptiMOS™-T2 60 V (Trench) MOSFETs	13
IPI120N08S4-03	OptiMOS™-T2 80 V (Trench) MOSFETs	15
IPI120N08S4-04	OptiMOS™-T2 80 V (Trench) MOSFETs	15

Downloaded from Arrow.com.

Type list	Product family	
IPI120N10S4-03	OptiMOS™-T2 100 V (Trench) MOSFETs	15
IPI120N10S4-05	OptiMOS™-T2 100 V (Trench) MOSFETs	15
IPI45N04S4L-08	OptiMOS™-T2 40 V (Trench) MOSFETs	12
IPI45N06S4-09	OptiMOS™-T2 60 V (Trench) MOSFETs	14
IPI45N06S4L-08	OptiMOS™-T2 60 V (Trench) MOSFETs	14
IPI50N10S3L-16	OptiMOS™-T 100 V (Trench) MOSFETs	16
IPI50N12S3L-15	OptiMOS™-T2 120 V (Trench) MOSFETs	16
IPI60R099CPA	CoolMOS™ CPA 600 V	29
IPI70N04S4-06	OptiMOS™-T2 40 V (Trench) MOSFETs	12
IPI70N10S3-12	OptiMOS™-T 100 V (Trench) MOSFETs	15
IPI70N12S3-11	OptiMOS™-T2 120 V (Trench) MOSFETs	16
IPI70N12S3L-12	OptiMOS™-T2 120 V (Trench) MOSFETs	16
IPI80N03S4L-03	OptiMOS™-T2 30 V (Trench) MOSFETs	10
IPI80N04S2-04	OptiMOS™ 40 V (Planar) MOSFETs	18
IPI80N04S2-H4	OptiMOS™ 40 V (Planar) MOSFETs	18
IPI80N04S4-03	OptiMOS™-T2 40 V (Trench) MOSFETs	12
IPI80N04S4-04	OptiMOS™-T2 40 V (Trench) MOSFETs	12
IPI80N04S4L-04	OptiMOS™-T2 40 V (Trench) MOSFETs	12
IPI80N06S2-07	OptiMOS™ 55 V (Planar) MOSFETs	19
IPI80N06S2-08	OptiMOS™ 55 V (Planar) MOSFETs	19
IPI80N06S2L-05	OptiMOS™ 55 V (Planar) MOSFETs	18
IPI80N06S4-05	OptiMOS™-T2 60 V (Trench) MOSFETs	13
IPI80N06S4-07	OptiMOS™-T2 60 V (Trench) MOSFETs	13
IPI80N06S4L-07	OptiMOS™-T2 60 V (Trench) MOSFETs	13
IPI80N08S2-07	OptiMOS™ 75 V (Planar) MOSFETs	20
IPI80N08S4-06	OptiMOS™-T2 80 V (Trench) MOSFETs	15
IPI90N04S4-02	OptiMOS™-T2 40 V (Trench) MOSFETs	11
IPI90N06S4-04	OptiMOS™-T2 60 V (Trench) MOSFETs	13
IPI90N06S4L-04	OptiMOS™-T2 60 V (Trench) MOSFETs	13
IPLU250N04S4-1R7	OptiMOS™-T2 40 V (Trench) MOSFETs	11
IPLU300N04S4-1R1	OptiMOS™-T2 40 V (Trench) MOSFETs	11
IPLU300N04S4-R8	OptiMOS™-T2 40 V (Trench) MOSFETs	10
IPP100N04S4-H2	OptiMOS™-T2 40 V (Trench) MOSFETs	11
IPP100N06S2L-05	OptiMOS™ 55 V (Planar) MOSFETs	18
IPP100N08S2-07	OptiMOS™ 75 V (Planar) MOSFETs	20
IPP100N08S2L-07	OptiMOS™ 75 V (Planar) MOSFETs	20
IPP100N12S3-05	OptiMOS™-T2 120 V (Trench) MOSFETs	16
IPP120N06S4-H1	OptiMOS™-T2 60 V (Trench) MOSFETs	13
IPP120N08S4-03	OptiMOS™-T2 80 V (Trench) MOSFETs	15
IPP120N08S4-04	OptiMOS™-T2 80 V (Trench) MOSFETs	15
IPP120N10S4-03	OptiMOS™-T2 100 V (Trench) MOSFETs	15
IPP120N10S4-05	OptiMOS™-T2 100 V (Trench) MOSFETs	15
IPP120P04P4L-03	OptiMOS™-P2 40 V P-Channel (Trench) MOSFETs	21
IPP17N25S3-100	OptiMOS™-T 250 V (Trench) MOSFETs	17
IPP45N04S4L-08	OptiMOS™-T2 40 V (Trench) MOSFETs	12
IPP45N06S4-09	OptiMOS™-T2 60 V (Trench) MOSFETs	14
IPP50N10S3L-16	OptiMOS™-T 100 V (Trench) MOSFETs	16
IPP50N12S3L-15	OptiMOS™-T2 120 V (Trench) MOSFETs	16
IPP60R099CPA	CoolMOS™ CPA 600 V	29
IPP65R110CFDA	CoolMOS™ CFDA 650 V	29
IPP65R150CFDA	CoolMOS™ CFDA 650 V	29
IPP65R190CFDA	CoolMOS™ CFDA 650 V	29
IPP65R310CFDA	CoolMOS™ CFDA 650 V	29
IPP65R660CFDA	CoolMOS™ CFDA 650 V	29
IPP70N04S4-06	OptiMOS™-T2 40 V (Trench) MOSFETs	12
IPP70N10S3L-12	OptiMOS™-T 100 V (Trench) MOSFETs	15
IPP70N12S3-11	OptiMOS™-T2 120 V (Trench) MOSFETs	16
IPP70N12S3L-12	OptiMOS™-T2 120 V (Trench) MOSFETs	16
IPP77N06S2-12	OptiMOS™ 55 V (Planar) MOSFETs	19
IPP80N03S4L-03	OptiMOS™-T2 30 V (Trench) MOSFETs	10
IPP80N04S4-03	OptiMOS™-T2 40 V (Trench) MOSFETs	12
IPP80N04S4-04	OptiMOS™-T2 40 V (Trench) MOSFETs	12
IPP80N04S4L-04	OptiMOS™-T2 40 V (Trench) MOSFETs	12
IPP80N06S2-07	OptiMOS™ 55 V (Planar) MOSFETs	19
IPP80N06S2-09	OptiMOS™ 55 V (Planar) MOSFETs	19
IPP80N06S2-H5	OptiMOS™ 55 V (Planar) MOSFETs	18

Type list	Product family	
IPP80N06S2L-07	OptiMOS™ 55 V (Planar) MOSFETs	19
IPP80N06S2L-09	OptiMOS™ 55 V (Planar) MOSFETs	19
IPP80N06S2L-09	OptiMOS™ 55 V (Planar) MOSFETs	19
IPP80N06S2L-H5	OptiMOS™ 55 V (Planar) MOSFETs	18
IPP80N07S4-05	OptiMOS™-T2 80 V (Trench) MOSFETs	15
IPP80N08S2L-07	OptiMOS™ 75 V (Planar) MOSFETs	20
IPP80N08S4-06	OptiMOS™-T2 80 V (Trench) MOSFETs	14
IPP80P03P4L-04	OptiMOS™-T2 30 V P-Channel (Trench) MOSFETs	21
IPW60R045CPA	CoolMOS™ CPA 600 V	29
IPW60R075CPA	CoolMOS™ CPA 600 V	29
IPW60R099CPA	CoolMOS™ CPA 600 V	29
IPW65R048CFDA	OptiMOS™-T2 60 V (Trench) MOSFETs	29
IPW65R080CFDA	CoolMOS™ CFDA 650 V	29
IPW65R110CFDA	CoolMOS™ CFDA 650 V	29
IPW65R150CFDA	CoolMOS™ CFDA 650 V	29
IPW65R190CFDA	CoolMOS™ CFDA 650 V	29
IPZ40N04S5-3R1	OptiMOS™-T 40 V (Trench) MOSFETs	11
IPZ40N04S5-5R4	OptiMOS™-T 40 V (Trench) MOSFETs	12
IPZ40N04S5-8R4	OptiMOS™-T 40 V (Trench) MOSFETs	12
IPZ40N04S5L-2R8	OptiMOS™-T 40 V (Trench) MOSFETs	11
IPZ40N04S5L-4R8	OptiMOS™-T 40 V (Trench) MOSFETs	12
IPZ40N04S5L-7R4	OptiMOS™-T 40 V (Trench) MOSFETs	12
SN7002N	Small Signal SIPMOS™ N-Channel 60 V	25
SN7002W	Small Signal SIPMOS™ N-Channel 60 V	25
TCA3727G	Stepper motor driver (integrated low-current motor drivers)	63
TLD1120EL	LITIX™ Basic Automotive LED driver IC	58
TLD1121EL	LITIX™ Basic Automotive LED driver IC	58
TLD1124EL	LITIX™ Basic Automotive LED driver IC	58
TLD1125EL	LITIX™ Basic Automotive LED driver IC	58
TLD1211SJ	LITIX™ Linear Automotive LED driver IC	57
TLD1310EL	LITIX™ Basic Automotive LED driver IC	58
TLD1311EL	LITIX™ Basic Automotive LED driver IC	58
TLD1312EL	LITIX™ Basic Automotive LED driver IC	58
TLD1313EL	LITIX™ Basic Automotive LED driver IC	58
TLD1314EL	LITIX™ Basic Automotive LED driver IC	58
TLD1315EL	LITIX™ Basic Automotive LED driver IC	58
TLD1326EL	LITIX™ Basic Automotive LED driver IC	58
TLD2310EL	LITIX™ Basic Automotive LED driver IC	58
TLD2311EL	LITIX™ Basic Automotive LED driver IC	58
TLD2314EL	LITIX™ Basic Automotive LED driver IC	58
TLD2326EL	LITIX™ Basic Automotive LED driver IC	58
TLD5045EJ	LITIX™ Power Automotive LED driver IC	59
TLD5095EL	LITIX™ Power Automotive LED driver IC	59
TLD5097EL	LITIX™ Power Automotive LED driver IC	59
TLD5098EL	LITIX™ Power Automotive LED driver IC	59
TLD5190QU	LITIX™ Power Automotive LED driver IC	59
TLD5190QV	LITIX™ Power Flex Automotive LED driver IC	59
TLD5501-2QV	LITIX™ Power Flex Automotive LED driver IC	60
TLD5541-1QU	LITIX™ Power Flex Automotive LED driver IC	60
TLD5541-1QV	LITIX™ Power Flex Automotive LED driver IC	60
TLD5541-2QV	LITIX™ Power Flex Automotive LED driver IC	60
TLE4205G	Servo driver (integrated low-current motor drivers)	64
TLE4206-2G	Servo driver (integrated low-current motor drivers)	64
TLE4207G	Motor control IC (integrated low-current motor drivers)	65
TLE4208G	Stepper motor driver, motor control IC (integrated low-current motor drivers)	63
TLE4209G	Servo driver (integrated low-current motor drivers)	64
TLE42344	Power supply linear voltage regulators	85
TLE42364	Power supply linear voltage regulators	85
TLE4241GM	LITIX™ Linear Automotive LED driver IC	57
TLE4242EJ	LITIX™ Linear Automotive LED driver IC	57
TLE4242G	LITIX™ Linear Automotive LED driver IC	57
TLE4250-2	Power supply trackers	91
TLE4251	Power supply trackers	91
TLE4252	Power supply trackers	91
TLE4253	Power supply trackers	91
TLE4254	Power supply trackers	91

Downloaded from Arrow.com.

Glossary

Type list	Product family	
TLE4263/-2	Power supply linear voltage regulators	85
TLE42644	Power supply linear voltage regulators	85
TLE42664	Power supply linear voltage regulators	85
TLE4267-2	Power supply linear voltage regulators	85
TLE4267-2	Power supply linear voltage regulators	86
TLE4268	Power supply linear voltage regulators	85
TLE42694	Power supply linear voltage regulators	85
TLE42694-2	Power supply linear voltage regulators	85
TLE4271-2	Power supply linear voltage regulators	86
TLE42744	Power supply linear voltage regulators	85
TLE42754	Power supply linear voltage regulators	85
TLE42764	Power supply linear voltage regulators	85
TLE4278	Power supply linear voltage regulators	85
TLE42794	Power supply linear voltage regulators	85
TLE4284	Power supply linear voltage regulators	85
TLE4285	Power supply linear voltage regulators	85
TLE4286	Power supply linear voltage regulators	85
TLE4291	Power supply linear voltage regulators	85
TLE4294	Power supply linear voltage regulators	85
TLE4295	Power supply linear voltage regulators	85
TLE4296-2	Power supply linear voltage regulators	85
TLE42994	Power supply linear voltage regulators	85
TLE4470	Power supply multiple output regulators	86
TLE4470	Power supply multiple output regulators	86
TLE4471	Power supply multiple output regulators	86
TLE4471	Power supply multiple output regulators	86
TLE4473/-2	Power supply multiple output regulators	86
TLE4476	Power supply multiple output regulators	86
TLE4476	Power supply multiple output regulators	86
TLE4675	Power supply linear voltage regulators	85
TLE4678/-2	Power supply linear voltage regulators	85
TLE4699	Power supply linear voltage regulators	85
TLE4726G	Stepper motor driver (integrated low-current motor drivers)	63
TLE4729G	Stepper motor driver (integrated low-current motor drivers)	63
TLE5205-2G	Powertrain H-bridges for electronic throttle controls	114
TLE5206-2S	Powertrain H-bridges for electronic throttle controls	114
TLE6208-3G	Motor control IC (integrated low-current motor drivers)	65
TLE6208-6G	Motor control IC (integrated low-current motor drivers)	65
TLE6209R	Powertrain H-bridges for electronic throttle controls	114
TLE6220GP	Flex – smart multichannel switch for powertrain/safety applications	44
TLE6230GP	Flex – smart multichannel switch for powertrain/safety applications	44
TLE6232GP	Flex – smart multichannel switch for powertrain/safety applications	44
TLE6240GP	Flex – smart multichannel switch for powertrain/safety applications	44
TLE6250G	CAN transceivers	103
TLE6250GV33	CAN transceivers	103
TLE6251-2G	CAN transceivers	104
TLE6251-3G	CAN transceivers	104
TLE6251D	CAN transceivers	104
TLE6251DS	CAN transceivers	104
TLE6254-3G	CAN transceivers	104
TLE6258-2G	LIN transceivers	101
TLE6288R	Constant current control ICs	113
TLE6365	DC-DC converters	94
TLE6368	DC-DC converters	99
TLE6389-2GV	DC-DC converters	94
TLE6389-2GV50	DC-DC converters	94
TLE6389-3GV50	DC-DC converters	94
TLE6710	Airbag firing ICs	118
TLE6711	DC-DC converters	99
TLE7182EM	H-bridge (gate driver ICs for external MOSFETs)	70
TLE7183F	3-phase bridge driver IC (gate driver ICs for external MOSFETs)	70
TLE7183QU	3-phase bridge driver IC (gate driver ICs for external MOSFETs)	70
TLE7184F	3-phase bridge driver IC (gate driver ICs for external MOSFETs)	70
TLE7184F-3V	3-phase bridge driver IC (gate driver ICs for external MOSFETs)	70
TLE7185E	3-phase bridge driver IC (gate driver ICs for external MOSFETs)	70
TLE7189F	3-phase bridge driver IC (gate driver ICs for external MOSFETs)	70

Type list	Product family	
TLE7189QK	3-phase bridge driver IC (gate driver ICs for external MOSFETs)	70
TLE7209-3R	Powertrain H-bridges for electronic throttle controls	114
TLE7230R	SPIDER: smart multichannel switches for body	41
TLE7233EM	SPIDER: smart multichannel switches for body	41
TLE7241E	Constant current control ICs	113
TLE7242-2G	Constant current control ICs	113
TLE7244SL	SPIDER: smart multichannel switches for body	41
TLE7250G	CAN transceivers	103
TLE7250GVIO	CAN transceivers	103
TLE7250LE	CAN transceivers	103
TLE7250SJ TLE8250SJ	CAN transceivers	103
TLE7250VLE	CAN transceivers	103
TLE7250VSJ TLE8250VSJ	CAN transceivers	103
TLE7250XLE	CAN transceivers	103
TLE7250XSJ TLE8250XSJ	CAN transceivers	103
TLE7251VLE	CAN transceivers	104
TLE7251VSJ TLE8251VSJ	CAN transceivers	104
TLE7257LE	LIN transceivers	101
TLE7257SJ	LIN transceivers	101
TLE7258D	LIN transceivers	101
TLE7258LE	LIN transceivers	101
TLE7258SJ	LIN transceivers	101
TLE7259-3GE	LIN transceivers	101
TLE7259-3LE	LIN transceivers	101
TLE7268LC	LIN transceivers	101
TLE7268SK	LIN transceivers	101
TLE7269G	LIN transceivers	101
TLE7270-2	Power supply linear voltage regulators	85
TLE7272-2	Power supply linear voltage regulators	85
TLE7273-2	Power supply linear voltage regulators	85
TLE7274-2	Power supply linear voltage regulators	85
TLE7276-2	Power supply linear voltage regulators	85
TLE7278-2	Power supply linear voltage regulators	85
TLE7279-2	Power supply linear voltage regulators	85
TLE7368	DC-DC converters	99
TLE7368-2	DC-DC converters	99
TLE7368-3	DC-DC converters	99
TLE7469G	Power supply multiple output regulators	86
TLE75004-EPD	SPIDER+: smart multichannel switches for body	41
TLE75008-ESD	SPIDER+: smart multichannel switches for body	41
TLE75080-ESD	SPIDER+: smart multichannel switches for body	41
TLE75080-ESH	SPIDER+ LED: smart multichannel switches for body	41
TLE75080-ESH	SPIDER+ LED: smart multichannel switches for body	61
TLE75242-ESD	SPIDER+: smart multichannel switches for body	41
TLE75242-ESH	SPIDER+: smart multichannel switches for body LED	41
TLE75242-ESH	SPIDER+ LED: smart multichannel switches for body	61
TLE75602-ESD	SPIDER: smart multichannel switches for body	41
TLE75602-ESH	SPIDER+ LED: smart multichannel switches for body	41
TLE75602-ESH	SPIDER+ LED: smart multichannel switches for body	61
TLE75620-EST	SPIDER+ LED: smart multichannel switches for body	41
TLE75620-EST	SPIDER+ LED: smart multichannel switches for body	61
TLE7714	Airbag firing ICs	118
TLE7718	Airbag firing ICs	118
TLE8080-2EM	Small engine management ICs	117
TLE8080-3EM	Small engine management ICs	117
TLE8080EM	Small engine management ICs	117
TLE8088EM	Small engine management ICs	117
TLE8102SG	Flex – smart multichannel switch for powertrain/safety applications	44
TLE8104E	Flex – smart multichannel switch for powertrain/safety applications	44
TLE8108EM	Flex – smart multichannel switch for powertrain/safety applications	44
TLE8110ED	Flex – smart multichannel switch for powertrain/safety applications	44
TLE8209-2SA	Powertrain H-bridges for electronic throttle controls	114

Downloaded from Arrow.com.

Type list	Product family	
TLE8242-2L	Constant current control ICs	113
TLE82452-3SA	Constant current control ICs	113
TLE82462-3SA	Constant current control ICs	113
TLE82463-3SA	Constant current control ICs	113
TLE8250G	CAN transceivers	103
TLE8250GVIO	CAN transceivers	103
TLE82543-3SA	Constant current control ICs	113
TLE8366	DC-DC converters	94
TLE8386	DC-DC converters	94
TLE8386-2	DC-DC converters	94
TLE8444SL	Stepper motor driver, motor control IC (integrated low-current motor drivers)	65
TLE8444SL	Stepper motor driver, motor control IC (integrated low-current motor drivers)	63
TLE8457ALE	LIN transceivers	101
TLE8457ASJ	LIN transceivers	101
TLE8457BLE	LIN transceivers	101
TLE8457BSJ	LIN transceivers	101
TLE8458G	LIN transceivers	101
TLE8458GV33	LIN transceivers	101
TLE8718SA	Flex – smart multichannel switch for powertrain/safety applications	44
TLE8754	Airbag firing ICs	118
TLE8758	Airbag firing ICs	118
TLE8888-1QK	Engine management ICs	115
TLE8888-2QK	Engine management ICs	115
TLE8888QK	Engine management ICs	115
TLE9104SH	Flex – smart multichannel switch for powertrain/safety applications	44
TLE9201SG	Powertrain H-bridges for electronic throttle controls	114
TLE9202ED	Powertrain H-bridges for electronic throttle controls	114
TLE9221SX	FlexRay transceivers	104
TLE9222LC	FlexRay transceivers	104
TLE9222PX	FlexRay transceivers	104
TLE9250LE	CAN transceivers	103
TLE9250SJ	CAN transceivers	103
TLE9250VLE	CAN transceivers	103
TLE9250VSJ	CAN transceivers	103
TLE9250XLE	CAN transceivers	103
TLE9250XSJ	CAN transceivers	103
TLE9251LE	CAN transceivers	104
TLE9251SJ	CAN transceivers	104
TLE9251VLE	CAN transceivers	104
TLE9251VSJ	CAN transceivers	104
TLE9252VLC	CAN transceivers	104
TLE9252VSK	CAN transceivers	104
TLE9255WLC	CAN transceivers	104
TLE9255WSK	CAN transceivers	104
TLE9260QX	System Basis Chips (SBCs)	111
TLE9261-3BQX(V33)	System Basis Chips (SBCs)	111
TLE9261BQX(V33)	System Basis Chips (SBCs)	111
TLE9261QX	System Basis Chips (SBCs)	111
TLE9262-3BQX(V33)	System Basis Chips (SBCs)	111
TLE9262BQX(V33)	System Basis Chips (SBCs)	111
TLE9262QX	System Basis Chips (SBCs)	112
TLE9263-3BQX(V33)	System Basis Chips (SBCs)	111
TLE9263BQX(V33)	System Basis Chips (SBCs)	111
TLE9263QX	System Basis Chips (SBCs)	112
TLE9271QX(V33)	System Basis Chips (SBCs)	112
TLE9272QX(V33)	System Basis Chips (SBCs)	112
TLE9273QX(V33)	System Basis Chips (SBCs)	112
TLE9278-3QX	System Basis Chips (SBCs)	112
TLE9278-3QX V33	System Basis Chips (SBCs)	112
TLE9278QX	System Basis Chips (SBCs)	112
TLE9278QX V33	System Basis Chips (SBCs)	112
TLE94003EP	Integrated low-current motor drivers	65
TLE94004EP	Integrated low-current motor drivers	65
TLE94103EP	Integrated low-current motor drivers	65
TLE94104EP	Integrated low-current motor drivers	65
TLE94106EL	Integrated low-current motor drivers	65

Type list	Product family	
TLE94108EL	Integrated low-current motor drivers	65
TLE94110EL	Integrated low-current motor drivers	65
TLE94112EL	Integrated low-current motor drivers	65
TLE9842-2QX	Embedded Power ICs	77
TLE9842QX	Relay driver IC with integrated microcontroller	77
TLE9843-2QX	Embedded Power ICs	77
TLE9843QX	Relay driver IC with integrated microcontroller	77
TLE9844-2QX	Embedded Power ICs	77
TLE9844QX	Relay driver IC with integrated microcontroller	77
TLE9845QX	Relay driver IC with integrated microcontroller	77
TLE9861QXA20	Embedded Power ICs	79
TLE9867QXA20	Embedded Power ICs	79
TLE9867QXA40	Embedded Power Ics	79
TLE9867QXW20	Embedded Power ICs	79
TLE9869QXA20	Embedded Power ICs	79
TLE9871QXA20	Embedded Power ICs	81
TLE9873QXW40	Embedded Power ICs	81
TLE9877QXA20	Embedded Power ICs	81
TLE9877QXA40	Embedded Power ICs	81
TLE9877QXW40	Embedded Power ICs	81
TLE9879-2QXA40	Embedded Power ICs	81
TLE9879QXA20	Embedded Power ICs	81
TLE9879QXA40	Embedded Power ICs	81
TLE9879QXW40	Embedded Power ICs	81
TLF1963	Power supply linear voltage regulators	92
TLF35584	DC-DC converters	99
TLF4277	Power supply linear voltage regulators	93
TLF4277-2	Power supply linear voltage regulators	93
TLF4949	Power supply linear voltage regulators	85
TLF50201	DC-DC converters	94
TLF50211	DC-DC converters	94
TLF50241	DC-DC converters	94
TLF50251	DC-DC converters	94
TLF50281	DC-DC converters	94
TLF51801	DC-DC converters	94
TLF80511	High-performance linear voltage regulators	89
TLS102B0	Trackers	91
TLS105B0	Trackers	91
TLS115B0	Trackers	91
TLS115D0	Trackers	91
TLS202A1	Power supply linear voltage regulators; Post Regulators	92
TLS202B1	Power supply linear voltage regulators; Post Regulators	92
TLS203B0	Power supply linear voltage regulators; Post Regulators	92
TLS205B0	Power supply linear voltage regulators; Post Regulators	92
TLS208D1	Power supply linear post regulators	92
TLS4120D0	DC-DC converters	94
TLS710	Linear voltage regulators	85
TLS715	Linear voltage regulators	85
TLS730	High-performance linear voltage regulators	89
TLS805B1	High-performance voltage regulators	89
TLS805D1	High-performance voltage regulators	89
TLS810A1	High-performance voltage regulators	89
TLS810B1	High-performance voltage regulators	89
TLS810C1	High-performance voltage regulators	89
TLS810D1	High-performance voltage regulators	89
TLS820B2	High-performance linear voltage regulators	89
TLS820D0	High-performance voltage regulators	89
TLS820F0	High-performance voltage regulators	89
TLS820F1	High-performance voltage regulators	89
TLS835B2	High-performance linear voltage regulators	89
TLS835D2	High-performance linear voltage regulators	89
TLS850B0	High-performance voltage regulators	89
TLS850D0	High-performance voltage regulators	89
TLS850F0	High-performance voltage regulators	89
TLS850F1	High-performance voltage regulators	89
TLT807B0	Linear voltage regulators	86

Downloaded from Arrow.com.

Symbols

Symbol	Description
I_D	DC drain current
$I_{L(lim)}$	Load current limit
$I_{L(NOM)}$	Load current (T_A = 85°C, specified PCB)
I_q	Quiescent current
I_Q	Output current
Q_G	Total gate charge
$R_{DS(on)}$	Typical drain source resistance in ON-state @ 25°C (multiply by 2 for max @ 150°C)
$R_{DS(on)}$ path	Typical drain source resistance in ON-state @ 25°C of both high-side and low-side
R_{thJC}	Thermal resistance junction to case
$V_{CE(sat)}$	Saturation collector emitter voltage
V_{DS}	Drain source voltage
$V_{DS(AZ)}$	Drain source voltage (active Zener)
$V_{GS(th)}$	Gate threshold voltage
V_Q	Output voltage
V_S	Supply voltage
$V_{S(OP)}$	Operation supply voltage
Inverse	Normal V_S polarity and Inverse Load current
PWM	Pulse Width Modulation
Reverse	Reverse V_S polarity and reverse load current
V_{GS}	Gate source voltage
Q_g	Total gate charge
Q_{rr}	Reverse recovery charge
C_{oss}	Output capacitance
V_{AC}	Alternate current voltage
V_{Batt}	Battery voltage
I_{Dpuls}	Pulsed drain current
V_{CL}	Clamp voltage
V_{Sense}	Sense voltage
R_{Sense}	Sense resistance
V_I	Input voltage
V_O	Output voltage
V_{Reg}	Voltage regulator
$V_{sat\ path}$	Path saturation voltage
I_{Nom}	Nominal current
E_{AS}	Maximum energy dissipation single pulse
$I_{L\ (SC)}$	Short circuit current
T_j	Junction temperature
R_{ext}	External resistor
V_{en}	Enable voltage
V_S	Supply voltage
P_{tot}	Total power dissipation

Downloaded from Arrow.com.

Symbol	Description
$I_{L\ (LIM)\text{-}Trigger}$	Load current limitation trigger
$V_{ce(on)}$	Collector-emitter on voltage
V_{ces}	Collector-emitter saturation voltage
I_c	Collector current
T_{sc}	Short circuit temperature
E_{on}	Turn on energy
E_{off}	Turn off energy
V_f	Forward voltage
V_{DD}	Supply voltage
C_{mod}	Module input capacitance
C_{VS}	Supply voltage capacitance
V_{IN}	Input voltage
V_{OUT}	Output voltage
$R_{pullup1}$	Pullup resistor
$R_{pullup2}$	Pullpup resistor
C_Q	Output capacitor
C_D	Delay capacitor
R_Q	Output resistor
V_{CC}	Supply voltage
$I_{D(lim)}$	Limitation current
V_{DDEXT}	External supply
C_I	Input capacitor
I_{OUT}	Output current
V_{REF}	Reference voltage
V_{RMS}	RMS voltage
V_{Adj}	Adjustment voltage
V_{in}	Input voltage
f_{sw}	Switching frequency
V_{Ref}	Reference voltage
V_{StBy}	Stand-by voltage
$V_{\mu C}$	Microcontroller voltage
V_{IO}	Input output voltage
V_{reg}	Voltage regulator
I_{LIM}	Limitation current

Downloaded from Arrow.com.

Infineon's next level of Zero Defect program

On the way to Zero Defect products and services

The most valuable aspect of cars is the people they carry. Therefore, safety should never be compromised. This is the most important consideration for everybody involved in making automobiles – from the smallest suppliers to the manufacturers themselves. As car components become more and more complex, and as the number of control units in vehicles increases, the likelihood of a product failure becomes bigger. Quality performance is a key differentiator for automotive market success. Our target of Zero Defect means:

- No quality events and no deviations
- Defect-free product launches
- All processes are under control
- Highest quality image in the market and more business due to satisfied customers
- Enable our customers a faster time-to-market

No compromise when it comes to quality

Infineon established the most comprehensive quality program called "AUTOMOTIVE EXCELLENCE" in the semiconductor industry in 2003. The continuation of the successful "Automotive Excellence" program is "NEXT LEVEL of ZERO DEFECT" started in 2011. The program is founded on four pillars: people, products, processes and production. Due to our "no compromise" policy in all four pillars our program really works. Our employees truly live the credos of Zero Defect, considering the highest quality requirements and understanding the importance of prevention. They are trained to deeply understand the tools and methods used to avoid deviations and to solve problems by addressing both technical and systemic root causes.

On the way to zero defect products

On the way to zero defect products, some examples:

- The 'Green Line' project focuses on highest stability in assembly and test fabs
- Zero Defect Culture initiatives and principles intensify the Zero Defect mindset of both staff and management
- Quality firewall project "ensures highest outgoing product quality by intelligent outlier screening"
- Extend "Next level of Zero Defect" into supplier base

"Next level of Zero Defect" is your competitive advantage

Many of our partners have expressed their satisfaction with the quality of our products and the way we execute "Next level of Zero Defect".

- "Bosch Global Supplier Award" received for the sixth time in 2017. With the award, the Bosch Group honors outstanding performance in the manufacture and supply of products or services - notably in the areas of quality, innovation and logistics.
- "Denso Supplier Award of the Year", received in 2017. The award is given to the supplier who demonstrates commitment to exceptional quality and logistics performance.
- "Toyota Best Quality Award", received in 2017. The manufacturer acknowledges Infineon for outstanding quality.
- Quality Awards from Toyota's Hirose plant in 2004, 2006, 2007, 2008, 2009, 2010, 2011, 2015 and 2016.
- Hitachi Automotive Systems "Best Partner Award", received in 2016
- Hitachi North America "Development Excellence Award", received in 2016. This award recognizes Infineon's premium service provided, especially during new project development.

Downloaded from Arrow.com.



Downloaded from Arrow.com.

Infineon packages[1)]

DSO-8 	DSO-8 EP 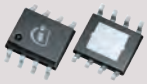	DSO-12 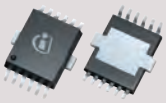	DSO-14 	DSO-14 EP 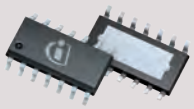	DSO-20 
DSO-20 EP 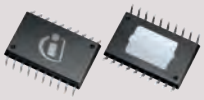	DSO-20 (Heatslug) 	DSO-20 (Power-SO) 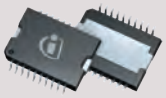	DSO-24 	DSO-28 	DSO-36 
DSO-36 (Dual gauge) 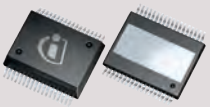	DSO-36 EP 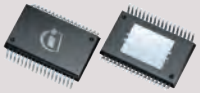	DSO-36 (Power-SO) 	DSO-52 	HSOF-8 (HPSOF-8) TOLL (TO-Leadless) 	LQFP-64 
LQFP-100 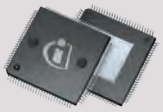	MQFP-64 (Power) 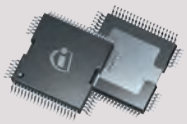	SC59 	SC74 TSOP-6/6 dual 	SCT595-5 	SOT23 
SOT89 	SOT223 	SOT323 	SOT343 	SOT363/dual 	SSOP-14 EP 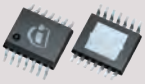
SSOP-16 	SSOP-24 	SSOP-24 EP 	TDSO-8 EP 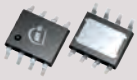	TDSON-8-4 SuperSO8 dual 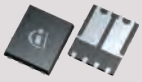	TDSON-8-10 SuperSO8 dual 

1) For further information on Infineon packages, please visit our internet site at www.infineon.com/packages

Downloaded from Arrow.com.

TDSON-8-33/34 SuperSO8 single 	TO252-3 (DPAK) 	TO252-5 (DPAK 5-leg) 	TO263-3 (D^2PAK) 	TO263-3-2 	TO263-5 (D^2PAK 5-leg) 
TO263-5-2 	TO263-7 (D^2PAK 7-leg) 	TO263-7-3 	TQFP-48 EP 	TSDSO-14 	TSDSO-14 EP 
TSDSO-24 	TSDSO-24 EP 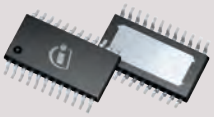	TSDSON-8 	TSON-8 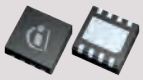	TSON-10 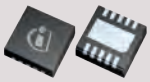	TSON-14 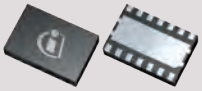
TSSOP-14 	VQFN-48 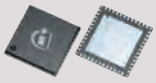	TO220-3 	TO220-5-11 	TO220-5-12 	TO220-7-11 
TO220-7-12 	TO247-3 	TO262-3 			

1) For further information on Infineon packages, please visit our internet site at www.infineon.com/packages

Downloaded from Arrow.com.

Former IR packages[1)]

Valid for former IR products and product types starting with AU… or AI…

DirectFET™2 L6 	DirectFET™2 L8 	DirectFET™2 M2 	DirectFET™2 M4 	DirectFET™2 SB 	DirectFET™2 SC 
DSO-28 (28 lead SOIC) 	PQFN 5x6 mm 	PQFN 5x6 dual 	SO-8 (DSO-8) 	SO-14 NB (14 lead SOIC) 	SO-16 NB (16 lead SOIC) 
SO-16 WB (16 lead SOIC) 	SOT-223 	TO-252 (DPAK 3-leg) 	TO-252 (DPAK 5-leg) 	TO-263-3 (D^2PAK 3-leg) 	TO-263-5 (D^2PAK 5-leg) 
TO-263-7 (D^2PAK 7-leg) 	IPAK 	Super TO-220 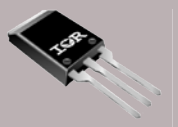	Super TO-247 	TO-220 	TO-220 FullPak 
TO-247 	TO-262 	TO-262 WideLead 	TO-263CA 7 pin 		

1) For further information, please visit our internet site at www.infineon.com/packages

Downloaded from Arrow.com.

Infineon Power Modules

HybridPACK™ 1 	HybridPACK™ Light 	HybridPACK™ 2 Enhanced 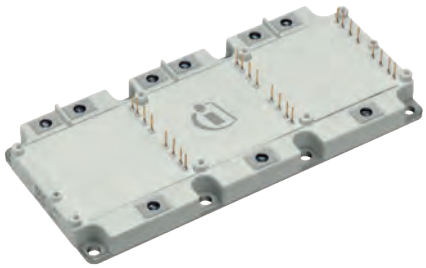
HybridPACK™ Drive 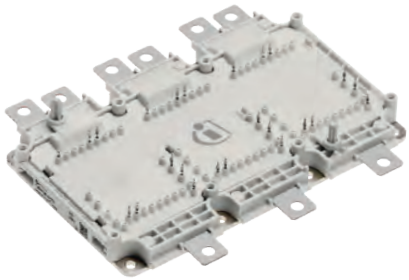	HybridPACK™ DSC L 	HybridPACK™ DSC S 
Automotive Easy 1B 	Automotive Easy 2B 	

Downloaded from Arrow.com.

Where to buy

Infineon distribution partners and sales offices:
www.infineon.com/WhereToBuy

Service hotline

Infineon offers its toll-free 0800/4001 service hotline as one central number, available 24/7 in English, Mandarin and German.

- Germany ..... 0800 951 951 951 (German/English)
- China, mainland ..... 4001 200 951 (Mandarin/English)
- India ..... 000 800 4402 951 (English)
- USA ..... 1-866 951 9519 (English/German)
- Other countries ..... 00* 800 951 951 951 (English/German)
- Direct access ..... +49 89 234-0 (interconnection fee, German/English)

* Please note: Some countries may require you to dial a code other than "00" to access this international number.
Please visit www.infineon.com/service for your country!



Mobile product catalog

Mobile app for iOS and Android.

www.infineon.com

Published by
Infineon Technologies AG
81726 Munich, Germany

© 2017 Infineon Technologies AG.
All rights reserved.

Order number: B124-I0026-V4-7600-EU-EC-P
Date: 10 / 2017

Please note!
THIS DOCUMENT IS FOR INFORMATION PURPOSES ONLY AND ANY INFORMATION GIVEN HEREIN SHALL IN NO EVENT BE REGARDED AS A WARRANTY, GUARANTEE OR DESCRIPTION OF ANY FUNCTIONALITY, CONDITIONS AND/OR QUALITY OF OUR PRODUCTS OR ANY SUITABILITY FOR A PARTICULAR PURPOSE. WITH REGARD TO THE TECHNICAL SPECIFICATIONS OF OUR PRODUCTS, WE KINDLY ASK YOU TO REFER TO THE RELEVANT PRODUCT DATA SHEETS PROVIDED BY US. OUR CUSTOMERS AND THEIR TECHNICAL DEPARTMENTS ARE REQUIRED TO EVALUATE THE SUITABILITY OF OUR PRODUCTS FOR THE INTENDED APPLICATION.

WE RESERVE THE RIGHT TO CHANGE THIS DOCUMENT AND/OR THE INFORMATION GIVEN HEREIN AT ANY TIME.

Additional information
For further information on technologies, our products, the application of our products, delivery terms and conditions and/or prices, please contact your nearest Infineon Technologies office (www.infineon.com).

Warnings
Due to technical requirements, our products may contain dangerous substances. For information on the types in question, please contact your nearest Infineon Technologies office.

Except as otherwise explicitly approved by us in a written document signed by authorized representatives of Infineon Technologies, our products may not be used in any life-endangering applications, including but not limited to medical, nuclear, military, life-critical or any other applications where a failure of the product or any consequences of the use thereof can result in personal injury.

Downloaded from Arrow.com.