Emhart Teknologies
TUCKER™

Assembly Instructions

Stud Welding Gun

PLM 200

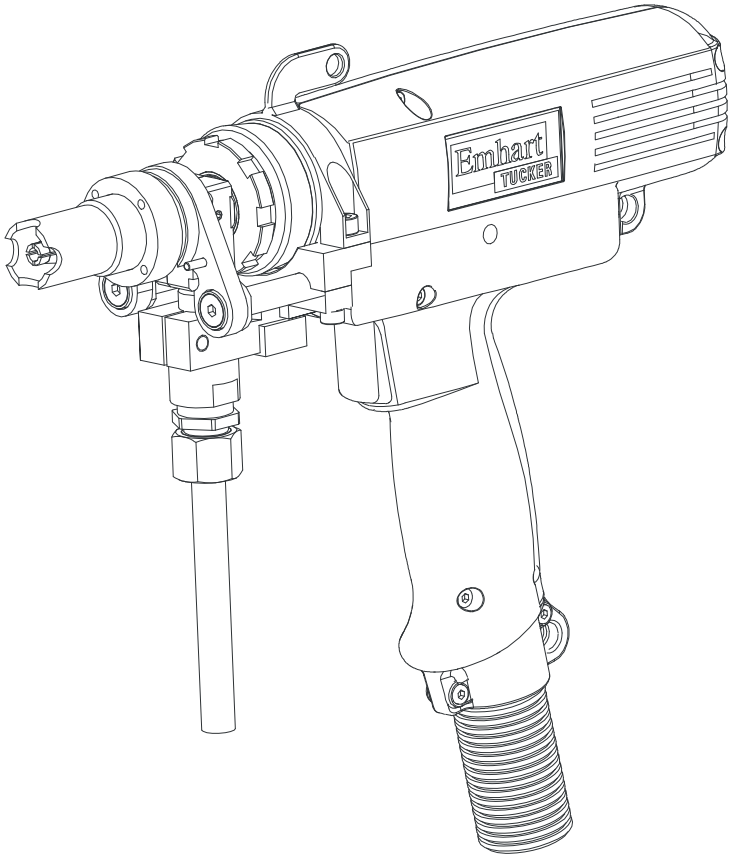

Please read the assembly instructions before any operation!

© Emhart Teknologies TUCKER GmbH

Max-Eyth-Straße 1

D-35394 Gießen

Tel.: +49 (0) 641 405 0

Fax: +49 (0) 641 405-383

E-Mail: Info@tucker.de

Internet: www.tucker.de

Translation of the original assembly instructions MTA PLM200 02/10

Table of Contents:

1. General Information 5
1.1 Information Regarding the Assembly Instructions 5
1.2 Limitation of Liability 5
1.3 Symbol Legend 6
1.4 Copyright Protection 7
1.5 Replacement Parts 7
1.6 Guarantee Instructions 8
1.7 After Sales Service 8
1.8 Remark to the Declaration of Incorporation 8
2 Safety 9
2.1 Responsibility of the Operating Company 9
2.2 Personnel Requisition 10
2.2.1 Qualification 10
2.2.2 Trespassers 11
2.2.3 Instruction 11
2.3 Intended Use 12
2.4 Personal Protective Equipment 13
2.5 Special Risks 14
2.6 Safety Installations 15
3 Technical Data 16
3.1 General Specifications 16
3.2 Connected Loads 16
3.3 Accessories 16
3.4 Dimensioned Drawing 17
3.5 Type Plate 18
4 Preface: Stud Welding 19
5 General Description 20
6 Connection and Installation 21
6.1 Overview PLM 200 21
6.2 Connection of the Cable Package 22
6.3 Layout of a Welding Installation 23
7 Adjustments 24
7.1 Adjusting the Stud Firing Angle 24
7.2 Adjusting the Stud Firing Channel 25
7.3 Adjusting the Safety Clearance to the Collet 26
7.4 Adjusting the Loading Pin Speed 27
7.5 Software-Angle Switch 28
7.6 Program Selector Switch (Option) 33

8 Verification of Feed Tube Locking 34
9 Verification of the Auto-Reload Function 35
10 Stud Welding Instructions 36
10.1 Before the Weld Start 36
10.2 Course of the Process on Stud Welding 37
10.3 Operation with Protective Gas 38
11 Transport, Packaging and Storing 39
11.1 Safety Instructions for the Transport 39
11.2 Transport Check 39
11.3 Packaging 40
11.4 Storing 40
12 Maintenance and Cleaning 41
12.1 Safety 41
12.2 Maintenance Schedule 41
12.3 Maintenance Work 43
12.3.1 Replacing the flashshield 43
12.3.2 Replacing the Collet 44
12.3.3 Replacing the Dirt Protection Cover 44
12.3.4 Replacing the Load Pin 44
12.3.5 Replacing the Coupling Plate 44
12.3.6 Replacing the Receiver 45
12.3.7 Replacing the Clamping Ring 45
13 Exploded Views 46
13.1 Kit Receiver 46
13.2 Kit Housing 47
13.3 Kit Handle 48
14 Refitting the PLM 200 49
15 Disposal 50

Appendix: Declaration of Incorporation

1. General Information

1.1 Information Regarding the Assembly Instructions

These instructions permit the secure and efficient handling with the device. The instruction is a component of the device and has to be stored accessibly for the personal at any time and in the immediate vicinity of the device. These instructions have to be read carefully and to be understood by the personal before any kind of operation. The compliance with all indicates safety instructions and the instructions how to act in these instructions is a precondition for a safe operation.

Furthermore the local accident prevention regulations and the general safety regulations effective for the application area of the device have to be observed.
Figures in these instructions provide a basic understanding and may differ from the actual design of the device.

1.2 Limitation of Liability

All instructions and information in these assembly instructions have been compiled in consideration of the valid standards and regulations, the state of the art as well as our experience of many years.

The manufacturer assumes no liability for damages due to:

- Non-observance of the assembly instructions.
- Not intended use.
- Employment of unskilled personnel.
- Arbitrary rebuilding.
- Technical modifications.
- Use of non-licensed replacement parts.

On special design, on demands of additional order options or due to latest technical modifications the actual shipment may differ from the explanations and expositions described here.

Effective are the obligations agreed in the supply contract, the general terms and conditions as well as the delivery conditions of the supplier and the legal regulations valid to the time of conclusion of the contract.

Technical modifications within the improvement of the usage properties and the further development are reserved.

1.3 Symbol Legend

Warning notices

The warning notices in this operation manual are indicated by symbols. The notes commence with a signal word which expresses the extent of the danger.

Observe the notes and act with caution to avoid accidents and damage to persons and property.



DANGER!

… points to a directly dangerous situation which can lead to death or severe injuries if it is not avoided.



WARNING!

… points to a possibly dangerous situation which can lead to death or severe injuries if it is not avoided.



CAUTION!

… points to a possibly dangerous situation which can lead to slight injuries if it is not avoided.

!

CAUTION!

…points to a possibly dangerous situation which can lead to damage of property if it is not avoided.

Tips and recommendations



NOTE!

… highlights useful tips and recommendations as well as information for an efficient and failure-free operation.

Special security advisories

In order to draw attention to special dangers, the following symbols are used in connection with security advisories:

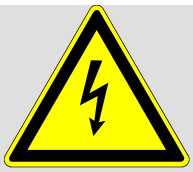

DANGER!
Danger to life by electric current!
… indicates perilous situations by electric current. Disregarding of the security advisories can lead to severe injuries or death.
The operations which need to be carried out may only be executed by electronic technicians.

1.4 Copyright Protection

This instruction is protected by copyright and only intended for internal purposes.

The provision of the instruction to a third party, duplications in all kinds and forms - also in extracts - as well as the utilisation and/or communication of the content are, aside from internal purposes, not permitted without a written authorization of the manufacturer.
Non-compliances obligate to damages. Further claims remain reserved.

1.5 Replacement Parts



WARNING!
Safety risk due to false replacement parts!
False or defective replacement parts can affect the safety as well as lead to damages, malfunctions or total breakdown.
Therefore:
- Use original TUCKER replacement parts.

Purchase replacement parts via licensed dealer or directly at manufacturer. Address see page 2.

1.6 Guarantee Instructions

For material and manufacturing faults, the guarantee period for this welding gun amounts to 1 year from delivery date on. Excluded from this is damage that is caused by accident or by incorrect handling.

The guarantee covers free-of-charge replacement of the faulty component. In this connection, liability for consequential damage is excluded.

Guarantee void in case of attempts to repair by personnel that has not been trained by the manufacturer and/or when using spare parts that TUCKER has not approved of. In the event of a defect the non-conforming appliance must be sent to the next TUCKER agent or directly to the manufacturer.

The guarantee claim lapses when attempts at repair are carried out by unauthorised or unqualified persons. In the event of a defect the non-conforming appliance must be sent to the next TUCKER agent or directly to the manufacturer. For further information concerning national representation, our customer service is at your disposal. The corresponding contact data can be found on page 2.

1.7 After Sales Service

Our service department is available for technical support.

Information about the responsible contact person is available via telephone, fax, E-Mail or anytime via the Internet, please see manufacturer address on page 2.

Furthermore, our employees are constantly interested in new information and experiences that result from the single applications and could be helpful for improving our products.

1.8 Remark to the Declaration of Incorporation

Note!
A declaration of incorporation for the inc of an incomplete machine with the corresponding details according to the EC machinery directive 2006/42/EG, appendix II, paragraph B is attached to the documents.

2 Safety

This paragraph gives a review about all important safety aspects for an optimal protect of the personnel as well as for the safe and failure-free operation.

Disregard of the operating instructions and security advices mentioned in this manual could lead to serious dangers.

2.1 Responsibility of the Operating Company

The welding gun is used industrially. Therefore the operating company of the unit is liable to the legal obligations of operational safety.

In addition to the operational safety advisories in this assembly instructions the safety-, accident prevention- and environmental regulations in force for the area of application need to be observed.

Please consider particularly the following:

- The operating company has to inform himself about the valid industrial safety regulations and determine additional dangers in an assessment of hazards which occur by the special working conditions on the site of the device. He has to implement these for the operation of the control unit in the form of operating instructions.
- The operating company has to verify that the operating instructions are state of the art during the complete operating time of the unit. If necessary, the operating company is to adjust the operating instructions to the valid rules and regulations.
- The operating company has to manage and determine the responsibilities for installation, operation, maintenance and cleaning in an explicit manner.
- The operating company has to ensure that all employees dealing with the unit have read and understood this manual. Moreover, the operating company has to train the operating personnel in regular intervals and has to provide information on possible dangers.
- The operating company has to provide the personnel with the required protective equipment.

2.2 Personnel Requisition

2.2.1 Qualification



WARNING!
Risk of injury on insufficient qualification!
Improper handling can lead to serious damage to persons and property.
Therefore:
- All activities are to be carried out by skilled personnel only!

The following qualifications for different areas of operations are named in the assembly instructions:

- **Instructed person**

  Has been informed about the tasks assigned and possible dangers of improper execution of an instruction by the operating company.

- **Qualified personnel**

  Qualified personnel are able to carry out the assigned tasks due to their qualified training, knowledge and job experience. In addition, the personnel are able to recognize and avoid possible dangers on their own.

- **Electrician**

  The electrician is able to carry out activities on electric units due to his qualified training, knowledge and job experience. In addition, he is able to recognize and avoid possible dangers on his own.
  The electrician has been trained for the special site he is working on and knows about the relevant rules and regulations.

Only persons who can be expected to carry out their work in a reliable manner can be accepted as personnel. Persons whose reactivity is influenced, e.g. by drugs, alcohol or medicaments, are not admitted.

- Please consider the regulations at site specific to age and profession when choosing personnel!

2.2.2 Trespassers



WARNING!
Danger for trespassers!
Trespassers who do not fulfil the requirements mentioned in this document do not know about the dangers of this working area.
Therefore:

- Keep trespassers away from the working area.
- When in doubt, approach persons and banish them from the working area.
- Interrupt your work as long as there are trespassers within the working area.

2.2.3 Instruction

The personnel have to be instructed regularly by the operating company. For a better traceability the implementation of the instruction should be recorded.

Date	Name	Kind of instruction	Instruction carried out by	Signature

2.3 Intended Use

The stud welding gun was designed exclusively for the intended use mentioned in this manual.

The PLM 200 stud welding gun was exclusively designed for drawn arc stud welding of TUCKER studs and only for application in premises. The stud welding gun is used in industrial areas.

Intended use also includes observing all the symbols and information in the assembly instructions.

Any excess of the intended use or different use of the device is considered as misuse and can lead to dangerous situations.



WARNING!

Risk by not intended use!

Every not intended use and/or different use can lead to dangerous situations.

Especially refrain the following use of the device:

- Use with control and power units and stud feeding units of other manufacturers.
- Use of improper weld studs.
- Use in explosive areas.
- Use in damp locations.

Claims of any kind because of damages due to not intended use are excluded.

An electro-magnetically interference-free operation of the stud welding gun can be guaranteed by complying with the specifications in chapter 6 "Connection and installation"!

2.4 Personal Protective Equipment

At work wearing personal protective equipment is essential to minimize the risks for the health.

- During working time always wear the required protective equipment for the respective work.
- Observe the signs regarding the personal protective equipment which exist in the working area.

Strictly to wear Strictly to wear during all operations



Protective glasses

For the protection of the eyes from foreign bodies.

Wear on welding



Protective glasses for welding of protective level 3

For the protection of the eyes from UV-A/B/C radiation and weld splatters.



Protective clothing

is close-fitting work wear with low tear strength, with tight-fitting sleeves and without flared parts. It is principally used to protect against capture by moving machinery parts. Do not wear rings, necklaces and other jewellery.



Hardhat

A hardhat is to be worn when welding overhead for the protection of falling weld splatters.



Gloves

For the protection of the hands from UV-radiation and weld splatters.

2.5 Special Risks

The residual risks which arise from the hazard analysis are described in the following chapter.
Please consider the below mentioned security advices and warnings in the following chapters of this manual to reduce health hazards and to avoid dangerous situations.

Electric current

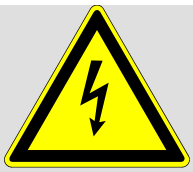

DANGER!
Danger of life by electric current!
Contact with components under current is perilous. Damage of the electrical isolation or of several components can be perilous.
Therefore:

- On damages of the isolation cut-off immediately the power supply and induce repairing.
- Work on the electric installation may only be executed by specialists for electronics.
- Do not connect or disconnect the live plug connector.
- During all work on the electric installation you have to switch it death and test if it is zero potential.
- The collet is electrified during welding and therefore may not be touched.
- For maintenance work and repair operations disconnect the welding gun from the feeder

Moved components



WARNING!
Risk of injury by moving components!
Rotating and/or linearly moving components can cause severe injuries.
Therefore:

- Do not grasp or handle moving components while in operation.
- No not open coverings while in operation.
- Consider the follow-up time.
  Before opening the covers ensure that parts do not move anymore.

Pneumatic



WARNING!
Risk of injury by pneumatic energy!
Pneumatic energies could cause heaviest injuries.
Pneumatically driven parts could move unexpectedly.
Damage of several components air can discharge under high pressure and cause severe injuries e.g. the eyes.
Therefore:

- Wear protective glasses.
- Exclusively use clean and oil-free air.
- Interrupt the compressed air supply to the weld gun for the duration of adjustments.
- Before start-up test the supply lines for proper condition.
- The feed tube locking function of the weld gun may never be by-passed.
- Before start of work check the protective gas installation as well as the connections and the hose lines.
- Basically arrange the maintenance and adjustment work with the personnel of the installation.



Under no circumstances are persons using a cardiac pacemaker to operate or remain in the vicinity of stud welding machines.

2.6 Safety Installations

The PLM 200 stud welding gun is designed for the application within an installation. It has no autonomous emergency-stop-function.

3 Technical Data

3.1 General Specifications

	Angabe	Wert	Einheit
	Weight complete	appr. 5,8	kg
	Length, according to flashshield	appr. 330	mm
	Width	appr. 75	mm
	Height	appr. 240	mm
	System of protection: Protected against solid objects until ø 12 mm.	IP 21 following IEC529	Protected against water drops
	Operating temperature	15 - 40	°C
	Stocking temperature	-25 - 55	°C
	Relative humidity of air, not condensated	5 - 95	%
	Working position	Indefinite	
Noise emission	Sound pressure level	< 75	dB (A)
Vibration value	Effective acceleration value	< 2,5	m/s^2

3.2 Connected Loads

Electrical	**Angabe**	**Wert**	**Einheit**
	Control voltage	24/140	V DC
	Current consumption, max.	2,5	A
Pneumatically	Operating pressure	4 to 8	Bar
	Control voltage	24/140	V DC

3.3 Accessories

Specification	Order number
Socket wrench for swivel nut	M110 014
Adjust gauge welding lift	M111 012
Suspension horizontal	M181 414

3.4 Dimensioned Drawing

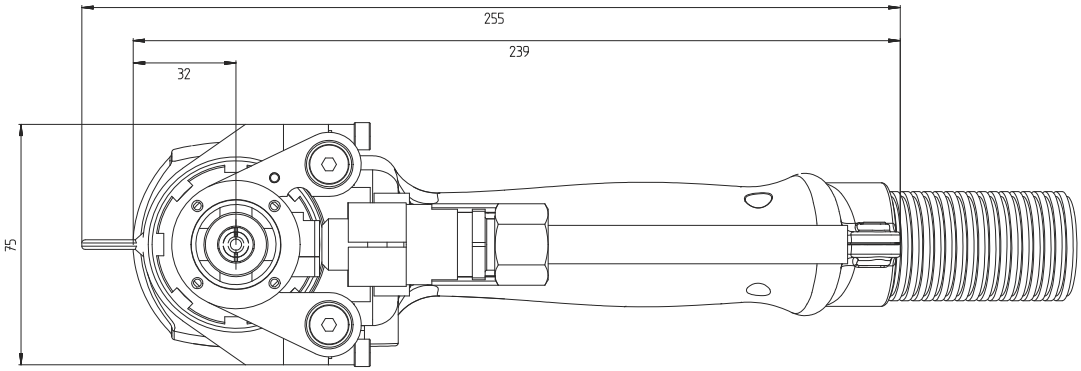

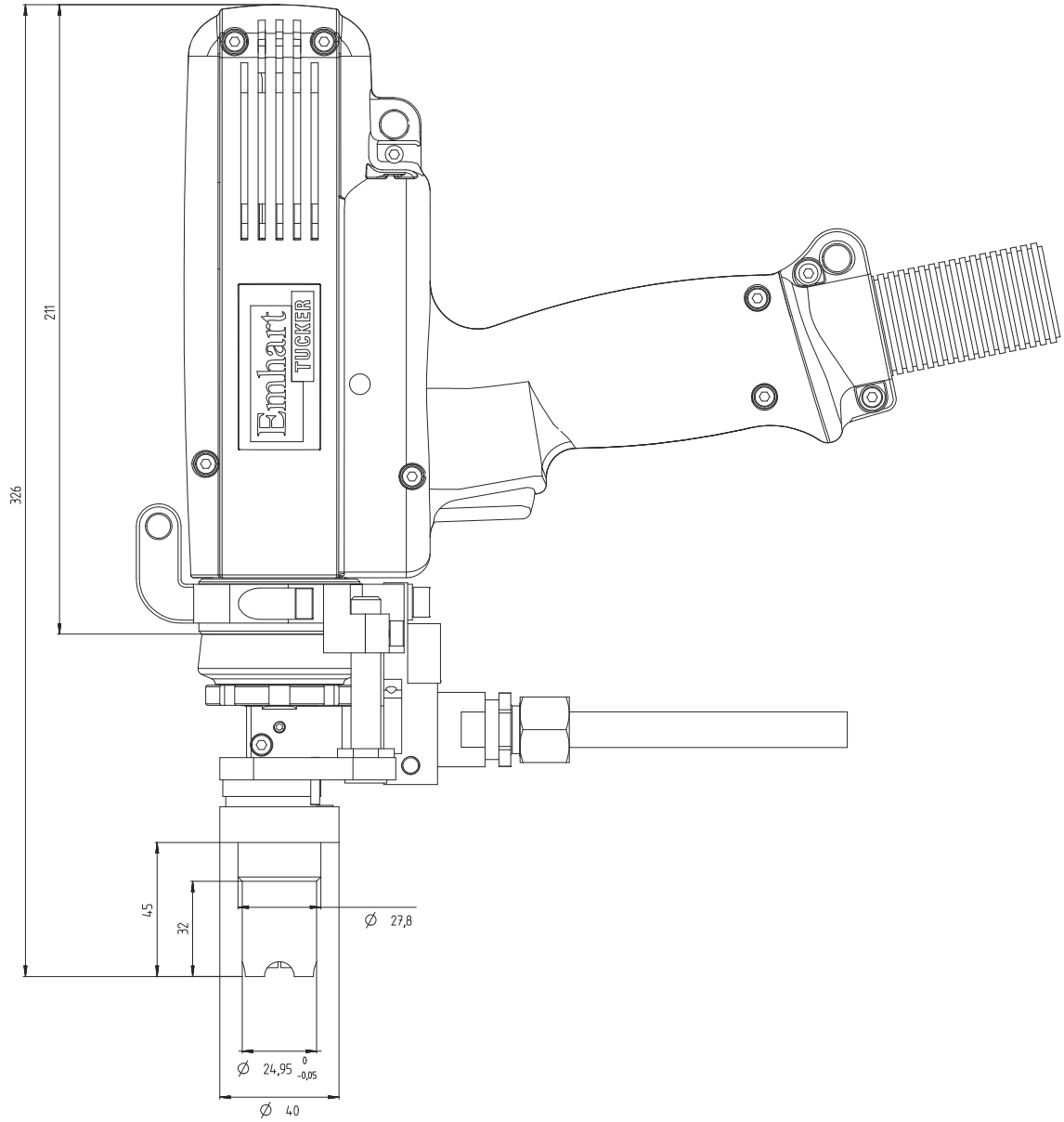

3.5 Type Plate



The type plate is located on the gun housing and contains the following information

- Manufacturer
- Part number
- Type description
- Serial number

4 Preface: Stud Welding

In almost all technological disciplines where continuous metal work surface fastenings are required, light arc stud welding has become more and more important.

Decisive factors in the growing acceptance of light arc stud welding are the wide range of possible applications and the increasing demand for efficiency and rationalization in today's business environment.

TUCKER has chosen to perform light arc welding using a drawn arc welding ignition mechanism.

This technology offers highly repeatable piece-to-piece accuracy, works quietly and achieves a consistently high quality level.

Reliability and process safety are the hallmarks of the welding process, which essentially consists of stud movement combined with synchronous welding current.

The precise adjustment of these process elements guarantee the quality and reproduce ability of TUCKER unit welding results in automated, in semi-automated and also in manual operation.

5 General Description

The PLM 200 represents a further development of the weld head technology, which is well proven in the difficult welding environment, i.e. the advantages of a weld head were combined with the flexibility of a weld gun.

Furthermore the PLM 200 was equipped with a maintenance-free, cylindrical slide bearing. This is mainly important for welds where exact control of the mechanical weld parameters is required. The PLM is equipped with a linear motor, with which the plunge movement of the stud can be specified precisely. The weld results, particularly with aluminium, are improved as a result.

The stud movement of the PLM 200 is monitored through a distance measuring system, which is able to measure exactly the stud lift as well as the plunge depth of the stud into the liquid melt.

In connection with a control and power unit and a stud feeder the PLM 200 weld gun is able to weld all TUCKER weld stud types using a short term drawn arc welding.

In order to protect the weld zone against oxygen influences from the outside the PLM 200 has a protective gas flash shield. This feature improves the quality of welding for all studs especially for aluminium studs.

The PLM 200 has a light emitting diode via which the user can verify the right-angle approach of the gun before issuing the start command, to assure that the studs are always welded at a right angle onto the work surface.

For safety reasons of the operating personnel the feed tube connection of the weld gun is equipped with a locking switch so that the feeding cycle will be interrupted immediately as soon as the feed tube is loose.

The PLM 200 can be fitted with an optional locking kit to increase process safety. The gun is locked in a position bushing by a bellows cylinder, which prevents lifting off in a welding process (This option is only applicable when using a welding template).

In order to minimize fatigue while working with the weld gun, the PLM 200 should be mounted to a counterweight-rewinding during operation. The corresponding holding device on the backside is already provided for. A mounting for horizontal welding processes can be retrofitted.

The quick-coupling system of the electrical and pneumatic supply cables allows a fast and simple replacement of the weld gun during different welding operations or during refitting.

6 Connection and Installation

6.1 Overview PLM 200

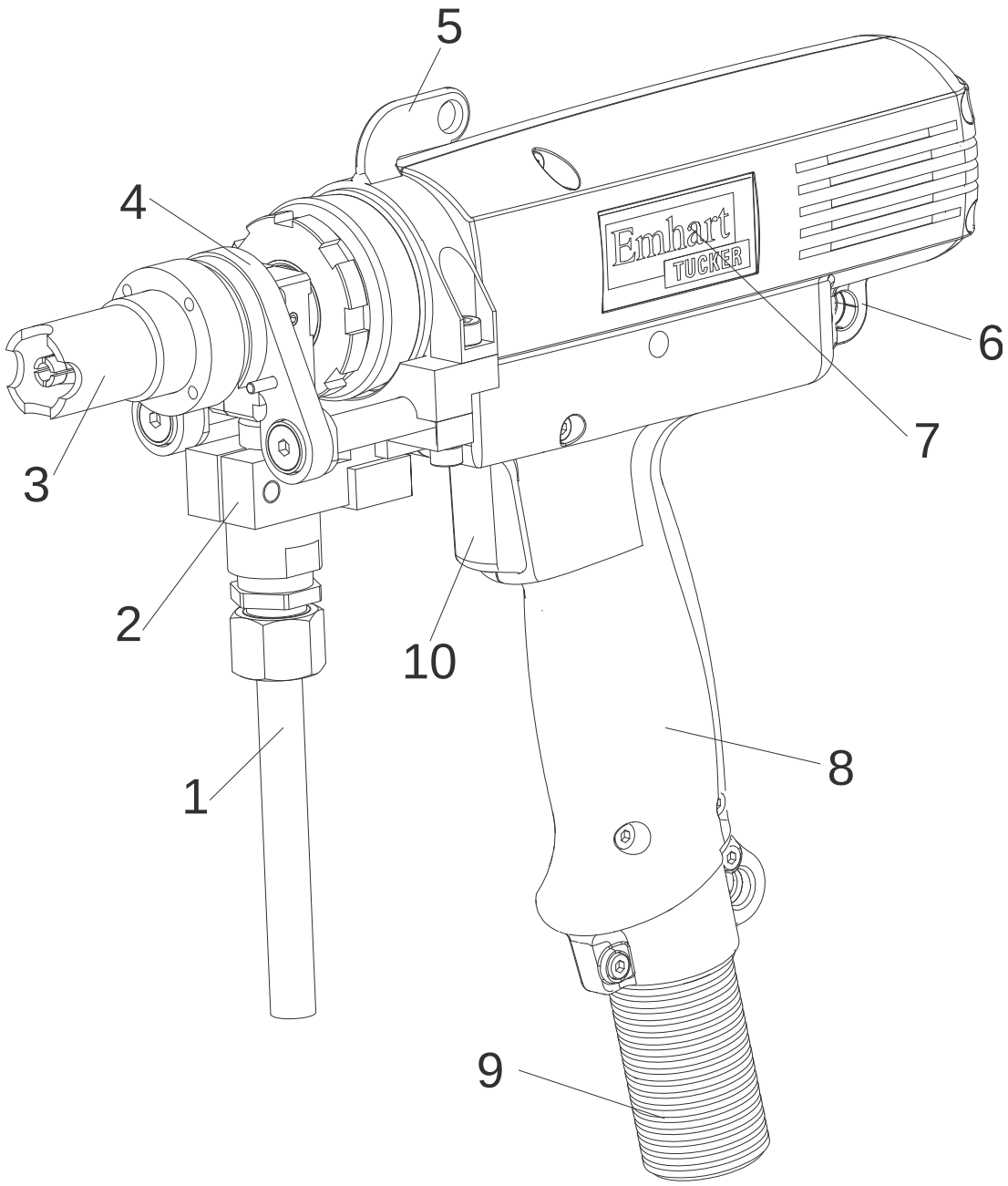

1. Feeding tube
2. Coupling plate
3. Flashshield
4. Flashshield support
5. Suspension horizontal (option)
6. Suspension vertical (standard)
7. Type plate
8. Gun handle left
9. Corrugated tube package
10. Start button

6.2 Connection of the Cable Package

NOTE!
The stud feeding tube is not included in delivery of the PLM 200 and has to be ordered separately.

The PLM 200 is delivered in consideration of the requested stud type. The stud type is noted on the type plate of the gun.

The welding gun can be connected, adjusted and checked with the information in the following chapters.

- The electrical and pneumatically connection lines of the cable package are already mounted securely on the PLM 200 and will be connected to the stud feeder with the multi coupling plug.
- The stud feeding tube is affixed in the coupling plate of the welding gun and connected to the stud feeder according layout 6.3.
- On PLM 200 version with protective gas the protective gas to use has to be selected customer specificly.

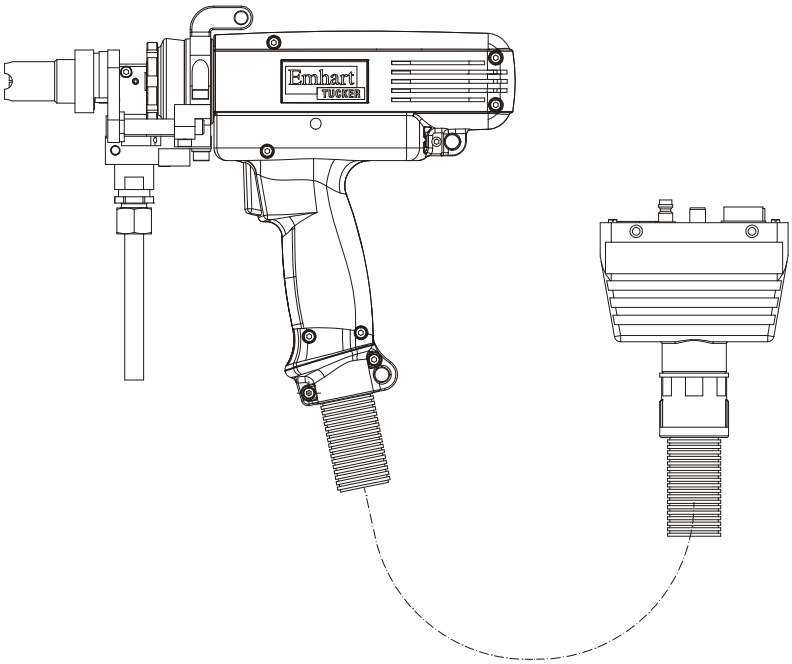

NOTE!
Pass the connection lines according to the layout in chapter 6.3 and pass the welding and ground cables in their complete length to avoid inductive bypasses and line breaks!

6.3 Layout of a Welding Installation

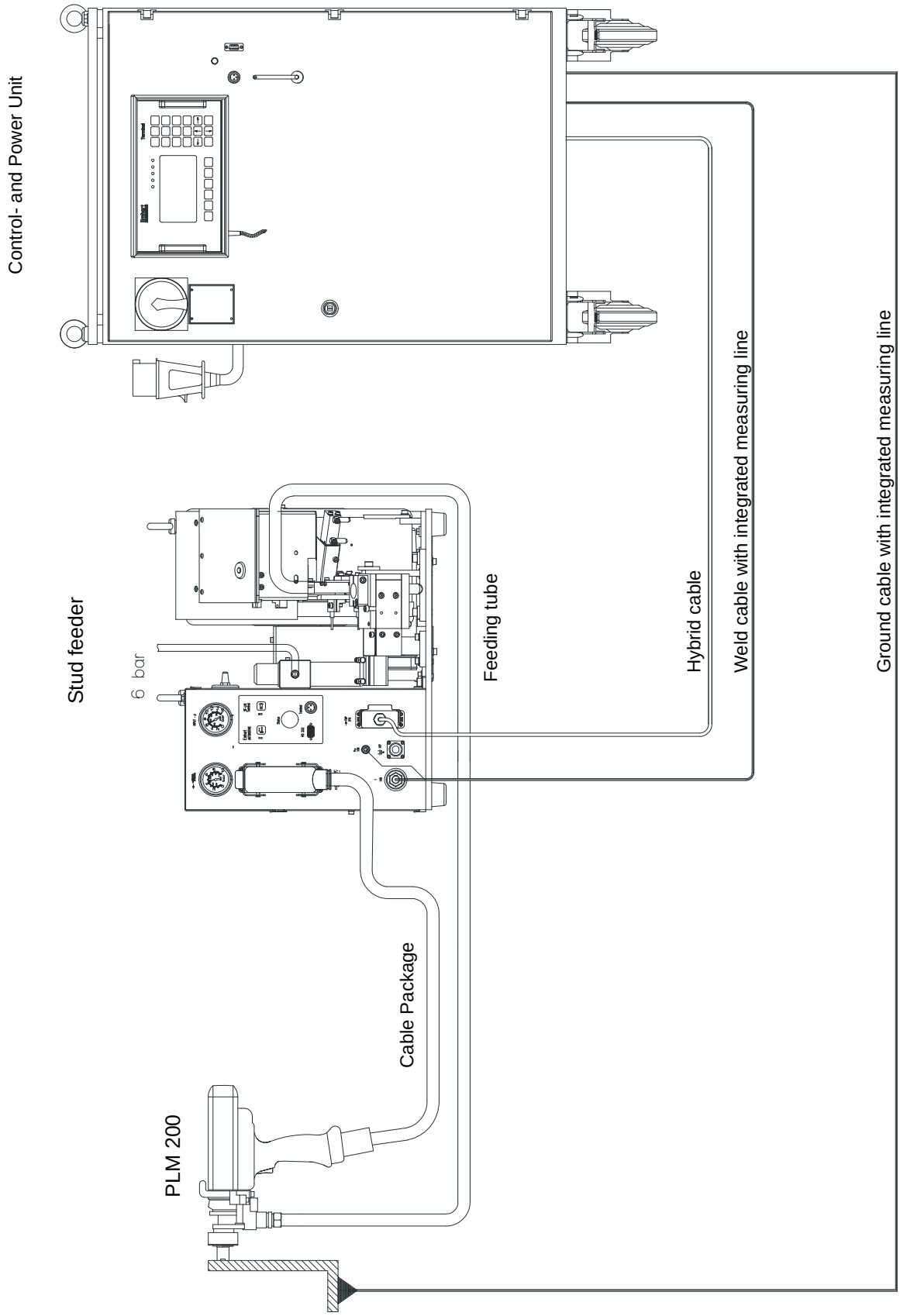

7 Adjustments

7.1 Adjusting the Stud Firing Angle

In order to enable a clearance-free positioning of the feeding tube, the stud firing angle might have to be adjusted subsequently.
For that purpose the pivoting receiver has to be adjusted in that way, that the stud-firing angle corresponds with the position of the feeding tube.

The adjustments have to be carried out considering the following order.

1. Release the M 6 fillister head screw on the coupling plate and then remove the stud feeding tube from the coupling plate.
2. Release the clamping ring with the sickle spanner M 110 101 and position the receiver according to feeding tube position.

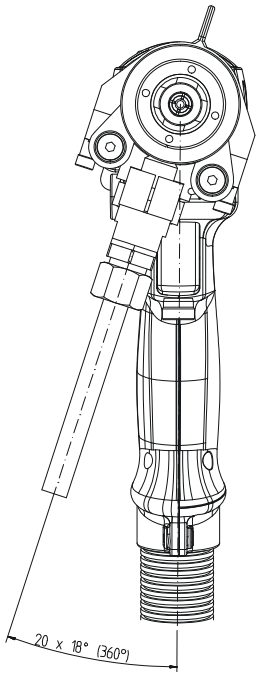

3. Always observe that the receiver locks with its locating pin in one of the 20 x 18° - sectors.
4. Having positioned the receiver retighten the clamping ring with the sickle spanner.
5. If the clamping ring is not tightened unacceptable light arcs between clamping ring and connection flange may occur.

Remark: The torsional possibilities may, under some circumstances, be limited by the length of the air tube and the lines of the locking switch.

NOTE!
After each position change of the stud-firing angle the stud firing channel must be verified with a gauge. The adjustment procedure is described in chapter 7.3.

7.2 Adjusting the Stud Firing Channel

Modification of the firing angle as well as replacement of the coupling plate require a correction of the firing channel in order to guarantee the unhindered firing of the stud from the feed tube into the receiver.
The adjustment of the stud-firing channel has to be carried out with a stud-specific setting gauge. The adjustments have to be carried out considering the following order.

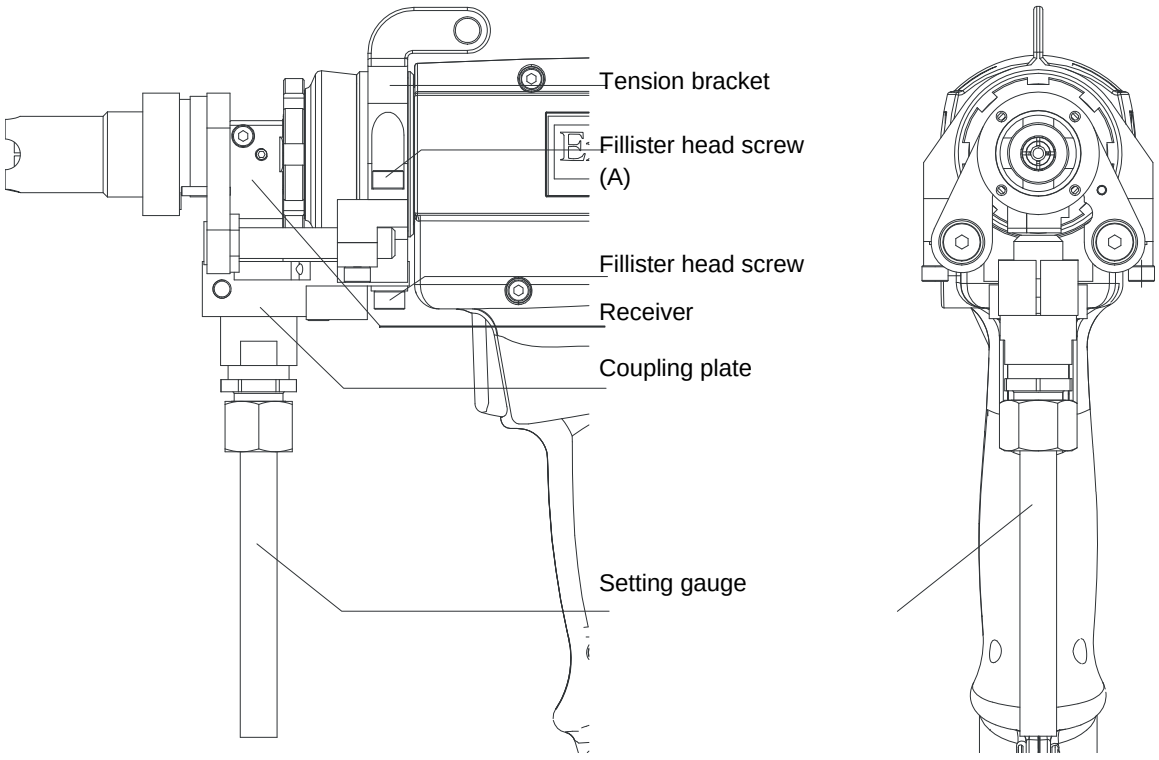

1. Loosen the M 6 fillister head screw on the coupling plate and then remove the feed tube from the coupling plate.
2. Loosen the both M 6 fillister head screws (A) of the tension bracket.
3. Turn the coupling plate such that the setting gauge can plunge easily into the firing channel of the receiver (see figure).
4. Retighten the M 6 fillister head screw of the tension bracket again.
5. Put the feeding tube into the coupling plate again and retighten the M 6 fillister head screw on the coupling plate again.

NOTE!
To avoid feeding failures the firing channel needs to be checked with the setting gauge.

7.3 Adjusting the Safety Clearance to the Collet

NOTE!
The required condition for correct adjustment of the immersion depth is that the weld stud is held in its front end position by the loading pin under compressed-air supply.

During the downward movement of the stud by the linear motor the molten front surface of the stud is plunged into the melt of the work piece.

For the stud immersion depth the distance between stud front surface and flashshield needs to be verified. The leading edge of the collet has to stay approx. 1,5 mm behind the flashshield

Verification has to be carried out with the stud specific setting gauge (standard accessory).

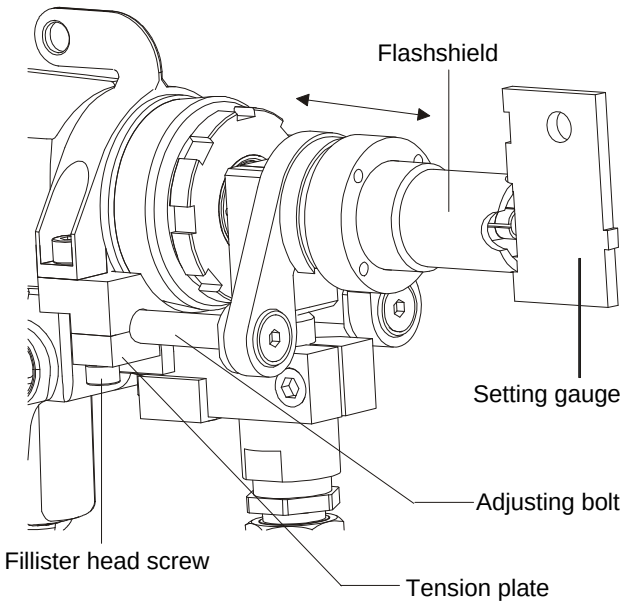

1. Before adjustment verify that a weld stud has been loaded into the collet.
2. Afterwards loosen the both fillister head screws on the tension plate to release the adjusting bolts.
3. Now position the adjusting bolts in the tension plate until stud front surface and front edge of the flashshield fit on the setting gauge.
4. Afterwards retighten the fillister head screws again.

NOTE!
In order to achieve correct weld results, the safety clearance to the collet needs to be checked at regular intervals.

7.4 Adjusting the Loading Pin Speed

NOTE!
The regulation of the loading pin speed is only required for the welding of large-flange studs with flange nut. For all other weld stud types the regulating valve must be opened completely.

For the welding of large-flange studs with flange nut the standardized setting for the forward motion speed of the loading pin must be reduced.

To regulate the loading pin speed the weld gun is equipped with a regulating valve.

To adjust the speed of the loading pin, please proceed as follows:

1. Remove the plastic caps on the left gun side - below the type plate.
2. Insert an Allen key SW 2 mm (see arrow) into the housing aperture until it fits on the screw head.

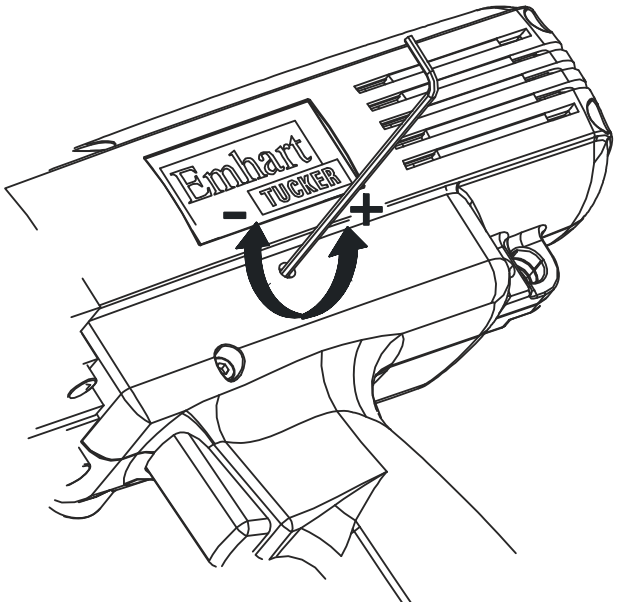

Increasing the loading pin speed:

Turn the screw in " **+** " direction to increase the air escape through the regulating valve.

Reducing the loading pin speed:

Turn the screw in " **-** " direction to reduce the air escape through the regulating valve.

3. After the adjustment work close the housing aperture correctly with the plastic cap again. Penetration of dirt is thus eliminated to a great extent.

7.5 Software-Angle Switch

By fitting the welding gun on the work piece, the weld stud is pushed backwards by the mechanic of the gun.

After the flashshield has been straightly attached, the switch point for the angularity switch can be calibrated. By the + and - tolerance it can be determined how much slope the gun may have (angular deviation), resp. how much deviation by a convex or concave work piece form is allowed.

ATTENTION!

Before you switch on the Control and Power unit, make sure that the frontend of the welding gun (collet with stud) is not pushed into the gun, because the zero point of the measurement stretch length is obtained directly during switched on.

In order to guarantee the proper function of the software angularity switch, the Zero-point must to be located at the same spot at every switch-on time. Therefore:

- Please make sure that during switching-on, the frontend of the welding gun is not compressed or retained in a hold.

Work principle:

The Software-angularity switch is based on the measurement of the stud length.

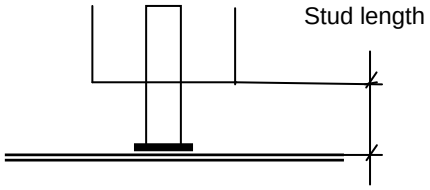

Due to the different path measurement for the feeders SFLM and ETF, there are differences in calibrating.

Feeder SFLM with control and power unit TMP:

```
Angularity switch detection
---------------------------------------
    Feeder number.........:#

    Stud load.............:#########
    Process...............:#########

    Switching point.......:#####mm

    Checkup...............:#########
    Difference............:#####mm

    Switching point +tol...:#####mm
    Switching point –tol...:#####mm
---------------------------------------
<->   <1-5> <+,-> <F1-F6> <ENTER> <ESC>
```

Calibrate the software-angle switch:

1. Menu " Extended functions" → Select calibrate angle switch
2. Quote "Feeder number".
3. Select "Stud load" to feed a new stud.
4. Hold the gun freely in the air so that the stud can reach the front position.
5. Select "Calibration"
   → The green LED is flashing.

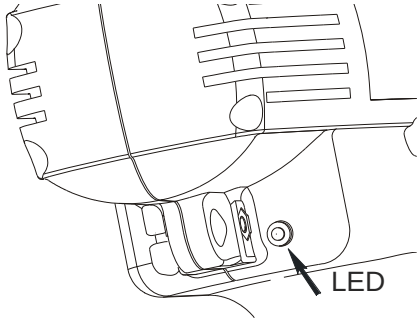

6. Press button "Start weld" → The path measurement system is set to zero
   → green LED is flashing faster.
7. Attach the weld gun on the sheet metal and hold it exactly upright. → SOW is generated → green LED is flashing more slowly again.
8. Press button "Start weld" → green LED is flashing faster again → Measuring value is adopted and memorized. On "Switching point", the current measuring value is displayed at the control panel.

Check the software-angle switch:

1. Menu " Extended functions" → Select calibrate angle switch
2. Quote "Feeder number".
3. Select "Stud load" to feed a new stud.
4. Hold the gun freely in the air so that the stud can reach the front position.
5. Select „check" → The green LED is flashing.
6. Press button "Start weld" → The path measurement system is set to zero
   → green LED is flashing faster.
7. Attach the weld gun on the sheet metal and hold it exactly upright.
   → SOW is generated → green LED is flashing more slowly again.
8. Press button "Start weld" → green LED is flashing faster again → the measured value will be compared to the value memorized, but **not** saved. On "Difference" the deviation from the memorized measured value is displayed at the control panel.

The accuracy of the switch point is adjusted in the menu "Extended functions" → "Calibrate angle switch" under point

Switching point + tol..:##### mm
Switching point - tol..:##### mm

This value must be chosen in such a way that it compensates the length tolerance of the studs as well as the tolerances of the work piece and that it guarantees the correct angle of the welding.

<u>Feeder ETF with control and power unit DCE:</u>

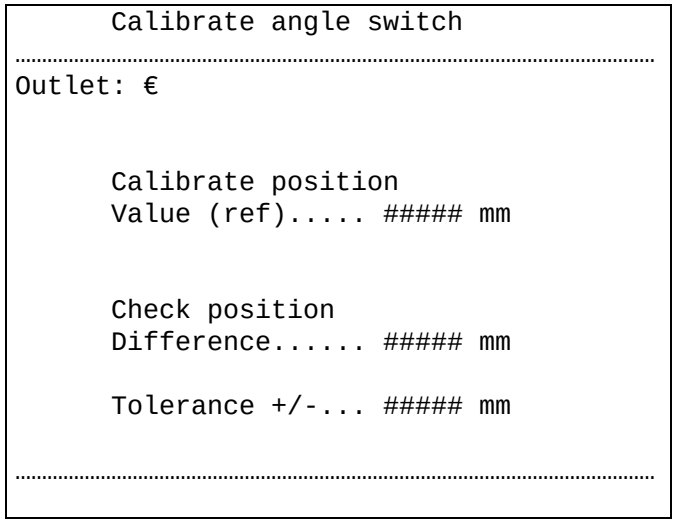

Calibrate the software-angle switch:

1. Select “Stud load“ to feed a new stud into the gun.
2. Select menu“Outlet programming“ for the feeder to be programmed.
3. Select “calibrate angle switch”.
4. The green LED of the gun is now flashing with slow frequency.
5. Change to “Calibrate position“ via arrow key “ ↑ “.
6. Attach the pistol on the sheet metal and hold it exactly upright. → SOW is generated → green LED is still flashing with slow frequency
7. Press button “Start weld“ → green LED is flashing with higher frequency.
8. By unclasping the button “Start weld“, the measuring value is adopted in the control panel and displayed in the line “Value (ref)“.
9. By the button“F5“ the menu is quit and the reference value is adopted in the original program.



NOTE!
A storage is not effected until the menu ”Programming weld outlet“ is quit by button ”ENTER“!

The calibration of the angle switch is also possible via the weld program.

Precondition: The angle switch must be activated in the outlet programming.

There are the following possibilities in the weld program:		
Angle switch	**Pos.**	**Function**
	Prog.	Program-related reference value of the angle switch, newly calibrate here.
	Outlet	Outlet-related reference value of the angle switch, already calibrated in the original programming.
	No	The angle switch is deactivated for that weld program.

Check software- angle switch:

1. Select “Stud load“ to feed a new stud into the gun.
2. Select the menu ”Outlet programming“ for the feeder to program.
3. Select “Calibrate angle switch”.
4. The green LED of the gun is now flashing with slow frequency.
5. The selection is now set to “Check position“.
6. Attach the weld gun on the sheet metal and hold it exactly upright. → SOW is generated → green LED is still flashing with slow frequency
7. Press button “Start weld“ → green LED is flashing with higher frequency.
8. By unclasping the button “Start weld“, the measuring value is adopted in the control panel and in the line “Difference“, the deviation regarding the reference value is displayed with the correct signs.

The accuracy of the switch point is adjusted in the menu for calibrating the angle switch under point “Tolerance +/-“.

This value must be chosen in such a way that it compensates the length tolerance of the studs as well as the tolerances of the work piece and that it guarantees the correct angle of the welding.

7.6 Program Selector Switch (Option)

The option program selector switch with the PLM 200 is possible by the attachment of an additional housing. This housing is located at the right side of the gun (in welding direction) and includes two buttons and a display.

By pressing of the particular button, the programs 1 to 3 can be preselected upwardly or downwardly. The number 0 in the display means that no program is preselected. The program preselection must be effected before welding. If you try to weld with ”Program 0“, this leads to the error message ”Program preselection fails“.

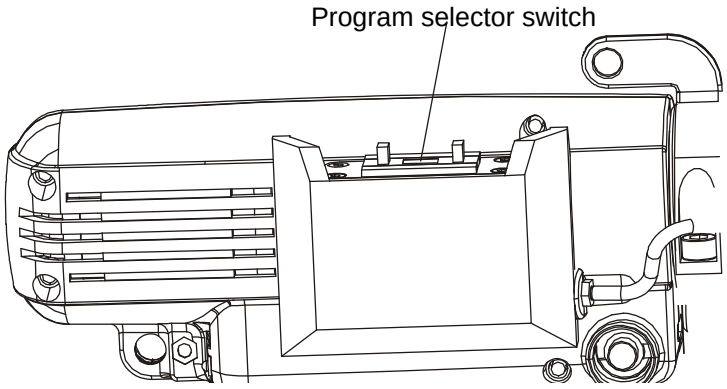

NOTE!
The program preselection with hand gun only works with a SFLM-feeder of the type A or with an ETF feeder after the programming with ”External slide control”.

8 Verification of Feed Tube Locking

WARNING!
When checking the feed tube locking wearing of protective glasses is imperative. Never point the stud ejection opening of the feed tube towards personnel.

The locking switch is a safety device that will prevent the ejection of studs, if the feed tube has been connected incorrectly.
The following sequence must be observed when testing the feed tube locking function.

1. Remove the welding gun from the connected stud feeder.
2. Loosen the fillister head screw on the coupling plate so that the coupling of the feed tube can be displaced axially.
3. Draw the feed tube out of the coupling plate up to the point at which the actuation pin of the locking switch is no longer suppressed.
4. Tighten the fillister head screw on the coupling plate and reconnect the welding gun to the stud feeder.
5. Then actuate a stud feeding by pushing the refeed button.

- **Correct Function:**

  On correct function of the feed tube locking no weld stud can be supplied to the PLM 200.

- **Malfunction:**

  If a weld stud is supplied to the PLM 200 the locking switch is malfunctioning.

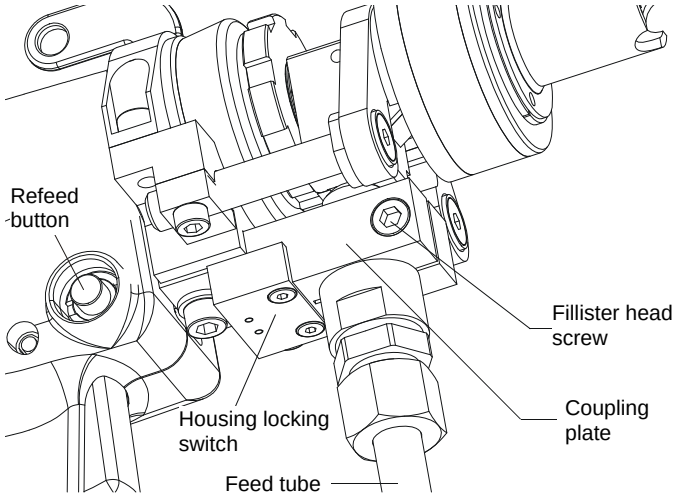

6. Disconnect the welding gun from the connected stud feeder once again.
7. Fit the feed tube back in the specified position and restore the connection to the welding gun feeder.

WARNING!
In case of a feed tube locking malfunction, PLM 200 operation must be stopped immediately. Trouble-shooting may only be performed by the service personnel.

9 Verification of the Auto-Reload Function

NOTE!
For verification of the auto-reload function the connection of the weld gun to a stud feeder and to a power and control unit from TUCKER is required.

The verification procedure has to be carried out as follows:

1. Verify the correct connection of the feed tube in the coupling plate and check the stud firing angle according to chapter 7.1.
2. Program the loading time t_L and the feeding time t_Z on the welding tool. For further information please see operating manual of the control and power unit.
3. The auto-reload function will be activated by a corresponding signal on the weld gun, of the control and power unit or of the stud feeder.

With this command the loading pin moves into the rear end position. Now the stud can be transferred into the receiver through the feed tube.

The stud is pressed into the collet by the forward motion of the loading pin. The stud is now located in the final welding position.

If there is already a weld stud located in the collet during the stud reload process, it will be ejected from the collet.

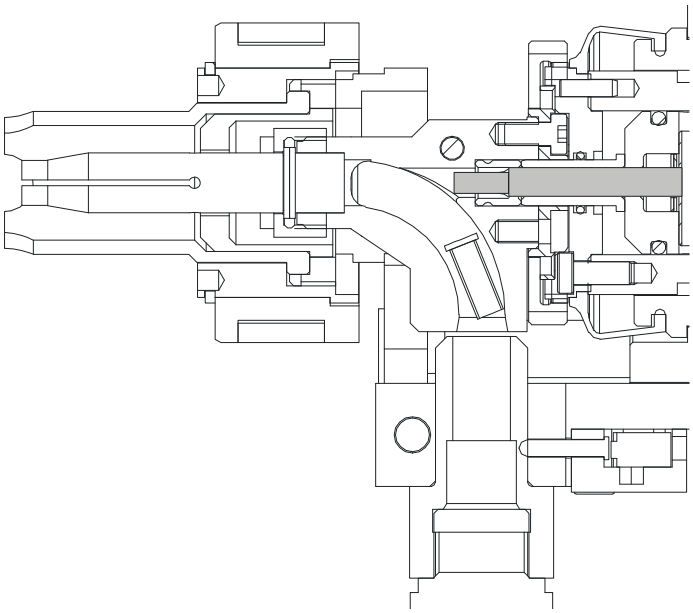

If no stud arrives in the collet the loading and feeding times must be corrected and the connection between weld gun and feeder must be verified. Afterwards repeat verification procedure.

10 Stud Welding Instructions

10.1 Before the Weld Start

NOTE!
The following stud welding instructions must be observed before the welding process is started!

- Prepare the welding position in that way that a planar surface with a diameter of approx. 40 mm is available for fitting of the weld gun. On using a template optional mounting bushings should be implemented.
- In order to guarantee for a high welding quality, the work surface, particularly in the direct welding zone, should be mostly oil-free and free of grease.
- Operate the weld gun in that way that it always contacts the work surface at an angle of 90°.
- During the welding process the position of the gun and the position of the work piece have to retain unmodified.
- Though the bending radii of the feeding tube depend on the stud type to feed, they should not fall below the value of 300 mm.
- If different welding procedures must be performed on one work piece those must take place at different times.
- Radiofrequency weldings must be performed in a separate location and must be supplied from a separate power circuit.
- In order to have optimum weld quality the ground cable on the work piece has to be installed symmetrically and not directly besides the welding location.
- Elimination of unwanted light arcs on pressure spring retention elements will be achieved by a Tucker grounding contact (Order no.: M108 972) connection.
- Vibrations of thin-walled work pieces can be avoided by using a thrust bearing made from copper, brass or aluminium.
- Weld templates must be made of non-magnetic material and manufactured in that way that they cannot shift during the welding process.

NOTE!
The basic stud welding unit requirements can be seen in the TUCKER installation guidelines!

10.2 Course of the Process on Stud Welding

The mechanical process of stud movement, as well as the respective electrical processes, is described in the reference drawing below.

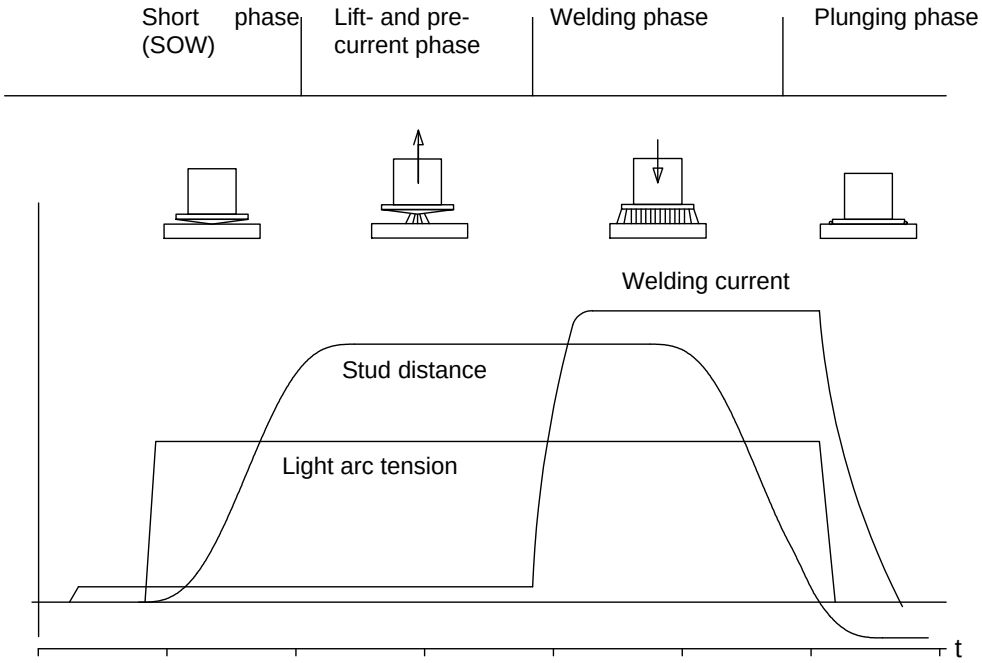

2. The required condition for the welding process is contact of the stud with the work surface (SOW = stud on work piece), so that when the start command has been given the weld circuit will be electrically shorted via stud and work piece.
3. After stabilization of the pilot current the linear motor of the weld gun removes the stud from the work piece in accordance with a specified, programmed curve and the pilot current light arc is ignited. The pilot current light arc is needed for igniting the main light arc.
4. After the pilot current phase is terminated the main welding current is switched on, which will intensify the light arc such that the stud front edge and the work surface are melted.
5. While the light arc creates a liquid melt on the work piece and on the front face of the stud, the linear motor is reversed. By means of a controlled, mechanical movement the stud is pressed into the melt. The linear motor stays in this position in keeping with the programmed holding line.
6. With the plunging of the stud into the melt, the light arc extinguishes so that the homogenous melt coagulates and the weld gun can be removed from the stud when the welding current is switched off again.

The welding cycle is terminated with the removal of the weld gun from the stud and can be repeated after a new stud has been refeed.

10.3 Operation with Protective Gas

On protective gas welding of aluminium studs the atmosphere is expelled from the welding area by the protective gas, so that unwanted reactions between the materials and the ambient air are prevented.

By the use of inert protective gas the fusion melting characteristics of weld stud and work piece are improved and the formation of pores is reduced. It also has a positive effect on the welding bead and on the form of the fusion penetration.

In accordance with DIN EN 439 “Protective gases for welding“, the use of pure argon (Ar 99.99) is advised for welding aluminium studs. The protective gas supply must be made available by the user.



WARNING!

When selecting gas hoses and connection fittings for the protective gas supply, please regard that these are suitable for the customer specific protective gas used.

The supply of protective gas to the welding gun is regulated via a separate TUCKER gas module. The electrical control signal for protective gas operation is always issued by the welding device.

The intervals in the gas feed comprise advance- and after-flow phases. In the advance-flow phase the welding area is shrouded in protective gas. In the after-flow phase chemical reactions are prevented during cooling.



WARNING!

On welding studs using protective gas the safety precautions specified below have to be absolutely observed!

- Only use gas bottles with a pressure reducer and a pressure gauge.
- The pressure reducer must be selected according to the type of gas used and to the applying operating conditions.
- Prior to extended interruptions of the work or after consuming the contents of the bottle, the pressure reducer must be closed.

11 Transport, Packaging and Storing

11.1 Safety Instructions for the Transport

Improper transport

CAUTION!
Damages caused by improper transport.
Improper transport could cause serious damage of property.
Therefore:
- Necessary transport and lift actions are to be executed in that way that damage of the welding gun is excluded.
- Avoid knocks and heavy vibrations.

11.2 Transport Check

Upon delivery, the equipment, including accessories, should be checked for completeness and damage. On externally visible transport damage, proceed as follows:

- Do not accept the delivery or only accept with reservation.
- Note the extent of damage on the transport documents or on the delivery note of the deliverer.
- Induce complaint.

NOTE!
Complain each defect as soon as recognized. Claims for damages can only be asserted within the effective time for complaints.

11.3 Packaging

The respective packaging pieces are packed according to the transport conditions to expect. Exclusively non-polluting materials were used for packaging. The packaging shall protect the respective components against transport damages, corrosion and other damages until assembly. Therefore do not destroy the packaging and remove just shortly before assembly.

Packaging materials handling

Dispose packaging material according to the respectively valid legal regulations and local directives.

CAUTION!
Damage caused to the environment due to wrong disposal!
Packaging materials are valuable raw materials and can be further used in a lot of cases or can be prepared reasonably and recycled.
Therefore:
- Dispose packaging materials environmentally friendly.
- Regard the locally effective regulations for waste disposal. Charge a specialist with the disposal if applicable.

11.4 Storing

Storing of the packaging pieces

Store the packaging pieces under the following conditions:
- Do not store out of doors.
- Store dry and dust-free.
- Protect against insolation.
- Avoid mechanical vibrations.
- Stocking temperature: -25 to +55 °C.
- Relative humidity of air (not condensing): 5 to 95 %.
- On storage longer than 3 months the general condition of all parts and the packaging has to be checked regularly. Refresh or exchange the conservation if necessary.

NOTE!
Notes regarding storage which exceed the requirements mentioned here are possibly on the packaging pieces. These are to be observed respectively.

12 Maintenance and Cleaning

12.1 Safety

Personnel	• The maintenance work described can be executed by the operator, unless it is marked differently. • Some maintenance work may only be executed by specially trained experts. • Maintenance work on the electric installation basically may only be executed by specialists for electronics.

Improper execution of maintenance work



WARNING!
Risk of injury due to improper executed maintenance work!
Improper maintenance can lead to heavy damage to persons and property.
Therefore:
- Before start of work arrange for a sufficient space for assembly.
- If components have been removed pay attention to a correct assembly, install all fastening elements again and observe screw tightening torques.

12.2 Maintenance Schedule

The maintenance work essential for an optimal and failure-free operation is described in the following chapters.

In case of detection of an increased abrasion during regular checks, shorten the required maintenance intervals accordingly to the actual signs of abrasion.

If you have questions concerning maintenance work and intervals contact the manufacturer, see service address on page 2.

Maintenance and Cleaning

Intervals	Wearing parts	Maintenance instructions
daily	• Flashshield • Collet • Loading pin	Remove weld splatters. Check clamping force, clean Clean and check for abrasion
weekly	• Coupling plate • Receiver	Test for abraison.
monthly	• Feed tube • Swivel nut • Clamping ring • Dirt protection cover	A Check integrity and wear. Check for firm fit. Check for firm fit Cleaning and verify correct fit
annually	• Overhaul	Complete check for wear

In order to avoid unnecessary reduction of maintenance intervals for mechanical wearing parts the following components have to be maintained regularly:

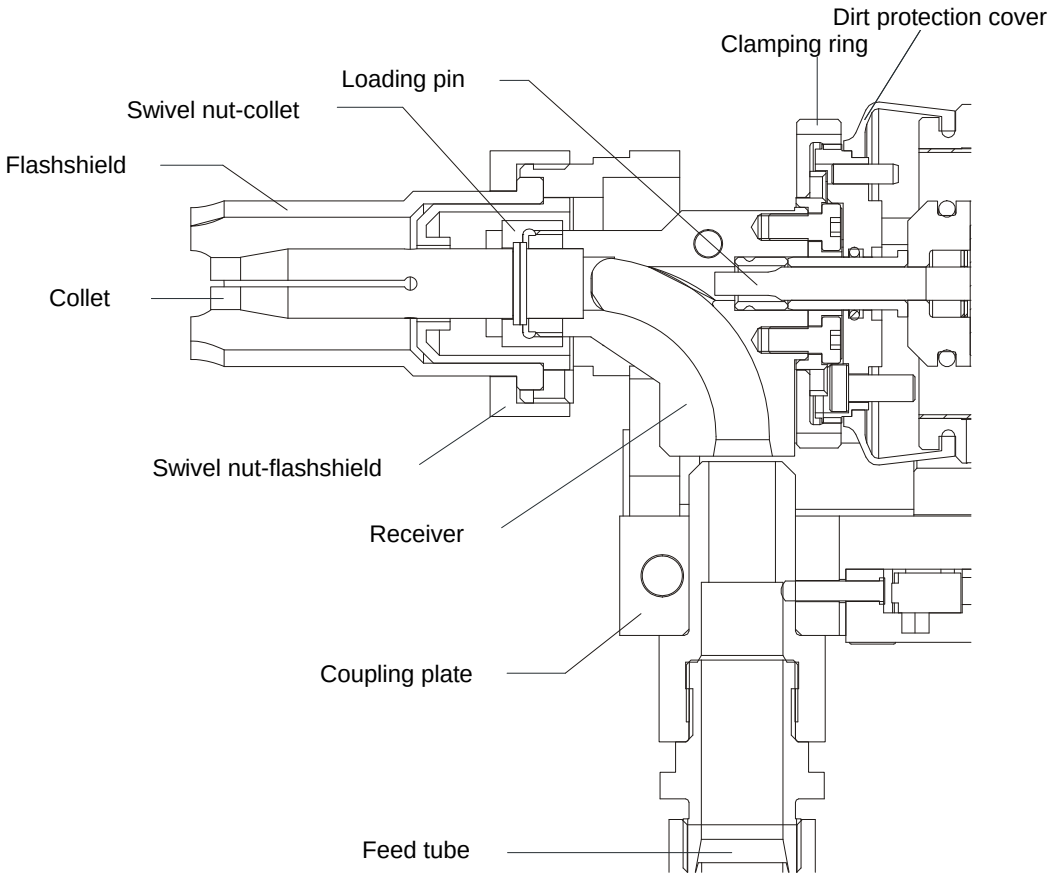

NOTE!

It is recommended to stock the above mentioned wearing parts.

12.3 Maintenance Work

The replacement works for the different PLM 200 versions are described in the following chapters.

If wearing parts have to be replaced please always regard the exploded drawings on corrective maintenance.

NOTE!
Assembly of the indicated wearing parts are to be carried out in reverse order to the disassembly.

- **Execution by specially trained qualified personnel**
- **Required tool:**
  - Allen key SW2
  - Socket wrench for swivel nut
  - Socket wrench for flashshield
  - Socket wrench for collet
  - Hook spanner for clamping ring

Depending on the stud type please consider the tools in the components “Mounting tools and gauge“ (see parts list service instructions).

12.3.1 Replacing the flashshield

1. Unscrew the swivel nut with the socket wrench (accessories) and remove it.
2. Afterwards the flashshield can be pulled off.

NOTE!
For centring the collet in the flash shield, the enclosed setting gauge for the flash shield must be put over the collet before tightening the screws.

12.3.2 Replacing the Collet

1. Remove the complete flashshield.
2. Unscrew the swivel nut from the receiver with the socket wrench and remove the collet.

12.3.3 Replacing the Dirt Protection Cover

1. Loose the Allen head screw on the both clamping plates.
2. Pull out the adjusting pin from the mounting plate.
3. Loose the clamping ring from the clamping flange with a sickle spanner (accessories) and pull off the receiver.
4. Pull off carefully the dirt protection cover from the barrel housing over the clamping flange.

12.3.4 Replacing the Load Pin

1. Remove the complete flashshield support by loosening the Allen head screws on the both clamping plates.
2. Loose the clamping ring from the clamping flange with a sickle spanner (accessories) and pull off the receiver.
3. Pull off carefully the dirt protection cover from the barrel housing over the clamping flange.
4. Unscrew the clamping flange from the air cylinder.
5. Remove the complete load pin.

12.3.5 Replacing the Coupling Plate

1. Remove the left handle by releasing the 7 fillister head screws.
2. Afterwards loosen the wiring of the locking switch from the clamp strip.
3. Remove the coupling plate by loosening the screw on the rear side.

12.3.6 Replacing the Receiver

1. Loosen the Allen head screws on the both clamping plates and remove the adjusting bolt including flashshield.
2. Loosen the clamping ring from the clamping flange with a socket wrench.
3. Loosen the two screws on the connecting flange and remove the receiver.

12.3.7 Replacing the Clamping Ring

1. Loose the Allen head screws on the both clamping plates and remove the adjusting bolt including flashshield.
2. Loosen the clamping ring from the clamping flange with a socket wrench.
3. Loosen the two screws on the connecting flange and remove the receiver.
4. Remove the clamping ring from the receiver.

NOTE!
After all maintenance work the adjustments on the weld gun have to be checked. For this purpose compare the corresponding chapters.

13 Exploded Views

13.1 Kit Receiver

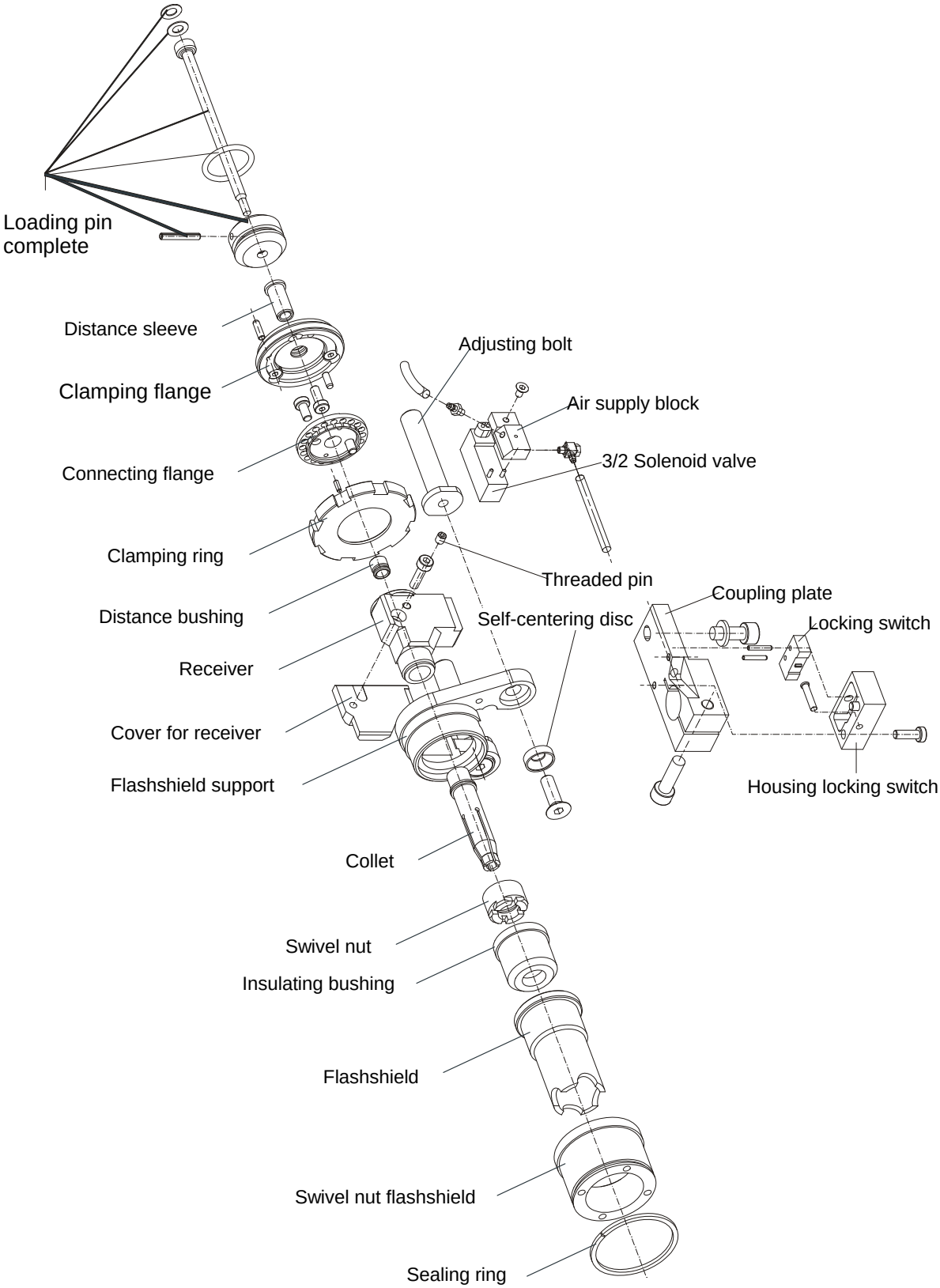

13.2 Kit Housing

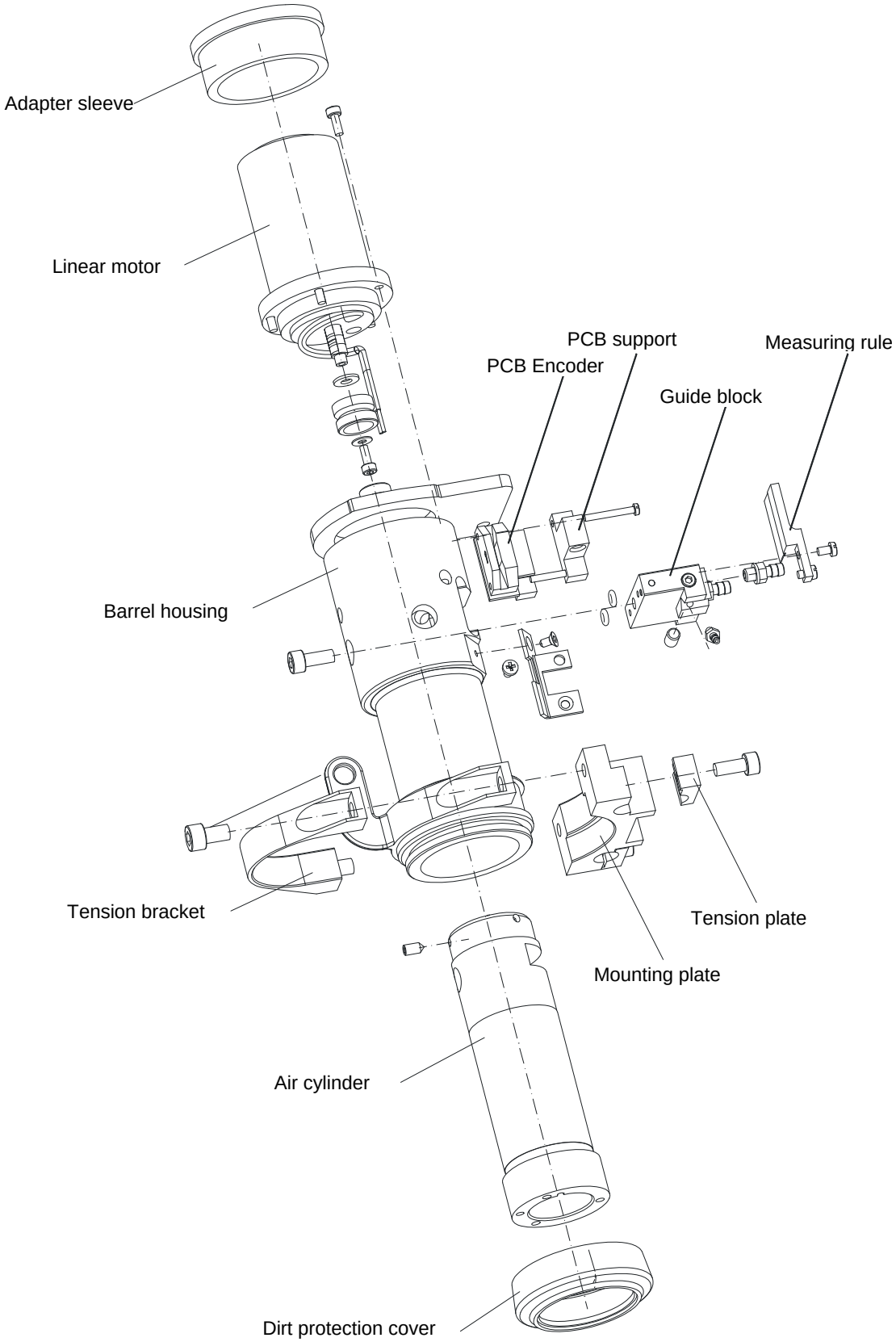

13.3 Kit Handle

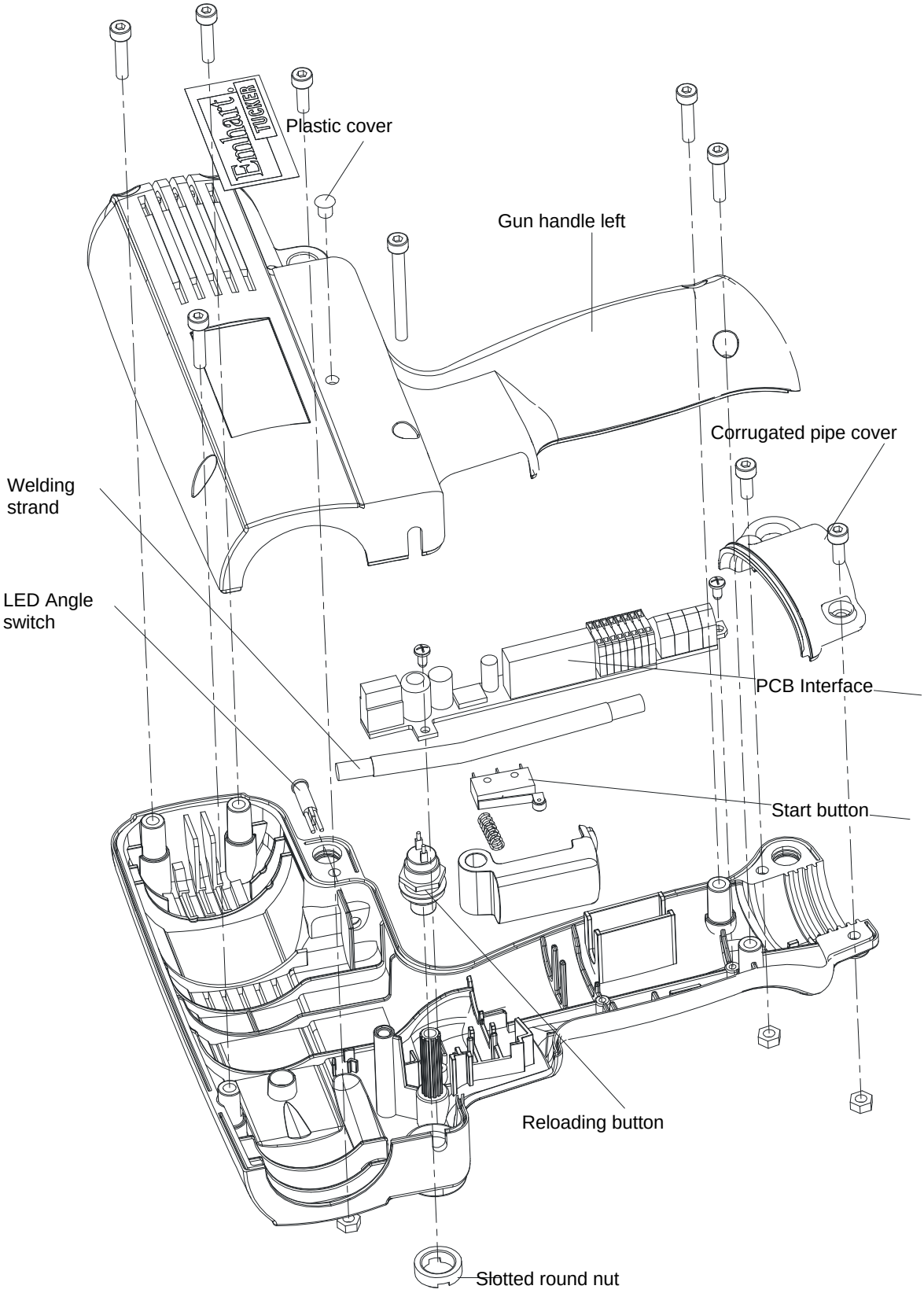

14 Refitting the PLM 200

For welding of different weld studs the weld gun needs to be refitted accordingly.

Notes regarding refitting:

- On all refitting work the wearing parts need to be assembled in reverse order of the disassembly.
- Update the type plate on the PLM 200 after the refitting.
- The adjustments on the PLM 200 have to be checked after all refitting work.

!	**CAUTION!** The refitting work has always to be carried out in a workshop.

Information for order:

- Read the actual stud dimensions from the label located on the welding gun housing: (Ø [mm] / l [mm]).
- The refitting parts needed for a stud exchange are to be discussed with and, if necessary, can also be ordered by the TUCKER customer service.
- Information about the responsible contact person is available via telephone, fax, E-Mail or anytime via the Internet, please see manufacturer address on page 2.

15 Disposal

Unless no recovery- or disposal arrangement was made disassembled parts have to be recycled:

- Scrap metals.
- Recycle plastic elements.
- Dispose sorted all the rest of the components according material properties.

ATTENTION!
Damage caused to the environment due to wrong disposal!
Electronic waste, electronic components, lubricants and other additives are subject to treatment of hazardous waste and may be disposed only by licensed certified specialists!

The local authority or special disposal specialists provide information regarding an environmentally friendly disposal.

Translation of the Original Declaration of Incorporation

Declaration of Incorporation acc. to the EC Machinery Directive 2006/42/EC,

Document number: EBE PLM200 01

Manufacturer:	**Authorized person to compile the relevant documentations:**
	Technische Dokumentation
TUCKER GmbH	TUCKER GmbH
Max-Eyth-Straße 1	Max-Eyth-Straße 1
35387 Gießen	35387 Gießen
Deutschland	Deutschland

Product name: PLM 200
Stud welding gun for short term drawn arc stud welding

Serial number:

Year of manufacture:

The manufacturer declares that the above-mentioned product is a partly completed machinery according to the EC Machinery Directive 2006/42/EC. The product is to be solely used for installation in a machine or partly completed machine and therefore does not comply with all existing requirements of the EC Machinery Directive.
A list of the applied and complied with basic requirements of the EC Machinery Directive is attached to this declaration.
The special technical documents according to appendix VII, paragraph B have been generated. The above-mentioned authorized person commits to submit the specific product documents in response to a reasoned request by the national authorities. The submission is carried out by post in hardcopy form or via electronic data carriers. The putting into service of the product is prohibited till it has been made sure that the machine that is to be installed into the above-mentioned product complies with all basic requirements of the EC Machinery Directive.

The above product follows the provision of the following EC Directives:

Number: 2006/42/ EC Machinery Directive
2004/108/ EC “Electromagnetic Compatibility“

References of directives according to publication in Official Journal of the European Union

Issued by: Manfred Müller, General Manager

Location, date: Giessen,

Legally binding signature:



This declaration certifies compliance with the named Directives.
The appendix is an integral part of this declaration.
The safety instructions on the supplied product information sheet are to be followed.

1.1 Appendix to the Declaration of Incorporation

List of applied and adhered to basic safety and health requirements for construction and assembly of machines with respect to the product mentioned on page 1.

Number-Appendix	Description	Adhered to
1.	Essential health and safety Requirements	
1.1.	General remarks	
1.1.4.	Lightning	X
1.2.	Control system	
1.2.2.	Control devices	X
1.2.4.	Stopping	
1.2.4.4.	Assembly of machinery	X
1.3.	Protection against mechanical hazard	
1.3.4.	Risks due to surface, edges or angels	X
1.3.9.	Risks uncontrolled movements	X
1.5.	Risks due other hazards	
1.5.1.	Electricity supply	X
1.5.4.	Errors of fitting	X
1.5.5.	Extreme temperature	X
1.5.8.	Noise	X
1.5.9.	Vibration	X
1.5.10.	Radiation	X
1.5.11.	External radiation	X
1.7.	Information	
1.7.3.	Marking of machinery	X

Notizen/Notes: