Castolin Eutectic



EUROPEAN PRODUCT CATALOGUE WELDING EQUIPMENT

Castolin Eutectic®
Eutectic Castolin

Part of the **Messer** World

Welcome

Contents

Equipment

Equipment and process selection 3

MMA Welding Process

Manual Metal Arc welding 4
PowerMax 5
XuperMax 2500 6

TIG Welding Process

Tungsten Inert Gas welding 7
CastoTIG 1611 DC 8
CastoTIG 1711 DC 9
CastoTIG 1702 AC/DC 10
CastoTIG 2201 DC 11
CastoTIG 2202 AC/DC 12
CastoTIG 3011 DC 13
CastoTIG 3012 AC/DC 13
Cooling 2200 14
Cooling 3010 14
TIG torches selection 15
Torches for TIG welding 16

MIG/MAG Welding Process

Metal Inert Gas/Metal Active Gas welding 17
XuperMIG 3000 18
DERBY 161 19
DERBY 305 20
DERBY 425 DS II 21

TotalARC²® 3000 Dual Puls Edition 23

TotalARC²® 4000 Dual Puls Edition 24

TotalARC²® 5000 Dual Puls Edition 25
Accessories for TotalARC²® 3000 4000 and 5000 26
MIG/MAG torches selection 27
Torches for MIG/MAG welding 28

iD Weld 2501 29

Plasma Cutting Process

Plasma arc cutting 30
AirJet Compact 31
AirJet 625 32
AirJet 1038 33
Plasma Cutting torches selection 34

PTA Process

Plasma Transferred Arc process 35
MicroGAP 50 DC 36
EuTronic® GAP 2501 DC 37
GAP UniCoating V2.0 38
Accessories for GAP 2501 DC 39
Accessories for GAP 40
GAP torches selection 40
GAP® torches 41
Good Aire 1202 43
Good Aire 1802 44
Notes 45

Symbols used

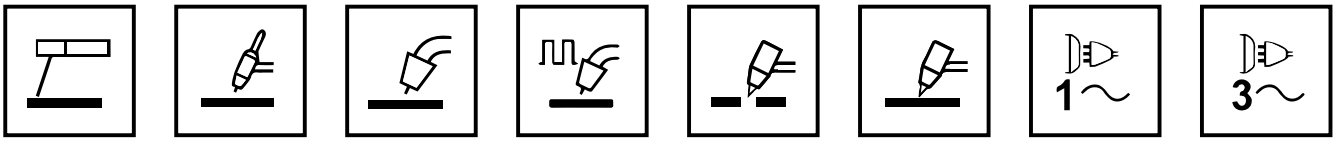

MMA | TIG | MIG/MAG | MIG/MAG PULSE | PLASMA Cutting | PLASMA Welding/Coating | Single phase | Three phase

Equipment and process selection

Products	Process	Mains	Current	Technology	EutecTrode	CastoTIG DC ⎓	CastoTIG AC ~	CastoMag	EnDOtec
PowerMax		16A 1x230V	150A DC	Inverter	✔	✔	-	-	-
Xupermax 2500		16A 3x400V	250A DC	Inverter	✔	✔	-	-	-
CastoTIG 1611 DC		16A 1x230V	160A DC	Inverter	✔	✔	-	-	-
CastoTIG 1711 DC		16A 1x230V	170A DC	Inverter	✔	✔	-	-	-
CastoTIG 1702 AC/DC		16A 1x230V	170A AC/DC	Inverter	✔	✔	✔	-	-
CastoTIG 2201 DC		16A 1x230V	220A DC	Inverter	✔	✔	-	-	-
CastoTIG 2202 AC/DC		16A 1x230V	220A AC/DC	Inverter	✔	✔	✔	-	-
CastoTIG 3011 DC		16A 3x400V	300A DC	Inverter	✔	✔	-	-	-
CastoTIG 3012 AC/DC		16A 3x400V	300A AC/DC	Inverter	✔	✔	✔	-	-
XuperMIG 3000		16A 3x400V	300A	Inverter	✔	✔	-	✔	✔
DERBY 161		16A 1x230V	150A	Step-sw	-	-	-	✔	✔
DERBY 305		32A 3x400V	300 A	Step-sw	-	-	-	✔	✔
DERBY 425 DS II		32A 3x400V	400A	Step-sw	-	-	-	✔	✔
TotalArc² 3000 DPE		16A 3x400V	300A	Inverter	✔	✔	-	✔	✔
TotalArc² 4000 DPE		32A 3x400V	400A	Inverter	✔	✔	-	✔	✔
TotalArc² 5000 DPE		32A 3x400V	500A	Inverter	✔	✔	-	✔	✔

Products	Process	Mains	Current	Technology	Steel	Stainless steel	Copper Cu	Aluminium Al	Cast Iron
AirJet Compact		16A 1x230V	28A	Inverter	✔	✔	✔	✔	✔
AirJet 625		16A 3x400V	60A	Inverter	✔	✔	✔	✔	✔
AirJet 1038		32A 3x400V	100A	Inverter	✔	✔	✔	✔	✔

Products	Process	Mains	Current	Technology	EutecTrode	CastoTIG ⎓	GAP ⎓	EuTroLoy	LaserTech
Micro GAP 50 DC		16A 3x400V	50A	Inverter	-	✔	✔	-	✔
GAP 2501 DC		32A 3x400V	250A	Inverter	✔	✔	✔	✔	-

✔ Recommended

✔ Possible

- Not recommended/ Not possible

MMA Welding Process

Manual Metal Arc welding

When an arc is struck between the flux coated electrode and the workpiece, both the core wire and the workpiece surface melt to form a weld pool. Simultaneous melting of the flux coating on the rod will form gas and slag which protects the weld pool from the surrounding atmosphere. The slag will solidify and cool and must be chipped off the weld bead once the weld run is complete (or before the next weld pass is deposited).

Castolin Eutectic has developed the special **EutecTrode** alloy ranges of low heat input electrodes for industrial wearfacing, repair and joining applications.

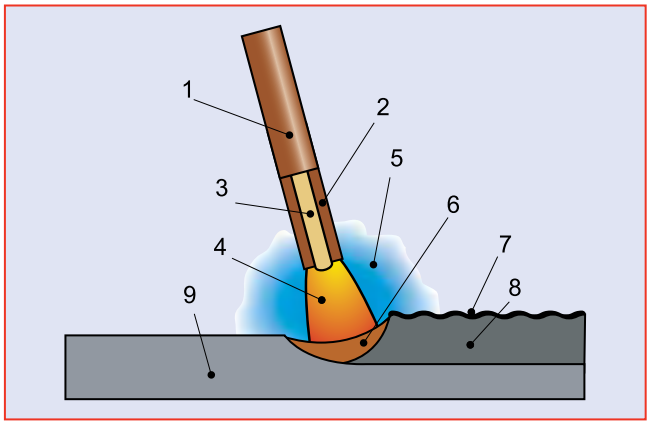

1) Consumable electrode - 2) Flux covering - 3) Core wire
4) Arc - 5) Evolved gas shield - 6) Weld pool - 7) Slag
8) Weld metal - 9) Parent metal









PowerMax

- **Manual electric welding and TIG welding with a single unit connected to 230 V DC**
- **Optimum characteristic curve adaption**

  thanks to innovative resonance inverter technology
- **Light and compact**

  weighs only 4.7 kg and measures 315 x 110 x 199 mm
- This powerful unit can offer more:

  140 A for manual electric welding, **150 A** for TIG welding



The new POWERmax generation unites a number of features for even greater convenience: it is manoeuvrable and easy to handle on the construction site as a result of the lightweight, compact construction.

Why POWERmax?

The completely new resonance principle that has been implemented in the 4 kg class for the first time in this range makes welding easier. The welding result is improved – even using critical electrodes – as a result of the fast-acting closed-loop characteristic control system, and you will never again want to be without the TIG contact ignition feature or the hot start facility when working with electrodes.

Unparalleled welding performance

- Advantages for installation and repair work and use on the construction site: minimum size, minimum weight, low power consumption with high efficiency and generator compatibility (min. 6 kVA).
- Low-spatter manual electric welding with outstanding arc stability thanks to the resonance control system, even when using lowhydrogen and highalloy electrodes. Also capable of working with high-cellulose electrodes.
- Integrated hot start facility enables easy ignition of all types of electrode.
- Ideal unit for TIG welding offering contact ignition with ignition current turned down.
- Fluctuations in the line-side voltage are compensated automatically to provide a constant welding current. At the same time, the resonance concept ensures an ideal welding characteristic.
- IP 23 degree of protection ensures that the unit is suitable for outside welding operations with easy-change fan filters and the integrated short-circuit cut-off facility that acts within 1 second.

with resonance inverter

You can also program the dynamic performance of the arc for manual electric welding and adjust the characteristic curves for the use of high-cellulose electrodes which in itself is a revolutionary facility in a unit of this category. high-cellulose electrodes

Article numbers	
ESC	**Designation**
304 300	**POWERmax compact inverter with manual electric cable and earthing cable**
301 094	Manual electric welding cable, separate, 4 m
300 789	Earthing cable, separate, 3 m
Options	
301 238 (4 m) 301 241 (8 m)	Manual TIG torch G 220 RA
300 826	Adapter cable for TIG torch
300 962	Set of wearing parts for TIG torch
301 669	Pressure-reducing argon/CO regulator

POWERmax	
Welding current range:	10 ÷ 150 A (TIG) 10 ÷ 140 A (manual electric)
Welding current* at 40 C	140 A (35 % duty-cycle), 150 A (25 % duty-cycle), 80 A (100 % duty-cycle)
at 25 C:	140 A (45 % duty-cycle), 100 A (100 % duty-cycle)
On-load voltage:	10.4 - 16.0 V (TIG) 20.4 25.6 V (manual electric)
Open circuit voltage:	92 V
Mains voltage (15 %)	1 x 230 V / 50/60 Hz
System fusing:	16 A (slow-blow)
Connected load for 100 % c.d.f.:	3.6 kVA
Degree of protection:	IP 23
Weight including power lead:	4.7 kg
Dimensions:	315 (L) x 110 (W) x 199 (H) mm
**10-min. cycle in accordance with EN 60974-1*	

XuperMax 2500

- Powerfull, compact, efficient
- Powerful 250 A: MMA and TIG DC (lift-arc)
- Full digitaler Inverter
- Resonant control for optimum welding results
- Pre-programmed ignition parameters for rutile, basic and cellulose electrodes
- Lightweight and compact design for professional use in industry and crafts (only 12.5 kg)



Why XuperMax 2500?

XuperMax 2500 was designed for tough professional use.
Due to reliability, mobility and outstanding welding characteristics XuperMax 2500 will become your ideal partner for demanding welding jobs.

- Stability is safety
  The resonant technology always guarantees a stable arc - the arc itself regulates the process.
- Best ignition
  Whether hot or soft start - ideal pre-ignition parameters are preset for all electrode types
- Rutile, basic or cellulosic
  XuperMax 2500 is suitable for welding with all types of electrodes.
  Even the problems with cellulose electrodes in vertical down position vanish totally!

Article numbers	
ESC	Designation
754011	**XuperMax 2500**
303181	Welding cable, 4 m
303180	Earth cable, 4 m
301238	Torch G 220 RA
300255	Remote-control RC 2
304973	Foot-control RC F
302241	Remote-cable, 5 m

XuperMax 2500	ESC: 754011
Voltage +/- 10% 50/60 Hz	3 x 400
Fuse rating (slow)	16 A
Power at primary (100% duty cycle)	10.3 kVA
Cos phi (at 250 A)	0.99
Welding current range MMA smooth TIG	15 - 250 A 15 - 250 A
Welding current at 10 min/40°C	35% duty-cycle 250 A 60% duty-cycle 200 A 100% duty-cycle 175 A
Open circuit voltage	88 V
Dimensions (L x W x H)	430 x 180 x 320 mm
Weight	12.5 kg

TIG Welding Process

Tungsten Inert Gas welding

In the TIG process the arc is formed between a tungsten electrode and the workpiece in an inert atmosphere of argon or helium. The small intense arc provided by the electrode is ideal for high quality and precision welding.

The tungsten electrode is not consumed during welding. The heat of the arc melts the base metal and a separate filler rod can be added into the weld pool if required.

Castolin Eutectic has developed the special **CastoTig** alloy range for industrial wearfacing, repair and joining applications.

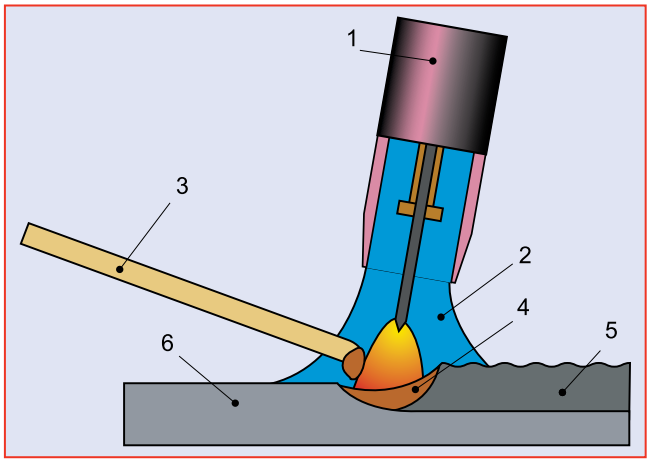

1) Gas nozzle - 2) Gas shielding - 3) Filler rod - 4) Weld pool - 5) Weld bead - 6) Parent metal









CastoTIG 1611 DC

- Exceptionally compact and portable TIG - MMA welding machine 160 A - 230 V - 5,7 kg
- Generator usable
- Microprocessor controlled Inverter power source
- Ideal for mobile onsite use for construction, joining and maintenance applications



Why CastoTIG 1611 DC?

CastoTIG 1611 DC is an advancement of proven Castolin inverter technology.
The microprocessor controlled, compact power source is specially designed for TIG welding with direct current and is also useful for Manual Metal Arc Electrode applications.

- Advantages for repair and construction work : Minimal size and weight, low energy consumption and generator-usability.
- Versatile working on small parts and extra flexibility due to the G 160-torch.
- Easy-to-use by menu guides and simple touch-panel.
  Clear readable digital-display for programming and status.
- The electronic high-frequency-ignition ensures perfect, contactfree ignition on all applications
- Lift-Arc-ignition for welding in areas with sensitive electronics, e.g. control and steering systems.
- Standard-integrated pulse function for improved welding pool control especially on thin sheets.
  All parameters for professional TIG-welding are directly accessible. 2 and 4 step modes.
- CE and S Approval markings for safe use.

Ranges

Welding current (TIG):	5 - 160 A
Welding current (MMA):	0 - 150 A
Gas preflow:	0 - 3 s
Up-Slope:	0 - 20 s
Down-Slope:	0 - 20 s
Crater fill current:	5 - 150 A
Gas post flow:	0 - 20 s
Puls frequency:	0,5 - 250 Hz

Article numbers	
ESC	**Designation**
757963	**CastoTig 1611 DC**
304120	TIG-Torch G160, 4 m
304121	TIG-Torch G160, 8 m
301669	Pressure-reducer Argon
300789	Earth-cable, 3 m
301094	Welding-cable, 4 m

CastoTIG 1611 DC		ESC: 757963
Welding current range:		5 - 160 A
Welding current (TIG) at	25% D.C*:	160 A
	100% D.C*:	100 A
Mains Voltage		1 x 230 V / 50/60 Hz
Open Circuit Voltage	MMA/TIG:	54 V / 10V
Mains fuse (slow-blow)		16 A
Mains power at 100% D.C.*: TIG		2.5 kVA
Protection class:		IP 23S
Official Approvals		CE, S
Weight with mains cable		5,7 kg
Dimensions (mm)		360 (L) x 120 (W) x 215 (H)
**10-min. Duty Cycle, 40 °C ambiant temperature, by EN 60974-1*		

CastoTIG 1711 DC

- **Powerful: 170 A welding current from a 230 V power source**
- **Compact, lightweight, and portable**



Why CastoTIG 1711 DC?

CastoTIG stands for perfect digital welding. The main features and benefits in favour of digital technology are: The closed-loop arc control concept which guarantees outstanding arc stability and perfect arc ignition.
Weighing only 10 kg, the CastoTIG welding units are lighter, more powerful, handier and easier to use than any other power sources.
This together with lightweight portability, makes CastoTIG units ideal for on-site welding.

CastoTIG- Digital TIG welding

The clear control panel design ensures easy operation. If needed, and depending on the model, further welding parameters such as pre- and post- gas flows, start current, etc. can be changed using the microprocessor controller.
For a welding operator, this is vital for high-quality welding results, efficient unit use and therefore, cost-effective work performance. Low-noise, high-speed arc ignition is achieved though the intelligent high-frequency controller.
The welding cycle is microprocessor-controlled, which provides a stable and consistent welding arc.
The „HOLD" memory function enables the operator to read and document welding parameters once a job is finished.

CastoTIG 1711 DC		
Welding current	TIG	2 - 170 A
	MMA	10 - 140 A
Gas pre-flow period:		0 - 9,9 s
Up-Slope:		0 - 9,9 s
Down-Slope:		0 - 9,9 s
Crater filling current:		0 - 100%
Gas post-flow period:		0 - 25 s
Pulse frequency:		0 - 990 Hz
Spot welding time:		0,05 - 25 s
Arc ignition		HF or lift arc

CastoTIG 1711 DC		ESC: 756644
Duty cycle for max. Power at 25°C		50 % (170 A)
Max. current at 100% duty cycle (25°C)		135 A
Duty cycle for max. Power at 40°C		32 % (170 A)
Max. current at 100% duty cylce (40°C)		115 A
Operating voltage	TIG	10,1 - 16,8 V
	MMA	10,3 - 28,6 V
Open Circuit Voltage:		93 V
Mains voltage (-20%|+15%):		230 V / 50/60 Hz
Mains fuse:		16 A, slow-blow
Protection class:		IP 23
Cooling class:		AF
Insulation category:		B
Dimensions (LxWxH) [mm]:		455 x 180 x 340
Weight:		9,5 kg
Certification:		S, CE

CastoTIG 1702 AC/DC

- Powerful: 170 A welding current from a 230 V power source
- Flexible: Compatible for DC and AC operation
- Compact, lightweight, and portable
- AC balance control provided to set cleaning effect / oxide removal and penetration
- low noise, high speed ignition is achieved through the intelligent hig frequency controller



Why CastoTIG 1702 AC/DC?

CastoTIG stands for perfect digital welding. The main features and benefits in favour of digital technology are: The closed-loop arc control concept which guarantees outstanding arc stability and perfect arc ignition.
The CastoTIG welding units are lighter, more powerful, handier and easier to use than any other power sources.
This together with lightweight portability, makes CastoTIG units ideal for on-site welding.

CastoTIG- Digital TIG welding

The clear control panel design ensures easy operation. If needed, and depending on the model, further welding parameters such as pre- and post- gas flows, start current, current downslope for AC operation, etc. can be changed using the microprocessor controller.
For a welding operator, this is vital for high-quality welding results, efficient unit use and therefore, cost-effective work perfo rmance. Low-noise, high-speed arc ignition is achieved though the intelligent high-frequency controller.
The welding cycle is microprocessor-controlled, which provides a stable and consistent welding arc, and furthermore ensures low levels of arc noise during AC welding (CastoTIG 1702/2202 only).
CastoTIG 1702 AC/DC and 2202 AC/DC units: An AC balance control is provided to set cleaning effect/oxide removal and penetration; frequency 40 to 250 Hz.
The „HOLD" memory function enables the operator to read and document welding parameters once a job is finished.

CastoTIG 1702 AC/DC		
Welding current	TIG	3 - 170 A
	MMA	10 - 140 A
Gas pre-flow period:		0 - 9,9 s
Up-Slope:		0 - 9,9 s
Down-Slope:		0 - 9,9 s
Crater filling current:		0 - 100%
Gas post-flow period:		0 - 25 s
Pulse frequency:		0,2 - 999 Hz
Spot welding time:		0,1 - 9,9 s
Arc ignition		HF or lift-arc

CastoTIG 1702 AC/DC		ESC: 304900
Duty cycle for max. Power at 25°C		35% (170 A)
Max. current at 100% duty cycle (25°C)		100 A
Duty cylce for max. Power at 40°C		30 % (170 A)
Max. current at 100% duty cycle (40°C)		90 A
Operating	TIG	10,1 - 16,8 V
voltage	MMA	20,4 - 25,6 V
Open Circuit Voltage:		90 V
Mains voltage (-20%|+15%):		230 V / 50/60 Hz
Mains fuse:		16 A, slow-blow
Protection class:		IP 23
Cooling class:		AF
Insulation category:		B
Dimensions (LxWxH) [mm]:		500 x 410 x 175
Weight:		15 kg
Certification:		S, CE

CastoTIG 2201 DC

- Powerful: 220 A welding current from a 230 V power source
- Compact, lightweight, and portable



Why CastoTIG 2201 DC?

CastoTIG stands for perfect digital welding. The main features and benefits in favour of digital technology are: The closed-loop arc control concept which guarantees outstanding arc stability and perfect arc ignition.
Weighing only 17 kg, the CastoTIG welding units are lighter, more powerful, handier and easier to use than any other power sources.
This together with lightweight portability, makes CastoTIG units ideal for on-site welding.

CastoTIG- Digital TIG welding

The clear control panel design ensures easy operation. If needed, and depending on the model, further welding parameters such as pre- and post- gas flows, start current, etc. can be changed using the microprocessor controller.
For a welding operator, this is vital for high-quality welding results, efficient unit use and therefore, cost-effective work performance. Low-noise, high-speed arc ignition is achieved though the intelligent high-frequency controller.
The welding cycle is microprocessor-controlled, which provides a stable and consistent welding arc.
The „HOLD" memory function enables the operator to read and document welding parameters once a job is finished.

CastoTIG 2201 DC		
Welding current	TIG	3 - 220 A
	MMA	10 - 180 A
Gas pre-flow period:		0 - 9,9 s
Up-Slope:		0 - 9,9 s
Down-Slope:		0 - 9,9 s
Crater filling current:		0 - 100%
Gas post-flow period:		0 - 25 s
Pulse frequency:		0,2 - 999 Hz
Spot welding time:		0,1 - 9,9 s
Arc ignition		HF or lift arc

CastoTIG 2201 DC		ESC: 304901
Duty cycle for max. Power at 25°C		50 % (220 A)
Max. current at 100% ED (25°C)		170 A
ED for max. Power at 40°C		35 % (220 A)
Max. current at 100% ED (40°C)		140 A
Operating	TIG	10,1 - 18,8 V
voltage	MMA	20,4 - 27,2 V
Open Circuit Voltage:		84 V
Mains voltage (-20%|+15%):		230 V / 50/60 Hz
Mains fuses:		16 A, delay
Protection class:		IP 23
Cooling class:		AF
Insulation category:		B
Dimensions (LxWxH) [mm]:		500 x 410 x 175
Weight:		16,8 kg
Certification:		S, CE

CastoTIG 2202 AC/DC

- **Powerful: 220 A welding current from a 230 V power source**
- **Flexible: Compatible for DC and AC operation (CastoTIG 1702/2202)**
- **Compact, lightweight, and portable**



Why CastoTIG 2202 AC/DC?

CastoTIG stands for perfect digital welding. The main features and benefits in favour of digital technology are: The closed-loop arc control concept which guarantees outstanding arc stability and perfect arc ignition.
Weighing only 17 kg, the CastoTIG welding units are lighter, more powerful, handier and easier to use than any other power sources.
This together with lightweight portability, makes CastoTIG units ideal for on-site welding.

CastoTIG- Digital TIG welding

The clear control panel design ensures easy operation. If needed, and depending on the model, further welding parameters such as pre- and post- gas flows, start current, current downslope for AC operation, etc. can be changed using the microprocessor controller.
For a welding operator, this is vital for high-quality welding results, efficient unit use and therefore, cost-effective work perfo rmance. Low-noise, high-speed arc ignition is achieved though the intelligent high-frequency controller.
The welding cycle is microprocessor-controlled, which provides a stable and consistent welding arc, and furthermore ensures low levels of arc noise during AC welding (CastoTIG 1702/2202 only).
CastoTIG 1702 AC/DC and 2202 AC/DC units: An AC balance control is provided to set cleaning effect/oxide removal and penetration; frequency 40 to 250 Hz.
The „HOLD" memory function enables the operator to read and document welding parameters once a job is finished.

CastoTIG 2202 AC/DC		
Welding current	TIG	3 - 220 A
	MMA	10 - 180 A
Gas pre-flow period:		0 - 9,9 s
Up-Slope:		0 - 9,9 s
Down-Slope:		0 - 9,9 s
Crater filling current:		0 - 100%
Gas post-flow period:		0 - 25 s
Pulse frequency:		0,2 - 999 Hz
Spot welding time:		0,1 - 9,9 s
Arc ignition		HF or lift arc

CastoTIG 2202 AC/DC		ESC: 304902
Duty cycle for max. Power at 25°C		40% (220 A)
Max. current at 100% duty cycle (25°C)		150 A
Duty cycle for max. Power at 40°C		30 % (220 A)
Max. current at 100% duty cycle (40°C)		130 A
Operating	TIG	10,1 - 16,8 V
voltage	MMA	20,4 - 27,2 V
Open Circuit Voltage:		93 V
Mains voltage (-20%|+15%):		230 V / 50/60 Hz
Mains fuse:		16 A, slow-blow
Protection class:		IP 23
Cooling class:		AF
Insulation category:		B
Dimensions (LxWxH) [mm]:		500 x 410 x 175
Weight:		17,3 kg
Certification:		S, CE

CastoTIG 3011 DC
CastoTIG 3012 AC/DC

- Powerful 300 Amps TIG equipment for only 23/27 Kgs
- Friendly user
- New Technology with highest precision and efficiency
- Fully digitally controlled



Why CastoTIG 3011 - 3012 AC/DC?

After years of close collaboration between the R&D department and the Technician Specialists, Castolin Eutectic is proud to present the new 300 Amps TIG power sources made with the latest technology and full digital control. This equipment is even more powerful as well as being precise and lighter!!! This user friendly machine will allow your welders (and also less skilled welders) to realize perfect welding in a short period of time.

All the advantages at a glance:

- Perfect ignition!
- Unbelievable stability of the arc!
- Robust equipment

Article numbers	
ESC	**Designation**
307500	**CastoTIG 3011 DC**
307600	**CastoTIG 3012 AC/DC**

Accessories	
ESC	**Designation**
300255	Remote control RC2
304973	Foot operated remote control
307615	Trolley
305000	Torch air cooled G221/4M/UD
307650	Torch water cooled W221/4M/UD
307580	Cooling 3011/3012

Technical Data	CastoTIG 3011 DC	CastoTIG 3012 AC/DC
Welding amperage range: - TIG Welding - MMA Welding	 3-300 A 10-300 A	 3-300 A 10-300 A
Duty cycle: 35 % 60 % 100 %	300 A 270 A 230 A	300 A 230 A 190 A
Open circuit voltage:	85 V	89 V
Power supply:	3 x 400 V +/- 15%	3 x 400 V +/- 15%
Power at primary at 100%:	6.1 kVA	5.5 kVA
Fuse rating:	16 A	16 A
Protection class:	IP 23	IP 23
Insulation class:	B	B
Weight:	23 kg	29 kg
Dimensions LxWxH (mm):	590 x 245 x 450	590 x 245 x 450

Cooling 2200



Technical data

Mains voltage	230 V / 50/60 Hz
Mains voltage tolerance	-30 % / +15 %
Mains current	1.35 A
Cooling capacity at Q = 1 l/min +20°C (68°F)	850 W
Cooling capacity at Q = 1 l/min +40°C (104°F)	500 W
Cooling capacity at Q = max. +20°C (68°F)	950 W
Cooling capacity at Q = max +40°C (104°F)	570 W
Heads up to	25 m (82 ft.)
Capacities up to	3 l/min (0.79 gal/min)
Max. pressure	3.8 bar (54.9 psi)
Pump	24 V DC centrifugal-pump
Coolant centend	1.5 l (0.4 gal)
Type of protection	IP 23
Insulation class	B
Dimension L x W x H (mm)	625 x 240 x 225
Weight (ex. coolant)	6.6 kg

Cooling 2200 **ESC: 304960**

- **Designed for use with CastoTIG 2201 / 2202**

Cooling 3010



Technical data

Mains voltage	400 V / 50/60 Hz
Mains voltage tolerance	-10 % / +10 %
Mains current	0.7 A
Cooling capacity at Q = 1 l/min +25°C (77°F)	800 W
Cooling capacity at Q = 1 l/min +40°C (104°F)	500 W
Cooling capacity at Q = max. +25°C (77°F)	1160 W
Cooling capacity at Q = max +40°C (104°F)	730 W
Heads up to	30 m (98 ft.)
Capacities up to	3 l/min (0.79 gal/min)
Max. pressure	4.2 bar (60.9 psi)
Pump	centrifugal-pump
Coolant centend	4.0 l (1.06 gal)
Type of protection	IP 23
Insulation class	B
Dimension L x W x H (mm)	625 x 240 x 225
Weight (ex. coolant)	9 kg

Cooling 3010 **ESC: 307580**

- **Designed for use with CastoTIG 3011 and 3012**

TIG torches selection

TIG torches	MMA Equipment		TIG Equipment						
	PowerMax	XuperMax 2500	CastoTIG 1611 DC	CastoTIG 1711 DC	CastoTIG 1702 AC/DC	CastoTIG 2201 DC	CastoTIG 2202 AC/DC	CastoTIG 3011 DC	CastoTIG 3012 AC/DC
G 140 RA	✓	✓	-	-	-	-	-	-	-
G220 RA	✓	✓	-	-	-	-	-	-	-
G 90 UD/D	-	-	-	✓	✓	✓	✓	✓	✓
G 160	-	-	✓	-	-	-	-	-	-
G 201 UD/D	-	-	-	✓	✓	✓	✓	✓	✓
G 220 UD/D	-	-	-	✓	✓	✓	✓	✓	✓
G 220 UD/D Flex	-	-	-	✓	✓	✓	✓	✓	✓
W 201 UD/D	-	-	-	-	-	✓ *	✓ *	✓	✓
W 221 UD/D	-	-	-	-	-	✓ *	✓ *	✓	✓
W 250 UD/D	-	-	-	-	-	✓ *	✓ *	✓	✓
W 400 UD/D	-	-	-	-	-	✓ *	✓ *	✓	✓

* with water cooling

✓ **Recommended**

✓ **Possible**

\- **Not recommended/ Not possible**

Torches for TIG welding

Gas cooled Torches with manuel gas valve		4 m	8 m
G 140 RA	140A/35% duty-cycle, bayonet connector and gas hose-connection, 1/4", 1.6 mm tungstenelectrode, 175 mm length, gas-nozzle d=6.5 mm	301715	301719
G 220 RA	220A/40% duty-cycle, bayonet connector and 2 m gas hose-connection, 1/4", 2.4 mm tungstenelectrode, 175 mm length, gas-nozzle d=9.5 mm	301697	301701

Gas cooled Torches		4 m	8 m
G 90 UD/D	90A/35% duty-cycle with second current and Up/Down-function. Bayonet-connector with separate-gasconnection, 7-pole plug, 1,6mm tungsten-electrode, 75mm length, gas-nozzle d=6mm	301279	301282
G 160	Only for CastoTIG 1501 DC. 160A/40% duty-cycle. Bayonet-connector, 5-pole plug, start-button, 1.6mm tungsten-electrode, 175mm length, gasnozzle d=8mm	304120	304121
G 201 UD/D	110A/35% duty-cycle with second current and Up/Down-function. Bayonet-connector with separate-gas-connection, 7-pole plug, 1.6mm tungsten-electrode 175mm length, gas-nozzle d=6mm	305733	305734
G 220 UD/D	220A/40% duty-cycle, with second current and Up/Down-function. 7-pole-plug. Bayonet-connector, 1.6mm tungsten-electrode 175mm length, gasnozzle d=9.5mm	301153	301156
G 220 UD/D Flex	220A/40% duty-cycle, with second current and Up/Down-function. 7-pole-plug, flexible torch-neck. Bayonet-connector, 2.4mm tungsten-electrode 175mm length, gas-nozzle d=9.5mm	303762	303763

Water cooled Torches		4 m	8 m
W 201 UD/D	220A/100% duty-cycle. Bayonet-connector, with second current and Up/Down-function. High-flex hosepackage, 7-pole-plug. 2.4mm tungsten-electrode 175mm length, gas-nozzle d=9.5mm	304986	304990
W 221 UD/D	320A/100% duty-cycle. Bayonet-connector, with second current and Up/Down-function. High-flex hosepackage, 7-pole-plug. 2.4mm tungsten-electrode 175mm length, gas-nozzle d=9.5mm	307650	307651
W 250 UD/D	250A/40% duty-cycle. Bayonet-connector, with second current and Up/Down-function. 7-pole-plug. 2.4mm tungsten-electrode 75mm length, gasnozzle d=8mm	707843	754276
W 400 UD/D	400A/60% duty-cycle. Bayonet-connector, with second current and Up/Down-function. 7-pole-plug. 2.4mm tungsten-electrode 175mm length, gasnozzle d=9.5mm	500264	500265



G 140 RA



G 220 UD/D



G 221 UD/D



W 400 UD/D

MIG/MAG Welding Process

Metal Inert Gas/Metal Active Gas welding

MIG is similar to MMA in that heat is produced by forming an arc between a metal electrode and the workpiece; the electrode melts to form the bead. The main differences are that the metal electrode is a small diameter wire fed from a spool and an externally supplied shielding gas is necessary. As the wire is continuously fed, the process is often referred to as semi-automatic welding.

The pulse mode was developed as a means of stabilizing the open arc at low current values below the threshold level, to avoid short-circuiting and spatter. Metal transfer is achieved by applying pulses of current, each pulse having sufficient force to detach a droplet.

Castolin Eutectic has developed the special **EnDOtec®** (cored wire) and **CastoMag®** (solid wire) alloy ranges for industrial wearfacing, repair and joining applications.

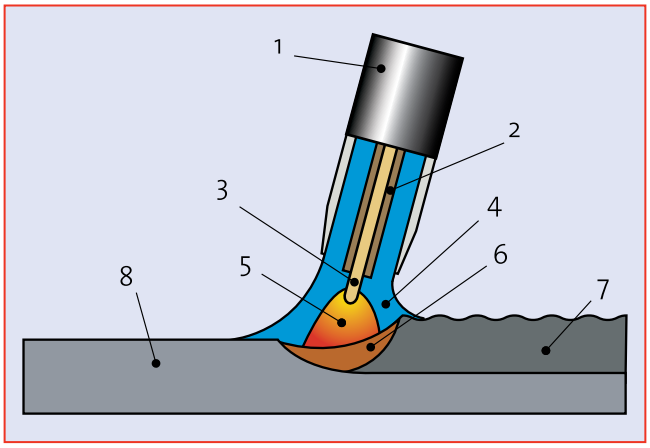

1) Gas nozzle - 2) Contact tube - 3) solid/cored wire
4) Gas shield - 5) Arc - 6) Weld pool - 7) Weld metal
8) Parent metal







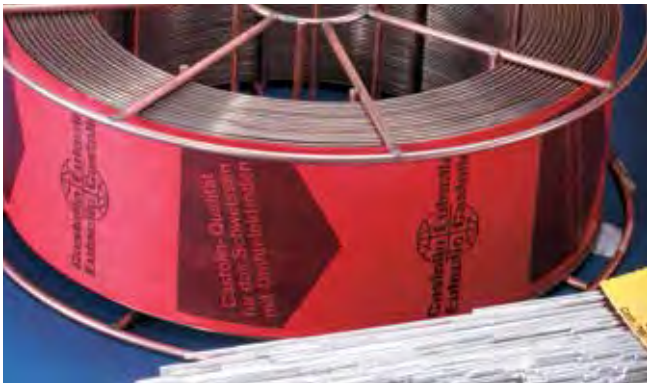

XuperMIG 3000

- Multifunctional welding
- MIG/MAG - TIG - MMA
- 300A - lightweight and solid
- Easy adjustable control panel
- Synergic programs for all popular wires



Why XuperMIG 3000?

XuperMIG 3000 is a lightweight, portable welding-machine, useful for MIG/MAG, MIG-brazing, TIG and MMA.
Its excellent welding properties will win you over! With its versatility, its light but solid structure and user-friendly operation, XuperMIG 3000 is ideal for mobile applications. Especially for working within narrow areas. Useful accessories complete this to a perfect welding-equipment for field and workshop.



Type of the groove		Wire diameter	ESC
	V-groove Solid steel wire	0.6-0.8	307265
		0.8-1.0	307266
		1.0-1.2	307267
		1.2-1.6	759165
	V-groove-knurled Cored wire	1.0-1.2	307270
		1.2-1.6	759166
	U-groove Aluminium wire	0.8-1.0	307268
		1.0-1.2	307269
		1.2-1.6	759167

Article number	
ESC	**Designation**
759100	**XuperMig 3000**
303803	Torch MIG CastoPlus 250 G, 4 m
303805	Torch MIG CastoPlus 360 G, 4 m
307151	Torch TIG G 221 MIG/ZA, 4 m
301061	Earth-cable, 3 m, 35 mm²
303181	Electrode-cable 4m, 35 mm²
759168	Remote-control RXM04
759169	Remote-cable 5m
759170	Remote-cable 10m
759171	Remote-cable 15m
300005	Adaptor for 15kg-spool
307276	Adaptor for 5kg-spool
301669	Pressure-reducer 200bar 0-32L/min
307275	Trolley for machine and gas bottle

XuperMIG 3000	
Welding range :	5-300A DC
MIG/MAG duty cycle:	35%: 300A/29V 100%: 200A/24V
MMA duty cycle	40%: 250A/30V 100%: 190A/27,6V
TIG duty cycle	50%: 250A/20V 100%: 210A/18,4V
Fuse rating:	16 A
Power supply	3 X 400 V + 15% 50-60 Hz
Open circuit voltage (MIG/MAG, MMA, TIG)	9 V / 76 V / 9 V
Protection class	IP 23 S
Insulation class	H
Cooling	AF
Weight	21 Kg
Dimensions (mm)	560 x 280 x 390

DERBY 161

- Easy to use
- Sturdy and practical
- Excellent performance - price ratio
- Single phase 230 V operation
- Easy to transport
- Castolin quality, reliability and service



Why DERBY 161?

Wide range of applications

The DERBY 161 is a compact, semi-automatic welding machine for solid or cored wires wound on 5 or 15 kg spools.

Its compact size and ease of transport make the DERBY 161 ideal for bodywork, repairs and maintenance.

The DERBY 161 feeds all types of wires: solid wires (alloy steel, mild steel and stainless), aluminium alloys, cored wires (up to 1 mm in diameter), for all types of applications and positions.

High quality welding

The DERBY 161 combines ease of use, reliability and sturdiness to provide excellent arc characteristics, which ensure high quality joints.



Despite its compact size, the Derby 161 can use 5 kg or 15 kg spools.

Additional features

- The DERBY 161 is also suitable for flux-cored wires thanks to a polarity inverting system on the front panel.
- An integrated support allows the gas cylinder to be safely secured during any displacement.
- The top tray fitted with a ribbed rubber mat provides practical storage uses.

Safety

The DERBY 161 complies with EN 60974-1, -6, -10 arc welding standards and carries CE and S labels.

- CE conformity with the European safety regulations.
- S Machine-designed for working in restricted enclosures.

Article number	
ESC	**Designation**
600120	**Derby 161**
303800	Torch CastoPlus 150 G / 3m
303802	Torch CastoPlus 250 G / 3m
658175	Steel roll Ø 0,6 - 0,8 mm
756488	Roll for Al Ø 1,0 - 1,2 mm
654253	Carbon-Teflon roll (FF) Ø 1,0 - 1,2 mm
301669	Argon regulator
600150	Roll for steel and cored wires Ø 0,6 / 0,8 / 0,9 mm (as delivered)
600151	Roll for steel and cored wires Ø 1,0 / 1,2 mm
600152	Roll for Al Ø 0,8 / 1,0 mm
600158	Smooth press roll

Technical data: DERBY 161			
Power supply		230V/single phase-50/60Hz	
Power consumption at 60% duty cycle		2,6 kVA	
Welding amperage range min./max.		30 - 150 A	
Number of steps		6	
Degree of protection		IP 22	
Insulation class		H	
Welding amperage at 40°C Duty cycle	. 20%	140 A	
	. 50%	80 A	
	. 100%	62 A	
Number of feed rolls		2	
Polarity inverter on front panel		Yes	
Wire diameters compatible with delivered rolls		0,6 / 0,8 / 0,9 mm	
Dimensions L x W x H		615 x 395 x 535 mm	
Weight		37 kg	

DERBY 305

- Easy to use
- Sturdy and practical
- Excellent performance - price ratio
- Powerful: 300A
- Delivered complete, ready to use
- Castolin quality, reliability and service



Why DERBY 305?

Wide range of applications

The DERBY 305 is a compact, semi-automatic welding machine for solid or cored wires wound on 5kg or 15kg spools.

The DERBY 305 is suitable for sheet metal fabrication, steel construction, repair and maintenance.

The DERBY 305 feeds all types of wires : solid wires (alloy steel, mild steel and stainless), aluminium alloys, cored wires for joining and coating in a wide range of diameters and for all applications and positions.

High quality welding

The DERBY 305 combines ease of use, reliability and sturdiness to provide excellent arc characteristics which ensure high quality joints with little spatter due to two smoothing coils.
The 4 roll drive system assures perfect wire feeding especially for cored wires





Additional features

- The DERBY 305 is also suitable for self shielded cored wires thanks to a polarity inverting system on the panel.
- An integrated support allows the gas cylinder to be safely secured during any displacement.
- The top tray fitted with a ribbed rubber mat provides practical storage uses.

Safety

The DERBY 305 conforms to the EN 60974-1, -6, -10 arc welding norms and displays the CE and S markings.
- CE conformity with the European safety regulations.
- S conformity for working in restricted enclosures.

Article number	
ESC	**Designation**
757454	**Derby 305**
303804	Torch CastoPlus 360 G / 3m
303805	Torch CastoPlus 360 G / 4m
301669	Argon regulator 0-200 bar 0-32 l/min
600153	Steel roll Ø 0,6 / 0,8 (as delivered)
600154	Steel roll Ø 1,0 / 1,2 (as delivered)
600155	Steel roll Ø 1,2 / 1,6
600156	Roll for Al Ø 0,8 / 1,0
600157	Roll for Al Ø 1,2 / 1,6
600160	Roll for cored wires Ø 1,0 / 1,2
600159	Smooth press roll

Technical data: DERBY 305			
Power supply		3 x 400 V 50/60 Hz	
Power consumption at 60% duty cycle		8 kVA	
Welding amperage range min./max.		30-300 A	
Number of steps		14	
Degree of protection		IP 22	
Insulation class		H	
Welding amperage at 40°C Duty cycle	. 35%	290 A	
	. 60%	225 A	
	. 100%	175 A	
Number of feed rolls		4	
Polarity inverter on panel		Yes	
Spot welding timer		Yes	
Dimensions L x W x H		880 x 500 x 740 mm	
Weight		90 kg	

DERBY 425 DS II

- Tested technology guarantees best quality
- New line merging aesthetics and sturdiness
- Excellent performance - price ratio
- Powerful welding source: 400 A
- Available with or without cooling
- Castolin quality, reliability and service



Why DERBY 425 DS II?

Wide range of applications

The DERBY 425 DS II combining simplicity and polyvalence, provides excellent arc characteristics which ensure high quality joints and coatings with minimal spatter. It is suitable for sheet metal fabrication to industrial applications.

The DERBY 425 DS II feeds all types of wires : solid wires in alloy or non alloy steels, stainless steels and aluminium alloys. Also cored wires with or without shielding gas thanks to a polarity inversion system.

The best balance between power and price

Comprehensive equipment

The 4 roll drive system assures perfect wire feeding especially for cored wires.
The DERBY 425 DS II has a standard digital display for voltage and current.
The available 28 voltage steps allows fine easy adjustments.
The DERBY 425 DS II has an optional water cooling unit for the torch: Derby RE 230.

Article number	
ESC	**Designation**
757500	**Derby 425 DS II (with wheels, arbor, and earth cable 3m)**
757503	Feeder 35/4G water cooled (with steel wire rolls for Ø 0.6/0.8/1.0/1.2/1.6 mm)
757502	Feeder 35/4G air cooled (with steel wire rolls for Ø 0.6/0.8/1.0/1.2/1.6 mm)
600822	Cooler RE 230
600818	Air hose 425/ 5m
600820	Air hose 425/ 10m
600819	Water hose 425/ 5m
600821	Water hose 425/ 10m
303804	Torch Castoplus 360 / 3M
303810	Torch Castoplus 500W / 3M
600153	Steel roll Ø 0,6 / 0,8 (as supplied)
600154	Steel roll Ø 1,0 / 1,2 (as supplied)
600155	Steel roll Ø 1,2 / 1,6
600156	Roll for Al Ø 0,8 / 1,0
600157	Roll for Al Ø 1,2 / 1,6
600160	Roll for cored wire Ø 1,0 / 1,2
600159	Smooth press roll
301669	Argon regulator

Safety

The DERBY 424 DS II conforms to the EN 60974-1, -6, -10 welding norms.

Technical data: DERBY 425 DS II		
Power supply		230/400V 50/60Hz Three phase
Power consumption at 60% duty cycle		14,5 kVA
Welding amperage range min./max.		30-400 A
Number of steps		28
Degree of protection		IP 23 S
Insulation class		H
Welding amperage at 40°C Duty cycle	. 40%	400 A
	. 60%	326 A
	. 100%	255 A
Hose length between source and feeder		5 m, Option: 10 m
Number of feed rolls		4
Adjustable anti-stick at weld finish		adjustable
Adjustable slow speed striking		adjustable
Arbor and wheels for feeder		included
Polarity inverter		yes
Display Voltage/Current		yes
Dimensions Cooler L x W x H		535 x 310 x 200 mm
Dimensions Power source + Feeder L x W x H		1000 x 555 x 1340 mm
Weight Power source + Wheels		123 kg
Weight Feeder air (5m) + Wheels		21 kg
Weight Feeder water (5m) + Wheels		21,3 kg
Weight Cooler		16 kg
Weight Power source + Feeder		144 kg

TotalARC²® 3000
Dual Puls Edition

- Pulse and Standard MIG/MAG - welding
- Up to 91 stored synergic-programs
- 50 jobs storable
- TIG lift-arc and MMA-welding included
- Integrated cooling
- Remote controllable
- MIG-up/down-control by torch-button possible
- Plug and play interfaces for automation and robot-control available
- Integrated dual-pulse-option



Fully digitally controlled inverters for best welding characteristics and all time reproducible welding results.

Why TotalARC2® 3000 Dual Puls Edition?

Dual-Puls finds use for MIG-Aluminium-welding when a scaled (TIG-like) seam-look is requested.
Also Dual-Puls enables a serious improved control at thin-sheet-welding.
This can be done manual, mechanized or automated.

Fields of use:

- Aerospace industry
- Automobile and component supply industry
- Industrial plants, pipeline contruction, assembly companies
- Maintenance and repair
- Manufacture of special vehicles and construction machinery
- Metal and gantry contruction, fitting shops and forges
- Plant, container and machine contruction, steel engineering
- Rail vehicle construction
- Robotic welding
- Shipbuilding /offshore

Article numbers	
ESC	**Designation**
303 650	**TotalArc2 3000 Digital**
303 651	**TotalArc2 3000 Digital Dual Voltage**

TotalARC2® 3000 Dual Puls Edition	
Welding current range	3 - 270 A
40% Duty cycle	270 A
60% Duty cycle	210 A (270 A at 25°C)
100% Duty cycle	170 A (210 A at 25°C)
Operating voltage	14.2 - 27.5 V
Open circuit voltage	50 V
Power supply	3x400 V / 50 / 60 Hz
Power at primary (100%)	4.5 kVA / 100%
Fuse rating	16 AT / 400V
Protection index	IP 23
Dimensions L x W x H (mm)	940x580x900
Weight	71 kg

TotalARC²® 4000
Dual Puls Edition

- Pulse and Standard MIG/MAG - welding
- Up to 91 stored synergic-programs
- 50 jobs storable
- TIG lift-arc and MMA-welding included
- Integrated cooling
- Remote controllable
- MIG-up/down-control by torch-button possible
- Plug and play interfaces for automation and robot-control available
- Integrated dual-pulse-option



Fully digitally controlled inverters for best welding characteristics and all time reproducible welding results.

Why TotalARC2® 4000 Dual Puls Edition?

Dual-Puls finds use for MIG-Aluminium-welding when a scaled (TIG-like) seam-look is requested.
Also Dual-Puls enables a serious improved control at thin-sheet-welding.
This can be done manual, mechanized or automated.

Fields of use:

- Aerospace industry
- Automobile and component supply industry
- Industrial plants, pipeline contruction, assembly companies
- Maintenance and repair
- Manufacture of special vehicles and construction machinery
- Metal and gantry contruction, fitting shops and forges
- Plant, container and machine contruction, steel engineering
- Rail vehicle construction
- Robotic welding
- Shipbuilding /offshore

Article numbers	
ESC	**Designation**
303 740	**TotalArc2 4000 Digital**
303 741	**TotalArc2 4000 Digital Dual Voltage**

TotalARC2® 4000 Dual Puls Edition	
Welding current range	3 - 400 A
40% Duty cycle	400 A
60% Duty cycle	365 A (400 A at 25°C)
100% Duty cycle	320 A (365 A at 25°C)
Operating voltage	14.2 - 34.0 V
Open circuit voltage	70 V
Power supply	3x400 V / 50 / 60 Hz
Power at primary (100%)	12.7 kVA / 100%
Fuse rating	35 AT / 400V
Protection index	IP 23
Dimensions L x W x H (mm)	910x580x900
Weight	75 kg

TotalARC²® 5000
Dual Puls Edition

- Pulse and Standard MIG/MAG - welding
- Up to 91 stored synergic-programs
- 50 jobs storable
- TIG lift-arc and MMA-welding included
- Integrated cooling
- Remote controllable
- MIG-up/down-control by torch-button possible
- Plug and play interfaces for automation and robot-control available
- Integrated dual-pulse-option



Fully digitally controlled inverters for best welding characteristics and all time reproducible welding results.

Why TotalARC2® 5000 Dual Puls Edition?

Dual-Puls finds use for MIG-Aluminium-welding when a scaled (TIG-like) seam-look is requested.
Also Dual-Puls enables a serious improved control at thin-sheet-welding.
This can be done manual, mechanized or automated.

Fields of use:

- Aerospace industry
- Automobile and component supply industry
- Industrial plants, pipeline contruction, assembly companies
- Maintenance and repair
- Manufacture of special vehicles and construction machinery
- Metal and gantry contruction, fitting shops and forges
- Plant, container and machine contruction, steel engineering
- Rail vehicle construction
- Robotic welding
- Shipbuilding /offshore

Article number	
ESC	**Designation**
303 750	**TotalArc2 5000 Digital**
303 751	**TotalArc2 5000 Digital Dual Voltage**

TotalARC2® 5000 Dual Puls Edition	
Welding current range	3 - 500 A
40% Duty cycle	500 A
60% Duty cycle	450 A (500 A at 25°C)
100% Duty cycle	360 A (450 A at 25°C)
Operating voltage	14.2 - 39.0 V
Open circuit voltage	70 V
Power supply	3x400 V / 50 / 60 Hz
Power at primary (100%)	15.1 kVA / 100%
Fuse rating	35 AT / 400V
Protection index	IP 23
Dimensions L x W x H (mm)	910x580x900
Weight	75 kg

Accessories for TotalARC²® 3000 4000 and 5000

Remote control unit RC 2	300255
Remote control unit RC4	300256
Remote control cable, 0.75m/5m/10m/15m/20m	30224(1/2/3/4)
Argon/CO2 gas regulator	301669
Trolley for DSIII	303432
Holder for DSIII	303734
Interconnection cable assembly 1.5/5/10/15/20	3037 (35/36/37/38/39)
Torch balancing boom XUPERlight	303742
Installation set for push/pull torch	303718
Automation Interface AUT 1	303743
Automation Interface AUT 2	303744
External start button, with plug and 5m cable	302652
Interface for connecting TotalArc with a personal computer	303767

MIG/MAG torches selection

MIG/MAG torches	Equipment						
	XuperMIG 3000	DERBY 161	DERBY 305	DERBY 425 DS II	TotalArc² 3000 DPE	TotalArc² 4000 DPE	TotalArc² 5000 DPE
CastoPlus 150 G	✓	✓	✓	✓	✓	✓	✓
CastoPlus 250 G	✓	✓	✓	✓	✓	✓	✓
CastoPlus 360 G	✓	✓	✓	✓	✓	✓	✓
CastoPlus 300 W	-	-	-	✓ *	✓	✓	✓
CastoPlus 500 W	-	-	-	✓ *	✓	✓	✓
CastoPlus 500 W U/D	-	-	-	-	✓	✓	✓
CastoPlus 601 W	-	-	-	✓ *	✓	✓	✓
MSG 400 FD (gas cooled)	-	-	✓	✓	✓	✓	✓
MSG 400 FD (water cooled)	-	-	-	✓ *	✓	✓	✓
MSG 350 MB	-	-	-	✓ *	✓	✓	✓
MSG 500 MB	-	-	-	✓ *	✓	✓	✓
MSG 816 (A)	-	-	-	-	✓ */**	✓ */**	✓ */**

* with water cooling

** with push pull option

✓ **Recommended**

✓ **Possible**

\- **Not recommended/ Not possible**

Torches for MIG/MAG welding

Gas cooled torches		3 m	4 m	5 m
CastoPlus 150 G	180A/60% duty-cycle, Euro-connector, gun-trigger, M6*25/0.8mm contact-tip, gas-nozzle conical 12mm	30380 0	30380 1	-
CastoPlus 250 G	230A/60% duty-cycle, Euro-connector, gun-trigger, M6*28/1.0mm contact-tip, gas-nozzle conical 14.5mm	30380 2	30380 3	-
CastoPlus 360 G	340A/60% duty-cycle Euro-connector, gun-trigger, M8*30/1.2mm contact-tip, gas-nozzle conical 16mm	30380 4	30380 5	30380 6

Water cooled torches		3 m	4 m	5 m
CastoPlus 300 W	300A/100% duty-cycle, Euro-connector, gun-trigger, M6*28/1.0mm contact-tip, gas-nozzle conical 12.5mm	30380 7	30380 8	30380 9
CastoPlus 500 W	500A/100% duty-cycle, Euro-connector, gun-trigger, M8*30/1.2mm contact-tip, gas-nozzle conical 16mm	30381 0	30381 1	30381 2
CastoPlus 500 W U/D	500A/100% duty-cycle, Euro-connector, gun-trigger and up/down-buttons. M8*30/1.2mm contact-tip, gas-nozzle conical 16mm	30381 3	30381 4	30381 5
CastoPlus 601 W	600A/100% ED Euro-connector, gun-trigger, M8*30/1.2mm contact-tip, gas-nozzle conical 16mm	30394 0	30394 1	30394 2

Water cooled torches for heavy duty EnDotec applications		1,5 m	3 m	4 m	5 m
MSG 400 FD	500A/60% duty-cycle, Euro-connector, gun-trigger, gun-grip, M10/2.8 mm contact-tip, gasnozzle conical 20 mm	-	302474	-	-
MSG 400 FD	gun-grip, 650A/100% duty-cycle, Euro-connector, gun-trigger, M10/2.8 mm contact tip, gasnozzle conical 20 mm	751741	302474	302477	302480
MSG 400 FD	gun-grip, long torch-neck, 650A/100%duty-cycle, Euro-connector, gun-trigger, 450 mm torch-neck, M10/2.8 mm contact-tip, gasnozzle conical 20 mm	-	753911		-
MSG 400 FD	industrial grip, 650A/100% duty-cycle, Euro-connector, gun-trigger, M10/2.8 mm contacttip, gas-nozzle conical 20 mm	-	712554	-	-
MSG 400 FD	machine-torch, 650A/100% duty-cycle, Euro-connector, straight torch-neck, M10/2.8 mm contact-tip, gas-nozzle conical 20 mm	-	709140	-	-

Machine torches		1.5 m	2.5 m
MSG 350 MB	350A/100% duty-cycle, Euro-connector, external start, grip/ mounting-pipe, M8*30/1.2 mm contact-tip, gas-nozzle conical 16 mm	302254	712176

Water cooled push-pull torches		5 m	8 m	10 m
MSG 816	400A/100% duty-cycle, Euro-connector, gun-trigger, gun-grip, 9-pole-plug, M8*30/1.0 mm Alu contact-tip, gas-nozzle conical 16 mm	302439	302445	306254


CastoPlus 150 G


CastoPlus 250 G


CastoPlus 360 G


CastoPlus 300 W


CastoPlus 500 W


CastoPlus 500 W U/D

iD Weld 2501

- Ideal for «on-site» maintenance and repair work
- Internal coating of bores with 30 mm diameter or higher
- Longitudinal stroke capability up to 170 mm in one run
- Suitable for most MIG / MAG welding machines



Why iD Weld 2501?

IDweld 2501 is a device for welding, circular exteriors and interiors intended mainly for coating of internal bores from Ø 30 mm.
A modular mechanical unit rotates, and depending on the application also drives a MIG welding head. This head is fitted with a special compact torch, which produces very high quality circumferential weld deposits, even in very tight spaces.
The main fields of application are weld coating of internal bores, interior and exterior circular butt weld joints, tube passage joint welds.
A large range of accessories extends the potential field of applications.

- Internal & external bore welding machine
- Can be used with any conventional MIG/MAG machine
- Easy to set up
- For internal bores down to 30mm diameter
- Separate control box
- Self-indexing vertically
- Variable speed
- Water-cooled head available
- Torch extension kit supplied

Description

The exclusive internal and external orbital welding apparatus has been further developed to improve easier on-site set up and positioning, thus adding greater versatlity and increasing the general robustness of the design.
Developed primarily to reclaim and overlay internal bores with special Castolin Eutectic welding and cladding alloys, the iD Weld 2501 is used in conjunction with any MIG/MAG welding machine with the correct current range and duty cycle to suit the application.

standard delivery Contents

- Basic rotation welding head with column and clamp ring.
- Separate control unit with 3 m interconnection cable.
- Multipurpose base.
- Standard welding neck for internal bores from 30 - 70 mm diameter.
- Extra welding head for internal bores over 70 mm in diameter.
- Radial and axial extensions for operations up to diameters of 240 mm.
- Set of standard wearing spare parts.
- Tool kit for installation and general set up.
- Transport case with foam inserts.

Unique features

- Longitudinal stroke capability up to 170 mm.
- Suitable for internal bore diameters down to 30 mm.
- Multipurpose base plate that allows for greater functional fitting and securing.
- Supporting column of 40 mm diameter that allows it to be used with universal standard components.
- Extended reach capability.
- Easy to adjust in position with rapid off set and repositioning feature thanks to articulated arm, index and quick locking arrangment.
- Robust and compact design to enable the unit to cope with the tough, on site repair enviroment.

IDweld 2501	ESC: 305339
Vertical displacement	170 mm
Diameter range	30 - 800 mm
Rotational speed	0.3 to 12 RPM
Power supply	1 x 230 V
Weight (Feed unit)	19 kg
Weight (control unit)	9.2 kg
Torch	41800 B

Plasma Cutting Process

Plasma arc cutting

Plasma arc cutting has always been seen as an alternative to the oxy-fuel process. However, the important difference between the two processes is that while the oxygen-fuel process oxidises the metal and the heat from the exothermic reaction melts the metal, the plasma process operates by using the heat from the arc to melt the metal. The ability to melt the metal without oxidation is essential when cutting metals, such as stainless steel, which form high temperature oxides.









AirJet Compact

The optimal solution for:

- **sheet metal-working**
- **panel construction**
- **ventilation ducting**
- **workshops**
- **construction sites**



Why AirJet Compact?

AirJet compact is a portable plasma cutting unit. Thanks to its compact construction and low weight, it is the ideal partner for mobile interventions.
No external compressor is required for high quality cuts of up to 6 mm in steel (up to 10 mm split cut).The performance can be increased to 10 mm quality cut (up to 12 mm split cut) with the use of an external compressor.

All the benefits at a glance

- powerful; up to 10 mm material thickness possible
- state-of-the-art inverter technology
- integrated compressor for cutting material thicknesses up to 6 mm
- compact design
- low weight
- ideal for mobile use with permanently integrated torch and earth cables suitable for working in areas with increased electrical hazard (S-mark)
- safety shutdown when removing wearing parts of the torch
- integrated pressure gauge for monitoring the compressed air
- ignition of the pilot arc without HF

- **Equipment** (Art No.: 307300)
  including cutting torch, earth cable, 2 cutting nozzles, 1 electrode
- **Simple operation**
  continuous (stepless) adjustment of the cutting current using a control dial. Initiation of the cutting process by placing the torch on the material to be cut and pressing the torch button.
- **Safety**
  The unit has been designed according to the latest European standards and safety requirements (CE mark).
- **Reliable**
  Power source and torch are the result of many years of experience in cutting technology, and represents the latest state-of-the-art.

AirJet Compact		ESC: 307300
Mains voltage:		1 x 230 V 50/60 Hz
Cutting current	at 50 % int.: at 30% ext.:	20 A 28 A
Max. cutting thickness (steel)[2]	internal: external:	6 mm 10 mm
Mains fuse:		16 AT
Open circuit voltage:		310 V
Protection class:		IP 23
Power factor Cos phi:		0,9
Max. compressed air consumption (external):		100 l/min
Compressed air pressure min.:		4.5 bar
Weight:		16 kg
Dimensions L x W x H:		525 x 175 x 345 mm

AirJet 625

- Latest inverter technology
- Innovative ignition system without HF to extend the service life of the electrodes
- Increase in the cutting speed through a concentrated plasma flow
- Generator-compatible 400 V ± 15 %
- Robust construction for rugged use on construction sites



Why AirJet 625?

The AirJet 625 and AirJet 1038 are portable plasma cutting units of the latest inverter generation for cutting with compressed air. Compact size, low weight, low energy consumption at high cutting performance and generator-compatibility are advantages when used in Production, in Assembly and for repair work.

The electronics and the components are kept separate from the flow of cooling air and are thereby optimally protected from contamination. A wide range of different cutting elements for the burner makes it possible to also use it for more complicated work, for example, cutting in grooves or for gouging. All conductive materials can be cut without any problems and with good results, such as non-alloyed and low-alloy steel, aluminium, CDP® wear plates or castings.

AirJet 625:

- The innovative ignition system without HF contributes to the extended service life of the electrodes
- Concentrated plasma flow through an optimised air flow at high speed, linked with a special electrode and nozzle design. The plasma flow increases the cutting speed and the performance.
- The nozzle and the electrode are cooled by the air flow - the service life is thereby considerably extended.

Article Numbers	
ESC	**Designation**
756300	**AirJet 625**
755755	Torch C 60, 6 m
755756	Torch C 60, 12 m
756349	Set of consumable parts C 60
755810	**Circular cutting set for C 60 / C 100**

Technical data:		
Mains voltage:		3 x 400 V ± 15%
Mains fuse:		16 AT
Cutting current:		20 - 60 A
Pilot current:		20 A
Cutting current	at 40% *:	60 A
	at 60% *:	50 A
	at 100% *:	40 A
Open circuit voltage:		320 V
Power factor cosφ:		0,9
Max. cutting thickness (steel) [1]		30 mm
Protection class:		IP 23
Dimensions (LxWxH) mm:		510 x 247 x 389
Weight:		22 kg
Air consumption:		130 l/min ± 20% at 5.5 bar
Compressed air pressure min.:		5 bar

* 10-min cycle, 40°C ambient temperature, according to EN 60974-1

[1] The maximum cutting thicknesses are standard values, and depend on the desired cutting quality and cutting speed.

AirJet 1038

- Latest inverter technology
- Innovative ignition system without HF to extend the service life of the electrodes
- Increase in the cutting speed through a concentrated plasma flow
- Generator-compatible 400 V ± 15 %
- Robust construction for rugged use on construction sites



Why AirJet 1038?

The AirJet 625 and AirJet 1038 are portable plasma cutting units of the latest inverter generation for cutting with compressed air. Compact size, low weight, low energy consumption at high cutting performance and generator-compatibility are advantages when used in Production, in Assembly and for repair work.

The electronics and the components are kept separate from the flow of cooling air and are thereby optimally protected from contamination. A wide range of different cutting elements for the burner makes it possible to also use it for more complicated work, for example, cutting in grooves or for gouging. All conductive materials can be cut without any problems and with good results, such as non-alloyed and low-alloy steel, aluminium, CDP® wear plates or castings.

AirJet 1038:

- The innovative ignition system without HF contributes to the extended service life of the electrodes
- Concentrated plasma flow through an optimised air flow at high speed, linked with a special electrode and nozzle design. The plasma flow increases the cutting speed and the performance.
- The nozzle and the electrode are cooled by the air flow - the service life is thereby considerably extended.

Article Numbers	
ESC	**Designation**
756400	**AirJet 1038**
755779	Torch C 100, 6 m
755780	Torch C 100, 12 m
756350	Set of consumable parts C 100
755781	Machine burner MC 100, 6 m
755799	Machine burner MC 100, 12 m
756351	Set of consumable parts MC 100

755810	**Circular cutting set for C 60 / C 100**

Technical data:		
Mains voltage:		3 x 400 V ± 15%
Mains fuse:		32 AT
Cutting current:		20 - 100 A
Pilot current:		20 A
Cutting current	at 40% *:	100 A
	at 60% *:	85 A
	at 100% *:	60 A
Open circuit voltage:		320 V
Power factor cosφ:		0,9
Max. cutting thickness (steel) [1]		45 mm
Protection class:		IP 23
Dimensions (LxWxH) mm:		640 x 301 x 455
Weight:		34 kg
Air consumption:		280 l/min ± 20% at 5.5 bar
Compressed air pressure min.:		5 bar

* 10-min cycle, 40°C ambient temperature, according to EN 60974-1
[1] The maximum cutting thicknesses are standard values, and depend on the desired cutting quality and cutting speed.

Plasma Cutting torches selection

Plasma Cutting torches	Equipment		
	AirJet Compact	AirJet 625	AirJet 1038
T 30	✔	-	-
C 60	-	✔	-
C 100	-	-	✔
MC 100	-	-	✔

✔ Recommended

✔ Possible

- Not recommended/ Not possible



T 30



C 60



C 100



MC 100

Plasma Transferred Arc process

The **Eutronic GAP®** is the Castolin Eutectic Plasma Transferred Arc (PTA) process. GAP® is ideal for coating and joining operations. In the PTA process, the plasma is focused while forced through the heat resistant anode, causing a considerable increase of the arc density, energy and temperature. The welding filler alloy, in micro-atomized powder or cold wire form, is conveyed into the plasma arc column where a shielding gas protects the wed pool from the atmosphere.

Castolin Eutectic has developed special powders for GAP® applications.

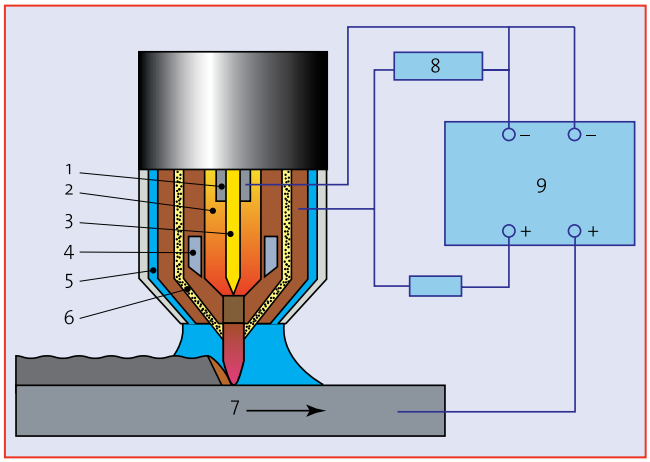

1) Cathode holding device - 2) Plasma gas - 3) Cathode 4) Cooling water - 5) Shielding gas - 6) Feeding gas and powder - 7) Welding direction - 8) Ignition - 9) Double power supply

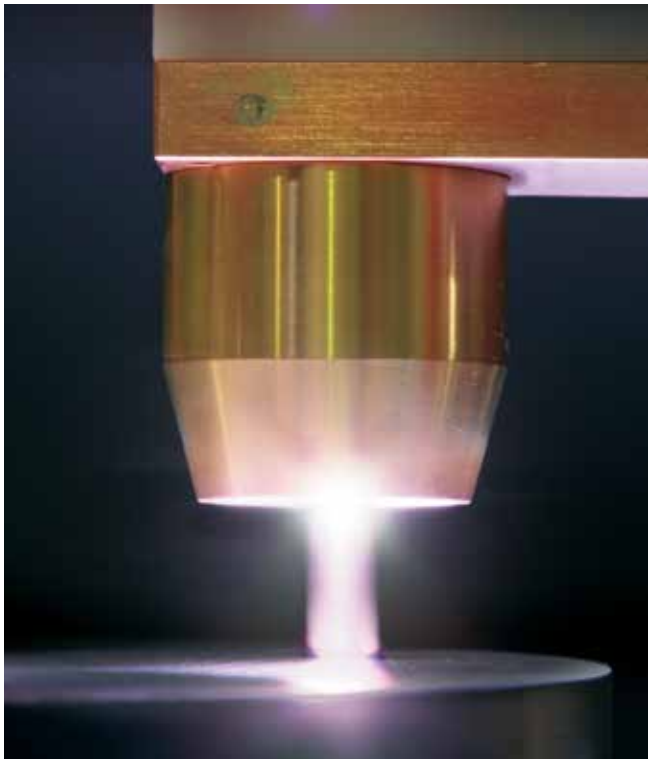







MicroGAP 50 DC

- For manual applications with low welding currents
- Plasma welding and TIG welding
- Clear control panel layout
- Simple pre-selection of welding parameters
- Compact design



Why Micro GAP 50 DC?

Micro GAP 50 DC stands for plasma welding with transferred electric arc (PTA process). The GAP process is ideally suitable for joining and coating work. Through the constriction of the electric arc by means of a cooled anode, a plasma jet with a very high energy density is created. The transferred plasma arc melts the surface of the work piece, which is quickly shielded by inert gas in localised areas. The energy input and the supply of welding filler material in wire form are decoupled which provides many options; for influencing the heat input to the workpiece and resultant dilution levels.

The GAP technology offers a wide range of advantages over conventional arc welding procedures:

- high energy density in an extremely focussed arc
- fast melting rates for short welding times
- homogenous coating, free of pores and spatter
- dilution, heat input, distortion and heat-affected zones are lower than for any other arc welding process.
- precise control of the weld deposit thickness
- highest purity and quality of the alloy
- smoother surface for less rework
- exceptionally good reproducibility

With all these advantages, the GAP process is destined for work that requires extra precision, low heat generation and minimal distortion. The GAP technology also provides an exceptionally high purity and quality of the welding bead from the very first layer.
In conjunction with the high efficiency of the process, the precise control of the layer thickness and the smooth weld beads, these advantages generate considerable economies by cutting both operating costs and welding consumable requirements.

For all manual applications with low welding currents

Micro GAP 50 DC is ideal for welding applications that require precision, high deposit quality and low dilution especially when fully automatic welding is impractical or inapplicable due to small butch quantities or the diversity of the tasks. The welding units are available with various features. The operation is carried out via the touch display.
Micro GAP 50 DC is designed for manual and semi-automatic welding tasks in which frequent parameter changes are required. All the settings are displayed on the LCD display in plain text, and up to 1000 memory locations are available for storing the welding parameters. The extremely powerful inverter delivers 33 A at a 100% duty cycle, which is also sufficient for micro-plasma welding.

Article numbers	
ESC	**Designation**
693626	**Micro GAP 50 DC**
757807	Torch E5N, 3 m hose package
260232	Remote control (foot operated) RC-F
754315	Cooling liquid Xuper Cool, 5l

Micro GAP 50 DC	ESC: 693626
Mains voltage:	3x 400V±15%
Mains frequency:	50/60 Hz
Mains fuse:	max. 16 A
Max. power consumption:	3.5 kVA
RMS value of the largest main current:	9.6 A
Cos phi:	0.99
Protection class:	IP 23
Open Circuit Voltage - main inverter:	85V DC
Open Circuit Voltage - pilot inverter:	100V DC
Max. welding current (100% duty-cycle):	33 A
Max. welding current (60% duty-cycle):	40 A
Max. welding current (35% duty-cycle):	50 A
Max. pilot current (100% duty-cycle):	30 A
Adjustment range for plasma welding/ TIG welding:	0.5 ÷ 50 A
Adjustment range of the pilot current:	0.5 ÷ 30 A
Dimensions (L x W x H):	655 x 310 x 605 mm
Weight:	46.5 kg

EuTronic® GAP 2501 DC

- Plasma welding, TIG welding, MMA welding
- For joining, coating and brazing
- Designed for manual & automated applications
- Versatile unit with strong 250A inverter
- User friendly touch screen control panel
- Fully compatible with all Eutronic GAP accessories



Why Eutronic® GAP 2501 DC?

The EuTronic GAP is the Castolin Eutectic Plasma Transferred Arc (PTA) process, ideal for joining and coating operations.
A stream of accelerated ionized gas in electric arc is focused in plasma nozzle and generates plasma. PTA process can be started by preliminary use of inner pilot arc. The pilot arc is burn between the gas cooled cathodic tungsten electrode and liquid-cooled anodic copper nozzle. The welding filler alloy, in microatomised powder or cold wire form is conveyed into the plasma beam where the shielding gas protects the weld pool from the atmosphere. The plasma arc and the heat input can be far better controlled than a conventional electric arc and the energy is almost completely spent to melt the filler metal, reducing the heat input and dilution to the minimum.
The well-arranged designed operating touch panel of the machine allows the easy adjustment of the welding parameters also with protective gloves.

PTA technology provides a wide range of benefits compared with conventional arc welding processes Major factors are:

- High energy density in an extremely focussed arc
- High deposition rates for shorter welding times
- Lowest dillution, heat input, distortions and HAZ
- Possible multipass overlays
- Smoother surface for lower machining costs
- Maximum purity and performance of the applied alloy even in the first layer.
- Metallic bond strength and impact resistance
- Optionally suitable for fully automated processes (electronically controlled gas valves and separate interface to link the unit with external controllers is giving outstanding flexibility for automation)

Focoused plasma arc allows extra control, that results also in lowest dilution among all the arc welding process.
PTA process produces extra smooth and spatter free deposits, minimizing machining and filler alloy costs.

Application examples:

- Repairs on tool steels, rebuilding of cutting edges, forging, stamping dies, aluminium die casting moulds
- Repairs on cast iron, glass moulds
- Feeding screws repairs
- Hard-facing on drilling tools
- Hard-facing on valve seats and valves
- Hard-facing of mining machinery
- Hard-facing of milling tools

Article numbers:	
ESC	**Designation**
758614	**EuTronic GAP 2501 DC**
260056	Trolley incl. footprint for gas bottles and holders for several accessories
260058	Cooling GAP
754273	Cooling GAP Chiller
260229	Powder Feeder EP 2
260231	Remote control (hand operated) RC-H
260232	Remote control (foot operated) RC-F
758633	X30 Automation Interface extended

EuTronic GAP® 2501 DC	
Mains voltage:	3x 400V+N ±10%
Mains frequency:	50/60 Hz
Mains fuse:	32 A
Max. power consumption:	18 kVA
RMS value of the largest main current:	20 A
Cos phi:	0.99
Protection class:	IP 21 S
Open Circuit Voltage - main inverter:	80V DC
Open Circuit Voltage - pilot inverter:	100V DC
Max. welding current (100% duty-cycle):	160 A
Max. welding current (60% duty-cycle):	200 A
Max. welding current (35% duty-cycle):	250 A
Max. pilot current (100% duty-cycle):	30 A
Adjustment range for plasma welding:	2 ÷ 250 A
Adjustment range of the pilot current:	0.5 ÷ 50 A
Dimensions (L x W x H):	815 x 445 x 635 mm
Weight:	70 kg

GAP UniCoating V2.0

- **Universal coating system for turn symmetric parts**
- **Provides repeatable precision for plasma joining, coating and brazing**
- **Turn-key robotic cell to increase productivity**
- **Complete modular for immediate, tailor made configuration and cost effective adaption to application**



Why GAP UniCoating V2.0?

Castolin Eutectic´s GAP UniCoating V2.0 integrates all components necessary for the overlay welding of round parts.
Well suited to the Glass Mould industry for baffle and bottom plates. Also very efficient at welding various forge dies and moulds as well as engine valves.
With the 200kg table the machine is capable of handling the smallest parts as well as moderately lage ones.

The GAP UniCoating V2.0 incorporates a complete Plasma power source. This unit uses the latest technology in plasma welding. With fully programmable gas controls, pilot arc settings, powder delivery and welding current the GAP UniCoating can deliver a completely repeatable, precisely engineered weld overlay. Welding parts can be coated in one welding cycle in one layer or multilayer (also with vertical/horizontal offset).

The power source is fully integrated with the oscillation and arc length controller to work with the tilting turn table for simple, fast setup of welding parameters. The machine is operated via a portable touch display for the setup and visualization.

All parameters are programmed using the dedicated controls. There is no programming code to learn, all parameters are set in common welding terms for the optimum in operator friendly set-up and operation.

Features

- Base frame contruction of aluminium profiles
- Turn table with T-slots, tiltable +/- 110° (manual via hand wheel), diameter: 400 mm, max. weight: 200kg
- Oscillating unit with 400 mm stroke, stepper motor controlled
- Vertical axis with 400 mm stroke, stepper motor controlled
- Arc voltage control on the vertical axis
- Welding curtain, pneumatically lifted
- E52 plasma powder torch
- 3-axis-slide, manual
- EP-2 powder feeder
- Cooling GAP for torch cooling
- Portable Touch-Display 5,7“ for the set up and visualisation
- Memory for welding jobs and axis movement
- Control cabinet



GAP UniCoating V2.0	ESC: 757008
Compressed air supply:	6 bar
Gas supply	2,5 bar
Supply voltage:	3x 400V+N 50/60 Hz
Mains fuse:	35 A
Max. power consumption:	20 kVA
Protection class:	IP 21 S
Open Circuit Voltage - main inverter:	85V DC
Open Circuit Voltage - pilot inverter:	100 V DC
Max. welding current (100% duty-cycle):	160 A
Max. welding current (40% duty-cycle):	250 A
Max. pilot current (100% duty-cycle):	30 A
Adjustment range for plasma welding:	6 ÷ 250 A
Turn table Ø:	Ø 400 mm
Turn table - Load:	max. 200 kg
Dimensions L x W x H (mm):	2400 x 1000 x 2200
Weight:	ca. 650 kg

Accessories for GAP 2501 DC



Powder Feeder EPz

Technical data

Suitable for GAP® 2501 DC	
Carrier gas	Ar, Ar-H2
Carrier gas flow rate	0 - 4 l/min
Powder reservoir	2 l capacity
Degree of protection	IP 23
Weight (without powder)	7.5 kg
Dimensions L x W x H (mm)	200 x 170 x 470 mm

Powder Feeder EP2 **ESC: 260229**

- Stepless feeding rate control via feeding wheel speed directly from GAP unit.
- Powder feed rate 1,5-95 g/min, depending on feeding wheel configuration, torch, anode and powder density.
- Two EP2 units can be driven in parallel (optional second motor control card) for applications that require feeding of different powders into the weld pool: i.e. matrix and carbides.



Cooling GAP® *

Technical data

Weight	40 kg
Dimensions L x W x H (mm)	900 x 445 x 360mm

Cooling GAP® (*) **ESC: 260058**
Special cooling liquid for PTA torches 5l tank ESC: 754315

(*) Use only Castolin Eutectic dedicated cooling liquid

- Cooling with air/water heat exchanger.
- additional water-water heat exchanger available.



Cooling GAP® Chiller

Technical data

Weight	50 kg
Dimensions L x W x H (mm)	915 x 445 x 400 mm

Cooling GAP® Chiller **ESC: 754273**
Special cooling liquid for PTA torches 5l tank ESC: 754315

(*) Use only Castolin Eutectic dedicated cooling liquid

- Cooling with integrated chiller.



Trolley

Technical data

Weight	45 kg
Dimensions L x W x H (mm)	1.190 x 740 x 1.415 mm

Trolley **ESC: 260056**

- Holds gas cylinders, powder feeder, power source and cooler.
- Wide range of additional trays and accessories for better configuration and ease of use of the trolley.

Accessories for GAP



RC-H manual



RC-F

Remote control units

RC-H manual remote control **ESC: 260231**
including 5 metres connecting cable

RC-F foot operated remote control (pedal) **ESC: 260232**
including 5 metres connecting cable

- **Designed to use with MicroGAP 50 DC and EuTronic® GAP 2501 DC**

GAP torches selection

GAP torches	Equipment			
	Micro GAP 50 DC	GAP 2501 DC	manual torch	machine torch
GAP E5N	✔	✔	✔	✔
GAP E12N	✔	✔	✔	✔
GAP E15N	✔	✔	✔	✔
GAP E20N	✔	✔	✔	✔
GAP E150P	-	✔	✔	-
GAP E54 S-M-D-DL	-	✔	-	✔
GAP E52	-	✔	-	✔
GAP E200P	-	✔	-	✔

✔ Recommended

✔ Possible

\- Not recommended/ Not possible

GAP® torches

GAP® E5N

Construction horizontal	
Max current at 60%	50A
Powder flow rate	N.A
Weight with hose pack	1.5 kg (3m)

GAP® E5N **753606** (3 m)

- liquid cooled manual torch, available also with 70° and 180° neck



GAP® E12N

Construction horizontal	
Max current at 100%	100A
Powder flow rate	N.A
Weight with hose pack	1.9 kg (4m)

GAP® E12N **400900** (4 m) **402420** (6 m) **402501** (8 m)

- liquid cooled manual torch, available also with 70° and 180° neck
- Hose pack: 4-6-8 metres; longer hose packs on request
- Cold wire holder available



GAP® E15N

Construction horizontal	
Max current at 100%	150A
Powder flow rate	N.A
Weight with hose pack	ca. 2.5 kg (4m)

GAP® E15N **260581** (4 m) **260622** (8 m)

- liquid cooled manual torch, available also with 70° and 180° neck
- Hose pack: 4-6-8 metres; longer hose packs on request
- Cold wire holder available



GAP® E20N

Construction horizontal	
Max current at 100%	200A
Powder flow rate **	N.A
Weight with hose pack	1.6 kg (4m)

GAP® E20N **752873** (4 m)

- liquid cooled manual torch, available also with 70° and 180° neck



GAP® E150P

Construction horizontal	
Max current at 100%	150A
Powder flow rate **	5-20 g/min
Weight with hose pack	2.0 kg (3m)

GAP® E150 **260434** (3 m) **260435** (4 m)

- 3m hose pack
- Liquid cooled
- Powder manual torch



GAP® E54 S-M-D-DL

Construction horizontal	
Max current at 100%	200A
Powder flow rate **	10 - 40 g/min

GAP® E54 (length: 330 mm) **400861** (4 m) **400715** (10 m)
GAP® E54 (length: 550 mm) **402272** (4 m) **402260** (10 m)

- Powder machine torch for inner coatings of parts with diameter > 80mm
- Available in four different lengths (models): 330(S), 550(M), 920(D) and 1770(DL)mm.
- With various hose pack lengths
- Built on request, please ask for delivery time



GAP® E52

Construction vertical	
Max current at 100%	200A
Powder flow rate **	3 - 80 g/min
Weight with hose pack	4.8 kg (4m)

GAP® E52 **400204** (4 m) **400878** (6 m) **260230** (8 m)

- Liquid cooled powder machine torch for general applications
- Cold wire holder available
- Hose pack: 4-6-8 metres; longer hose packs on request
- Wide range of anodes and powder nozzles



GAP® E200P

Construction vertical	
Max current at 100%	200A
Powder flow rate **	up to 80 g/min
Weight with hose pack	2.7 kg (4m)

GAP® E52 **755952** (4 m)

- Liquid cooled powder machine torch for general applications
- • Hose pack: 4 metres; longer hose packs on request
- Wide range of anodes and powder nozzles



Good Aire 1202

Portable welding fume extractor for the protection of your health!

Portable welding fume extractor with a cleanable filter and dust recovery.
Highly effective suction. Consider consulting Castolin Eutectic for fume extration torches, work benches and arms for fixed installations.



Effective extraction technology

- The system with the best value for your money
- High filtration efficiency (> 99.9%)
- Cost-effective dedusting of the filter with compressed air ensures easy, economical operation
- No dust exposure when emptying the tilting filter bin
- Compact, sturdy plastic housing
- Approx. 60 dB noise level
- Ergonomic extraction arm and suction head designed according to the latest fluid flow research
- External hinge arm ensures low contamination and low maintenance requirements
- Can be used as a filter for soldering fumes
- Recirculation mode option for welding high-alloy steels
- Also available with BIA W3 certification (BIA is the BG Institute for Occupational Safety & Health)

Features and benefits:

- Manual cleaning of the filter possible
- Powerful extraction
- Low noise emission

Suitable for fume extraction at:

- MIG/MAG welding
- TIG welding
- Plasma welding
- MMA welding
- brazing

Article numbers	
ESC	**Designation**
305403	**Good Aire 1202: Standard device**
305400	**Good Aire 1202: With BIA W3 filter (necessary for high-alloy steels and Ni-based materials)**
305404	Extraction arm 3m
750495	Extraction arm with light

Technical Data	Good Aire 1202
Rated air flow:	1000 m³/h
Inlet diameter:	140 mm
Mains voltage / frequency:	230 V / 50 Hz
Power:	1,3 kW
Filtration area:	10 m³
Noise level:	60 dB(A) per DIN 45635
Dimensions (L x W X H):	946 x 761 x 1361 mm
Weight:	69 kg

Good Aire 1802

Portable welding fume extractor for the protection of your health!

Portable welding fume extractor with a cleanable filter and dust recovery.
Highly effective suction. Consider consulting Castolin Eutectic for fume extration torches, work benches and arms for fixed installations.



Effective extraction technology

- The system with the best value for your money
- High filtration efficiency (> 99.9%)
- Cost-effective dedusting of the filter with compressed air ensures easy, economical operation
- No dust exposure when emptying the tilting filter bin
- Compact, sturdy plastic housing
- Approx. 60 dB noise level
- Ergonomic extraction arm and suction head designed according to the latest fluid flow research
- External hinge arm ensures low contamination and low maintenance requirements
- Can be used as a filter for soldering fumes
- Recirculation mode option for welding high-alloy steels
- Also available with BIA W3 certification (BIA is the BG Institute for Occupational Safety & Health)

Features and benefits:

- Manual cleaning of the filter possible
- Powerful extraction
- Low noise emission
- Two extration arms

Suitable for fume extraction at:

- MIG/MAG welding
- TIG welding
- Plasma welding
- MMA welding
- brazing

Article numbers	
ESC	**Designation**
750440	**Good Aire 1802: Standard device**
750451	**Good Aire 1802: With BIA W3 filter (necessary for high-alloy steels and Ni-based materials)**
305404	Extraction arm 3m
750495	Extraction arm with light

Technical Data	Good Aire 1802
Rated air flow:	2000 m³/h
Inlet diameter:	2 x 140 mm
Mains voltage / frequency:	400 V / 50 Hz
Power:	2,2 kW
Filtration area:	15 m³
Noise level:	60 dB(A) per DIN 45635
Dimensions (L x W X H):	946 x 761 x 1361 mm
Weight:	74 kg

Notes

Notes

Notes

Stronger, with...
Castolin Eutectic

WEAR & FUSION TECHNOLOGY

Castolin Eutectic®
Eutectic Castolin

Ask our
Application Specialists
for a demonstration

140311

-> www.castolin.com <<<
-> www.eutectic.com <<<