Installation Manual

NORITZ AMERICA CORPORATION

TANKLESS GAS WATER HEATER

N-1321M-ASME (Indoor/Outdoor Installation)

Potential dangers from accidents during installation and use are divided into the following three categories. Closely observe these warnings, they are critical to your safety.

⚠ **DANGER**	DANGER indicates an imminently hazardous situation which, if not avoided, will result in death or serious injury.
⚠ **WARNING**	WARNING indicates a potentially hazardous situation which, if not avoided, could result in death or serious injury.
⚠ **CAUTION**	CAUTION indicates a potentially hazardous situation which, if not avoided, may result in minor or moderate injury.

WARNING: If the information in this manual is not followed exactly, a fire or explosion may result causing property damage, personal injury or death.

 Prohibited

 Disconnect Power

 Ground

 Be sure to do

⚠ CAUTION

Requests to Installers

- In order to use the water heater safely, read this installation manual carefully, and follow the installation instructions.
- Failures and damage caused by erroneous work or work not as instructed in this manual are not covered by the warranty.
- Check that the installation was done properly in accordance with this Installation Manual upon completion.
- After completing installation, please either place this Installation Manual in a plastic pouch and attach it to the side of the water heater (or the inside of the pipe cover or recess box if applicable), or hand it to the customer to retain for future reference. Also, be sure to fill in all of the required items on the warranty and to hand the warranty to the customer along with the Owner's Guide.

Installation must conform with local codes, or in the absence of local codes, the National Fuel Gas Code, ANSI Z223.1/ NFPA 54- latest edition and/or CSA B149.1, Natural Gas and Propane Installation Code (NSCNGPIC).

Noritz America reserves the right to discontinue, or change at any time, the designs and/or specifications of its products without notice.

Low NOx Approved by SCAQMD

SAR8713-2
Rev. 04/08

SAR8713 C

1. Included Accessories

The following accessories are included with the unit.
Check for any missing items before starting installation.

Part	Shape	Q'ty	Part	Shape	Q'ty
Tapping Screw	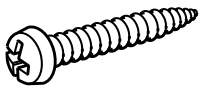	5	Owner's Guide, Warranty, Installation Manual (this document)	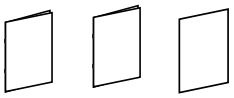	1 each
Remote Controller (See p. 21)		1	Remote Controller Cord (10ft)		1
Heat Exchanger Inspection report		1			

2. Optional Accessories

The accessories listed below are not included with the units, but may be necessary for installation.

Part	Shape	Q'ty	Part	Shape	Q'ty
System Controller	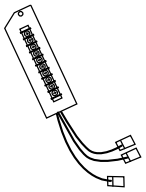	1	Outdoor Vent Cap (VC-132)		1
			Quick Connect Cord		1
Isolation Valves (includes pressure relief valve)	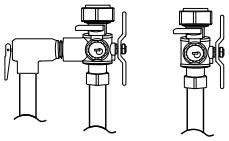	1	Remote Controller Cord (26ft)		1
Remote Controller Outdoor Junction Box	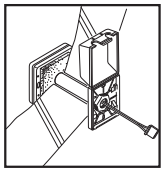	1			

3. Quick Connect Multi System Installation

• The Quick Connect Multi System allows the installation of two units together utilizing only the Quick Connect Cord.

The Quick Connect Cord is 6 ft. long. Install the units 6-17" apart from each other to ensure the cord will be able to reach between the units. (See Typical Plumbing diagram).
(If the distance between the two units is too great, not only will the cord not be able to reach, but the water temperature may also become unstable because of the difference in pipe length between the two units).

System Diagram

* When connecting two units, use only a single remote controller.

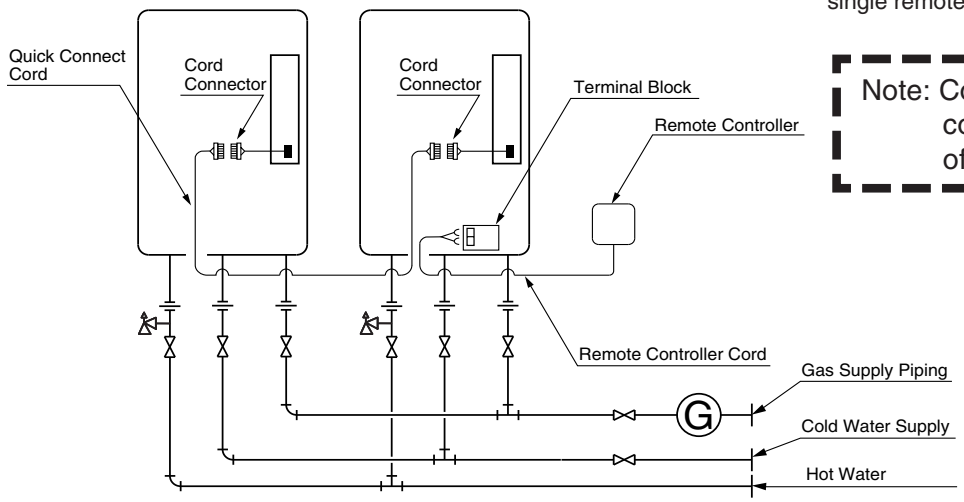

Note: Connect the remote controller to only one of the units.

Typical Plumbing

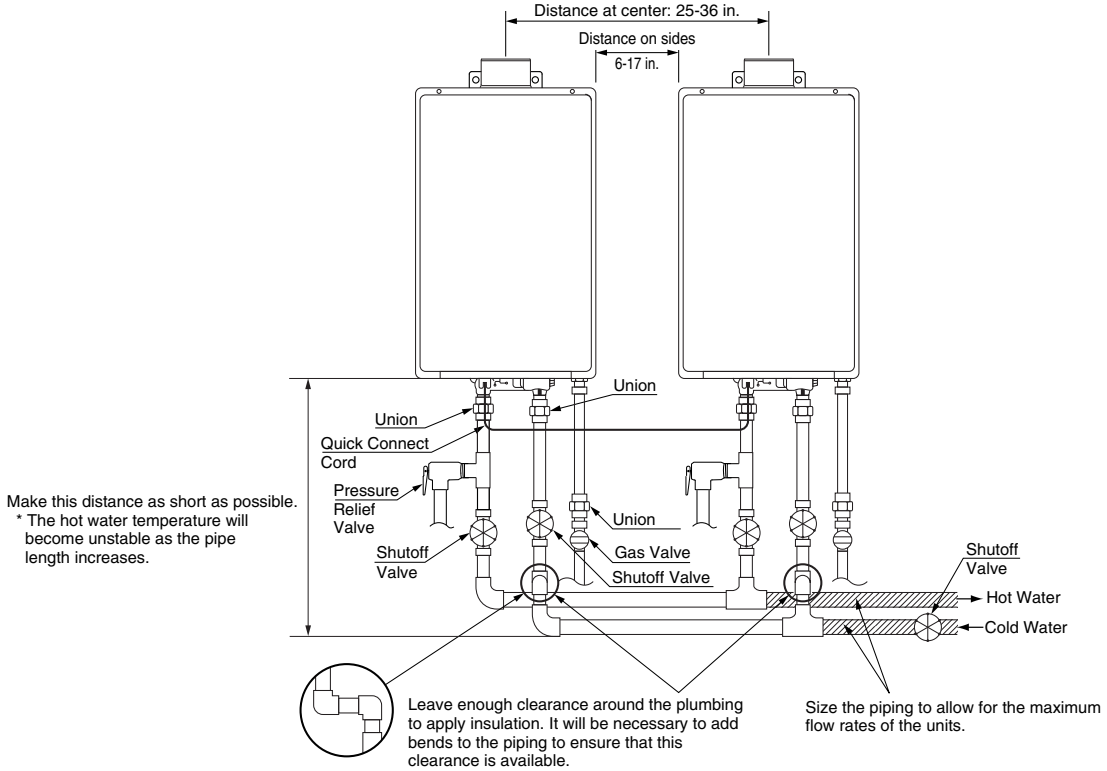

• Insulate the hot water piping to prevent heat loss. Insulate and apply heating materials to the cold water supply piping to prevent heat loss and freezing of pipes when exposed to excessively cold temperatures.

4. Before Installation

⚠ DANGER

Checkup

- Check the fixing brackets and vent pipe yearly for damage or wear. Replace if necessary.

⚠ WARNING

Check the Gas

- Check that the rating plate indicates the correct type of gas.
- Check that the gas supply line is sized for 380,000 Btuh for this unit.

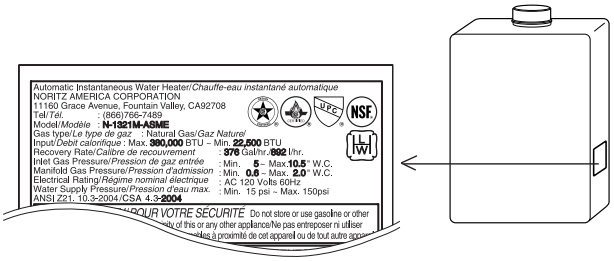

Check the Power

- The power supply required is 120VAC, at 60Hz.
  Using the incorrect voltage may result in fire or electric shock.

Use Extreme Caution if Using With a Solar Pre-Heater

- Using this unit with a solar pre-heater can lead to unpredictable output temperatures and possibly scalding. If absolutely necessary, use mixing valves to ensure output temperatures do not get to scalding levels. Do not use a solar pre-heater with the quick-connect multi-system.

⚠ CAUTION

Do Not Use Equipment for Purposes Other Than Those Specified

- Do not use for other than increasing the temperature of the water supply, as unexpected accidents may occur as a result.

Check Water Supply Quality

- If the water supply is in excess of 12 grains per gallon (200 mg/L) of hardness, acidic or otherwise impure, treat the water with approved methods in order to ensure full warranty coverage.

5. Choosing Installation Site

* Locate the appliance in an area where leakage from the unit or connections will not result in damage to the area adjacent to the appliance or to the lower floors of the structure. When such locations cannot be avoided, it is recommended that a suitable drain pan, adequately drained, be installed under the appliance. The pan must not restrict combustion air flow.

⚠ DANGER

- Install the exhaust vent so that there are no obstacles around the termination and so that exhaust can't accumulate. Do not enclose the termination with corrugated metal or other materials.

⚠ WARNING

- Avoid places where fires are common, such as those where gasoline, benzene and adhesives are handled, or places in which corrosive gases (ammonia, chlorine, sulfur, ethylene compounds, acids) are present.
  Using the incorrect voltage may result in fire or cracking.
- Avoid installation in places where dust or debris will accumulate.
  Dust may block the air-supply opening, causing the performance of the device fan to drop and incomplete combustion to occur as a result.
- Avoid installation in places where special chemical agents (e.g., hair spray or spray detergent) are used.
  Ignition failures and malfunction may occur as a result.
- Carbon Monoxide Poisoning Hazard. Do not install this water heater in a mobile home, recreation vehicle or on a boat.

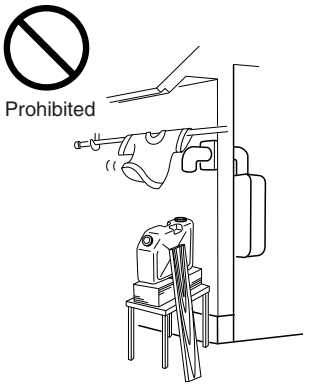

⚠ CAUTION

- Install the water heater in a location where it is free from obstacles and stagnant air.
- Consult with the customer concerning the location of installation.
- Do not install the water heater near staircases or emergency exits.
- Do not install the water heater where the exhaust will blow on outer walls or material not resistant to heat. Also consider the surrounding trees and animals.
  The heat and moisture from the water heater may cause discoloration of walls and resinous materials, or corrosion of aluminum materials.
- Do not locate the vent termination directed towards a window or any other structure which has glass or wired glass facing the termination.

⚠ CAUTION

- Avoid installation above gas ranges or stoves.
- Avoid installation between the kitchen fan and stove. If oily fumes or a large amount of steam are present in the installation location, take measures to prevent the fumes and steam from entering in the equipment.
- Install in a location where the exhaust gas flow will not be affected by fans or range hoods.
- Take care that noise and exhaust gas will not affect neighbors.
- Make sure that the location allows installation of the exhaust vent as specified.
- For outdoor installation, use the outdoor vent cap.
  If it is necessary to vent above the roof line in an outdoor installation, also use the base of the vent cap for rain protection.
- Avoid installation where the unit will be exposed to excessive winds.
- Before installing, make sure that the vent termination (or the vent cap in an outdoor installation) will have the proper clearances according to the National Fuel Gas Code (ANSI Z223.1).

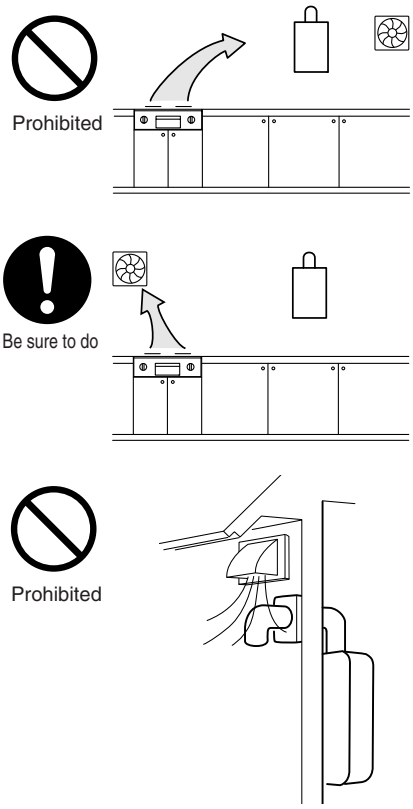

State of California: The water heater must be braced, anchored or strapped to avoid moving during an earthquake. Contact local utilities for code requirements in your area or call: 1-866-766-7489 and request instructions.

The Commonwealth of Massachusetts: The water heaters can be used for domestic hot water or space heating systems, not in a combination of domestic and space heating.

For Venting Manufacturers Requirements, see websites or phone numbers listed below:

Noritz N-Vent	www.noritz.com
Protech FastNSeal & W2	www.protechinfo.com
HeatFab SafTVent	www.heat-fab.com
Z-Flex Z-Vent	www.z-flex.com
Flex-L StaR-34	1-800-561-1980

6. Installation Clearances

⚠ WARNING

Before installing, check for the following:

Install in accordance with relevant building and mechanical codes, as well as any local, state or national regulations, or in the absence of local and state codes, to the National Fuel Gas Code ANSI Z223.1/NFPA 54 – latest edition. In Canada, see NSCNGPIC for detailed requirements.

Item	Check	Illustration
Required Clearances From Heater	• Maintain the following clearance from both combustible and non-combustible materials.	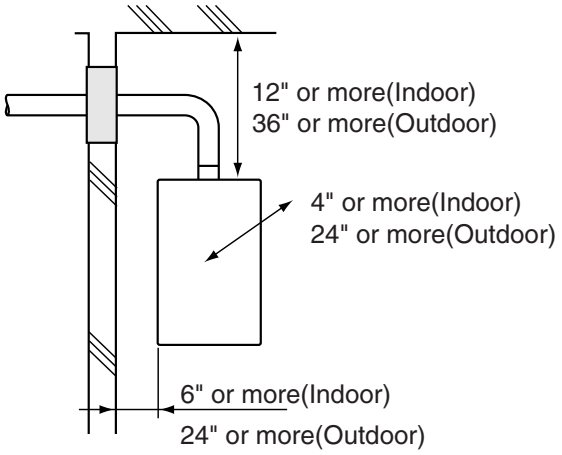
Cooking Equipment	• If the unit will be installed in the vicinity of a permanent kitchen range or stove that has the possibility of generating steam that contains fats or oils, use a dividing plate or other measure to ensure that the unit is not exposed to air containing such impurities. * The dividing plate should be of noncombustible material of a width greater than the water heater.	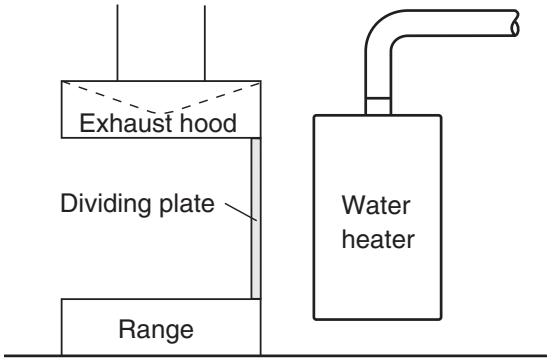
Securing of space for repair/inspection	• If possible, leave 8" or more on either side of the unit to facilitate inspection. • If possible, leave 24" or more in front of the unit to facilitate maintenance and service if necessary. • If possible, leave 3" or more above and below the vent pipe to facilitate inspection and repair if necessary	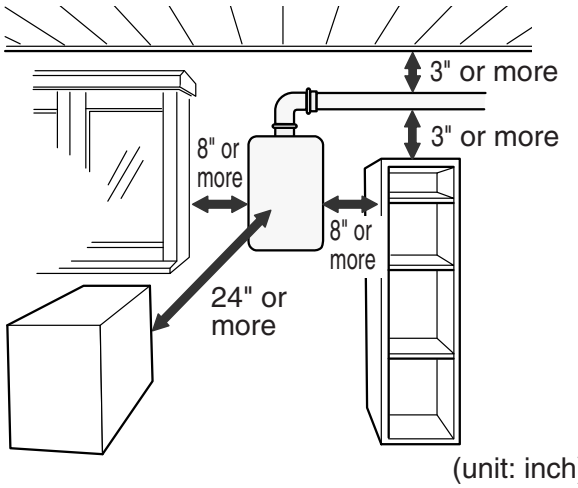

Clearance Requirements from Vent Terminations to Building Openings

* All clearance requirements are in accordance with ANSI Z21.10.3 and the National Fuel Gas Code, ANSI Z223.1 and in Canada, in accordance with NSCNGPIC.

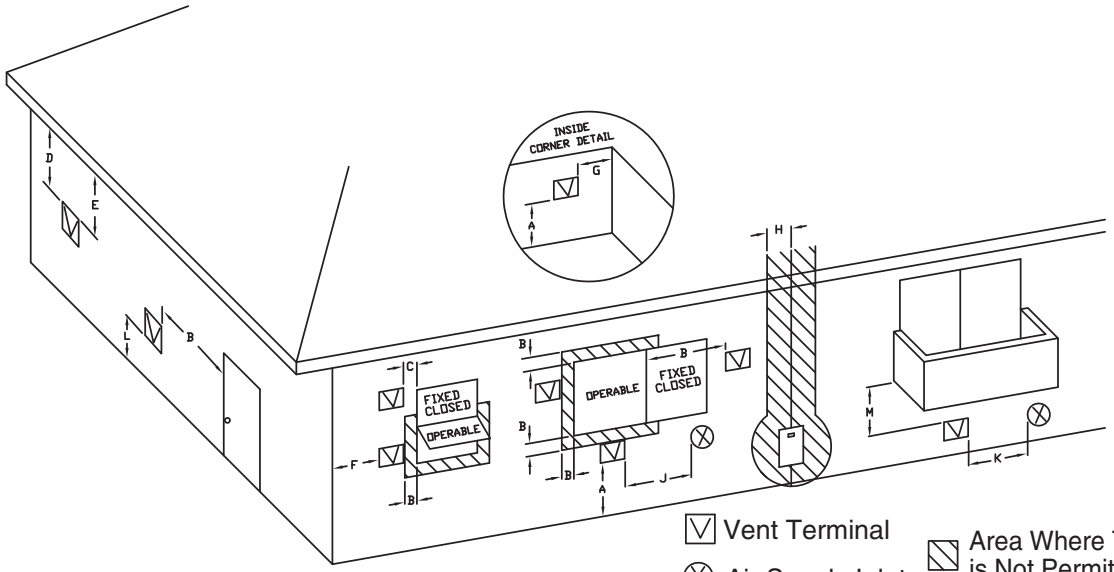

	Clearance	Indoor Installation (See p.9)	Outdoor Installation (See p.9)
A=	Above grade, veranda, porch, deck, or balcony	12" (12")	12" (12")
B=	Window or door that may be opened	4' below or to the side of opening, or 1' above opening (36")	12" (36")
C=	Permanently closed window	*	*
D=	Vertical clearance to ventilated soffit located above the terminal within a horizontal distance of 2 feet from the center of the terminal	*	*
E=	Unventilated soffit	*	*
F=	Outside corner	*	*
G=	Inside corner	*	*
H=	Each side of center line extended above meter/regulator assembly	3' within a height 15' above meter/regulator assembly	3' within a height 15' above meter/regulator assembly
I=	Service regulator vent outlet	3'	3'
J=	Nonmechanical air supply inlet or combustion air inlet to any other appliance	4' below or to the side of opening, or 1' above opening (36")	12" (36")
K=	Mechanical air supply inlet	3' above if within 10' (6')	3' above if within 10' (6')
L=	Above paved sidewalk or paved driveway located on public property	(7' ***)	(7' ***)
M=	Under veranda, porch, deck, or balcony	* (12"- Canada Only****)	* (12"- Canada Only****)

()= indicates clearances required in Canada
*Maintain clearances in accordance with local installation codes and the requirements of the gas supplier
***A vent shall not terminate directly above a sidewalk or paved driveway that is located between two single family dwellings and serves both dwellings.
****Permitted only if veranda,porch,deck,or balcony is fully open on a minimum of two sides beneath the floor.

Clearance Requirements from Vent Terminations to Building Openings

* All clearance requirements are in accordance with ANSI Z21.10.3 and the National Fuel Gas Code, ANSI Z223.1 and in Canada, in accordance with NSCNGPIC.

	Maintain the following clearances to any opening in any building:	Illustration
Vent Clearances When Heater is Installed Indoors	• 4' below, 4' horizontally from, or 1' above any door, operable window, or gravity air inlet into any building. 3' above any forced air inlet within 10'.	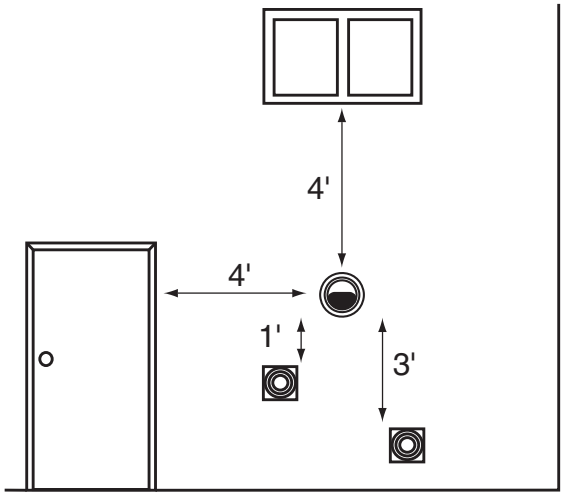
Vent Clearances When Heater is Installed Outdoors With a Vent Cap	• 1' below, 1' horizontally from, or 1' above any door, operable window, or gravity air inlet into any building. 3' above any forced air inlet within 10'. • For outdoor installation, use the outdoor vent cap. If it is necessary to vent above the roof line in an outdoor installation, also use the base of the vent cap for rain protection. 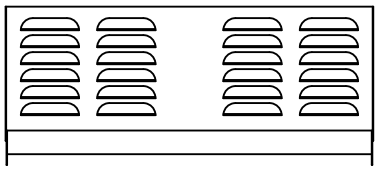 (Noritz vent cap)	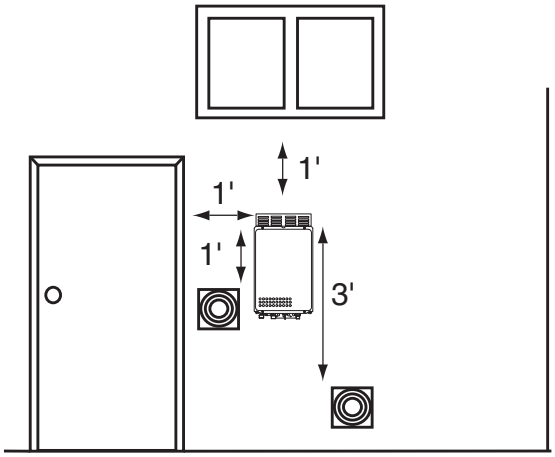

* For Installations in Canada, clearances are as follows: To windows, doors, & gravity air inlets: 36". To forced air inlets: 6'. These clearance requirements hold true for all of the above situations: Indoor, Outdoor w/vent cap.

7. Installation

Securing to the wall

Be sure to do

- The weight of the device will be applied to the wall. If the strength of the wall is not sufficient, reinforcement must be done to prevent the transfer of vibration.
- Do not drop or apply unnecessary force to the device when installing. Internal parts may be damaged and may become highly dangerous.
- Install the unit on a vertical wall and ensure that it is level.

Item	Check	Illustration
Locating Screw Holes	**⚠ CAUTION** • When installing with bare hands, take caution to not inflict injury. • Be careful not to hit electrical wiring, gas, or water piping while drilling holes. 1. Drill a single screw hole, making sure to hit a stud. 2. Insert and tighten the screw and hang the unit by the upper wall mounting bracket. 3. Determine the positions for the remaining four screws (two for the top bracket and two for the bottom), and remove the unit.	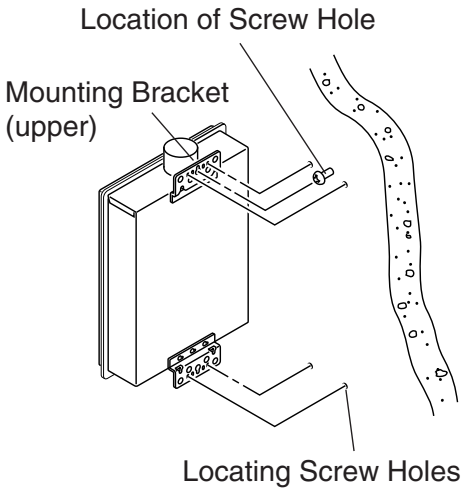
Mounting	4. Drill holes for the remaining four screws. 5. Hang the unit again by the first screw, and then insert and tighten the remaining four screws. 6. Take waterproofing measures so that water does not enter the building from screws mounting the device.	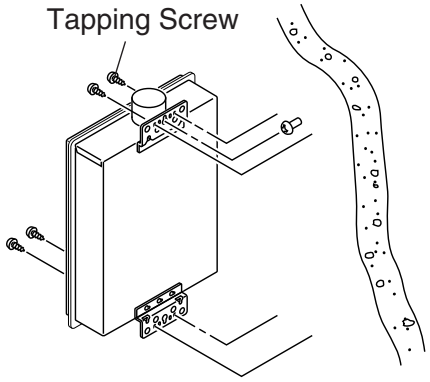
Structure	• Make sure the unit is installed securely so that it will not fall or move due to vibrations or earthquakes.	

8. Vent Pipe Installation (Indoor Installation Only)

⚠ WARNING

Be sure to do

CARBON MONOXIDE POISONING
Follow all vent system requirements in accordance with relevant local or state regulation, or, in the absence of local or state code, in the U.S. to the National Fuel Gas Code ANSI Z233.1/NFPA 54 – latest edition, and in Canada, in accordance with NSCNGPI.

Vent Piping

- Use only UL listed category III vent materials.
- Follow the vent pipe manufacturer's installation instructions.

Pipe diameter	5"

No. of Elbows	Max. Straight Vent Length
3	15'
2	30'
1	45'

- Make the vertical section of the exhaust vent as short as possible.
- Maintain the same vent pipe diameter from the heater flue to the vent termination.

Clearances

Manufacturer and Product	Enclosed		Unenclosed	
	Hor.	Vert.	Hor.	Vert.
Noritz N-Vent	10" (sides) 15"(top) 6"(bottom)	6"	3"	3"
Protech FasNSeal	Noncombustible Enclosure		3"	3"
Protech FasNSeal W2	6"	6"	3"	3"
HeatFab SafTVent	6"	6"	2"	2"
Z-Flex Z-Vent	8"	4"	1"	1"

These clearances are subject to change.
Refer to the UL listing for the proper clearances.

- The first vertical run from the top of the heater should be no longer than 3'.
- Make sure vent pipe is gas tight and will not leak. Use silicon sealant wherever necessary.
- Do not common vent or connect more than one appliance to this venting system.
- The total vent length including horizontal & vertical vent runs should be no less than 3'.
- Do not place any dangerous objects at the end of the exhaust vent and check that vent pipe is not blocked in any way.
- Steam (smoke) or water drops may come out from the end of the exhaust pipe. Select the location for the end of the vent so that steam is not visible, and the vent is not wet with dripping water.
- If snow is expected to accumulate, take care the end of the pipe is not covered with snow or hit by falling lumps of snow.
- Consult the vent pipe manufacturer's installation instructions for chimney connections.

Appliance Adapters

- Use the following adapters to connect the unit to the venting system.

Manufacturer and Product	Part No.
Protech FasNSeal	FSAA5
HeatFab SafTVent	9501NOR
Z-Flex Z-Vent	2SVWA05

Horizontal Vent Termination

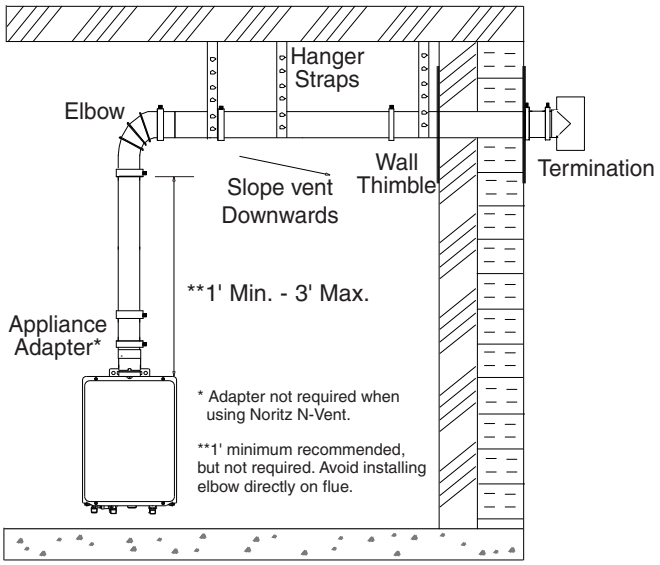

- Terminate at least 12" above grade or above snow line.
- Terminate at least 7' above a public walkway, 6' from the combustion air intake of any appliance, and 3' from any other building opening, gas utility meter, service regulator etc.
- Terminate at least 3' above any forced air inlet within 10', 4' below, 4' horizontally from or 1' above any door, window, or gravity air inlet into any building per National Fuel Gas Code ANSI Z223.1/NFPA 54.
- Slope the horizontal vent 1/4" downwards for every 12".
- Use a condensation drain if necessary.
- In the Commonwealth of Massachusetts a carbon monoxide detector is required for all side wall horizontally vented gas fuel equipment. Please refer to Technical Bulletin TB 010606 for full installation instructions.

Vertical Vent Termination

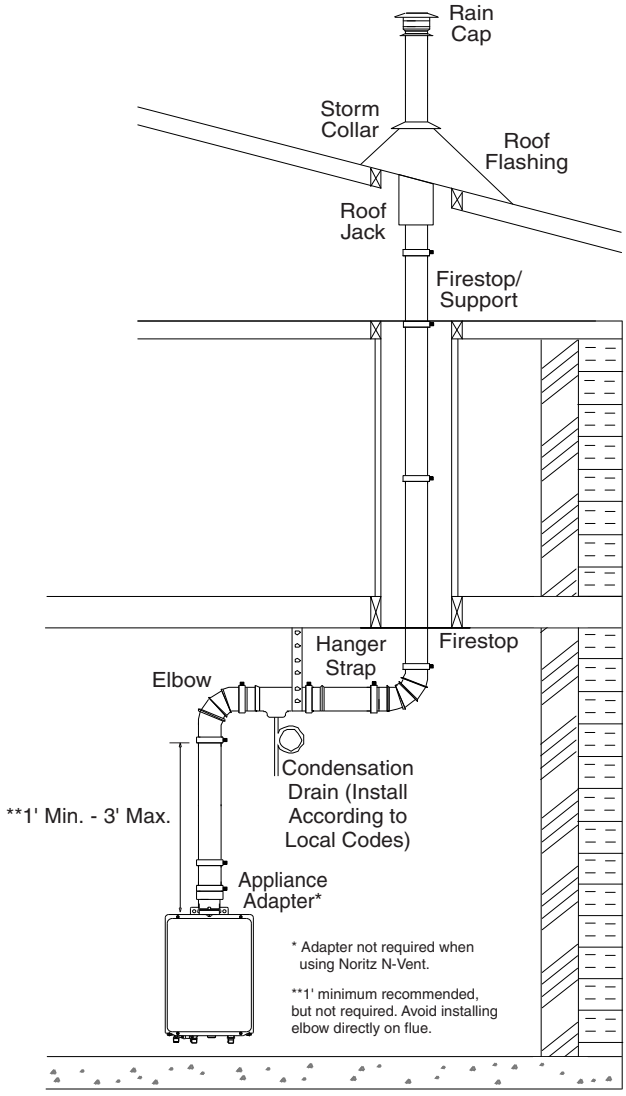

- Terminate at least 6' from the combustion air intake of any appliance, and 3' from any other building opening, gas utility meter, service regulator etc.
- Enclose exterior vent systems below the roof line to limit condensation and protect against mechanical failure.
- When the vent penetrates a floor or ceiling and is not running in a fire rated shaft, a firestop and support is required.
- Terminate the vent system at least 2' above, but not more than 6' above the roof line, or according to the vent pipe manufacturer's instructions.
- Terminate the vent system at least 2' above any portion of a building located within 10' horizontally.
- Provide vertical support every 12' or as required by the vent pipe manufacturer's instructions.
- Slope the horizontal vent 1/4" for every 12" towards the drain tee.
- Do not vent straight upwards.
  Always have a horizontal section of venting.
- Install a condensation drain in the horizontal section of the venting.

Combustion Air	Supply combustion air to the units as per the National Fuel Gas Code, ANSI Z223.1 and in Canada, in accordance with NSCNGPIC.

- Provide two permanent openings to allow circulation of combustion air.
- Make each opening 380 square inches if they provide indoor air, and 100 square inches for outdoor air.
- If the unit is installed in a mechanical closet, provide a 24" clearance in front of the unit to the door.
- If combustion air will be provided through a duct, size the duct to provide 100 cubic feet of fresh air per minute.

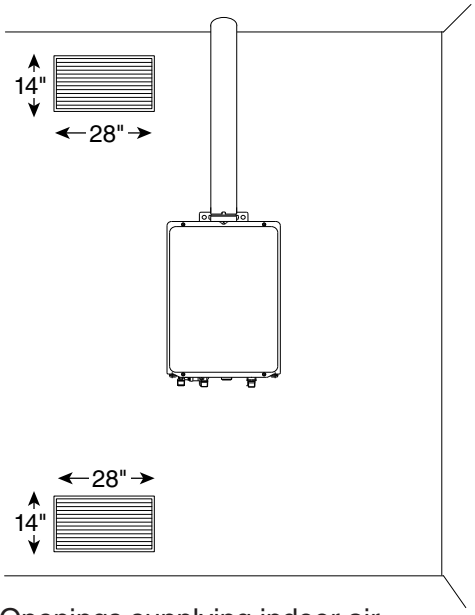

Openings supplying indoor air

9. Gas Piping

Follow the instructions from the gas supplier.

The appliance and its individual shutoff valve must be disconnected from the gas supply piping system during any pressure testing of that system at test pressures in excess of ½ psig (3.5 kPa).
The Appliance must be isolated from the gas supply piping system by closing its individual manual shutoff valve during any pressure testing of the gas supply piping system at test pressures equal to or less than ½ psig (3.5 kPa).

The appliance and its gas connections must be leak tested before placing the appliance in operation.

The inlet gas pressure must be within the range specified. This is for the purposes of input adjustment.

In order to choose the proper size for the gas line, consult local codes or the National Fuel Gas Code ANSI Z223.1.

Gas Pressure
Size the gas line according to total btuh demand of the building and length from the meter or regulator so that the following supply pressures are available even at maximum demand:

Natural Gas Supply Pressure
Min. 5" WC
Max. 10.5" WC

LP Gas Supply Pressure
Min. 10.5" WC
Max. 14" WC

Gas Meter
Select a gas meter capable of supplying the entire btuh demand of all gas appliances in the building.

Gas Connection
- Do not use piping with a diameter smaller than the inlet diameter of the water heater.
- Gas flex lines are not recommended unless they are rated for 380,000 btuh.
- Install a gas shutoff valve on the supply line.
- Use only approved gas piping materials.

Measuring Gas Pressure

In order to check the gas supply pressure to the unit, a tap is provided on the gas inlet. Remove the hex head philips screw from the tap, and connect a manometer using a silicon tube.

In order to check the gas manifold pressure, a pair of taps are provided on the gas valve inside the unit. The pressure can be checked either by removing the hex head philips screw and connecting a manometer with a silicon tube, or by removing the 1/8" NPT screw with an allen wrench and connecting the appropriate pressure gauge.

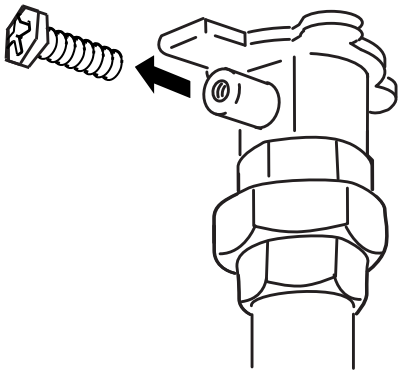

Sample Gas Line

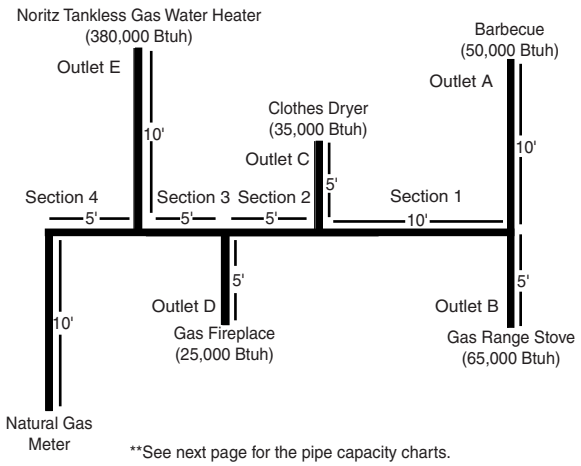

**See next page for the pipe capacity charts.

Instructions

1. Size each outlet branch starting from the furthest using the Btuh required and the length from the meter.
2. Size each section of the main line using the length to the furthest outlet and the Btuh required by everything after that section.

Sample Calculation

Outlet A: 45' (Use 50'), 50,000 Btuh requires 1/2"
Outlet B: 40', 65,000 Btuh requires 1/2"
Section 1: 45' (Use 50'), 115,000 Btuh requires 3/4"
Outlet C: 30', 35,000 Btuh requires 1/2"
Section 2: 45' (Use 50'), 150,000 Btuh requires 3/4"
Outlet D: 25' (Use 30'), 25,000 Btuh requires 1/2"
Section 3: 45' (Use 50'), 175,000 Btuh requires 1"
Outlet E: 25' (Use 30'), 380,000 Btuh requires 1-1/4"
Section 4: 45' (Use 50'), 555,000 Btuh requires 1-1/4"

Gas Line Sizing for a Noritz Tankless Gas Water Heater

Adapted from UPC 1997

Maximum **Natural Gas** Delivery Capacity in Cubic Feet per Hour (0.60 Specific Gravity, 0.5" WC Pressure Drop)

Pipe Size	Length in Feet										
	10'	20'	30'	40'	50'	60'	70'	80'	90'	100'	125'
1/2"	174	119	96	82	73	66	61	56	53	50	44
3/4"	363	249	200	171	152	138	127	118	111	104	93
1"	684	470	377	323	286	259	239	222	208	197	174
1 1/4"	1404	965	775	663	588	532	490	456	428	404	358
1 1/2"	2103	1445	1161	993	880	798	734	683	641	605	536
2"	4050	2784	2235	1913	1696	1536	1413	1315	1234	1165	1033
2 1/2"	6455	4437	3563	3049	2703	2449	2253	2096	1966	1857	1646
3"	11,412	7843	6299	5391	4778	4329	3983	3705	3476	3284	2910
3 1/2"	16,709	11,484	9222	7893	6995	6338	5831	5425	5090	4808	4261
4"	23,277	15,998	12,847	10,995	9745	8830	8123	7557	7091	6698	5936

Contact the Gas Supplier for Btu/Cubic Ft. of the Supplied Gas. 1000 BTU/Cubic Ft. is a Typical Value

Maximum **Liquified Petroleum** (Undiluted) Delivery Capacity in Thousands of Btuh (0.5" WC Pressure Drop)

Pipe Size	Length in Feet												
	10'	20'	30'	40'	50'	60'	70'	80'	90'	100'	125'	150'	200'
1/2"	275	189	152	129	114	103	96	89	83	78	69	63	55
3/4"	567	393	315	267	237	217	196	185	173	162	146	132	112
1"	1071	732	590	504	448	409	378	346	322	307	275	252	213
1 1/4"	2205	1496	1212	1039	913	834	771	724	677	630	567	511	440
1 1/2"	3307	2299	1858	1559	1417	1275	1181	1086	1023	976	866	787	675
2"	6221	4331	3465	2992	2646	2394	2205	2047	1921	1811	1606	1496	1260

** For reference only. Please consult gas pipe manufacturer for actual pipe capacities.

Maximum Capacity of Flex TracPipe® in Cubic Feet per Hour of **Natural Gas** (0.60 Specific Gravity, 0.5" WC Pressure Drop)

Pipe Size	Length in Feet											
	10'	20'	30'	40'	50'	60'	70'	80'	90'	100'	150'	200'
3/4"	206	147	121	105	94	86	80	75	71	67	55	48
1"	383	269	218	188	168	153	141	132	125	118	94	82
1 1/4"	614	418	334	284	251	227	209	194	181	171	137	116
1 1/2"	1261	888	723	625	559	509	471	440	415	393	320	277
2"	2934	2078	1698	1472	1317	1203	1114	1042	983	933	762	661

Maximum Capacity of Flex TracPipe® in Thousands of Btuh **Liquified Petroleum** (0.5" WC Pressure Drop)

Pipe Size	Length in Feet											
	10'	20'	30'	40'	50'	60'	70'	80'	90'	100'	150'	200'
3/4"	325	232	191	166	149	136	126	118	112	106	87	76
1"	605	425	344	297	265	241	222	208	197	186	143	129
1 1/4"	971	661	528	449	397	359	330	307	286	270	217	183
1 1/2"	1993	1404	1143	988	884	805	745	696	656	621	506	438
2"	4638	3285	2684	2327	2082	1902	1761	1647	1554	1475	1205	1045

** For reference only. Please consult gas pipe manufacturer for actual pipe capacities.
TracPipe® is a registered trademark of Omega Flex.

Maximum Capacity for Gas Flex Connectors in Cubic Feet per Hour of **Natural Gas** (0.60 Specific Gravity, 0.5" WC Pressure Drop)

Pipe Size	Length in Inches					
	12"	24"	36"	48"	60"	72"
1/2"	180	150	125	106	93	86
3/4"	—	290	255	215	197	173
1"	—	581	512	442	397	347
1 1/4"	—	1470	1200	1130	960	930

Maximum Capacity for Gas Flex Connectors in Thousands of Btuh **Liquified Petroleum** (0.5" WC Pressure Drop)

Pipe Size	Length in Inches					
	12"	24"	36"	48"	60"	72"
1/2"	288	240	200	169	149	137
3/4"	—	465	409	344	315	278
1"	—	930	825	708	638	556
1 1/4"	—	2352	1920	1808	1536	1488

** For reference only. Please consult gas pipe manufacturer for actual pipe capacities.

10. Water Piping

Installation and service must be performed by a qualified plumber. In the Commonwealth of Massachusetts, this product must be installed by a licensed plumber or gas fitter in accordance with the Massachusetts Plumbing and Fuel Gas Code 248 CMR Sections 2.00 and 5.00. Observe all applicable codes.

This appliance suitable for potable water and space heating applications. Do not use this appliance if any part has been underwater. Immediately call a qualified service technician to inspect the appliance and replace any part of the control system and gas control which has been under water.

If the water heater is installed in a closed water supply system, such as one having a backflow preventer in the cold water supply line, means shall be provided to control thermal expansion. Contact the water supplier or a local plumbing inspector on how to control this situation.

A pressure relief valve must be installed near the hot water outlet that is rated in accordance with and complying with either The Standard for Relief Valves and Automatic Shutoff Devices for Hot Water Supply Systems, ANSI Z21.22, or The ANSI/ASME Boiler and Pressure Vessel Code, Section IV (Heating Boilers). This pressure relief valve must be capable of an hourly Btu rated temperature steam discharge of 380,000 Btuh. Multiple valves may be used. The pressure relief capacity must not exceed 150 psig. No valve shall be placed between the relief valve and the water heater. The relief valve must be installed such that the discharge will be conducted to a suitable place for disposal when relief occurs. No reducing coupling or other restriction may be installed in the discharge line. The discharge line must be installed to allow complete drainage of both the valve and the line. If this unit is installed with a separate storage vessel, the separate vessel must have its own temperature and pressure relief valve. This valve must also comply with The Standard for Relief Valves and Automatic Gas Shutoff Devices for Hot Water Supply Systems, ANSI Z21.22. (in the U.S. only). A temperature relief valve is not required, but if one is used, do not install the valve with the probe directly in the flow of water. This may cause unwarranted discharge of the valve.

Piping and components connected to the water heater shall be suitable for use with potable water.
Toxic chemicals, such as those used for boiler treatment, shall not be introduced into the potable water.
A water heater used to supply potable water may not be connected to any heating system or components previously used with a nonpotable water heating appliance.
When water is required in one part of the system at a higher temperature than in the rest of the system, means such as a mixing valve shall be installed to temper the water to reduce the scald hazard.

- Flush water through the pipe to clean out metal powder, sand and dirt before connecting it.
- Perform the following insulation measures for prevention of freezing.
  - Take appropriate heat insulation measures (e.g., wrapping with heat insulation materials, using electric heaters) according to the climate of the region to prevent the pipe from freezing.
  - Make sure that there are no water leaks from the cold and hot water supply pipes, then insulate the pipes completely.
  - Be sure to also completely insulate the water supply valve and the cold and hot water connections on the water heater (refer to the figure on the right).
  - Do not cover the water drain plug with insulation so that water in the pipe can be drained. (Refer to the figure in the right.)

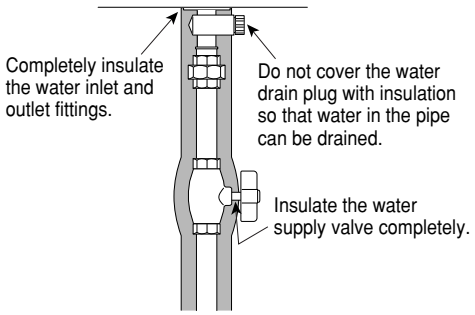

- Use a union coupling or flexible pipe for connecting the pipes to reduce the force applied to the piping.
- Do not use piping with a diameter smaller than the coupling.
- When feed water pressure is too high, insert a depressurizing valve, or take water hammer prevention measure.
- Avoid using joints as much as possible to keep the piping simple.
- Avoid piping in which an air holdup can occur.
- If installing the unit on a roof:
- About lower-level hot water supply
  If the unit is installed on a roof to supply water to the levels below, make sure that the water pressure supplied to the unit does not drop below 29 psi. It may be necessary to install a pump system to ensure that the water pressure is maintained at this level.
  Check the pressure before putting the unit into operation.
  Failure to supply the proper pressure to the unit may result in noisy operation, shorter lifetime of the unit, and may cause the unit to shut down frequently.

Supply water piping

- Do not use PVC, iron, or any piping which has been treated with chromates, boiler seal or other chemicals.
- Mount a check valve and a shut off valve (near the inlet).
- In order for the client to use the water heater comfortably, 98.1 to 491 kPa (14 to 70 PSI) of pressure is needed from the water supply. Be sure to check the water pressure. If the water pressure is low, the water heater cannot perform to its full capability, and may become a source of trouble for the client.

Drain piping

- Expansion water may drop from the pressure prevention device and wet the floor. If necessary, provide drain piping or use a drain hose to remove the water.

Hot water piping

- Do not use lead, PVC, iron or any piping which has been treated with chromates, boiler seal or other chemicals.
- The longer the piping, the greater the heat loss. Try to make the piping as short as possible.
- Use mixing valves with low water resistance. Use shower heads with low pressure loss.
- If necessary, use a pump or other means to ensure that the supply water pressure to the inlet of the heater does not fall below 29 PSI when the maximum amount of water is being demanded. Also install a pressure meter on the inlet. If this is not done, local boiling will occur inside the water heater causing abnormal sounds and decreasing the durability of the heat exchanger.

Water Treatment

If this water heater will be installed in an application where the supply water is hard, the water must be treated with either a water softener, which removes the hardness, or by using sequestering agents, such as the Noritz Scale Shield, that reduce the amount of scale deposits. Refer to the below tables for suggested treatment and maintenance measures to be taken based on the water hardness level. Damage to the water heater as a result of water in excess of 12 gpg (200 mg/L) of hardness is not covered by the Noritz America Limited Warranty.

Note: When installing a water softener, consult with the manufacturer for proper sizing and installation guidelines; the below diagram is for reference only. For more information about Scale Shield, contact Noritz America at 866-766-7489.

Residential Use Treatment Guidelines

Type of Water	Hardness Level	Treatment Device	Flush Frequency*
Soft	0-1 gpg (0-17 mg/L)	None	None
Slightly Hard	1-3 gpg (17-51 mg/L)	None	None
Moderately Hard	3-7 gpg (51-120 mg/L)	ScaleShield	Once a Year
Hard	7-10 gpg (120-171 mg/L)	ScaleShield	Once a Year
Very Hard	10-14 gpg (171-239 mg/L)	Water Softener	Softener Required
Extremely Hard	> 14 gpg (> 239 mg/L)	Water Softener	Softener Required

* Install Noritz Isolation Valves to allow for flushing.

Commercial Use Treatment Guidelines

Type of Water	Hardness Level	Treatment Device	Flush Frequency*
Soft	0-1 gpg (0-17 mg/L)	None	None
Slightly Hard	1-3 gpg (17-51 mg/L)	None	None
Moderately Hard	3-7 gpg (51-120 mg/L)	Water Softener Suggested	Once a Year**
Hard	7-10 gpg (120-171 mg/L)	Water Softener Suggested	Twice a Year**
Very Hard	10-14 gpg (171-239 mg/L)	Water Softener	Softener Required
Extremely Hard	> 14 gpg (> 239 mg/L)	Water Softener	Softener Required

*Install Noritz Isolation Valves to allow for flushing.
**Flushing is required if a water softener is not installed.

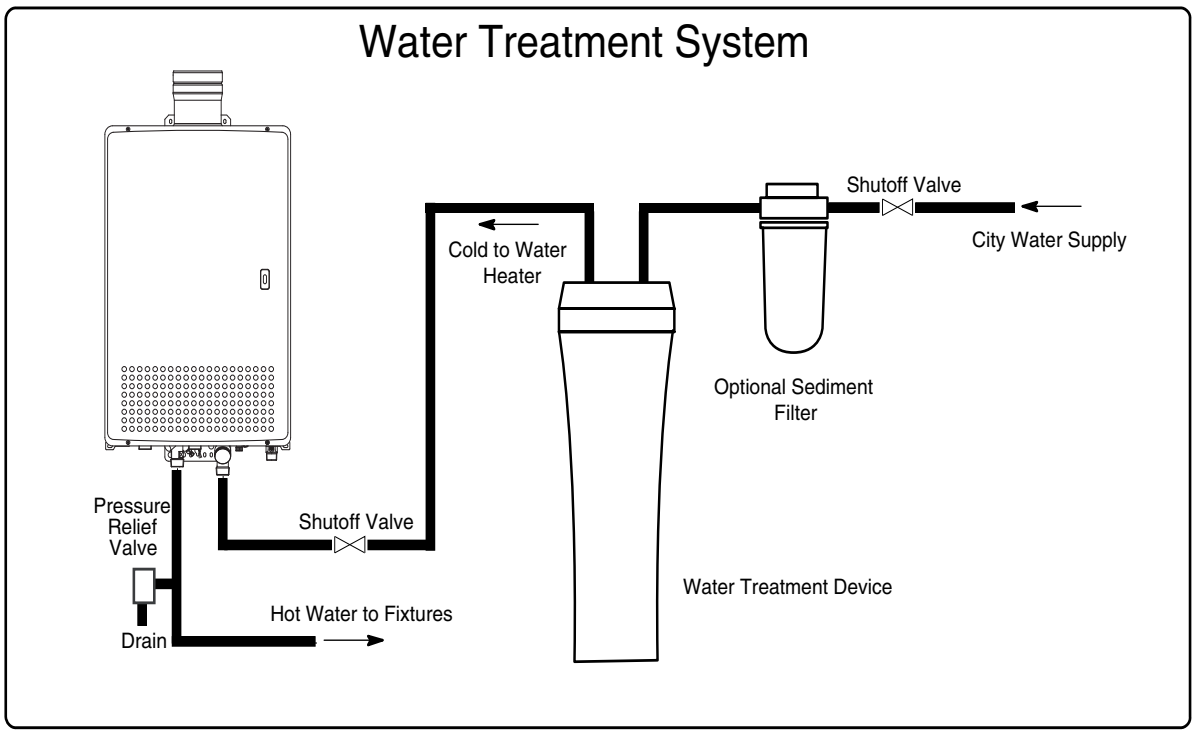

11. Plumbing Applications

Recirculation System

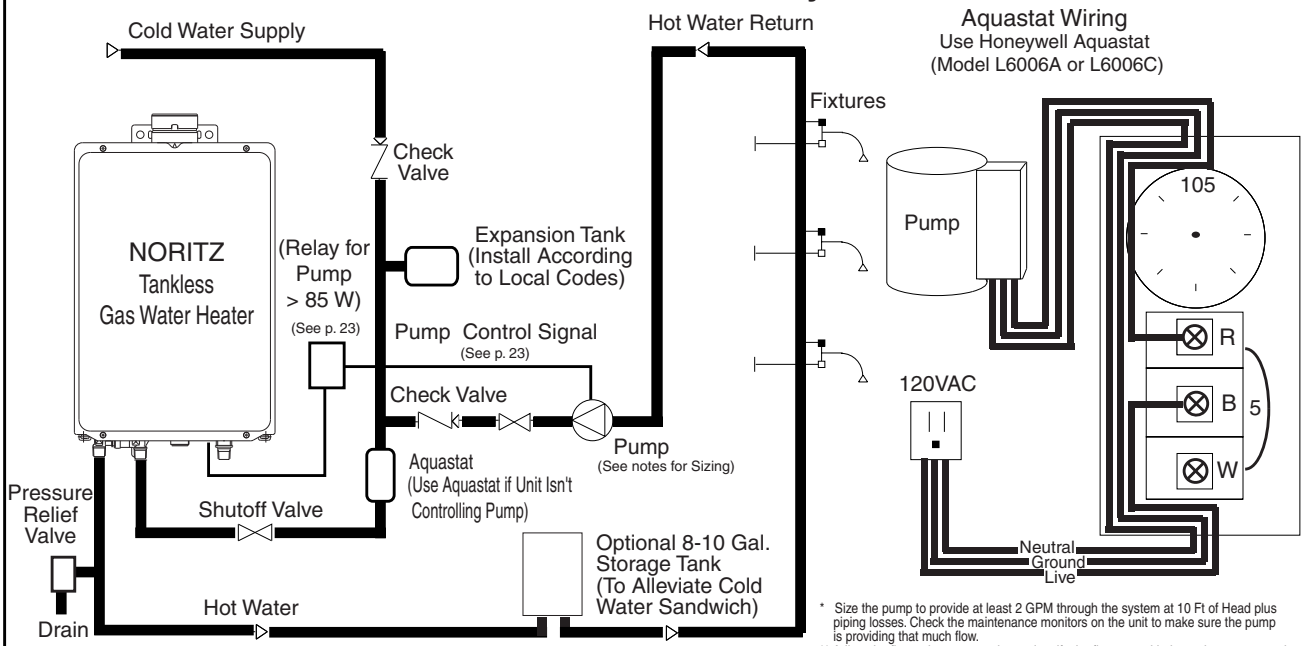

* Size the pump to provide at least 2 GPM through the system at 10 Ft of Head plus piping losses. Check the maintenance monitors on the unit to make sure the pump is providing that much flow.
** Adjust the flow using a gate valve and verify the flow rate with the maintenance monitors.

Heating System

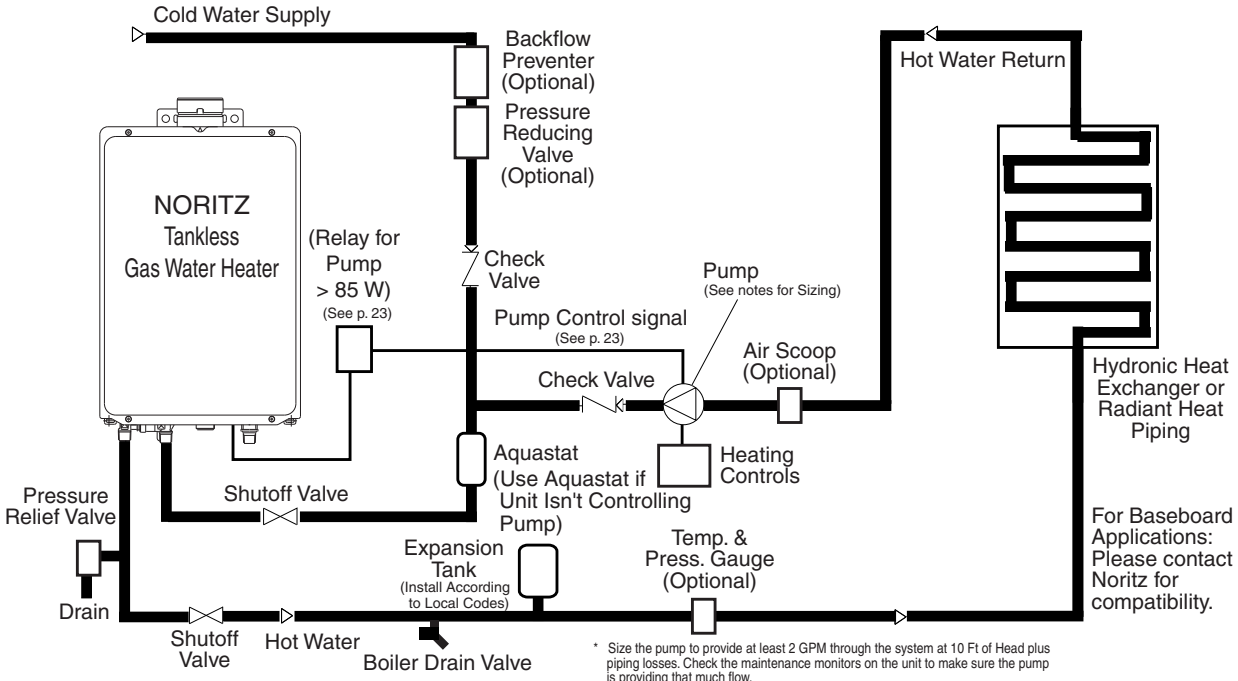

* Size the pump to provide at least 2 GPM through the system at 10 Ft of Head plus piping losses. Check the maintenance monitors on the unit to make sure the pump is providing that much flow.
** Adjust the flow using a gate valve and verify the flow rate with the maintenance monitors.

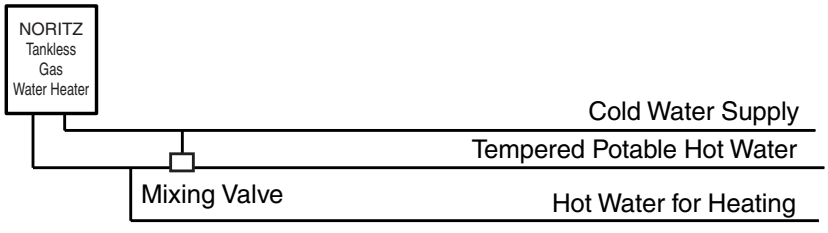

For Space Heating Purposes:
If the system requires water for space heating at a higher temperature than for other uses, means such as a mixing valve shall be provided to temper the water for the other uses to help prevent scalding.

12. Electrical Wiring

Consult a qualified electrician for the electrical work.



Do not connect electrical power to the unit until all electrical wiring has been completed.

This appliance must be electrically grounded in accordance with local codes, or in the absence of local codes, with the National Electrical Code, ANSI/NFPA 70. In Canada, the latest CSA C22.1 Electrical Code.

Caution: Label all wires prior to disconnection when servicing controls. Wiring errors can cause improper and dangerous operation.

Verify proper operation after servicing.

Field wiring to be performed at time of appliance installation.

⚠ WARNING

Electrical Shock Hazard
Do not turn power on until electrical wiring is finished. Disconnect power before servicing.
Failure to do so may result in death or serious injury from electrical shock.

- The electrical supply required by the water heater is 120VAC at 60 Hz.
  The power consumption may be up to 355W or higher if using optional accessories.
  Use an appropriate circuit.
- Do not disconnect the power supply when not in use. When the power is off, the freeze prevention in the water heater will not activate, resulting in possible freezing damage.

- Do not let the power cord contact the gas piping.

Tie the redundant power cord outside the water heater. Putting the redundant length of cord inside the water heater may cause electrical interference and faulty operation.

Ground

- To prevent electrical shock, provide a ground with resistance less than 100Ω. An electrician should do this work.
- A grounding screw is provided on the back in the junction box.

Do not connect the ground to the city water or gas piping. Do not tie the ground to a telephone line.

Breaker Installation

- Mount a device which shuts off the electrical path automatically (leakage breaker) when electrical leakage is detected.

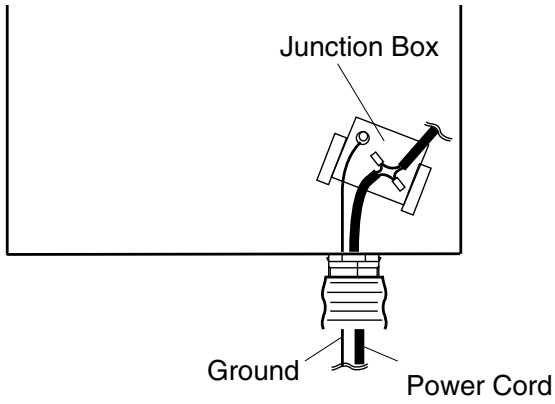

1. Unscrew the junction box and slide it out of the unit.
2. Push the power cord through the bottom of the unit.
3. Connect the live and neutral wires to the black and white wire in the junction box.
4. Screw the ground wire to the ground screw on the back in the junction box and replace the junction box.

⚠ CAUTION

Electrostatic discharge can affect electronic components. Take precautions to prevent electrostatic discharges from personnel or hand tools during the water heater installation and servicing to protect product's electronic control.

Remote Controller

• Applicable Model

Noritz Tankless Gas Water Heater	
Remote controller	RC-7649M

Install the remote controller according to the instructions in the Installation Guide (p. 31).

- The Noritz Tankless Gas Water Heater can be programmed so that it will default to one of four temperatures if the remote controller is removed (180, 140, 130, 120°F). To change the default temperature, the remote controller must be initially installed, and removed after programming.

* Changing the default temperature setting:

1. Within the first ten minutes of connecting electrical power to the unit, but before pressing the Power On/Off button, hit the up [▲] or down [▼] button on the remote controller. This will put the unit into maintenance writer mode. If pressing either of these buttons does not put the unit into maintenance writer mode, unplug the unit for sixty seconds and try again.
2. The maintenance monitor item number will flash on the display. (the initial item number will be “99”).
3. The up [▲] and down [▼] buttons can be used to change the maintenance writer item number.
4. Choose a temperature from the chart below and set the 14 and 15 maintenance writers according to the chart. Pressing the Flow Meter Alarm Set button for 0.5 seconds will switch the indicated item number from “OFF” to “ON” or “ON” to “OFF”. If the Priority lamp is flashing when an item number is displayed, this indicates an “ON” setting for that item number, and if the Priority lamp is off, the item number is off.
   *Do not change the other item numbers. This may cause a fault in the water heater.
5. After setting the 14 and 15 item numbers for the desired temperature, press and hold the up [▲] and down [▼] buttons together for five seconds to confirm the new settings. The remote controller will emit a tone when the settings are confirmed. If this is not done, the unit will not put the setting changes into effect. After confirming the setting, remove the remote controller to initiate the default temperature setting.

Note: The setting changes can be cancelled by pressing the Power On/Off button before confirming the settings, or if the unit is left alone for ten minutes without confirming the settings. If the default setting needs to be changed again, disconnect the electrical power to the unit, reconnect it and follow this procedure again.

Temp. \ Item No.	14	15
180°F	ON	ON
140°F	OFF	ON
130°F	ON	OFF
120°F*	OFF	OFF

* Factory Default Setting

⚠ WARNING

- When changing the temperature, make sure to confirm with the customer that the temperature of the hot water will be very high and that there is a risk of scalding.
- Water temperatures above 125°F can cause severe burns or death from scalding.

Connecting Remote Controller Cord to Unit

- Keep the remote controller cord away from the freeze prevention heaters in the unit.
- Tie the redundant cord outside the water heater. Do not put the extra length inside the equipment.
- The remote controller cord can be extended up to 300' with 18AWG wire.
- Use a Y type terminal with a resin sleeve. (Without the sleeve, the copper wire may corrode and cause problems).
- Be sure to hand tighten when screwing to the terminal block. Power tools may cause damage to the terminal block.

Remote controller cord

- For extensions, a 26' cord can be purchased (Part # RC-CORD26) or use 18AWG wire.
- Install according to the National Electrical Code and all applicable local codes.

1. Leave enough slack so that the remote controller cord will not be damaged if the unit is removed from the wall.
2. Remove the front cover of the heater (4 screws).
3. Pass the remote controller cord through the wiring throughway and into the unit.
4. Connect the Y terminals at the end of the remote controller cord to the terminal block.
5. Secure the remote controller cord with a clamp.
6. Replace the front cover.

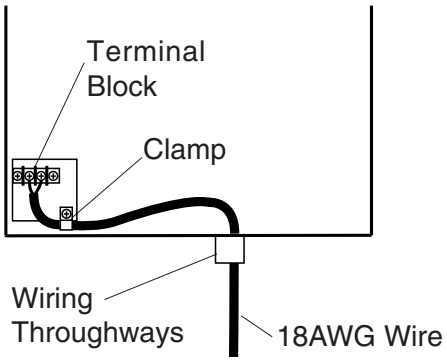

Pump Wiring

* This feature is not available when using the Quick Connect Multi System feature.

Connecting the pump control wire

1. Leave enough slack so that the pump control wires will stay connected if the unit is removed from the wall.
2. Remove the front cover of the heater (4 screws).
3. Cut off the connector at the end of the pump control wires.
4. Wire the pump control wires through the wiring throughway and connect them to the wiring inside the pump (this will be the power supply for the pump, do not also connect 120VAC to the pump).
   If a large pump is being used (greater than 85W) use the voltage from these wires as the signal to close a normally open relay through which 120VAC will be supplied directly from a wall circuit to the pump.
5. Replace the front cover.

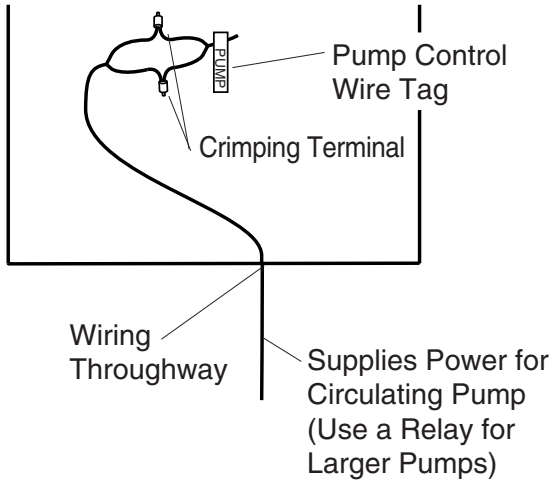

Relay connection with larger pumps (>85 W)

1. Locate and prepare the pump control wires as described above.
2. Choose a suitable installation location for the relay where it will be protected from moisture.
3. Connect the pump control wires from the heater to the signal input on the relay.
4. Cut one of the electrical supply leads and wire it across the open terminals of the relay.
5. Secure all connections and replace the front cover of the heater.

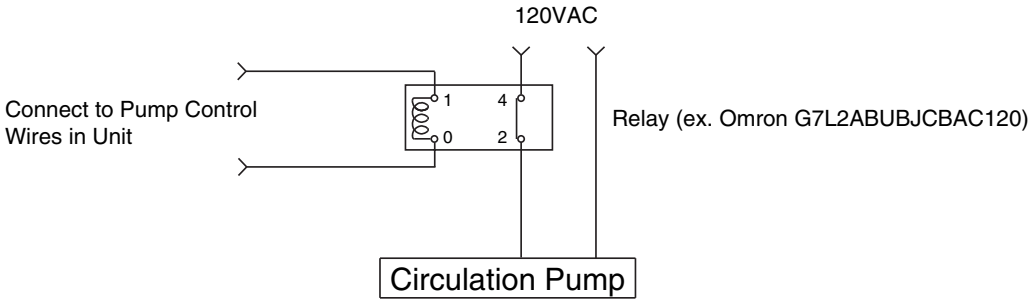

Connecting Quick Connect Cord

For Quick Connect Multi System Installation use a Quick Connect Cord (sold separately).

Caution

The wire coloring on the Quick Connect Cord will not be the same as the wire coloring of the connection plug inside the unit.

* The remote controller can be connected to either unit A or B.

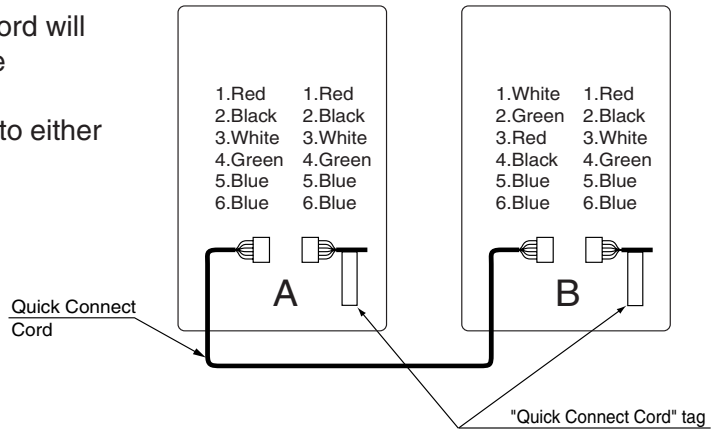

Connecting the Quick Connect Cord to the two units.

1. Turn off the power.
2. Remove the front cover of the heater (4 screws).
3. Pass the Quick Connect Cord through the wiring throughway and into the unit.
4. Plug the connector on the Quick Connect Cord to the receptacle inside the unit.
5. Attach the ground wire of the Quick Connect Cord to the terminal block fixing plate. (If the ground wire is not attached, electrical noise may cause problems).
6. Secure the Quick Connect Cord with a clamp.
7. Replace the front cover.

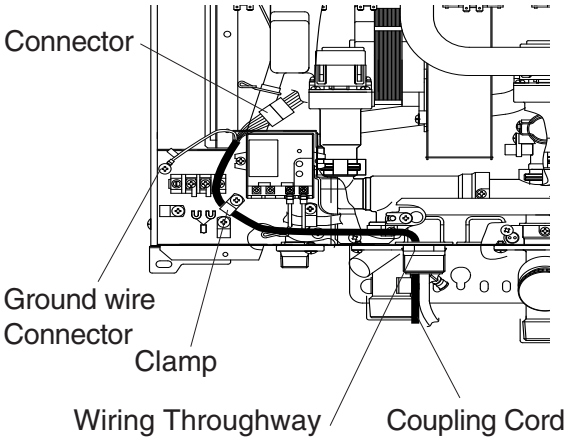

13. Maintenance

Periodically check the following to ensure proper operation of the water heater.

- The venting system must be examined periodically by a qualified service technician to check for any leaks or corrosion.
- The burner flame must be checked periodically for a proper blue color and consistency.
- If the flame does not appear normal, the burner may need to be cleaned.
- If the burner needs to be cleaned, it must be performed by a qualified service technician.
- Do not obstruct the flow of combustion and ventilation air.
- The pressure relief valve must be operated once a year to ensure that it is functioning properly and there is no obstruction. Turn the power off to the unit before opening the relief valve, and make sure that water draining out of the valve will not cause any damage.
- If the relief valve discharges periodically, it may be due to thermal expansion in a closed water system. Contact the water supplier or a local plumbing inspector on how to correct this situation. Do not plug the relief valve.
- See Operation Manual for further maintenance.

Warning: There is a scald potential if the output temperature is set too high.

Should overheating occur, or the gas supply fail to shut off, turn off the manual gas control valve to the appliance. Do not use this appliance if any part has been under water. Immediately call a qualified service technician to inspect the appliance and to replace any part of the control system and any gas control which has been under water.

Periodically check and clean the filter inside the cold water inlet of the unit.

14. Trial Operation

The installer should test operate the unit, explain to the customer how to use the unit, and give the owner this manual before leaving the installation.

- Preparation ..... (1) Open a hot water fixture to confirm that water is available, and then close the fixture.
  (2) Open the gas supply valve.
  (3) Turn on the power supply. Using the remote controller, turn on the Power On/Off button (the Operation lamp will turn on).

(1) Open a hot water fixture and confirm that the Burner On lamp comes on, and that hot water is being produced. (If necessary, repeat until the air in the gas piping is bled out).
   * White smoke may be noticed from the exhaust vent during cold weather. However, this is not a malfunction of the unit.
   * If an “11” error code appears on the remote controller, turn the unit off and then back on again, and then open a hot water fixture again.

(2) Change the temperature setting on the remote controller and check that the water temperature changes.

- If the water heater does not operate normally, refer to “Troubleshooting” in the Operation Manual.

* After the trial operation, clean the filter in the cold water inlet.

<If installed with a quick connect multi-system>

- Turn the system power ON with the remote controller.
- Slowly open a hot water fixture and check that the units ignite sequentially. Check to see that the hot water temperature is the same as the temperature displayed on the remote controller (*1)

* If both units do not ignite, switch which unit will ignite first by pressing the Max. or Min. Mani-fold Pressure Set Button on the circuit board. (*2)

Unit A Ignites Unit B Doesn't Ignite	Press Max. or Min. Manifold Pressure Set Button on Unit B →	Unit A Doesn't Ignite Unit B Ignites

* If an 11 or F11 error code flashes on the remote controller, hit the Power Button on the remote controller off and on 2 -3 times.
* If (*1) and (*2) cannot be done, the Quick Connect Cord may not be properly connected. Check that the cord is properly connected.

⚠ CAUTION

Handling after trial operation

- If the unit will not be used immediately, close off all gas and water shutoff valves, drain all of the water out of the unit and the plumbing system to prevent the unit and system from freezing, and bleed the gas out of the gas line.

  Freezing is not covered by the warranty.

⚠ WARNING

A fire or explosion may result if these instructions are not followed, which may cause lose of life, personal injury or property damage.

Lighting Instructions

This water heater does not have a pilot. It is equipped with an ignition device that automatically lights the burner.

Do not try to light the burner by hand.

1. Read the safety information in the installation manual or on the front of the water heater.
2. Turn off all electrical power to the unit.
3. Do not attempt to light the burner by hand.
4. Turn the gas control manual valve (external to the unit) clockwise to the off position.
5. Wait five minutes to clear out any gas. If the smell of gas remains, stop, and follow the instructions on page 3 of Owner's Guide.
6. Turn the gas control manual valve counterclockwise to the on position.
7. Turn on electric power to the unit.
8. The unit will now operate whenever hot water is called for. If the unit will not operate, follow the shutdown instructions and call a service technician.

Shutdown Instructions

1. Stop any water demand.
2. Turn off electric power.
3. Turn the gas control manual valve clockwise to the off position.

Should overheating occur, or the gas supply fail to shut off, turn off the manual control valve to the appliance.

15. Dimensions

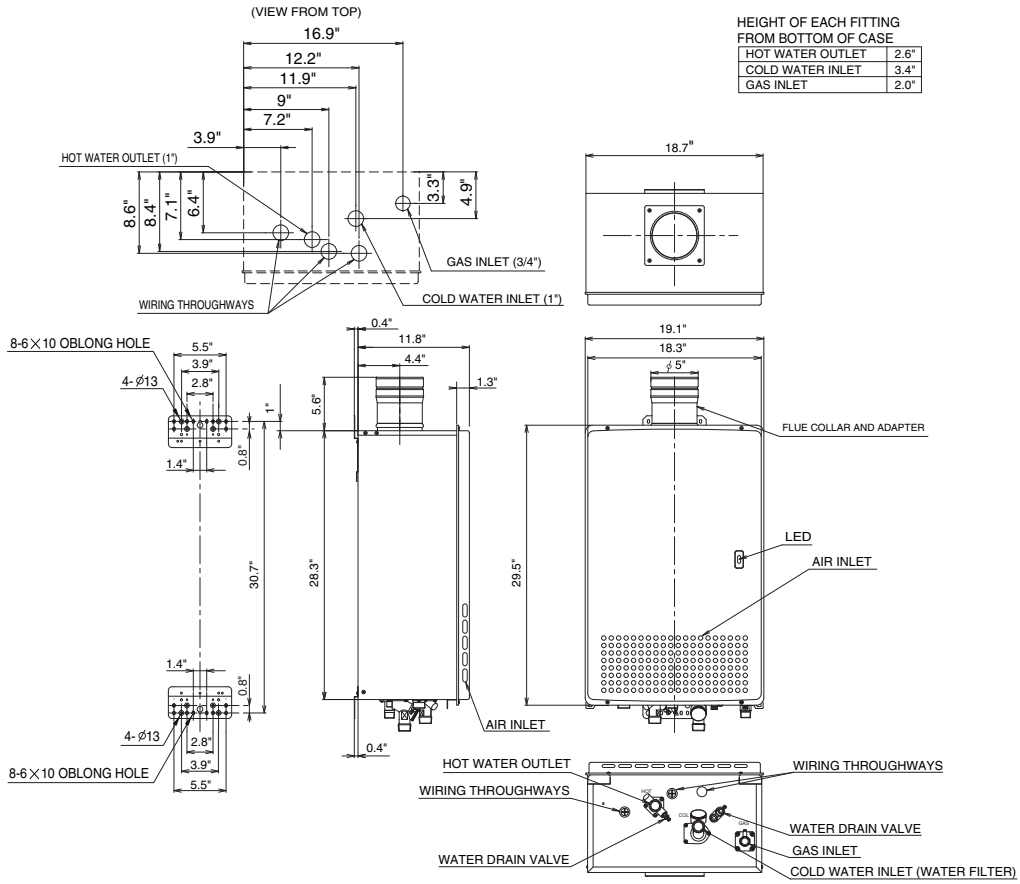

16. Multi-System

Install one system controller (SC-201-6M) for every six units.

A. Installation without a recirculation system

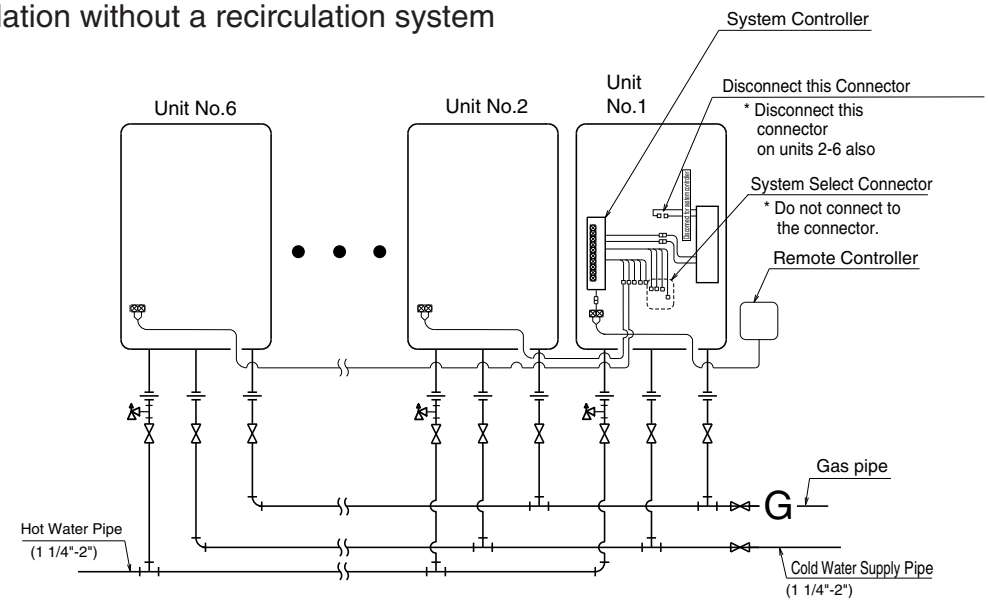

- Insulate or apply heating materials to both the cold water supply piping and the hot water piping to prevent freezing during cold weather and to prevent heat loss through the piping.

B-1. Example of Recirculation with a Multi-System

This system will make hot water more quickly available to remote fixtures.
The pump will circulate water through the loop until the entire loop is warm, and then the system controller will turn off the pump until the loop cools down.

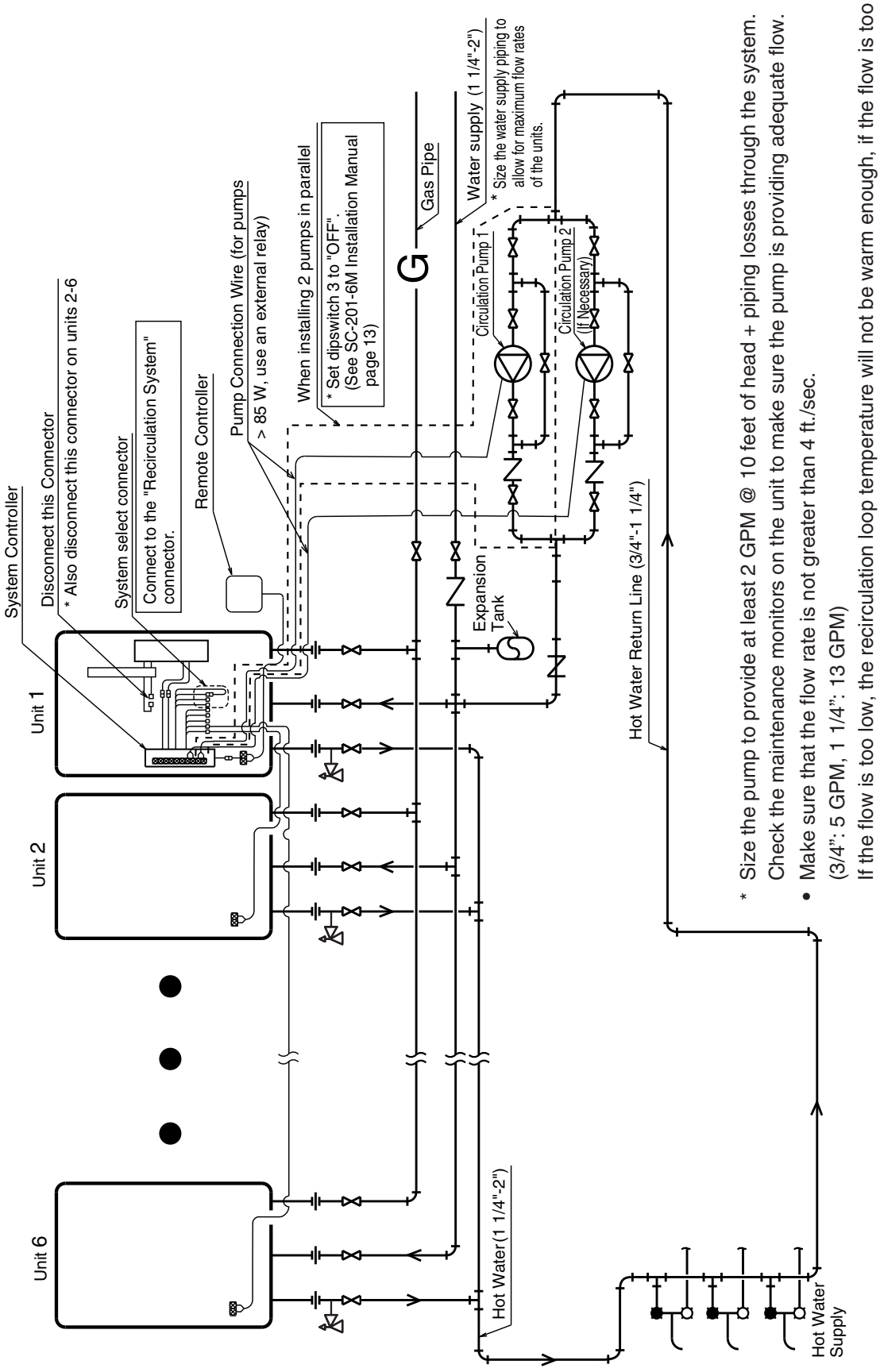

* Size the pump to provide at least 2 GPM @ 10 feet of head + piping losses through the system. Check the maintenance monitors on the unit to make sure the pump is providing adequate flow.
- Make sure that the flow rate is not greater than 4 ft./sec.
  (3/4": 5 GPM, 1 1/4": 13 GPM)
  If the flow is too low, the recirculation loop temperature will not be warm enough, if the flow is too high, the lifetime of the unit will be reduced.
* If there are multiple circulation loops, try to make the flow rate .75-1.25 GPM in each loop.
* Use copper or stainless water piping for the entire system.

B-2. Example of Installation with a Storage Tank and Recirculation System

The pump will push water through the Multi-System to heat up the tank.
When the return temperature is high, the flow within the device will be limited to 2.5 GPM*.

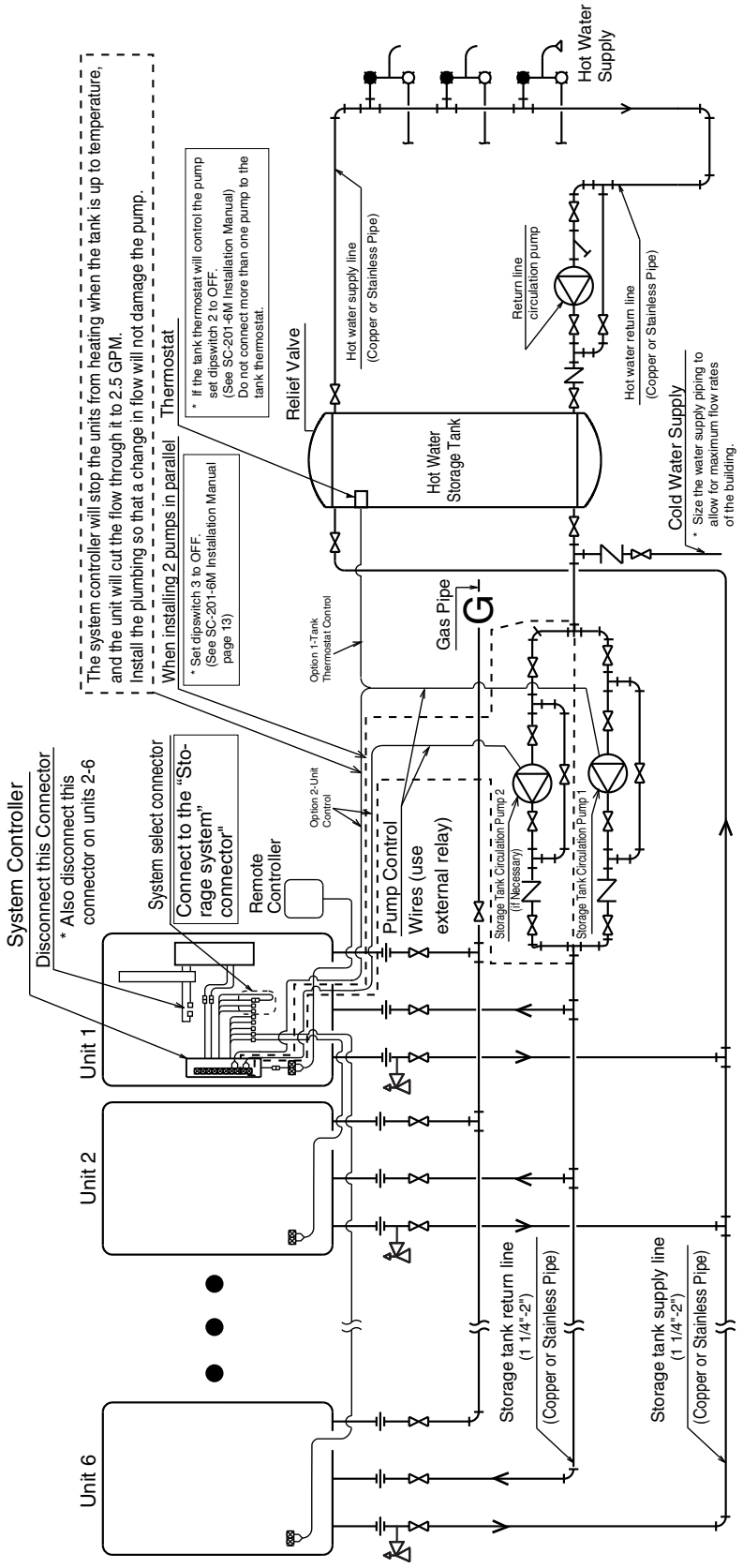

* For the set temperature of the remote control, use the temperature (of the thermostat) + about 10°F.

* To achieve the highest recovery, size the storage tank circulation pump for maximum capacity.
(12 GPM (each) @ 50 ft. of head (160°F setting or less) + piping losses through the system). Verify the supply pressure to the units is at least 30 PSI.

Multi-System Wiring (Use SC-201-6M)

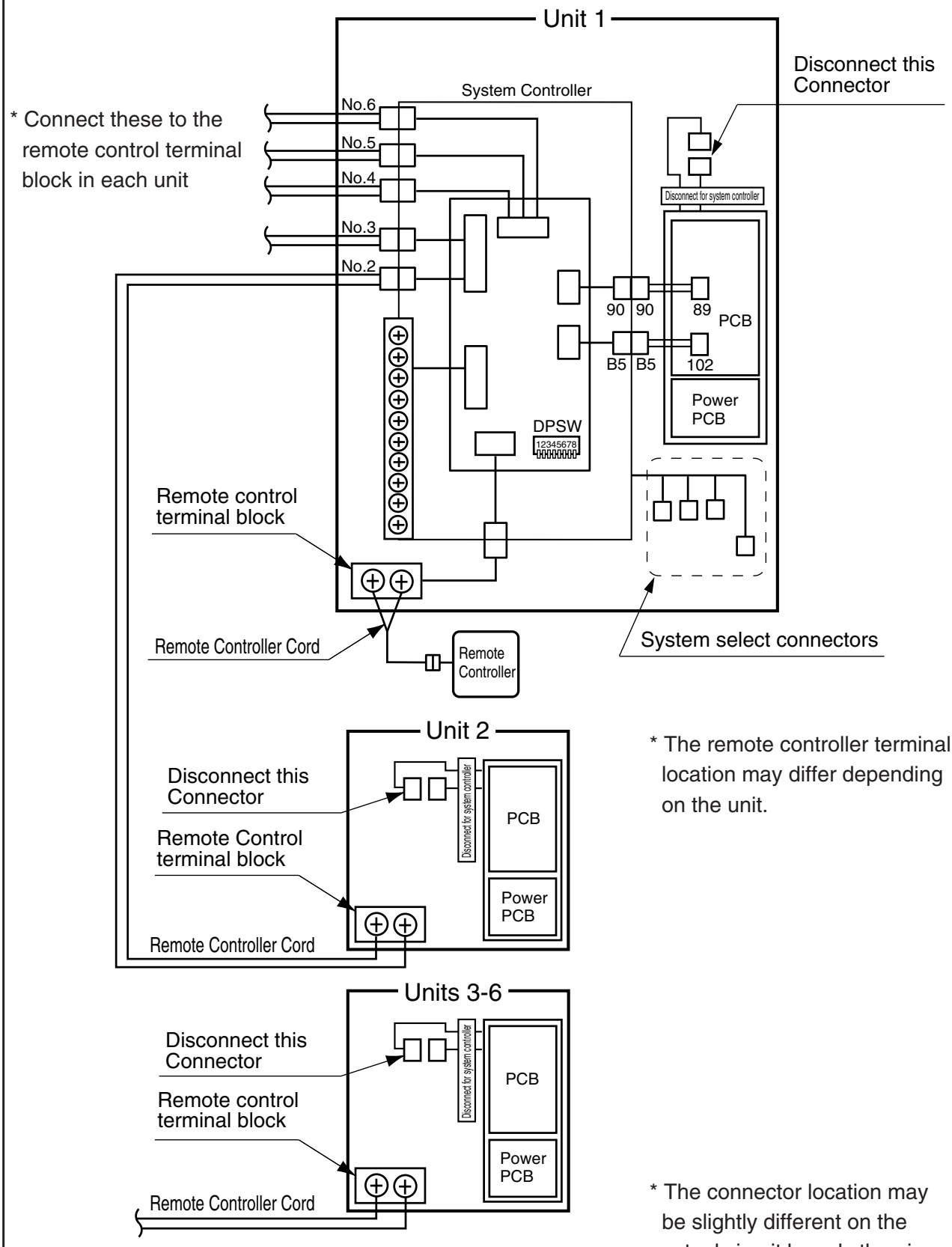

* The remote controller terminal location may differ depending on the unit.

* The connector location may be slightly different on the actual circuit boards than in these illustrations.

Remote Controller RC-7649M

Installation Guide

For Installers:
Read this installation guide carefully before carrying out installation.

NORITZ AMERICA CORPORATION

Note

Do not connect power to the water heater before the remote controller has been properly installed.
Recommended installation location of the remote controller is in a bathroom.

Included Parts List

Part Name	Quantity
Remote Controller	1
Wall Packing	1
Phillips Roundhead Wood Screw	2
Wall Anchor	2

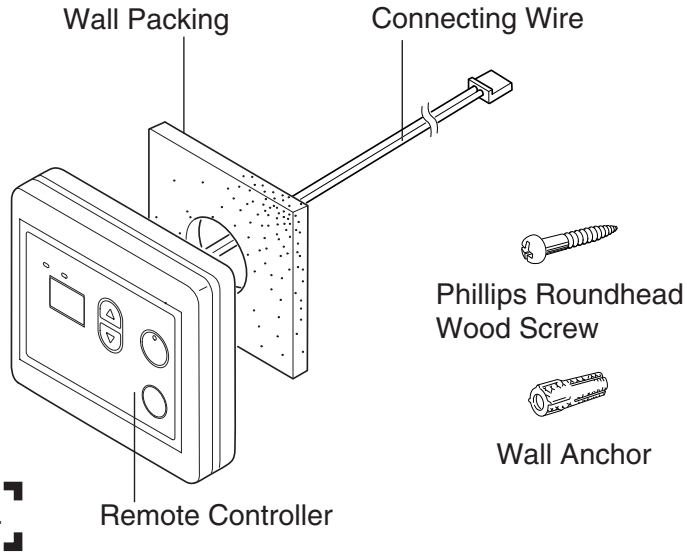

Do not disassemble the remote controller.

Notes on the Installation Location

- The remote should be installed in an easily accessible location.
- Avoid installing in a place where water or steam can come into contact with the controller.
- Avoid locations where special chemical agents (e.g., benzene, fatty and oily detergents) are used.
- Avoid outdoor installation, or installation in an indoor location where it will be exposed to direct sunlight.

Connection of Remote Controller Cord

White Connector	→	To Remote controller
Y-shaped terminals (two-core)	→	To Water heater

* Confirm the connection with the labels at both ends of the remote controller cord.

- A 26' cord can be purchased separately (Part # RC-CORD26).
- The remote controller cord can be extended up to 300 ft. by splicing the cord and using 18 gauge wire to extend the cord to the appropriate length.

Installation

1. Apply Wall Packing to the rear side of the remote controller.
2. Connect the remote controller wires to the separate remote controller cord.

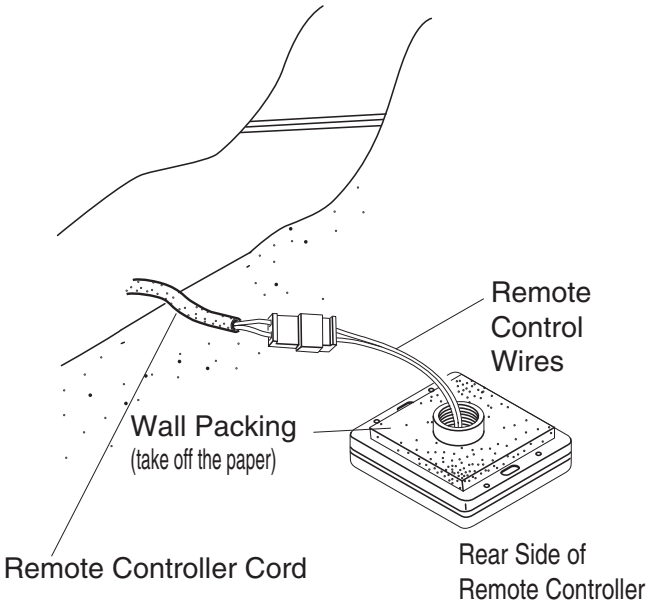

3. Remove the cover of the remote control, mark the location of the screw holes, and drill holes for the wall anchors.
4. Insert the wall anchors, screw the remote control to the wall and replace the cover.

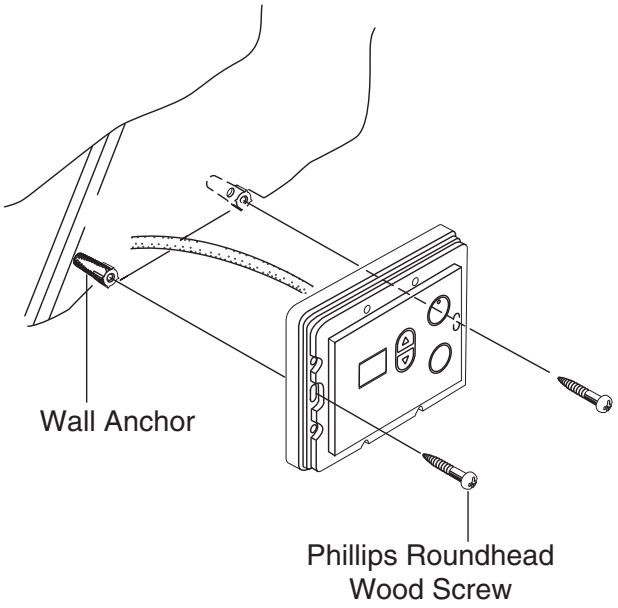

Installing the Remote Controller Outdoor Junction Box

1. Insert the remote controller wires through the wall pipe and secure the wall pipe to the remote controller. Locate the remote controller wall packing, slide it over the pipe and wires, and apply it to the rear side of the remote.

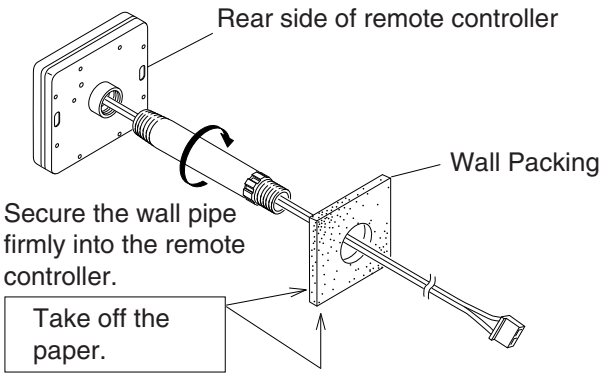

2. Drill a ⌀1-1/4" hole in the wall where the remote controller will be installed.

* Do not install the remote controller in a location that is exposed to moisture, direct sunlight, or chemical agents. These can damage the remote controller.

3. Insert the wall pipe containing the remote controller wires through the hole.

4. Slide the junction box packing and the junction box over the remote controller wires and wall pipe protruding from the outside wall.

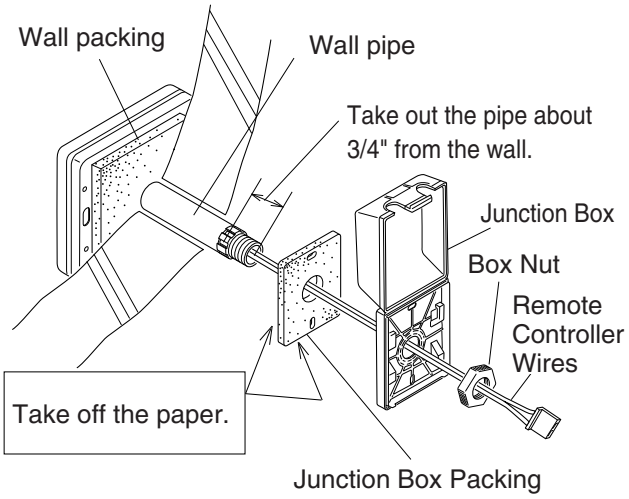

5. Slide the box nut over the remote controller wires and screw it onto the wall pipe.

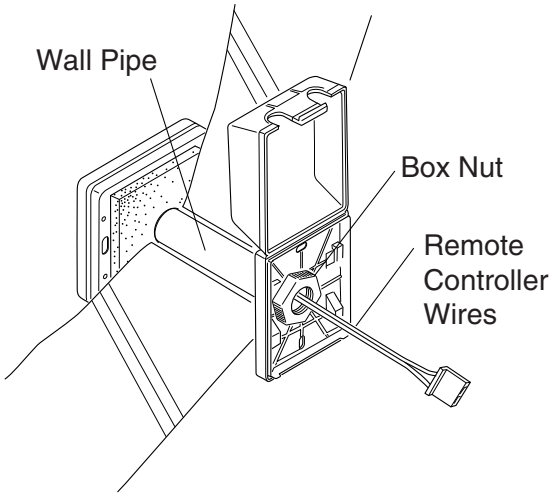

6. Connect the remote controller wires to the separate remote controller cord inside the box. Wind the excess remote controller wire on the provided hooks as illustrated below.

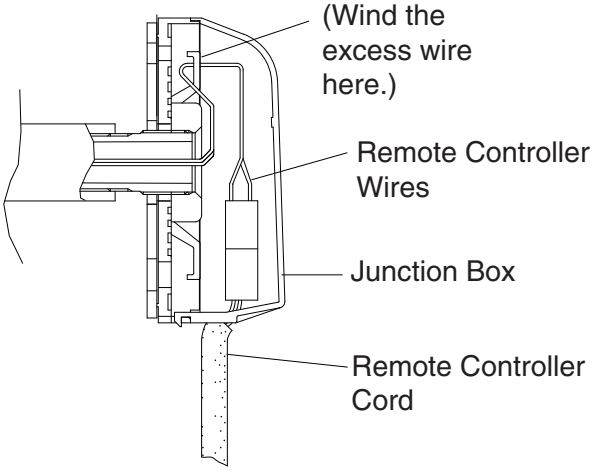

Tie the redundant length of the remote controller cord outside the junction box.

7. Close the junction box.