Flexible, anti-static, lightweight and tough, Elcometer's range of 2 ply blast hose is available with a working pressure of either 12 or 15bar (174 or 217psi) with a 3 times safety margin*.

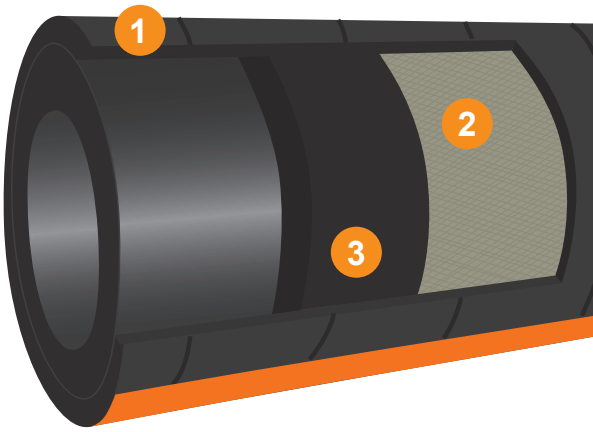

1 Tough Outer Cover

Manufactured using abrasion resistant and anti-static natural & styrene-butadiene rubber with a cloth impression, the tough weather resistant cover prolongs the life of the hose.

2 2 Ply Braid Reinforcement

Elcometer's blast hose features highly woven cord linings in a 2 ply cross pattern to improve hose strength and allow flexibility.

3 Anti-Static & Abrasion Resistant Inner Wall

Elcometer blast hose is abrasion resistant and manufactured out of natural & styrene-butadiene rubber compound with carbon black, in accordance with DIN53516 and has an anti-static rating (R) of less than 10^6sq m (10.76^7sq ft) to protect the user from static build up.

! elcoTip



The internal diameter of the blast hose should ideally be 3 to 4 times the size of the nozzle orifice.

What is a Whip Hose?

Operators may find that using a standard blast hose is too heavy to work with all day and difficult to move. To combat this, a short length of smaller internal diameter, more flexible blast hose can be fitted in between the nozzle and the standard blast hose – this is called a 'whip hose'. Consult the table below to choose the size of your whip hose in relation to the size of your main blast hose - in most circumstances this is one size down from your hose diameter.

Whip Hose Selection Guide for blasting at 100psi (6.89bar) nozzle pressure using garnet abrasive

Nozzle Size		Extension Hose ID	Whip Hose ID
4	¼" (6mm)	1" (25mm)	¾" (19mm)
5	5⁄16" (8mm)	1¼" (32mm)	1" (25mm)
6	⅜" (9.5mm)	1½" (38mm)	1¼" (32mm)
7	7⁄16" (11mm)	1½" (38mm)	1¼" (32mm)
8	½" (13mm)	2" (51mm)	1½" (38mm)

*Burst pressure safety margin = 3 x the working pressure

Elcometer Blast Hose Extensions

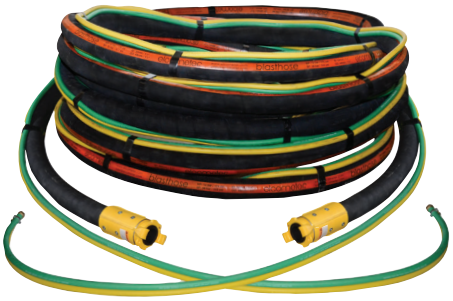

Elcometer Blast Hose Extensions are ideal when your blast hose is unable to reach the desired location.

Our blast hose extensions are supplied with twinline remote control hose and 2 quick couplings, with locking pins and gaskets.



½" (13mm) ID Blast Hose Extension - 12bar (174psi)

Technical Specification

Max. Working Pressure	Internal Diameter (ID)	Outside Diameter (OD)	Min. Bend Radius
12bar (174psi)	13mm (½")	28mm (1⅛")	105mm (4$^{9}/_{64}$")

Part Numbers

Part Number	Hose Length	Quick Coupling
BH13SB-10	10m (32.8ft)	Cast Iron
BH13SB-20	20m (65.6ft)	Cast Iron



¾" (19mm) ID Blast Hose Extension - 12bar (174psi)

Technical Specification

Max. Working Pressure	Internal Diameter (ID)	Outside Diameter (OD)	Min. Bend Radius
12bar (174psi)	19mm (¾")	34mm (1 ⅜")	155mm (6$^{7}/_{64}$")

Part Numbers

Part Number	Hose Length	Quick Coupling
BH19NB-10	10m (32.8ft)	Nylon
BH19NB-20	20m (65.6ft)	Nylon



1" (25mm) ID Blast Hose Extension - 12bar (174psi)

Technical Specification

Max. Working Pressure	Internal Diameter (ID)	Outside Diameter (OD)	Min. Bend Radius
12bar (174psi)	25mm (1")	38mm (1½")	200mm (7$^{7}/_{8}$")

Part Numbers

Part Number	Hose Length	Quick Coupling
BH25NB-10	10m (32.8ft)	Nylon
BH25NB-20	20m (65.6ft)	Nylon
BH25SB-10	10m (32.8ft)	Cast Iron
BH25SB-20	20m (65.6ft)	Cast Iron

1¼" (32mm) ID Blast Hose Extension - 12bar (174psi)



Technical Specification

Max. Working Pressure	Internal Diameter (ID)	Outside Diameter (OD)	Min. Bend Radius
12bar (174psi)	32mm (1¼")	48mm (1⅞")	260mm (10 15/64")

Part Numbers

Part Number	Hose Length	Quick Coupling
BH32NB-10	10m (32.8ft)	Nylon
BH32NB-20	20m (65.6ft)	Nylon
BH32SB-10	10m (32.8ft)	Cast Iron
BH32SB-20	20m (65.6ft)	Cast Iron

1¼" (32mm) ID High Pressure Blast Hose Extension - 15bar (217psi)



Technical Specification

Max. Working Pressure	Internal Diameter (ID)	Outside Diameter (OD)	Min. Bend Radius
15bar (217psi)	32mm (1¼")	48mm (1⅞")	256mm (10 5/64")

Part Numbers

Part Number	Hose Length	Quick Coupling
BH32XSB-10	10m (32.8ft)	Cast Iron
BH32XSB-20	20m (65.6ft)	Cast Iron

1½" (38mm) ID Blast Hose Extension - 12bar (174psi)



Technical Specification

Max. Working Pressure	Internal Diameter (ID)	Outside Diameter (OD)	Min. Bend Radius
12bar (174psi)	38mm (1½")	56mm (2 3/16")	305mm (12 1/64")

Part Numbers

Part Number	Hose Length	Quick Coupling
BH38NB-10	10m (32.8ft)	Nylon
BH38NB-20	20m (65.6ft)	Nylon
BH38SB-10	10m (32.8ft)	Cast Iron
BH38SB-20	20m (65.6ft)	Cast Iron

1½" (38mm) ID High Pressure Blast Hose Extension - 15bar (217psi)



Technical Specification

Max. Working Pressure	Internal Diameter (ID)	Outside Diameter (OD)	Min. Bend Radius
15bar (217psi)	38mm (1½")	56mm (2 3/16")	304mm (11 31/32")

Part Numbers

Part Number	Hose Length	Quick Coupling
BH38XSB-10	10m (32.8ft)	Cast Iron
BH38XSB-20	20m (65.6ft)	Cast Iron