# HandiVac

## Instruction Manual

**This guide covers the following models:**

HandiVac 7.2 (HH2012)

HandiVac 9.6 (HH5011WD)

HandiVac 14.4 (HH5010WD)*




**Please read this Manual before use**

* Model pictured

Congratulations on your purchase of your new Hoover vacuum cleaner.

There are many useful features built into your cleaner and we recommend that you carefully read this instruction book so that you may take best advantage of them.

Call us on 1300 360 845 if you have a query.

**BEFORE YOU BEGIN**

Your Hoover HandiVac arrives partially charged and therefore requires full charging in its base for 14 hours before use. This appliance can only be used in conjunction with the charging base supplied. The charging base is suitable for connection to any 240V powerpoint wall socket. This appliance should be charged indoors only.

This cleaner is intended for domestic household use only and is not designed for the collection of vitreous building material including particle board construction products and similar products such as wood/fibres, sand, cement, fillers, fibre glass etc. The pickup of these materials may be harmful to your cleaner and will void the manufacturer's warranty.

Safety reminders and taking care of your cleaner.

**PLEASE READ THESE INSTRUCTIONS THOROUGHLY.**
This will ensure you obtain full benefit from your new cleaner. Keep this Instruction Book in a handy place for future reference.

**IMPORTANT**

- Do not use outdoors.
- Do not expose to rain – store indoors.
- To avoid excessive heat and damage to the unit or batteries, do not operate the vacuum cleaner while in the charging unit.
- Do not allow to be used as a toy. Close attention is necessary when used by children.
- Use only as described in this manual. Use only manufacturer's recommended attachments.
- Do not use extension cords or outlets with inadequate current carrying capacity.
- Do not handle charger or vacuum cleaner with wet hands.
- Do not incinerate or mutilate batteries as they will explode at high temperature.
- Leaks from battery cells can occur under extreme usage or temperature conditions. If the liquid gets on the skin wash quickly with soap and water, or neutralise with a mild acid such as lemon juice or vinegar. If the liquid gets into the eyes, flush them immediately with clean water as quickly as possible.
- Do not pick up anything that is burning or smoking such as cigarettes, matches or hot materials.
- Do not use without a filter/s in place.
- Do not use to pick up flammable or combustible liquids such as gasoline, or use in areas where they may present.
- Do not pick up large or small pieces of sharp-edge debris such as glass.
- Locate the charging base indoors in a cool, dry area not exposed to the severe weather to avoid electrical shock and/or cleaner damage.
- Repair or replacing the battery should be only done by the manufacturer or its authorised service agent to avoid a hazard.
- Always disconnect cord from electrical powerpoint before cleaning.



- Use only the charger supplied by the manufacturer to recharge this appliance.
- Charge indoors only.
- This appliance is designed for domestic use only. Not for commercial application.
- Do not operate any appliance with a damage cord, plug or charger, or if the appliance is damaged in any way.
- Do not place the nozzle or vacuum near eyes or ears when operating.
- For best performance keep the vacuum and filters clean, and repair or replace a damaged filter.
- Never unplug the recharging base by pulling on the power cord.

**HandiVac 7.2**
220-240V AC 50Hz
7.2V 42W
Model No. HH2012
Part No. 14110085

**HandiVac 9.6**
220-240V AC 50Hz
9.6V 46W
Model No. HH5011WD
Part No. 14110083

**HandiVac 14.4**
220-240V AC 50Hz
14.4V 100W
Model No. HH5010WD
Part No. 14110084

HandiVac is a trademark of Hoover Floorcare Asia Pacific.
Hoover words and logo are registered trademarks.

Jan 2011

| PROBLEM | CAUSE | SOLUTION |
|---|---|---|
| Not charging - no power when switched on. | The power on the handheld vacuum must be switched 'OFF' on the handle, to enable the vacuum to charge effectively. | Ensure the charging base is plugged securely into the powerpoint and is switched 'ON'.<br>The charging light on the HandiVac will illuminate if correctly charging. |
| Running time too short.<br>Typically, running time is between 8-12mins depending on model. | Rechargeable batteries used, require a full charge to operate to their best performance. | Charge for a minimum or 14 hours prior to first use.<br>For additional or normal charging a minimum of 8 hours is required, but an optimum charge of 14 hours will ensure a full charge, and maximum operation time. |
| Weak suction. | Weak suction is often caused by the dust bin being full, or the filters becoming blocked. | Remove and separate filter parts and clean thoroughly. See page 9 for instructions.<br>Fully charge battery - see above. |

Due to our program of continuous product improvement and innovation, sometimes the product you buy may differ slightly from the one shown on this product carton.

# HandiVac

## 7.2V Dry Only

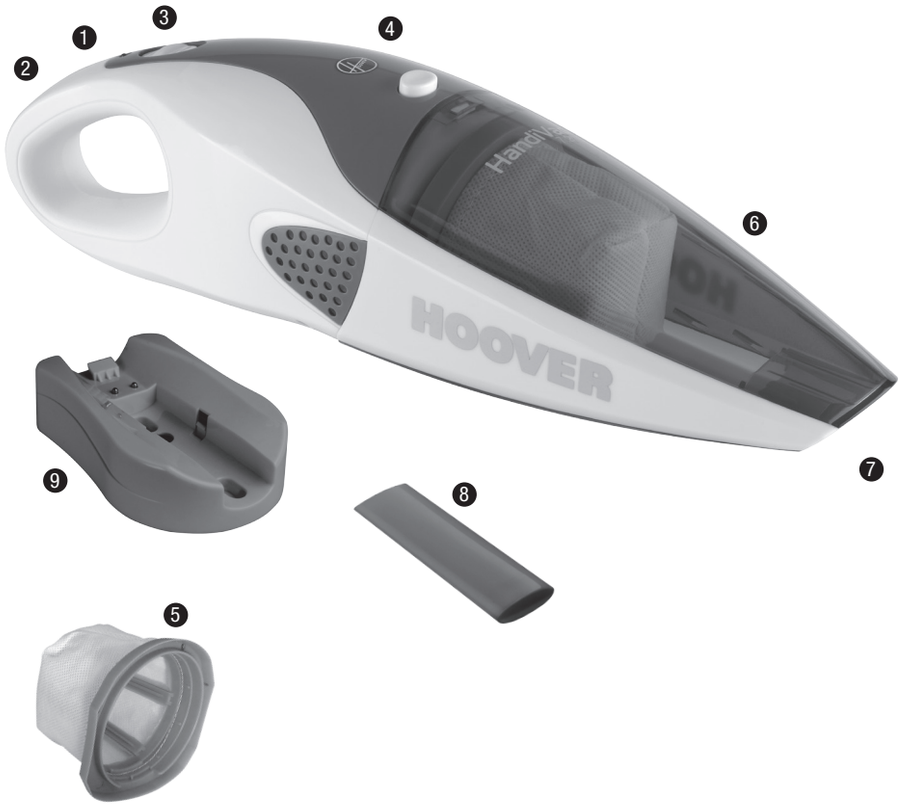


1. CHARGING INDICATOR
2. HANDLE
3. ON/OFF SWITCH
4. RELEASE BUTTON
5. INNER FILTER
6. DUST COMPARTMENT/BIN
7. INLET
8. CREVICE TOOL
9. CHARGING BASE

Model No: HH2012



# HandiVac

## 9.6V Wet & Dry




1. CHARGING INDICATOR
2. HANDLE
3. ON/OFF SWITCH
4. RELEASE BUTTON
5. INNER FILTER
6. OUTER FILTER
7. DUST COMPARTMENT/BIN
8. INLET
9. CREVICE TOOL
10. SQUEEGEE (WET USE)
11. CHARGING BASE

Model No: HH5011WD

# HandiVac

## 14.4V Wet & Dry




1. CHARGING INDICATOR
2. HANDLE
3. ON/OFF SWITCH
4. RELEASE BUTTON
5. INNER FILTER
6. OUTER FILTER
7. DUST COMPARTMENT/BIN
8. INLET
9. CREVICE TOOL

**FLOOR EXTENSION TOOLS**

10. EXTENSION TUBES
11. INLET TUBE
12. SOFT BRUSH
13. SQUEEGEE (WET USE)
14. VERTICAL CHARGING BASE WITH LED LIGHT

Model No: HH5010WD



## CHARGING

Your Hoover HandiVac handheld vacuum cleaner is a rechargeable battery operated appliance. Therefore to function at an optimum level we recommend to recharge the vacuum after each use.

**7.2V/ 9.6V Charging Base (HH2012, HH5011WD)**

- Your HandiVac will charge in a horizontal position.
- Charging light will indicate that the hand held vacuum is charging when illuminated.
- The charging base can be mounted in a vertical position on the wall if desired.

**14.4V Charging Base (HH5010WD)**

- Your HandiVac will charge in a vertical position.
- Charging light will indicate that the hand held vacuum is charging when illuminated.
- The charging base can be mounted in a vertical position on the wall if desired.

Ensure that the charging socket of vacuum cleaner fits correctly into the charging base.

Plug the adapter into a powerpoint. Charging is confirmed when the charging light is illuminated.

The normal charging time for this appliance is 14 hours. A minimum of 6-8 hours is required for effective operation.

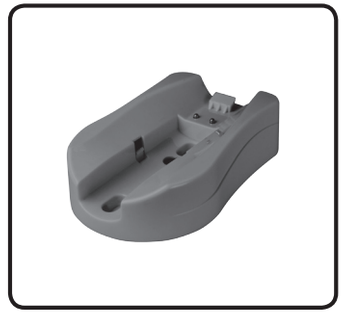

7.2V/9.6V CHARGING BASE



14.4V CHARGING BASE

## HOW TO USE YOUR HAND-HELD VACUUM

Your Hoover HandiVac handheld vacuum cleaner is a rechargeable battery operated appliance. Therefore to function properly you will required to charge the batteries fully for effective use. See 'Charging' section for more information.

To operate, push the ON/OFF switch forward to turn the hand-held vacuum on. The hand vacuum will then operate creating suction to pick up dust and dirt (and wet liquids if compatible) as required.

**NOTE:** If you find the suction power is weak, or becomes weak, then recharge the hand vacuum fully.

To turn OFF, pull the ON/OFF switch backwards and the hand vacuum will stop.

**IMPORTANT:** Ensure that you check the level of dust/ dirt within the dust bin after each use. This can be done easily as the dust bin is translucent. empty the dust bin before you reach maximum level, and periodically clean the filters to maintain optimum performance of your hand vacuum.

**Dry Use Only – HandiVac 7.2 (HH2012)**

This model is for use as a dry only vacuum, for cleaning dust, dirt and other household debris. This vacuum is NOT suitable or designed for vacuuming any wet liquids or damp debris. The operation of this dry only hand vacuum is similar to a 'wet & dry' vacuum.

One physical difference is the filter, which on the HandiVac 7.2 is a single large cloth filter as pictured on the features page.

Dust bin capacity (DRY):500mL

**Wet & Dry Use – HandiVac 9.6 (HH5011WD) & HandiVac 14.4 (HH5010WD)**

These models are for use vacuuming both liquids and dry household dust and dirt. The operation of this wet & dry hand-held vacuum is the similar to the 'dry only' vacuum.

One key physical difference is the unique two piece filter system on the HandiVac 9.6 & 14.4 to optimise the performance of the vacuum when/if vacuuming liquids. The outer filter is a hard plastic, and the inner filter is a permanent washable filter.

Care must always be taken when vacuuming any liquids not to exceed the MAX capacity marked on the dust bin. The use of vacuuming liquids is only for small household spills. After each use vacuuming liquids the dust bin and filters must be cleaned and dried.

Dust bin capacity (DRY):500mL

Dust bin capacity (WET):150mL

**IMPORTANT:**

This appliance is not intended for use by persons (including children) with reduced physical, sensory or mental capabilities, or lack of experience and knowledge, unless they have been given supervision or instruction concerning use of the appliance by a person responsible for their safety. Children should be supervised to ensure that they do not play with the appliance.



## CARE AND CLEANING

We strongly recommend following our easy Care and Cleaning instructions. This will optimise the performance of your hand vacuum and prolong its operating life.

**Emptying your cleaner**

Always switch 'OFF' before opening your hand-held vacuum cleaner.

Press the release button down and detach the dust compartment. (Fig.1)

Remove the filters from the dust compartment (Dry only – Fig. 2, Wet & Dry – Fig. 3 & 4) and empty the container (Fig 5). A damp cloth can be used to clean inside the dust compartment.

gently tap out each of the filters to dislodge any dust and debris. A soft brush can be used to gently remove any dirt and dust from the filter/s. The 'dry only' filters differ from the 'wet & dry' filter system.

To clean the filter/s more thoroughly, you can rinse them with cold or tepid water.

**IMPORTANT NOTE:** The filter/s must be completely dry before replacing into the dust bin.

Ensure the filter parts are correctly fitted together, before putting back into the dust compartment. This will make the task easier.

Maximum dust collection will only be obtained with clean filter/s and an empty dust compartment.

**Cleaning Your Cleaner**

Periodically we recommend wiping out the inside of the dust compartment with a damp cloth. Filters should be cleaned regularly. For more thorough cleaning of filter/s they can be washed in cold or tepid water, with a very small amount of basic soap.

Filters must be rinsed thoroughly and allowed to dry completely at ambient temperature prior to replacing back into the vacuum.

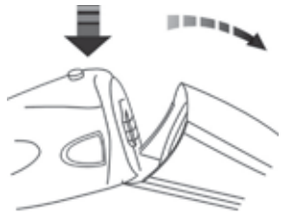

Fig. 1



Fig. 2 - 7.2V DRY ONLY VERSION



Fig. 3 - WET & DRY VERSIONS

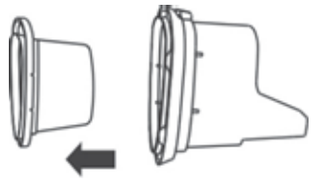

Fig. 4 - WET & DRY VERSIONS

## CARE AND CLEANING (cont)

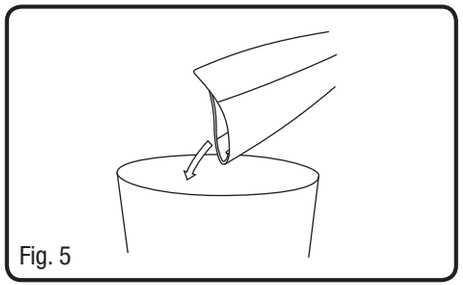

Fig. 5

## BATTERY CARE AND DISPOSAL

Your hand-held vacuum comes with a rechargeable battery pack inside. The battery pack must not be modified or changed. Any servicing required on the battery pack must only be undertaken by an authorised Hoover Floorcare service agent. Please visit www.hooverfloorcare.com.au for your closest agent.

At the end of life of this appliance, we suggest the battery pack is removed and disposed of in accordance with your local municipal guidelines.

This product contains recyclable materials. Do not dispose of this product as unsorted municipal waste. Please contact your local municipality for the nearest collection point.



## OTHER

**Wall Mounting**

Your Hoover HandiVac comes with a specially designed bracket used to hold the recharging base so that it may recharge while mounted on wall.

1. To mount the bracket, place it against the wall for the desired position, trace the mounting holes of the bracket using a sharp pencil, onto the wall or mounting surface. Make sure the wall bracket is vertically positioned.
2. Drill a diameter hole into each of the marked hole. Insert a plastic anchor into each hole.
3. Drive one screw into the upper anchor leaving the screw slightly exposed.
4. Place the bracket on the exposed portion of screw, slide the bracket downward to let the screw go into the slot.
5. Insert the second screw through the bracket into the lower anchor, tighten it to secure the bracket.

**NOTE:** Care must be taken when drilling into walls.

**NOTE:** There are two different wall mount charging bases depending on your model purchased.

## FLOOR EXTENSION TOOL - 14.4V (HH5010WD) ONLY

The Hoover HandiVac 14.4 comes with a Floor Extension tool. This allows your hand-held vacuum to reach difficult spaces such as down small spaces, ceiling cornices, along shelves or simply down to the floor.

The four parts assemble easily. Insert the Inlet Fitting (part iii) into the inlet of the hand-held vacuum. This will fit firmly in place. Then take the two extension tubes (part ii) and join together. Once together, one end will then fit into the Inlet Fitting (part iii). Finally push the Soft Brush (part i) into the open end of the Extension Tube (part ii). You are now ready to extend the use of your hand-held vacuum.

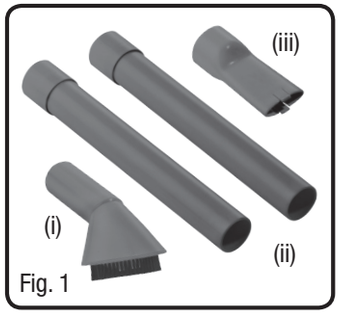


Fig. 1

These extra parts are able to conveniently store on the special Floor Extension Tool storage adaptor to your Charging Base – as shown in Figure 2.

Figure 3 shows Extension Tool assembly.

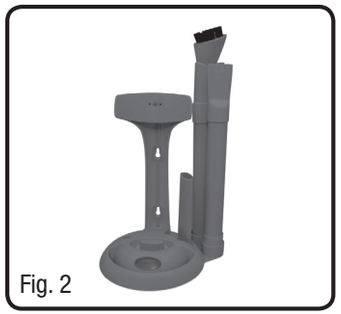

Fig. 2

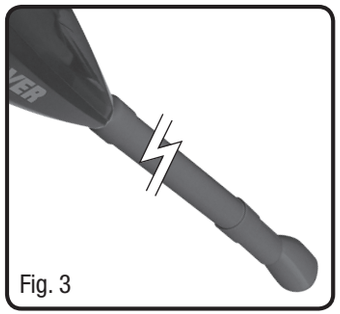

Fig. 3

# 1 Year WARRANTY

This is a parts and labour warranty against product defects and failures, when the product is used in accordance with the terms and conditions of this warranty statement.

This warranty on your cleaner commences from the original date of purchase and is not transferable; please retain your original proof of purchase for any warranty claims. This warranty is valid only in the country where the cleaner is purchased.

The cleaner must be operated in accordance with these instructions and used only for domestic household cleaning to remove DRY dirt and dust from household carpets, flooring and fabrics. This cleaner is not fit to be used as an industrial cleaner, and is not designed for the collection of vitreous building material including particle board, construction products and similar products such as wood/fibres, cement, fillers, fibre glass etc or excessive or frequent sand. The infrequent pick-up of these materials in these circumstances may be harmful to your cleaner and may void the manufacturer's warranty.

Accessories and consumables including dust bags and filters, unless defective in manufacture, are not subject to this warranty. In order to prolong the life of accessories and consumables, regular care and maintenance is recommended.

When properly used and cared for, your cleaner will render excellent service; refer to the instruction manual for further details, as misuse or failure to follow the instructions makes this warranty void.

In the event of service or advice being needed, please contact Hoover Floorcare Asia Pacific Pty Ltd, Level 1, Building 2, Brandon Park Business Park, 530 Springvale Road, Glen Waverley Victoria 3150 or call 1300 360 845 Monday - Friday 9am - 5pm (EST).
Email: sales@hooverfloorcare.com.au.

The decision to repair or replace the cleaner is at the sole discretion of Hoover Floorcare.

Hoover Floorcare is unable to accept responsibility under this warranty for any repair work not carried out by an authorised Hoover Service Agent or from the use of non-genuine parts. If any part is no longer available or manufactured, Hoover Floorcare will replace it with a genuine functional replacement part.

This warranty does not apply to the cost of replacing any parts of the product due to normal wear and tear, alterations, improper installation, physical abuse, misuse or accidental damage. Any transportation costs involved in the repair of defective parts shall be borne by the claimant.

If proof of purchase cannot be provided at the time of a warranty claim or service, any work carried out on the cleaner is chargeable. The repair or replacement of the cleaner under this warranty does not extend the original period of warranty.

The benefits conferred by this warranty are in addition to all other rights and remedies in respect of the product as outlined under the Trade Practises Act and other State and Territory laws.

"Our goods come with guarantees that cannot be excluded in the Australian Consumer Law. You are entitled to a replacement or refund for a major failure and for compensation for any other reasonably foreseeable loss or damage. You are also entitled to have the goods repaired or replaced if the goods fail to be of acceptable quality and the failure does not amount to a major failure."

**Keep this Guarantee and your receipt as proof of purchase**

Purchase Date ...../...../.....

Our policy is one of continuous development and accordingly we reserve the right to change specifications without prior knowledge.

Hoover Floorcare Asia Pacific Pty Ltd
(ACN 086 345 575)
Level 1, Building 2, Brandon Park Business Park,
530 Springvale Road, Glen Waverley Victoria 3150