RS 062 020 - S1 - N1 - W0 - F1 - M02 - C155 - E00 - B00 - Lxxx.xxx

Rolled Screw

Screw Diameter

062 - 0.625 inch

Screw Lead

020 - 0.200 inch
100 - 1.000 inch

Support Configurations (see pages 33-34)

S1 - Simple - Simple
S2 - Fixed (LT) - Simple
S3 - Fixed (HT) - Simple
S4 - Rigid - Simple
S5 - Rigid - Rigid
S9 - other

Nut Type (see pages 34-36)

N1 - NPL ball nut (RFT)
N2 - NPL ball nut (LFT)
N3 - PL ball nut (RFT)
N4 - PL ball nut (LFT)
N5 - NPL Turcite nut (RFT)
N6 - NPL Turcite nut (LFT)
N7 - PL Turcite nut (RFT)
N8 - PL Turcite nut (LFT)
N9 - other

Nut Wipers (see page 96)

W0 - none
W1 - Wipers on Ball Nut

Nut Flange Type (see page 36)

F0 - none
F1 - Round flange
F2 - Vertical bracket (E)
F3 - Vertical bracket (M)
F4 - L bracket (E)
F5 - L bracket (M)
F9 - other

Motor Mount (see pages 37, 96-97)

M00 - none
M01 - Hand crank
M02 - NEMA 23 mount (E)
M03 - NEMA 23 mount (M)
M04 - NEMA 34 mount (E)
M05 - NEMA 34 mount (M)
M06 - NEMA 23 (RH) wrap
M07 - NEMA 23 (LH) wrap
M08 - NEMA 34 (RH) wrap
M09 - NEMA 34 (LH) wrap
M99 - other

Coupling Type (see pages 94-95)

C000 - none
C999 - other
C025 *to* **C029** - C100
C048 *to* **C055** - C125
C130 *to* **C134** - H100
C155 *to* **C164** - H131
C407 *to* **C413** - G100
C435 *to* **C444** - G126

Rotary Encoder (see page 98)

E00 - none
E99 - other
E20 - 500 lines/rev
E21 - 1000 lines/rev
E22 - 1270 lines/rev

Power-off Brake (see page 99)

B00 - none
B99 - other
B20 - 24 VDC
B21 - 90 VDC

Thread Length (see page 34)

Lxxx.xxx - screw thread length (inches)

Note: See page 14 for a complete description of the above part number system.

(E) - English Interface
(LFT) - Left Facing Thread
(LH) - Left Hand
(LT) - Low Thrust
(HT) - High Thrust
(M) - Metric Interface
(NPL) - Non Preloaded
(PL) - Preloaded
(RFT) - Right Facing Thread
(RH) - Right Hand

Specifications subject to change without notice

Screw & Nut Specifications

Model Number	Nut Type	Diameter inches (mm)	Lead inches (mm)	Root Diameter inches (mm)	Ball Diameter inches (mm)	Number of Circuits	Static Load lbs (kgf)	Dynamic Load[1] lbs (kgf)
RS062020 0.625 inch dia. 0.200 inch lead	***Non-preloaded*** **Ball (N1/N2)**	0.625 (15,87)	0.200 (5,08)	0.503 (12,77)	0.125 (3,17)	1	6,150 (2790)	800 (363)
	Preloaded **Ball (N3/N4)**						6,070 (2753)	720 (326)
	Non-preloaded **Turcite (N5/N6)**				n/a	n/a	800 (362)	100 (45)
	Preloaded **Turcite (N7/N8)**						800 (362)	90 (41)
RS062100 0.625 inch dia. 1.000 inch lead	***Non-preloaded*** **Ball (N1/N2)**	0.625 (15,87)	1.000 (25,40)	0.505 (12,82)	0.125 (3,17)	2	2,425 (1100)	590 (267)
	Preloaded **Ball (N3/N4)**						2,390 (1084)	530 (240)
	Non-preloaded **Turcite (N5/N6)**				n/a	n/a	800 (362)	100 (45)
	Preloaded **Turcite (N7/N8)**						800 (362)	90 (41)

Other Specifications

Maximum Acceleration Rate	Ball nut: 772 inches/sec^2 (19.6 m/sec^2) Turcite nut: 193 inches/sec^2 (4.9 m/sec^2)
Maximum Speed	Ball nut: 3000 rpm Turcite nut: 1500 rpm
Screw Material **Screw Extensions**	Right Hand Thread, Case Hardened Rc 58 Steel Rolled Ball Screw 303 Woodruff Keyways on Extensions from Support Housings
Screw Maximum Length [2] **Screw Weight**	72 inches (1828 mm) 0.92 lbs/ft (13,7 g/cm)
Support Housings **Support Housing Features**	Steel with Black Oxide Finish, 45° Chamfer x .02 inch (0,50) all Straight Edges Base or Face Mount with Integral Seals
Nut Flanges **Nut Flange Features**	Steel with Black Oxide Finish English or Metric Load Mounting Interface

Footnotes:

(1) Load based upon 1 million inches (25 Km) of travel life. See page 35 for further travel life ratings.

(2) Maximum stock length (not the maximum thread length with bearing housings). See page 34 for maximum thread lengths for each configuration.

Specifications subject to change without notice

Screw Specifications

Model Number	Nut Type	Screw Efficiency %	Lead Error inch/ft (mm/300 mm)	Backlash inches (mm)	Unidirectional Repeatability inches (mm)	Bidirectional Repeatability inches (mm)
RS062020 0.625 inch dia. 0.200 inch lead	***Non-preloaded*** **Ball (N1/N2)**	90	< 0.003 (0,075)	< 0.008 (0,203)	+/- 0.0002 (0,0050)	+ 0.0002 (0,0050) *to* - 0.0082 (0,2082)
	Preloaded **Ball (N3/N4)**			0		+ 0.0002 (0,0050) *to* - 0.0002 (0,0050)
	Non-preloaded **Turcite (N5/N6)**	60	< 0.003 (0,075)	< 0.008 (0,203)	+/- 0.0002 (0,0050)	+ 0.0002 (0,0050) *to* - 0.0082 (0,2082)
	Preloaded **Turcite (N7/N8)**			0		+ 0.0002 (0,0050) *to* - 0.0002 (0,0050)
RS062100 0.625 inch dia. 1.000 inch lead	***Non-preloaded*** **Ball (N1/N2)**	90	< 0.004 (0,099)	< 0.008 (0,203)	+/- 0.0002 (0,0050)	+ 0.0002 (0,0050) *to* - 0.0082 (0,2082)
	Preloaded **Ball (N3/N4)**			0		+ 0.0002 (0,0050) *to* - 0.0002 (0,0050)
	Non-preloaded **Turcite (N5/N6)**	60	< 0.004 (0,099)	< 0.008 (0,203)	+/- 0.0002 (0,0050)	+ 0.0002 (0,0050) *to* - 0.0082 (0,2082)
	Preloaded **Turcite (N7/N8)**			0		+ 0.0002 (0,0050) *to* - 0.0002 (0,0050)

Assembly Specifications

Model Number	Nut Type	Breakaway Torque oz-in (N-m)				
		Simple-Simple	**Fixed(LT)-Simple**	**Fixed(HT)-Simple**	**Rigid-Simple**	**Rigid-Rigid**
RS062020 0.625 inch dia. 0.200 inch lead	***Non-preloaded*** **Ball (N1/N2)**	< 8 (0,06)	< 10 (0,07)	< 20 (0,14)	< 20 (0,14)	< 30 (0,21)
	Preloaded **Ball (N3/N4)**	< 15 (0,11)	< 20 (0,14)	< 30 (0,21)	< 30 (0,21)	< 40 (0,28)
	Non-preloaded **Turcite (N5/N6)**	< 10 (0,07)	< 15 (0,11)	< 30 (0,21)	< 30 (0,21)	< 40 (0,28)
	Preloaded **Turcite (N7/N8)**	< 25 (0,18)	< 30 (0,21)	< 45 (0,32)	< 45 (0,32)	< 55 (0,39)
RS062100 0.625 inch dia. 1.000 inch lead	***Non-preloaded*** **Ball (N1/N2)**	< 15 (0,11)	< 25 (0,18)	< 40 (0,28)	< 40 (0,28)	< 50 (0,35)
	Preloaded **Ball (N3/N4)**	< 30 (0,21)	< 40 (0,28)	< 55 (0,39)	< 55 (0,39)	< 65 (0,45)
	Non-preloaded **Turcite (N5/N6)**	< 25 (0,18)	< 35 (0,25)	< 50 (0,35)	< 50 (0,35)	< 60 (0,42)
	Preloaded **Turcite (N7/N8)**	< 50 (0,35)	< 60 (0,42)	< 75 (0,53)	< 75 (0,53)	< 85 (0,60)

Specifications subject to change without notice

Support Housing Specifications

Support Housing Life millions of screw revolutions	Support Housing Thrust Load Capacity - (Axial) lbs (kgf)			
	Simple	Fixed (LT)	Fixed (HT)	Rigid
Static	1,370 (621)	1,725 (782)	3,105 (1408)	3,105 (1408)
1	1,370 (621)	1,725 (782)	2,875 (1304)	2,875 (1304)
2	1,215 (551)	1,530 (694)	2,195 (996)	2,195 (996)
10	710 (322)	895 (406)	1,295 (587)	1,295 (587)
50	410 (186)	525 (238)	790 (358)	790 (358)
100	330 (150)	415 (188)	630 (286)	630 (286)
500	195 (88)	240 (109)	365 (166)	365 (166)

Thrust force applied in either direction

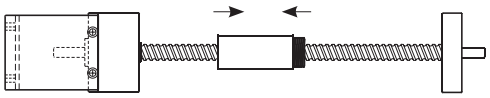

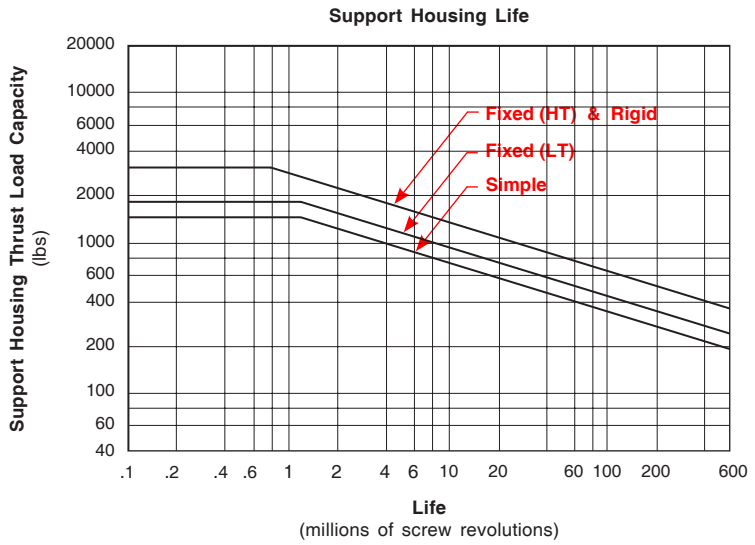

Note: Multiply screw revolutions by the screw lead in order to convert to inches (or mm) traveled by the nut.

Available Configurations

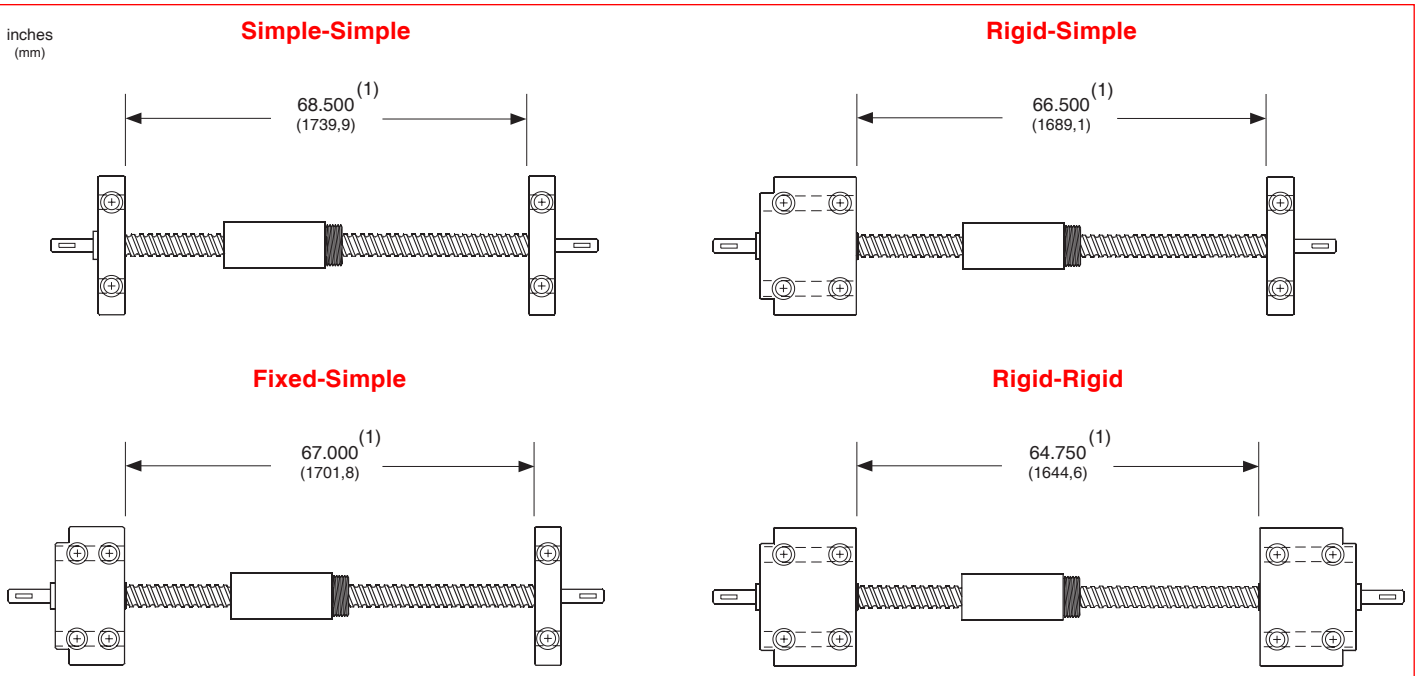

Overall Length Diagram

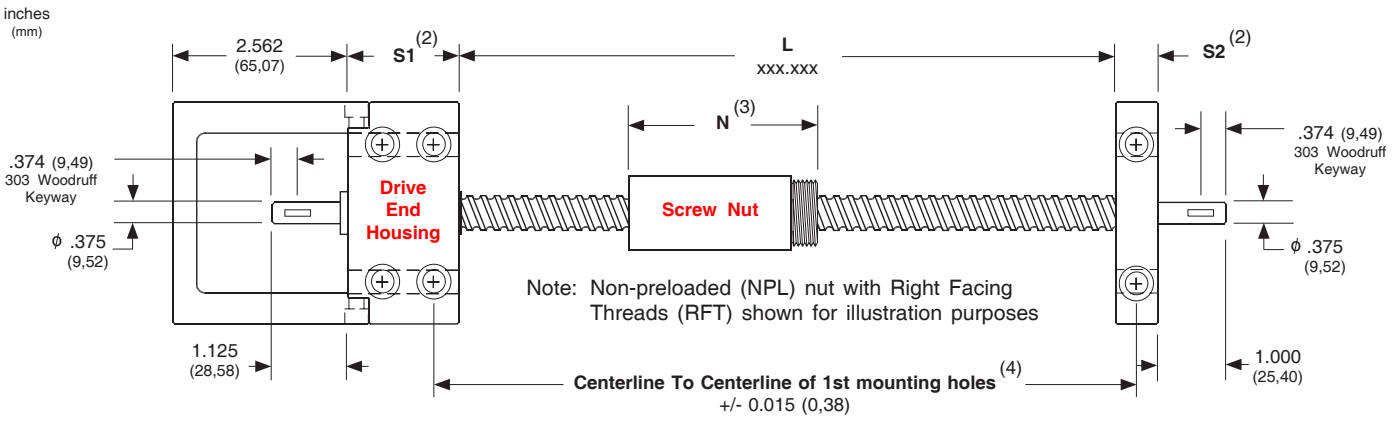

- Net usable travel *(nut hard-stop to hard-stop)* = **L - N**

- Overall length with NEMA 23 mount: (inches) = **2.562 + S1 + L + S2 + 1.000** (see above for maximum "L" value)
  (mm) = **65,07 + S1 + L + S2 + 25,40**

- Overall length without motor mount: (inches) = **1.125 + S1 + L + S2 + 1.000** (see above for maximum "L" value)
  (mm) = **28,58 + S1 + L + S2 + 25,40**

Footnotes:

(1) Maximum available standard screw thread length for the bearing support housing configuration shown.
(2) Fixed-simple support configuration shown for reference. See page 37 for length values for simple, fixed, and rigid housings.
(3) See page 36 for available nut styles. Refer to A1 & A2 values for the nut length. See page 96 for wiper kit lengths.
(4) Tolerance shown is for base mounted support housings. Tolerance also applies to face mounted support housings.

Specifications subject to change without notice

Performance Charts

Simple-Simple

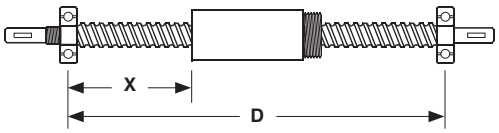

Rigid-Simple

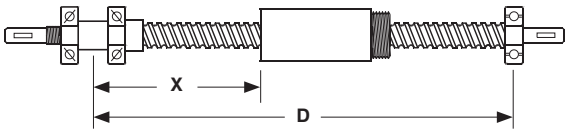

Rigid-Rigid

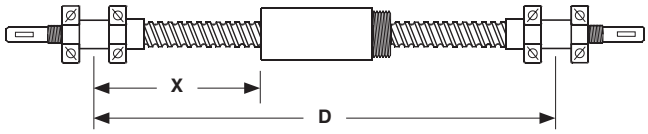

Maximum Compression Load (1)

X inches	(mm)	simple-simple lbs	(kgf)	rigid-simple lbs	(kgf)	rigid-rigid lbs	(kgf)
20	(508)	1799	(816)	2425	(1100)	2425	(1100)
40	(1016)	450	(204)	900	(408)	1800	(816)
60	(1524)	200	(91)	400	(181)	800	(363)

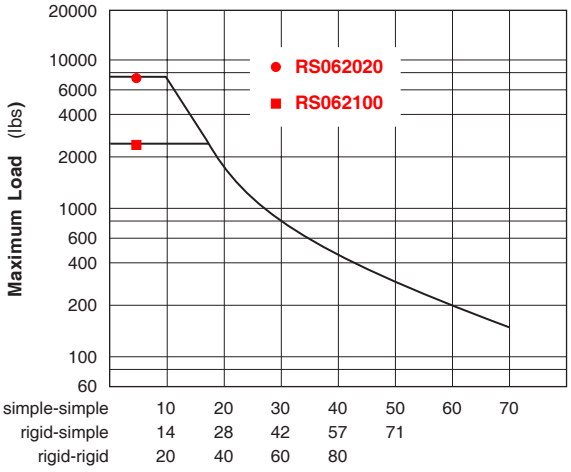

Maximum "X" distance between bearing support and Load
(inches)

Maximum Speed (1)

D inches	(mm)	simple-simple rpm	rigid-simple rpm	rigid-rigid rpm
27	(686)	2940	3000	3000
40	(1016)	1340	1970	2990
60	(1524)	595	870	1325
70	(1778)	435	640	970

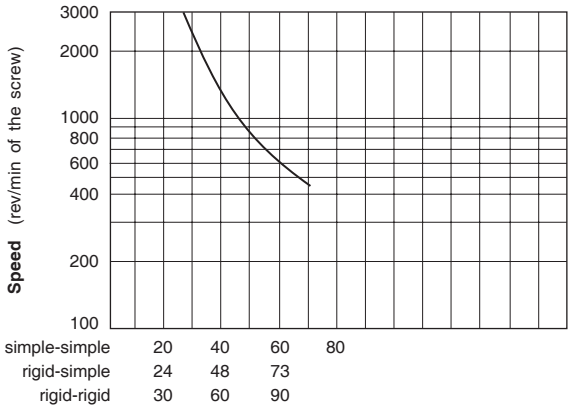

Maximum "D" distance between bearing supports
(inches)

Screw Travel Life (2)

Life millions of inches	(km)	062020 lbs	(kgf)	062100 lbs	(kgf)	Turcite Nut lbs	(kgf)
1	(25)	800	(363)	590	(268)	100	(45)
2	(50)	640	(290)	480	(218)	80	(36)
50	(1270)	230	(104)	170	(77)	29	(13)
100	(2540)	190	(186)	140	(64)	24	(11)

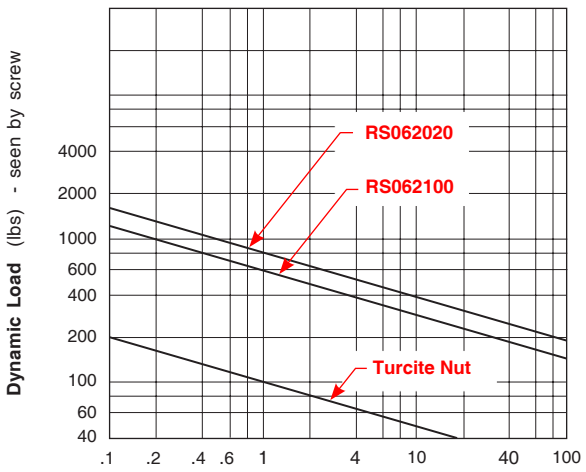

Travel Life
(millions of inches)

Footnotes:

(1) Refer to the simple-simple support lengths for fixed-simple configurations. A fixed housing performs like a simple housing for critical speed and compression load specifications. Maximum speeds may not be reached using a Turcite nut due to system friction.

(2) Multiply life value from chart (or graph) by 0.90 to obtain the life for a preloaded ball nut.

Specifications subject to change without notice

Nut Dimensions

Non-preloaded - Style A

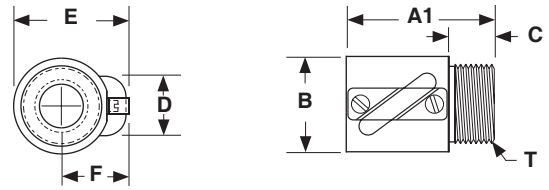

Non-preloaded - Style B

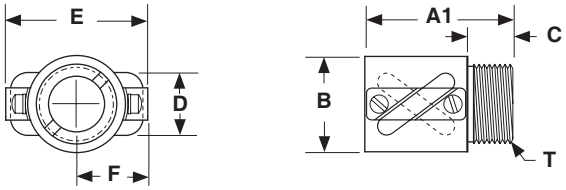

Non-preloaded - Style C (Turcite)

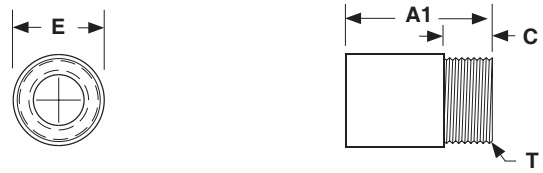

Preloaded - Styles A, B & C

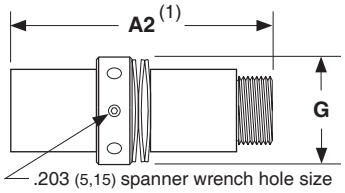

Nut Flange Dimensions

inches
(mm)

Round Flange

Weight = 0.55 lbs (0,25 kg)

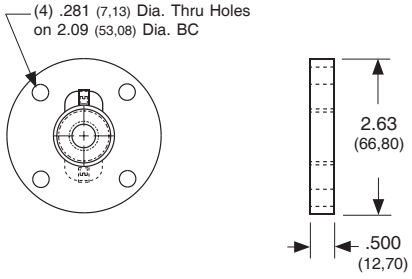

Vertical Bracket

Weight = 0.35 lbs (0,16 kg)

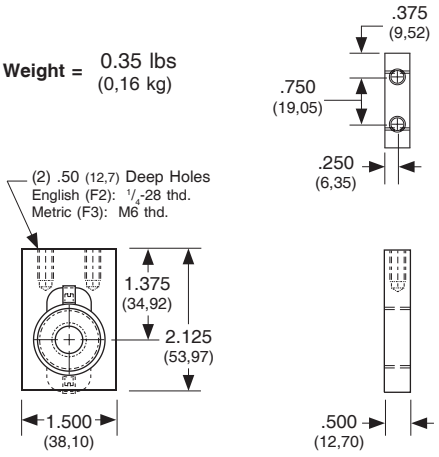

"L" Bracket

Weight = 0.62 lbs (0,28 kg)

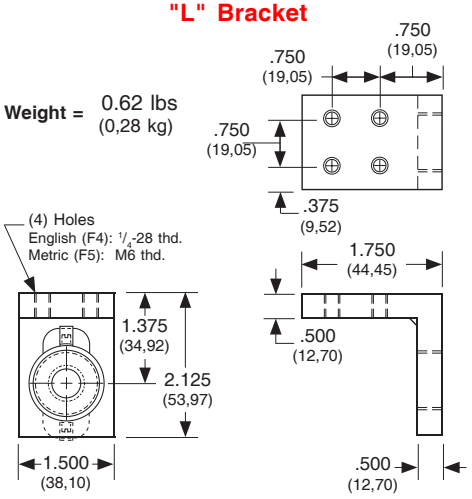

Model Number	Nut Style	Nut Dimensions inches (mm)									Nut (3) Weight lbs (kg)
		A1	A2 (1)	B	C	D	E	F	T - "V" Threads (2)	G	
RS062020	A	1.720 (43,69)	3.750 (95,25)	1.130 (28,70)	0.505 (12,83)	0.787 (19,99)	1.360 (34,54)	0.800 (20,32)	15/16 - 16 UN-2A (23,81 - 16 UN-2A)	1.420 (36,07)	0.50 (0,22)
RS062100	B	1.720 (43,69)	3.750 (95,25)	1.125 (28,57)	0.500 (12,70)	0.760 (19,30)	1.654 (42,01)	0.827 (21,00)	15/16 - 16 UN-2A (23,81 - 16 UN-2A)	1.420 (36,07)	0.28 (0,13)
RS062020	C	1.130 (28,70)	2.850 (72,39)	n/a	0.505 (12,83)	n/a	1.000 (25,40)	n/a	15/16 - 16 UN-2A (23,81 - 16 UN-2A)	n/a	0.20 (0,09)
RS062100	C	1.130 (28,70)	2.850 (72,39)	n/a	0.500 (12,70)	n/a	1.000 (25,40)	n/a	15/16 - 16 UN-2A (23,81 - 16 UN-2A)	n/a	0.20 (0.09)

Footnotes:

(1) This is the length for a preloaded nut. Preloaded nut consists of two (2) non-preloaded nuts with a locking spanner nut, and belville springs.

(2) All flange threads are internal (Type 2B) to match the external nut threads.

(3) Weight of the non-preloaded nut. Multiply value by 2.1 to obtain the weight for the preloaded nut assembly.

Specifications subject to change without notice

Support Housing Dimensions

Simple

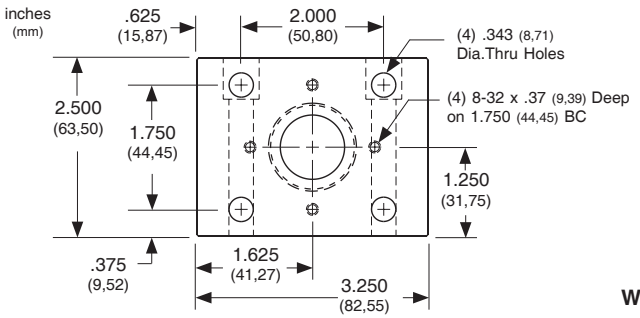

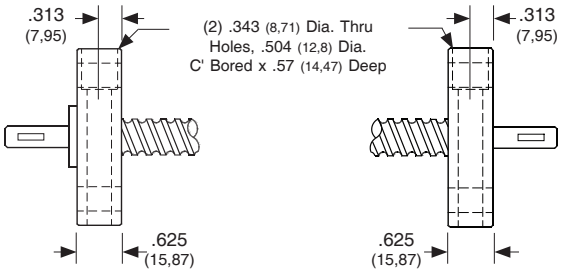

Weight = 1.1 lbs (0,50 kg)

Fixed

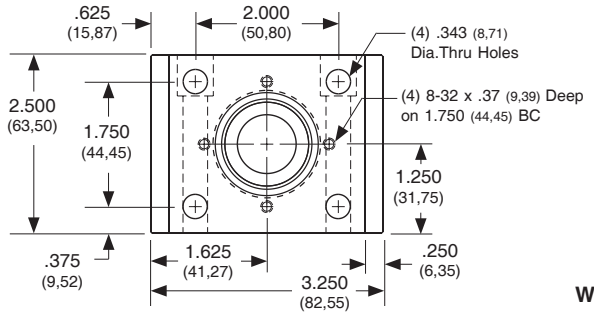

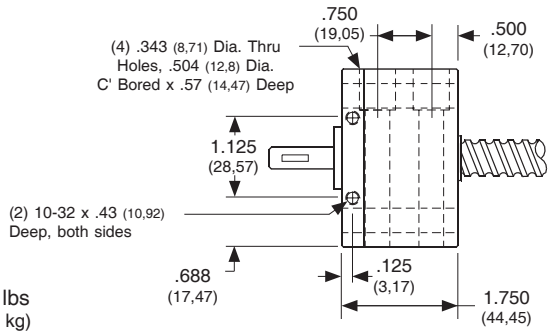

Weight = 2.7 lbs (1,22 kg)

Rigid

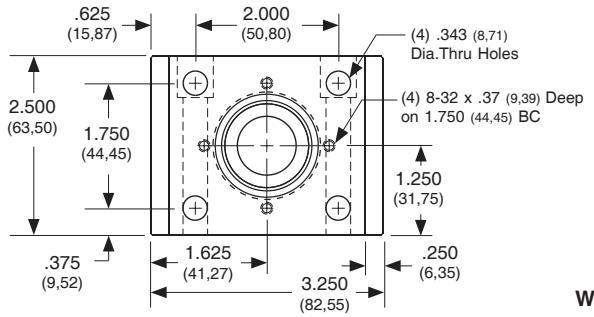

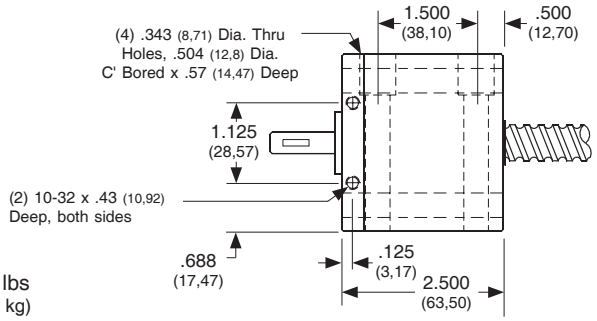

Weight = 3.9 lbs (1,77 kg)

NEMA 23 Motor Mount

Weight = 0.9 lbs (0,41 kg)

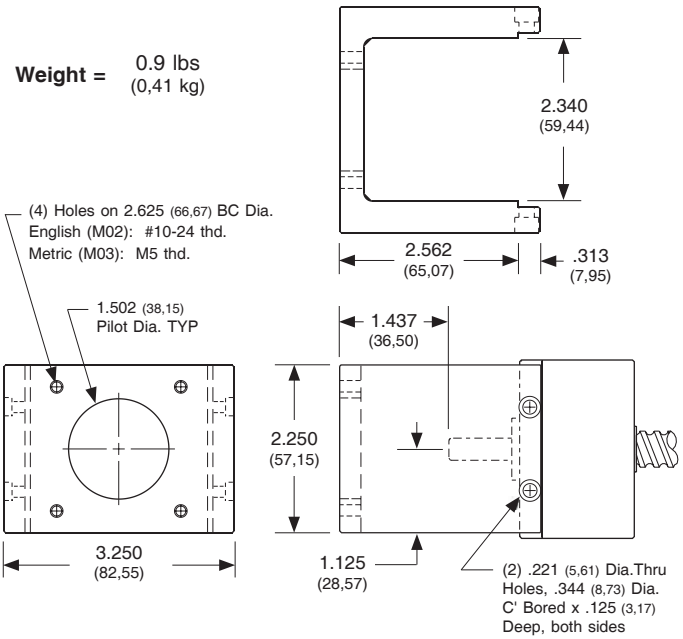

NEMA 34 Motor Mount

Weight = 1.4 lbs (0,64 kg)

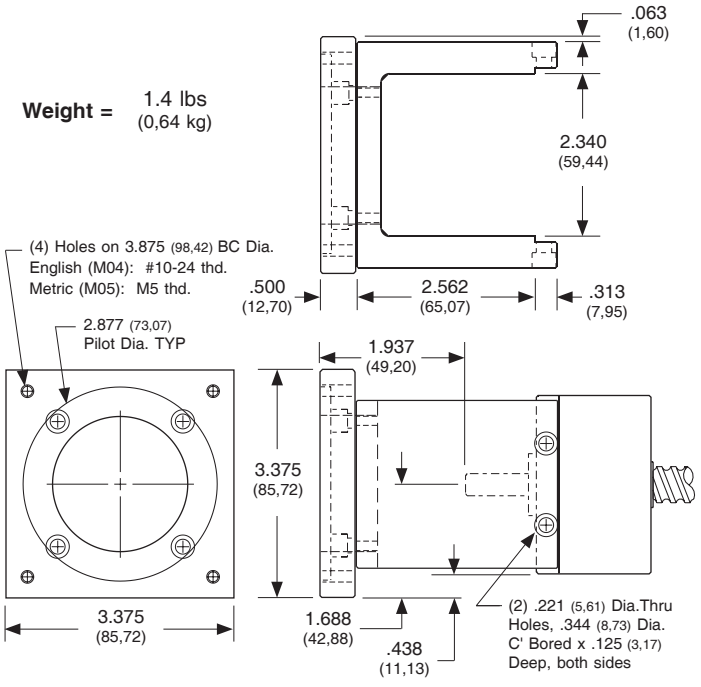

Specifications subject to change without notice