lenovo

ThinkCentre M83 and M93/p
Hardware Maintenance Manual



Machine Types: 10A0, 10A1, 10A2, 10A3, 10A4, 10A5, 10A6, 10A7, 10A8, 10A9, 10AA, 10AB, 10BE, 10AG,10AH, 10AJ, 10AK, 10AL,10AM, 10AN, 10DF, 10DG, 10DH, 10DJ, 10E8, 10E9, 10EA, and 10EB

Note: Before using this information and the product it supports, be sure to read and understand Chapter 1 “Safety information” on page 1 and Appendix A “Notices” on page 293.

Fifth Edition (September 2015)

© Copyright Lenovo 2013, 2015.

LIMITED AND RESTRICTED RIGHTS NOTICE: If data or software are delivered pursuant a General Services Administration “GSA” contract, use, reproduction, or disclosure is subject to restrictions set forth in Contract No. GS-35F-05925.

Contents

About this manual v

Chapter 1. Safety information 1

General safety 1
Electrical safety 1
Safety inspection guide 3
Handling electrostatic discharge-sensitive devices 3
Grounding requirements 4
Safety notices (multi-lingual translations) 4

Chapter 2. General information 27

Specifications 27
For machine types: 10A0, 10A1, 10A6, 10A7, 10AG, 10AK, 10AL, and 10BE 27
For machine types: 10A2, 10A3, 10A8, 10A9, 10AH, 10AJ, 10AM, and 10AN. 28
For machine types: 10A4, 10A5, 10AA, 10AB, 10DF, 10DG, 10DH, 10DJ, 10E8, 10E9, 10EA, and 10EB 29
Lenovo programs 29
Accessing a program on your computer . . . 29
An introduction to Lenovo programs 30
Lenovo Support Web site 32

Chapter 3. General checkout 33

Problem determination tips 33

Chapter 4. Troubleshooting and diagnostics 35

Basic troubleshooting 35
Accessing Control Panel on the Windows 8 or Windows 8.1 operating system 36
Troubleshooting procedure 36
Troubleshooting 37
Audio problems 38
CD problems 39
DVD problems 40
Intermittent problems 41
Hard disk drive problems 41
Keyboard, mouse, or pointing device problems 42
Monitor problems 43
Networking problems 45
Option problems 47
Performance and lockup problems 48
Printer problems 49
Serial port problems 50
Software problems 50
USB problems 51
Diagnostics 52
Lenovo Solution Center 52
UEFI diagnostic program 52

Chapter 5. Using the Setup Utility program 55

Starting the Setup Utility program 55
Viewing and changing settings 55
Using passwords 55
Password considerations 56
Power-on password 56
Administrator password 56
Setting, changing, and deleting a password . 56
Erasing lost or forgotten passwords (clearing CMOS) 56
Enabling or disabling a device 57
Selecting a startup device 57
Selecting a temporary startup device 57
Selecting or changing the startup device sequence 58
Enabling ErP LPS compliance mode 58
ICE performance mode 59
ICE thermal alert 59
Changing the BIOS settings before installing a new operating system 60
Exiting the Setup Utility program 60

Chapter 6. Symptom-to-FRU Index . . 61

Hard disk drive boot error 61
Power supply problems 61
Beep symptoms 61
POST error codes 62
Miscellaneous error conditions 63
Undetermined problems 64

Chapter 7. Locations 67

For machine types: 10A0, 10A1, 10A6, 10A7, 10AG, 10AK, 10AL, and 10BE. 67
Locating connectors, controls, and indicators on the front of your computer 67
Locating connectors on the rear of your computer 67
Locating major FRUs and CRUs 70
Looking up FRU information 72
Locating parts on the system board 72
Locating internal drives 76

© Copyright Lenovo 2013, 2015

For machine types: 10A2, 10A3, 10A8, 10A9, 10AH, 10AJ, 10AM, and 10AN 77
Locating connectors, controls, and indicators on the front of your computer 77
Locating connectors on the rear of your computer 77
Locating major FRUs and CRUs 80
Looking up FRU information 82
Locating parts on the system board 82
Locating internal drives 85
For machine types: 10A4, 10A5, 10AA, 10AB, 10DF, 10DG, 10DH, 10DJ, 10E8, 10E9, 10EA, and 10EB 86
Locating connectors, controls, and indicators on the front of your computer 86
Locating connectors on the rear of your computer 87
Locating major FRUs and CRUs 88
Looking up FRU information 90
Locating parts on the system board 90

Chapter 8. Replacing FRUs (machine types: 10A0, 10A1, 10A6, 10A7, 10AG, 10AK, 10AL, and 10BE) 93
Removing the computer cover 93
Removing and reinstalling the front bezel 94
Installing or replacing a PCI card 95
Installing or replacing a memory module 98
Replacing the optical drive 100
Installing or replacing the card reader. 102
Installing the card reader 103
Replacing the card reader 105
Installing or replacing the front USB assembly . . 106
Installing the front USB assembly 106
Replacing the front USB assembly 109
Replacing the battery 110
Replacing the power supply assembly 112
Replacing the heat sink and fan assembly 113
Replacing the microprocessor 115
Replacing the system board 117
Installing or replacing the mSATA solid-state drive. 120
Installing the mSATA solid-state drive 120
Replacing the mSATA solid-state drive . . . 122
Replacing the primary hard disk drive. 126
Replacing the secondary hard disk drive 128
Installing the solid-state drive 130
Replacing the front fan assembly 131
Replacing the rear fan assembly. 133
Replacing the front audio and USB assembly . . 135
Replacing the internal speaker 138
Replacing the thermal sensor 140
Replacing the cover presence switch 142
Replacing the Wi-Fi units 144
Removing the Wi-Fi adapter card 145
Removing the Wi-Fi card module 147
Installing the Wi-Fi units 149
Installing or removing the rear Wi-Fi antenna . . . 152
Installing the rear Wi-Fi antenna 152
Removing the rear Wi-Fi antenna. 153
Installing or removing the front Wi-Fi antenna . . 153
Installing the front Wi-Fi antenna 153
Removing the front Wi-Fi antenna 155
Replacing the keyboard or mouse 155
Completing the parts replacement 156
Obtaining device drivers 157

Chapter 9. Replacing FRUs (machine types: 10A2, 10A3, 10A8, 10A9, 10AH, 10AJ, 10AM, and 10AN) 159
Installing external options 159
Removing the computer cover 159
Removing and reinstalling the front bezel 160
Accessing the system board components and drives 161
Installing or replacing a PCI card 162
Installing or replacing a memory module 164
Replacing the optical drive 166
Installing or replacing the card reader assembly . . 169
Installing the card reader assembly 169
Replacing the card reader assembly 171
Installing or replacing the front USB assembly . . 174
Installing the front USB assembly 174
Replacing the front USB assembly 176
Replacing the battery 179
Installing or replacing the mSATA solid-state drive. 180
Installing the mSATA solid-state drive 180
Replacing the mSATA solid-state drive . . . 182
Replacing the power supply assembly 186
Replacing the power switch unit. 189
Replacing the heat sink and fan assembly 191
Replacing the microprocessor 194
Replacing the system board 196
Replacing the cover presence switch 200
Replacing the primary hard disk drive. 202
Installing or replacing the secondary hard disk drive. 204
Installing the secondary hard disk drive . . . 205
Replacing the secondary hard disk drive. . . 208
Installing the solid-state drive 211
Replacing the front fan assembly 213
Replacing the front audio and USB assembly . . 215

Replacing the internal speaker 217
Replacing the thermal sensor 219
Replacing the Wi-Fi units 221
Removing the Wi-Fi adapter card 222
Removing the Wi-Fi card module 223
Installing the Wi-Fi units 224
Installing or removing the rear Wi-Fi antenna . . . 227
Installing the rear Wi-Fi antenna 227
Removing the rear Wi-Fi antenna. 229
Installing or removing the front Wi-Fi antenna . . 230
Installing the front Wi-Fi antenna 230
Removing the rear Wi-Fi antenna. 232
Replacing the keyboard or mouse 233
Completing the parts replacement 234
Obtaining device drivers 236

Chapter 10. Replacing FRUs (machine types: 10A4, 10A5, 10AA, 10AB, 10DF, 10DG, 10DH, 10DJ, 10E8, 10E9, 10EA, and 10EB) 237

Removing the computer cover 237
Installing external options 238
Installing or removing the ac power adapter . . . 238
Installing or removing the vertical stand 240
Installing or removing the VESA mount bracket . . 242
Installing or removing the ac power adapter bracket 244
Replacing the optical drive 246
Installing or removing the hard disk drive assembly 251
Replacing the secondary hard disk drive 253
Installing or removing the I/O box 259
Installing or replacing a memory module 262
Replacing the battery 263
Replacing the power switch board 265
Replacing the Wi-Fi card module 266
Installing or removing the front Wi-Fi antenna . . 268
Installing or removing the rear Wi-Fi antenna . . . 270
Replacing the internal speaker 271
Replacing the cover presence switch 274
Replacing the system fan 276
Replacing the thermal module 278
Replacing the microprocessor 280
Replacing the system board 282
Replacing the keyboard or mouse 285
Completing the parts replacement 286
Obtaining device drivers 288

Chapter 11. Additional service information 289

Security features 289
Hardware controlled passwords 289
Operating system password 289
Vital product data. 289
BIOS levels 289
Flash update procedures 289
Updating the BIOS 290
Recovering from a POST/BIOS update failure 290
Power management 290
Advanced configuration and power interface (ACPI) BIOS 290
Automatic Power-on features 291

Appendix A. Notices 293

Television output notice 294
European conformance CE mark 294
Trademarks 294

Index. 295

© Copyright Lenovo 2013, 2015

About this manual

This manual provides service and reference information for ThinkCentre® computers listed on the front cover.

Use this manual along with the advanced diagnostic tests to troubleshoot problems.

Important: This manual is intended only for trained service technicians who are familiar with ThinkCentre computers. Use this manual along with the advanced diagnostic tests to troubleshoot problems effectively. Before servicing a ThinkCentre computer, be sure to read and understand Chapter 1 “Safety information” on page 1.

© Copyright Lenovo 2013, 2015

Chapter 1. Safety information

This chapter contains the safety information that you need to be familiar with before servicing a computer.

General safety

Follow these rules to ensure general safety:

- Observe good housekeeping in the area of the machines during and after maintenance.
- When lifting any heavy object:
  1. Ensure you can stand safely without slipping.
  2. Distribute the weight of the object equally between your feet.
  3. Use a slow lifting force. Never move suddenly or twist when you attempt to lift.
  4. Lift by standing or by pushing up with your leg muscles; this action removes the strain from the muscles in your back.

     Attention:

     Do not attempt to lift any objects that weigh more than 16 kg (35 lb) or objects that you think are too heavy for you.
- Do not perform any action that causes hazards to the customer, or that makes the equipment unsafe.
- Before you start the machine, ensure that other service representatives and the customer's personnel are not in a hazardous position.
- Place removed covers and other parts in a safe place, away from all personnel, while you are servicing the machine.
- Keep your tool case away from walk areas so that other people will not trip over it.
- Do not wear loose clothing that can be trapped in the moving parts of a machine. Ensure that your sleeves are fastened or rolled up above your elbows. If your hair is long, fasten it.
- Insert the ends of your necktie or scarf inside clothing or fasten it with a nonconductive clip, approximately 8 centimeters (3 inches) from the end.
- Do not wear jewelry, chains, metal-frame eyeglasses, or metal fasteners for your clothing.
  Remember: Metal objects are good electrical conductors.
- Wear safety glasses when you are: hammering, drilling, soldering, cutting wire, attaching springs, using solvents, or working in any other conditions that might be hazardous to your eyes.
- After service, reinstall all safety shields, guards, labels, and ground wires. Replace any safety device that is worn or defective.
- Reinstall all covers correctly before returning the machine to the customer.

Electrical safety



CAUTION:
Electrical current from power, telephone, and communication cables can be hazardous. To avoid personal injury or equipment damage, disconnect the attached power cords, telecommunication

© Copyright Lenovo 2013, 2015

systems, networks, and modems before you open the computer covers, unless instructed otherwise in the installation and configuration procedures.

Observe the following rules when working on electrical equipment.

Important: Use only approved tools and test equipment. Some hand tools have handles covered with a soft material that does not insulate you when working with live electrical currents. Many customers have, near their equipment, rubber floor mats that contain small conductive fibers to decrease electrostatic discharges. Do not use this type of mat to protect yourself from electrical shock.

- Find the room emergency power-off (EPO) switch, disconnecting switch, or electrical outlet. If an electrical accident occurs, you can then operate the switch or unplug the power cord quickly.
- Do not work alone under hazardous conditions or near equipment that has hazardous voltages.
- Disconnect all power before:
  - Performing a mechanical inspection
  - Working near power supplies
  - Removing or installing Field Replaceable Units (FRUs)
- Before you start to work on the machine, unplug the power cord. If you cannot unplug it, ask the customer to power-off the wall box that supplies power to the machine and to lock the wall box in the off position.
- If you need to work on a machine that has exposed electrical circuits, observe the following precautions:
  - Ensure that another person, familiar with the power-off controls, is near you.
    Remember: Another person must be there to switch off the power, if necessary.
  - Use only one hand when working with powered-on electrical equipment; keep the other hand in your pocket or behind your back.
    Remember: There must be a complete circuit to cause electrical shock. By observing the above rule, you may prevent a current from passing through your body.
  - When using a tester, set the controls correctly and use the approved probe leads and accessories for that tester.
  - Stand on suitable rubber mats (obtained locally, if necessary) to insulate you from grounds such as metal floor strips and machine frames.

  Observe the special safety precautions when you work with very high voltages; these instructions are in the safety sections of maintenance information. Use extreme care when measuring high voltages.
- Regularly inspect and maintain your electrical hand tools for safe operational condition.
- Do not use worn or broken tools and testers.
- *Never assume* that power has been disconnected from a circuit. First, *check* that it has been powered-off.
- Always look carefully for possible hazards in your work area. Examples of these hazards are moist floors, nongrounded power extension cables, power surges, and missing safety grounds.
- Do not touch live electrical circuits with the reflective surface of a plastic dental mirror. The surface is conductive; such touching can cause personal injury and machine damage.
- Do not service the following parts with the power on when they are removed from their normal operating places in a machine:
  - Power supply units
  - Pumps
  - Blowers and fans
  - Motor generators

  and similar units. (This practice ensures correct grounding of the units.)
- If an electrical accident occurs:

– Use caution; do not become a victim yourself.
– Switch off power.
– Send another person to get medical aid.

Safety inspection guide

The intent of this inspection guide is to assist you in identifying potentially unsafe conditions on these products. Each machine, as it was designed and built, had required safety items installed to protect users and service personnel from injury. This guide addresses only those items. However, good judgment should be used to identify potential safety hazards due to attachment of features or options not covered by this inspection guide.

If any unsafe conditions are present, you must determine how serious the apparent hazard could be and whether you can continue without first correcting the problem.

Consider these conditions and the safety hazards they present:

- Electrical hazards, especially primary power (primary voltage on the frame can cause serious or fatal electrical shock).
- Explosive hazards, such as a damaged CRT face or bulging capacitor
- Mechanical hazards, such as loose or missing hardware

The guide consists of a series of steps presented in a checklist. Begin the checks with the power off, and the power cord disconnected.

Checklist:

1. Check exterior covers for damage (loose, broken, or sharp edges).
2. Power-off the computer. Disconnect the power cord.
3. Check the power cord for:
   a. A third-wire ground connector in good condition. Use a meter to measure third-wire ground continuity for 0.1 ohm or less between the external ground pin and frame ground.
   b. The power cord should be the appropriate type as specified in the parts listings.
   c. Insulation must not be frayed or worn.
4. Remove the cover.
5. Check for any obvious alterations. Use good judgment as to the safety of any alterations.
6. Check inside the unit for any obvious unsafe conditions, such as metal filings, contamination, water or other liquids, or signs of fire or smoke damage.
7. Check for worn, frayed, or pinched cables.
8. Check that the power-supply cover fasteners (screws or rivets) have not been removed or tampered with.

Handling electrostatic discharge-sensitive devices

Any computer part containing transistors or integrated circuits (ICs) should be considered sensitive to electrostatic discharge (ESD). ESD damage can occur when there is a difference in charge between objects. Protect against ESD damage by equalizing the charge so that the machine, the part, the work mat, and the person handling the part are all at the same charge.

Notes:

1. Use product-specific ESD procedures when they exceed the requirements noted here.
2. Make sure that the ESD protective devices you use have been certified (ISO 9000) as fully effective.

When handling ESD-sensitive parts:

- Keep the parts in protective packages until they are inserted into the product.
- Avoid contact with other people while handling the part.
- Wear a grounded wrist strap against your skin to eliminate static on your body.
- Prevent the part from touching your clothing. Most clothing is insulative and retains a charge even when you are wearing a wrist strap.
- Use the black side of a grounded work mat to provide a static-free work surface. The mat is especially useful when handling ESD-sensitive devices.
- Select a grounding system, such as those listed below, to provide protection that meets the specific service requirement.

  Note: The use of a grounding system is desirable but not required to protect against ESD damage.

  – Attach the ESD ground clip to any frame ground, ground braid, or green-wire ground.
  – Use an ESD common ground or reference point when working on a double-insulated or battery-operated system. You can use coax or connector-outside shells on these systems.
  – Use the round ground-prong of the ac plug on ac-operated computers.

Grounding requirements

Electrical grounding of the computer is required for operator safety and correct system function. Proper grounding of the electrical outlet can be verified by a certified electrician.

Safety notices (multi-lingual translations)

The caution and danger safety notices in this section are provided in the following languages:

- English
- Arabic
- Brazilian/Portuguese
- Chinese (simplified)
- Chinese (traditional)
- French
- German
- Hebrew
- Italian
- Korean
- Spanish



DANGER

Electrical current from power, telephone and communication cables is hazardous.

To avoid a shock hazard:

- **Do not connect or disconnect any cables or perform installation, maintenance, or reconfiguration of this product during an electrical storm.**
- **Connect all power cords to a properly wired and grounded electrical outlet.**
- **Connect to properly wired outlets any equipment that will be attached to this product.**
- **When possible, use one hand only to connect or disconnect signal cables.**
- **Never turn on any equipment when there is evidence of fire, water, or structural damage.**
- **Disconnect the attached power cords, telecommunications systems, networks, and modems before you open the device covers, unless instructed otherwise in the installation and configuration procedure**s.
- **Connect and disconnect cables as described in the following tables when installing, moving, or opening covers on this product or attached devices.**

To Connect	To Disconnect
1. Turn everything OFF. 2. First, attach all cables to devices. 3. Attach signal cables to connectors. 4. Attach power cords to outlet. 5. Turn device ON.	1. Turn everything OFF. 2. First, remove power cords from outlet. 3. Remove signal cables from connectors. 4. Remove all cables from devices.



CAUTION:
When replacing the lithium battery, use only Part Number 45C1566 or an equivalent type battery recommended by the manufacturer. If your system has a module containing a lithium battery, replace it only with the same module type made by the same manufacturer. The battery contains lithium and can explode if not properly used, handled, or disposed of. *Do not:*

- **Throw or immerse into water**
- **Heat to more than 100°C (212°F)**
- **Repair or disassemble**

Dispose of the battery as required by local ordinances or regulations.



CAUTION:
When laser products (such as CD-ROMs, DVD-ROM drives, fiber optic devices, or transmitters) are installed, note the following:

- **Do not remove the covers. Removing the covers of the laser product could result in exposure to hazardous laser radiation. There are no serviceable parts inside the device.**
- **Use of controls or adjustments or performance of procedures other than those specified herein might result in hazardous radiation exposure.**

DANGER

Some laser products contain an embedded Class 3A or Class 3B laser diode. Note the following:

Laser radiation when open. Do not stare into the beam, do not view directly with optical instruments, and avoid direct exposure to the beam.





≥18 kg (37 lbs) ≥32 kg (70.5 lbs) ≥55 kg (121.2 lbs)

CAUTION:
Use safe practices when lifting.



CAUTION:
The power control button on the device and the power switch on the power supply do not turn off the electrical current supplied to the device. The device also might have more than one power cord. To remove all electrical current from the device, ensure that all power cords are disconnected from the power source.

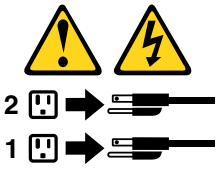



خـــطر

التيـار الكـهربـي المـوجـود بمصـدر الطـاقـة أو أجـهزة التليفـون أو أسـلاك الإتـصالات يشـكل خـطورة.

لـتفادي مخـاطـر الصـدمـات الكـهربـائـية:

لا تحاول توصيل أو فصل أي أسـلاك أو القـيام بعـمليـات تـركيب أو صـيانـة أوإعـادة توصـيف لـهذا المنتج أثـناء وجـود عاصـفة كـهربـائـية.

يجـب تـوصـيل كـل أسـلاك الكـهربـاء فـي مخـارج كـهربـاء ذات تـوصـيلات أسـلاك وتـوصـيلات أرضـية صحيـحة
يجـب تـوصـيل أي جـهاز سـيتم الحـاقه بـهذا المـنتج فـي مخارج كـهربـاء ذات تـوصـيلات أسـلاك صحيحة.

وإن أمـكن يـجب اسـتخدام يـد واحـدة فـقط فـي تـوصـيل أو فصـل أسلاك الإشـارة.

لا تحـاول تشغـيل أي جـهاز إذا كـان هنـاك أثـر لحـرق أو مـياه أو تـلف بالمكـونـات
يجـب فصـل أسـلاك الكـهربـاء وأنـظمة الاتصـالات وشـبكات الاتصـال وأجـهزة المـودم الملحـقة قـبل فـتح أغطية الجهاز، مـالـم يـتم طـلب خـلاف ذلك فـي التـعليـمات الخـاصة بالتـركيب والتـوصـيف.
قم بتوصيل وفصل الأسلاك كما هو موضح في الجدول التالي وذلك عند القيام بعمليات التركيب أو النقل أو فتح أغطية هذا المنتج أو الأجهزة الملحقة.

للتوصيل:	للفصل:
قم بإيقاف كل شيء.	قم بإيقاف كل شيء.
أولا، قم بتوصيل كل الأسلاك بالأجهزة.	أولا، قم بفصل كل أسلاك الكهرباء من المخرج.
قم بتوصيل أسلاك الإشارة في لموصلات.	قم بفصل أسلاك الإشارة من الموصلات.
قم بتوصيل أسلاك الكهرباء في المخارج.	قم بفصل كل الأسلاك من الأجهزة.
قم بتشغيل الجهاز.	



تنبيـــه :
عند استبدال البطارية الليثيوم، استخدم فقط رقم الجزء الخاص Part Number 45C1566 أو نوع أخر يكون على نفس مستوى الكفاءة يحدده لك المصنع.
اذا كان النظام الخاص يستخدم معه بطارية ليثيوم قم باستبدالها بنفس النوع الذي تم صناعته من خلال نفس المصنع. تحتوي البطارية على مادة الليثيوم ويمكن أن تنفجرفي حالة عدم استخدامها أو التعامل معها بطريقة صحيحة أو عند التخلص منها بطريقة خطأ.

لا تقم بـــ:
- **القاء البطارية أو غمرها في الماء**
- **تسخينها أعلى من ١٠٠ درجة مئوية°و(٢١٢ ° فهرنـهيت)**
- **بتصليحها أو فكها**

تخلص من البطارية طبقا للقانون أو النظام المحلي .



تنبيـــه :
أثناء تركيب منتجات ليزر (مثل CD-ROMsأو وحدة تشغيل DVDأو أجهزة Fiber Optic أو وحدات الارسال) يجب مراعاة الآتي:

لا تنزع الأغطية. قد ينتج عن نزع أغطية منتج الليزر انفجار أشعة الليزر شديدة الخطورة.
لا يوجد أجزاء يمكن تغييرها داخل الجهاز. قد ينتج عن استخدام تحكمات أو تعديلات أو عمل أي تصرفات أخرى تخالف ما هو محددا هنا الى انفجار أشعة شديدة الخطورة.



خطـــر

تحتوى بعض منتجات الليزر على الفئة دايود ليزر مدمج من الفئة Class 3Aأو Class 3B. يجب مراعاة الآتي .

أشعة الليزر عند الفتح. لا تحدق الى الاشعاع و لا تنظر اليه مباشرة بواسطة أي أجهزة مرئية وتجنب التعرض المباشر للاشعاع .



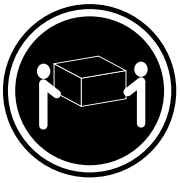

≥18 kg (37 lbs)



≥32 kg (70.5 lbs)



≥55 kg (121.2 lbs)

تنبيه :
يجب استخدام ممارسات آمنة عند الرفع



تنبيـــه :
لا يقم زر التحكم في التشغيل الموجود على الجهاز والمفتاح الكهربائي الموجود على لوحة التحكم بايقاف التيار الكهربائي المار بالجهاز. قد يكون للجهاز أكثر من سلك كهربائي واحد.
لايقاف التيار الكهربائي المار بالجهاز، تأكد من فصل جميع أسلاك الكهرباء من مصدر الكهرباء .

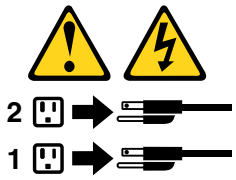



PERIGO

A corrente elétrica proveniente de cabos de alimentação, de telefone e de comunicações é perigosa.

Para evitar risco de choque elétrico:

- Não conecte nem desconecte nenhum cabo ou execute instalação, manutenção ou reconfiguração deste produto durante uma tempestade com raios.
- Conecte todos os cabos de alimentação a tomadas elétricas corretamente instaladas e aterradas.
- Todo equipamento que for conectado a este produto deve ser conectado a tomadas corretamente instaladas.
- Quando possível, utilize apenas uma das mãos para conectar ou desconectar cabos de sinal.
- Nunca ligue nenhum equipamento quando houver evidência de fogo, água ou danos estruturais.
- Antes de abrir tampas de dispositivos, desconecte cabos de alimentação, sistemas de telecomunicação, redes e modems conectados, a menos que especificado de maneira diferente nos procedimentos de instalação e configuração.
- Conecte e desconecte os cabos conforme descrito na tabela apresentada a seguir ao instalar, mover ou abrir tampas deste produto ou de dispositivos conectados.

Para Conectar:	**Para Desconectar:**
1. DESLIGUE Tudo. 2. Primeiramente, conecte todos os cabos aos dispositivos. 3. Conecte os cabos de sinal aos conectores. 4. Conecte os cabos de alimentação às tomadas. 5. LIGUE os dispositivos.	1. DESLIGUE Tudo. 2. Primeiramente, remova os cabos de alimentação das tomadas. 3. Remova os cabos de sinal dos conectores. 4. Remova todos os cabos dos dispositivos.



CUIDADO:

Ao substituir a bateria de lítio, utilize apenas uma bateria com Número de Peça 45C1566 ou um tipo de bateria equivalente recomendado pelo Se o seu sistema possui um módulo com uma bateria de lítio, substitua-o apenas por um módulo do mesmo tipo e do mesmo fabricante. A bateria contém lítio e pode explodir se não for utilizada, manuseada ou descartada de maneira correta.

Não:

- Jogue ou coloque na água
- Aqueça a mais de 100°C (212°F)
- Conserte nem desmonte

Descarte a bateria conforme requerido pelas leis ou regulamentos locais.



PRECAUCIÓN:

Quando produtos a laser (como unidades de CD-ROMs, unidades de DVD-ROM, dispositivos de fibra ótica ou transmissores) estiverem instalados, observe o seguinte:

- Não remova as tampas. A remoção das tampas de um produto a laser pode resultar em exposição prejudicial à radiação de laser. Não existem peças que podem ser consertadas no interior do dispositivo.

- A utilização de controles ou ajustes ou a execução de procedimentos diferentes dos especificados aqui pode resultar em exposição prejudicial à radiação.

PERIGO

Alguns produtos a laser contêm diodo de laser integrado da Classe 3A ou da Classe 3B. Observe o seguinte:

Radiação a laser quando aberto. Não olhe diretamente para o feixe a olho nu ou com instrumentos ópticos e evite exposição direta ao feixe.





≥18 kg (37 lbs) ≥32 kg (70.5 lbs) ≥55 kg (121.2 lbs)

CUIDADO:

Utilize procedimentos de segurança para levantar equipamentos.



CUIDADO:

O botão de controle de alimentação do dispositivo e o botão para ligar/desligar da fonte de alimentação não desligam a corrente elétrica fornecida ao dispositivo. O dispositivo também pode ter mais de um cabo de alimentação. Para remover toda a corrente elétrica do dispositivo, assegure que todos os cabos de alimentação estejam desconectados da fonte de alimentação.

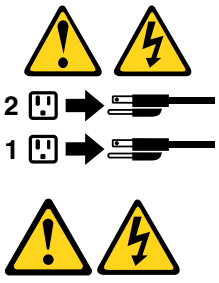

危险

电源、电话和通信电缆中的电流是危险的。

为避免电击危险：

- 请勿在雷电期间连接或断开任何电缆的连接，或者对本产品进行安装、维护或重新配置。
- 将所有电源线连接到正确连线和妥善接地的电源插座。
- 将所有要连接到该产品的设备连接到正确连线的插座。
- 如果可能，请仅使用一只手来连接或断开信号电缆的连接。
- 切勿在有火、水、结构损坏迹象的情况下开启任何设备。
- 在打开设备外盖之前请断开已连接的电源线、远程通信系统、网络和调制解调器，除非在安装和配置过程中另有说明。
- 当安装、移动或打开该产品或连接设备的外盖时，请按照下表所述来连接或断开电缆的连接。

要连接	要断开连接
1. 切断所有电源。 2. 首先将所有电缆连接到设备。 3. 将信号电缆连接到接口。 4. 将电源线连接到插座。 5. 开启设备。	1. 切断所有电源。 2. 首先从插座上拔出电源线。 3. 从接口上拔出信号电缆。 4. 从设备上拔出所有电缆。



警告：
更换锂电池时，请仅使用部件号为 45C1566 的电池或制造商推荐的同类电池。如果您的系统有包含锂电池的模块，请仅使用同一制造商生产的相同模块类型来替换该模块。该电池中含有锂，如果使用、操作或处理不当，可能会发生爆炸。

切勿：

- 投入或浸入水中
- 加热到 100℃（212℉）以上
- 维修或拆卸

请按照当地法令或条例的要求处理电池。



警告：
安装激光产品（例如 CD-ROM、DVD-ROM 驱动器、光纤设备或发射设备）时，请注意以下声明：

- 请勿卸下外盖。卸下激光产品的外盖可能导致遭受激光辐射的危险。该设备内没有可维修的部件。
- 如果不按照此处指定的过程进行控制、调整或操作，则有可能导致遭受辐射的危险。



危险

某些激光产品包含嵌入式 3A 类或 3B 类激光二极管。请注意以下声明：

打开后有激光辐射。请勿注视光束，请勿直接用光学仪器查看，并请避免直接暴露在光束中。





≥18 千克（37 磅）



≥32 千克（70.5 磅）



≥55 千克（121.2 磅）

警告：
抬起时请采取安全措施。



警告：
设备上的电源控制按钮和电源上的电源开关不会切断供给该设备的电流。该设备还可能有多条电源线。要切断该设备的所有电流，请确保所有电源线都与电源断开连接。

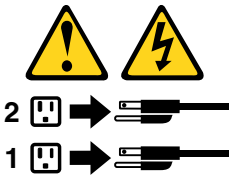



危险

電源、電話及通訊纜線上的電流都具有危險性。
若要避免觸電危險：
- 請勿在雷雨期間，連接或拔除纜線、執行安裝、維護或重新配置本產品。
- 將所有電源線連接到正確配線及接地的電源插座。
- 任何與本產品連接的設備都必須連接到配線妥當的電源插座。
- 請盡可能用單手連接或拔除信號線。
- 發生火災、水災或結構損害時，絕對不要開啟任何設備。
- 除非在安裝及配置程序中另有指示，否則在開啟裝置機蓋之前，請拔掉連接的電源線、電信系統、網路及數據機。
- 安裝、移動或開啟本產品或附屬裝置的機蓋時，請遵循下列說明連接及拔掉纜線。

連線	切斷連線
1. 關閉所有開關。 2. 首先，連接所有接線到裝置。 3. 連接信號線到接頭。 4. 連接電源線到插座。 5. 開啟裝置。	1. 關閉所有開關。 2. 首先，拔掉插座上的電源線。 3. 拔掉接頭上的信號線。 4. 拔掉裝置上所有接線。

警告：
更換鋰電池時，請僅使用產品編號 **45C1566** 或製造商所建議的同類型電池。
如果您的系統中含有鋰電池模組，請僅使用同一家製造商所生產的相同模組進行更換。
如果未以正確方式使用、處理或棄置含鋰的電池，會有爆炸的危險。
請勿：

- 沾溼或浸入水中
- 置於 **100°C (212°F)** 以上的高溫環境
- 修理或拆開

請按照各地區有關廢棄電池的法令和規定處理舊電池。

警告：
- 請勿移除機蓋。移除雷射產品的機蓋，可能會導致暴露在危險的雷射輻射中。裝置內部並無可自行維修的零件。
- 利用或執行非本文中所指定的控制、調整及執行程序，可能會導致危險的輻射外洩。

危險

部分雷射產品含有內嵌式 **Class 3A** 或 **Class 3B** 雷射二極體。請注意下列事項：
在開啟光碟機時，會發生雷射輻射。請勿直視光束或用光學儀器直接檢視，並避免直接暴露在光束中。



≥ 18 公斤（37 磅） ≥ 32 公斤（70.5 磅） ≥ 55 公斤（121.2 磅）

警告：
搬運時請注意安全。

警告：
裝置上的電源控制按鈕及電源供應器上的電源開關，無法關閉裝置所產生的電流。
該裝置可能有多條電源線。若要除去裝置流出的所有電流，請確認已切斷所有電源線的電源。

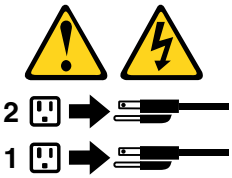

DANGER

Le courant électrique provenant de l'alimentation, du téléphone et des câbles de transmission peut présenter un danger.

Pour éviter tout risque de choc électrique :

- Ne manipulez aucun câble et n'effectuez aucune opération d'installation, d'entretien ou de reconfiguration de ce produit au cours d'un orage.
- Branchez tous les cordons d'alimentation sur un socle de prise de courant correctement câblé et mis à la terre.
- Branchez sur des socles de prise de courant correctement câblés tout équipement connecté à ce produit.
- Lorsque cela est possible, n'utilisez qu'une seule main pour connecter ou déconnecter les câbles d'interface.
- Ne mettez jamais un équipement sous tension en cas d'incendie ou d'inondation, ou en présence de dommages matériels.
- Avant de retirer les carters de l'unité, mettez celle-ci hors tension et déconnectez ses cordons d'alimentation, ainsi que les câbles qui la relient aux réseaux, aux systèmes de télécommunication et aux modems (sauf instruction contraire mentionnée dans les procédures d'installation et de configuration).
- Lorsque vous installez, que vous déplacez, ou que vous manipulez le présent produit ou des périphériques qui lui sont raccordés, reportez-vous aux instructions ci-dessous pour connecter et déconnecter les différents cordons.

Connexion	Déconnexion
1. Mettez les unités HORS TENSION. 2. Commencez par brancher tous les cordons sur les unités. 3. Branchez les câbles d'interface sur des connecteurs. 4. Branchez les cordons d'alimentation sur des prises. 5. Mettez les unités SOUS TENSION.	1. Mettez les unités HORS TENSION. 2. Débranchez les cordons d'alimentation des prises. 3. Débranchez les câbles d'interface des connecteurs. 4. Débranchez tous les câbles des unités.



ATTENTION:

Remplacer la pile au lithium usagée par une pile de référence identique exclusivement, (référence 45C1566), ou suivre les instructions du fabricant qui en définit les équivalences. Si votre système est doté d'un module contenant une pile au lithium, vous devez le remplacer uniquement par un module identique, produit par le même fabricant. La pile contient du lithium et peut exploser en cas de mauvaise utilisation, de mauvaise manipulation ou de mise au rebut inappropriée.

Ne pas :

- **la jeter à l'eau,**
- **l'exposer à des températures supérieures à 100°C,**
- **chercher à la réparer ou à la démonter.**

Ne pas mettre la pile à la poubelle. Pour la mise au rebut, se reporter à la réglementation en vigueur.

ATTENTION:

Si des produits à laser (tels que des unités de CD-ROM, de DVD-ROM, des unités à fibres optiques, ou des émetteurs) sont installés, prenez connaissance des informations suivantes :

- **Ne retirez pas le carter. En ouvrant l'unité de CD-ROM ou de DVD-ROM, vous vous exposez au rayonnement dangereux du laser. Aucune pièce de l'unité n'est réparable.**
- **Pour éviter tout risque d'exposition au rayon laser, respectez les consignes de réglage et d'utilisation des commandes, ainsi que les procédures décrites dans le présent manuel.**

DANGER

Certains produits à laser contiennent une diode à laser intégrée de classe 3A ou 3B. Prenez connaissance des informations suivantes:

Rayonnement laser lorsque le carter est ouvert. Evitez toute expositiondirecte au rayon laser. Evitez de regarder fixement le faisceau ou del'observer à l'aide d'instruments optiques.



≥18 kg (37 lbs) ≥32 kg (70.5 lbs) ≥55 kg (121.2 lbs)

ATTENTION:

Soulevez la machine avec précaution.

ATTENTION:

L'interrupteur de contrôle d'alimentation de l'unité et l'interrupteur dubloc d'alimentation ne coupent pas le courant électrique alimentantl'unité. En outre, le système peut être équipé de plusieurs cordonsd'alimentation. Pour mettre l'unité hors tension, vous devez déconnectertous les cordons de la source d'alimentation.

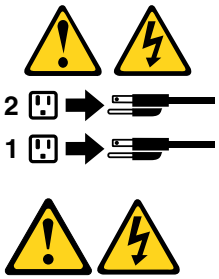

VORSICHT

An Netz-, Telefon- und Datenleitungen können gefährliche Spannungen anliegen.

Aus Sicherheitsgründen:

- **Bei Gewitter an diesem Gerät keine Kabel anschließen oder lösen. Ferner keine Installations-, Wartungs- oder Rekonfigurationsarbeiten durchführen.**
- **Gerät nur an eine Schutzkontaktsteckdose mit ordnungsgemäß geerdetem Schutzkontakt anschließen.**
- **Alle angeschlossenen Geräte ebenfalls an Schutzkontaktsteckdosen mit ordnungsgemäß geerdetem Schutzkontakt anschließen.**
- **Die Signalkabel nach Möglichkeit einhändig anschließen oder lösen, um einen Stromschlag durch Berühren von Oberflächen mit unterschiedlichem elektrischem Potenzial zu vermeiden.**
- **Geräte niemals einschalten, wenn Hinweise auf Feuer, Wasser oder Gebäudeschäden vorliegen.**
- **Die Verbindung zu den angeschlossenen Netzkabeln, Telekommunikationssystemen, Netzwerken und Modems ist vor dem Öffnen des Gehäuses zu unterbrechen, sofern in den Installations- und Konfigurationsprozeduren keine anders lautenden Anweisungen enthalten sind.**
- **Zum Installieren, Transportieren und Öffnen der Abdeckungen des Computers oder der angeschlossenen Einheiten die Kabel gemäß der folgenden Tabelle anschließen und abziehen.**

Zum Anschließen der Kabel gehen Sie wie folgt vor	Zum Abziehen der Kabel gehen Sie wie folgt vor
1. Schalten Sie alle Einheiten AUS. 2. Schließen Sie erst alle Kabel an die Einheiten an. 3. Schließen Sie die Signalkabel an die Buchsen an. 4. Schließen Sie die Netzkabel an die Steckdose an. 5. Schalten Sie die Einheit EIN.	1. Schalten Sie alle Einheiten AUS. 2. Ziehen Sie zuerst alle Netzkabel aus den Netzsteckdosen. 3. Ziehen Sie die Signalkabel aus den Buchsen. 4. Ziehen Sie alle Kabel von den Einheiten ab.



CAUTION:

Eine verbrauchte Lithiumbatterie nur durch eine Batterie mit der Teilenummer 45C1566 oder eine gleichwertige, vom Hersteller empfohlene Batterie ersetzen. Enthält das System ein Modul mit einer Lithiumbatterie, dieses nur durch ein Modul desselben Typs und von demselben Hersteller ersetzen. Die Batterie enthält Lithium und kann bei unsachgemäßer Verwendung, Handhabung oder Entsorgung explodieren.

Die Batterie nicht:

- mit Wasser in Berührung bringen.

- über 100 C erhitzen.
- reparieren oder zerlegen.

Die örtlichen Bestimmungen für die Entsorgung von Sondermüll beachten.

ACHTUNG:

Bei der Installation von Lasergeräten (wie CD-ROM-Laufwerken, DVD- aufwerken, Einheiten mit Lichtwellenleitertechnik oder Sendern) Folgendes beachten:

- **Die Abdeckungen nicht entfernen. Durch Entfernen der Abdeckungen des Lasergeräts können gefährliche Laserstrahlungen freigesetzt werden. Das Gerät enthält keine zu wartenden Teile.**
- **Werden Steuerelemente, Einstellungen oder Durchführungen von Prozeduren anders als hier angegeben verwendet, kann gefährliche Laserstrahlung auftreten.**

VORSICHT

Einige Lasergeräte enthalten eine Laserdiode der Klasse 3A oder 3B. Beachten Sie Folgendes:

Laserstrahlung bei geöffneter Verkleidung. Nicht in den Strahl blicken. Keine Lupen oder Spiegel verwenden. Strahlungsbereich meiden.



≥18 kg



≥32 kg



≥55 kg

ACHTUNG:

Arbeitsschutzrichtlinien beim Anheben der Maschine beachten.

ACHTUNG:

Mit dem Netzschalter an der Einheit und am Netzteil wird die Stromversorgung für die Einheit nicht unterbrochen. Die Einheit kann auch mit mehreren Netzkabeln ausgestattet sein. Um die Stromversorgung für die Einheit vollständig zu unterbrechen, müssen alle zum Gerät führenden Netzkabel vom Netz getrennt werden.

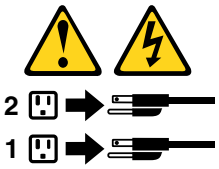





סכנה

זרם חשמלי המועבר בכבלי חשמל, טלפון ותקשורת הוא מסוכן.

כדי להימנע מסכנת התחשמלות:

- אל תחברו או תנתקו כבלים, ואל תבצעו פעולת התקנה, תחזוקה או שינוי תצורה במוצר זה במהלך סופת ברקים.
- חברו את כל כבלי החשמל לשקע חשמל מחווט ומוארק כהלכה.
- חברו כל ציוד שיחובר למוצר זה לשקעי חשמל מחווטים כהלכה.
- במידת האפשר, השתמשו ביד אחת בלבד לחיבור או לניתוק של כבלי אותות.
- לעולם אל תפעילו ציוד כלשהו כאשר יש עדות לנזק מבני או לנזק כתוצאה מאש או ממים.
- נתקו את כבלי החשמל, מערכות התקשורת, התקני הרשת והמודמים המחוברים לפני פתיחת כיסויי ההתקן, אלא אם הליכי ההתקנה וקביעת התצורה מורים אחרת.
- בעת התקנה, העברה או פתיחת כיסויים במוצר זה או בהתקנים המחוברים, חברו ונתקו את הכבלים כמתואר בטבלה שלהלן.

כדי לחבר	כדי לנתק
1. כבו הכל.	1. כבו הכל.
2. ראשית, חברו את כל הכבלים להתקנים.	2. ראשית, נתקו את כבלי החשמל מהשקעים.
3. חברו את כבלי האותות למחברים.	3. נתקו את כבלי האותות מהמחברים.
4. חברו את כבלי החשמל לשקעים.	4. הסירו את כל הכבלים מההתקנים.
5. הפעילו את ההתקן.	



זהירות:
בעת החלפת סוללת הליתיום, השתמשו רק בסוללה בעלת מק"ט 45C1566 או בסוג תואם שהומלץ על ידי היצרן.
אם המערכת כוללת מודול המכיל סוללת ליתיום, החליפו אותו רק במודול מאותו סוג ומתוצרת אותו יצרן.
הסוללה מכילה ליתיום, ועלולה להתפוצץ אם לא משתמשים ומטפלים בה או משליכים אותה כיאות.

לעולם:

- אל תטבלו במים
- אל תחממו לטמפרטורה הגבוהה מ-$100^{o}C$ ($212^{o}F$)
- אל תתקנו או תפרקו

השליכו את הסוללה כנדרש לפי התקנות והחוקים המקומיים.



זהירות:
בעת התקנת מוצרי לייזר (כגון כונני תקליטורים ו-DVD, התקני סיב אופטי או משדרים), שימו לב לאזהרות הבאות:

- אל תסירו את הכיסויים. הסרת הכיסויים של מוצר הלייזר עלולה לגרום לחשיפה לקרינת לייזר מסוכנת.
  אין חלקים ברי טיפול בתוך ההתקן.
- שינויים, שימוש בבקרות או ביצוע הליכים אחרים מאלה המתוארים כאן, עלולים לגרום לחשיפה לקרינה מסוכנת.



סכנה

מוצרי לייזר מסוימים מכילים דיודת לייזר מסוג Class 3A או Class 3B. שימו לב לאזהרה הבאה:

כאשר הוא פתוח, המוצר פולט קרינת לייזר. אל תביטו ישירות בקרן, אל תביטו ישירות בעזרת ציוד אופטי, והימנעו מחשיפה לקרן.





≥ 55 ק"ג (121.2 ליב')



≥ 32 ק"ג (70.5 ליב')

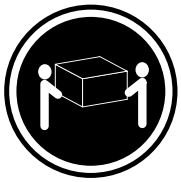

≥ 18 ק"ג (37 ליב')

זהירות:
השתמשו בהליכים
הנאותים בעת
הרמת הציוד.





זהירות:
לחצן ההפעלה של ההתקן ומתג ההפעלה של ספק החשמל אינם מפסיקים את זרם החשמל המסופק להתקן. בנוסף, ההתקן עשוי לכלול יותר מכבל חשמל אחד. כדי לסלק את כל הזרם החשמלי מההתקן, ודאו שכל כבלי החשמל מנותקים ממקור החשמל.

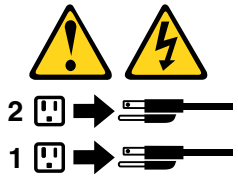



PERICOLO

La corrente elettrica proveniente dai cavi di alimentazione, del telefono e di comunicazione può essere pericolosa.

Per evitare il rischio di scosse elettriche:

- **Non collegare o scollegare qualsiasi cavo oppure effettuare l'installazione, la manutenzione o la riconfigurazione del prodotto durante un temporale.**
- **Collegare tutti i fili elettrici a una presa di alimentazione correttamente cablata e dotata di messa a terra.**
- **Collegare alle prese elettriche appropriate tutte le apparecchiature che verranno utilizzate per questo prodotto.**
- **Se possibile, utilizzare solo una mano per collegare o scollegare i cavi di segnale.**
- **Non accendere assolutamente apparecchiature in presenza di incendi, perdite d'acqua o danno strutturale.**
- **Scollegare i cavi di alimentazione, i sistemi di telecomunicazione, le reti e il modem prima di aprire i coperchi del dispositivo, salvo istruzioni contrarie relative alle procedure di installazione e configurazione.**
- **Collegare e scollegare i cavi come descritto nella seguente tabella quando vengono effettuate operazioni di installazione, spostamento o apertura dei coperchi di questo prodotto o delle unità collegate.**

Per collegarsi	Per scollegarsi
1. SPEGNERE le apparecchiature. 2. Innanzitutto, collegare tutti i cavi alle unità. 3. Collegare i cavi di segnale ai connettori. 4. Collegare i cavi di alimentazione alla presa. 5. Accendere l'unità.	1. SPEGNERE le apparecchiature. 2. Innanzitutto, rimuovere i cavi di alimentazione dalla presa. 3. Rimuovere i cavi di segnale dai connettori. 4. Rimuovere tutti i cavi dalle unità.



ATTENZIONE:

Quando si sostituisce la batteria al litio, utilizzare solo il Numero parte 45C1566 o un tipo di batteria equivalente consigliato dal produttore. Se sul sistema è presente un modulo che contiene una batteria al litio, sostituirlo solo con un tipo di modulo dello stesso tipo della stessa casa di produzione. La batteria contiene litio e può esplodere se usata, maneggiata o smaltita in modo non corretto.

Non:

- **Gettare o immergere la batteria nell'acqua**
- **Riscaldarla ad una temperatura superiore ai 100 gradi C (212 gradi F)**
- **Smontarla, ricaricarla o tentare di ripararla**

Le batterie usate vanno smaltite in accordo alla normativa in vigore (DPR 915/82 e successive disposizioni e disposizioni locali).

ATTENZIONE:

Quando vengono installati prodotti laser (quali CD-ROM, unità DVD-ROM, unità a fibre ottiche o trasmittenti), tener presente quanto segue:

- **Non rimuovere gli sportelli. L'apertura di un'unità laser può determinare l'esposizione a radiazioni laser pericolose. All'interno dell'unità non vi sono parti su cui effettuare l'assistenza tecnica.**
- **L'utilizzo di controlli, regolazioni o l'esecuzione di procedure non descritti nel presente manuale possono provocare l'esposizione a radiazioni pericolose.**

PERICOLO

Alcune unità laser contengono un diodo laser di Classe 3A o Classe 3B. Tener presente quanto segue:

Aprendo l'unità vengono emesse radiazioni laser. Non fissare il fascio, non guardarlo direttamente con strumenti ottici ed evitare l'esposizione al fascio.



≥18 kg ≥32 kg ≥55 kg

ATTENZIONE:

Prestare attenzione nel sollevare l'apparecchiatura.

ATTENZIONE:

Il pulsante di controllo dell'alimentazione presente sull'unità e l'interruttore dell'alimentatore non disattivano l'alimentazione corrente fornita all'unità. E' possibile che l'unità disponga di più cavi di alimentazione. Per disattivare l'alimentazione dall'unità, accertarsi che tutti i cavi di alimentazione siano scollegati dalla fonte di alimentazione.

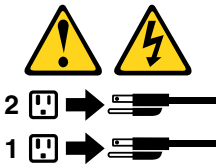



위험

전원, 전화, 통신 케이블의 전류는 위험합니다.

감전의 위험을 피하려면 다음과 같이 하십시오.

- 번개가 치는 날에는 케이블을 연결 또는 분리하거나 본 제품을 설치, 보수, 재구성하지 마십시오.

- 모든 전원 코드는 올바르게 접지된 전기 콘센트에 연결하십시오.

- 본 제품에 연결될 장치는 올바르게 배선된 콘센트에 연결하십시오.

- 신호 케이블을 연결 또는 분리할 때 가능하면 한 손만을 사용하십시오.

- 불 또는 물로 인한 손상이나 구조적인 손상이 있을 경우 장치의 전원을 절대 켜지 마십시오.

- 설치 및 구성 과정에 별도의 지시 사항이 없는 경우, 장치의 덮개를 열기 전에 연결된 전원 코드, 원격 통신 시스템, 네트워크, 모뎀을 분리하십시오.

- 본 제품이나 연결된 장치를 설치, 이동하거나 덮개를 열 때 다음 표와 같은 순서로 케이블을 연결하거나 분리하십시오.

연결할 때:	분리할 때:
1. 모든 장치의 전원을 끄십시오. 2. 먼저 모든 케이블을 장치에 연결하십시오. 3. 커넥터에 신호 케이블을 연결하십시오. 4. 콘센트에 전원 코드를 연결하십시오. 5. 장치의 전원을 켜십시오.	1. 모든 장치의 전원을 끄십시오. 2. 먼저 콘센트에서 전원 코드를 분리하십시오. 3. 커넥터에서 신호 케이블을 분리하십시오. 4. 장치에서 모든 케이블을 분리하십시오.



주의:
배터리를 교환할 때는 Part Number 45C1566 또는 제조업체에서 지정한 동일한 종류의 제품을 사용하십시오. 사용자의 시스템이 리튬 배터리를 포함하는 모듈일 경우, 동일한 제조업체에서 동일한 모듈 유형으로 생산된 제품으로 교체하십시오. 배터리에는 리튬이 함유되어 있어 잘못 사용, 취급 또는 폐기할 경우 폭발의 위험이 있습니다.

사고를 방지하려면 다음 사항을 준수하십시오.

- 배터리를 물 속에 던지거나 침수시키지 마십시오.

- 100℃(212°F) 이상 가열하지 마십시오.

- 수리하거나 분해하지 마십시오.

배터리를 폐기할 때는 법령 또는 회사의 안전 수칙에 따라 폐기하십시오.



주의:
CD-ROM, DVD-ROM 장치, 광섬유 장치 또는 송신 장치와 같은 레이저 제품을 설치할 때, 다음과 같은 취급 주의사항을 참고하십시오.

- 덮개를 열지 마십시오. 덮개를 열면 레이저 복사 에너지에 노출될 위험이 있습니다. 장치 내부에는 사용자가 조정하거나 수리할 수 있는 부품이 없습니다.

- 규정된 것 이외의 절차 수행, 제어 조정 등의 행위로 인해 해로운 레이저 복사에 노출될 수 있습니다.



위험

일부 장비에는 임베디드 클래스 3A 또는 클래스 3B 레이저 다이오드가 있습니다. 다음 주의사항에 유의하십시오.

드라이브가 열리면 레이저 복사 에너지가 방출됩니다. 광선이 눈에 직접 쏘이지 않도록 하십시오. 나안 또는 광학 기구를 착용한 상태에서 광선을 직접 바라보지 않도록 하십시오.





≥18 kg (37 lbs)



≥32 kg (70.5 lbs)



≥55 kg (121.2 lbs)

주의:
제품을 들어 올릴 때
안전 규제를 따르십시오.



주의:
장치의 전원 제어 버튼 및 전원 공급 장치의 전원 스위치를 사용하여 장치에 공급되는 전기를 차단하지 마십시오. 장치는 둘 이상의 코드를 가지고 있을 수 있습니다. 장치에서 모든 전원을 차단하려면 콘센트에서 코드가 모두 분리되어 있는지 확인하십시오.

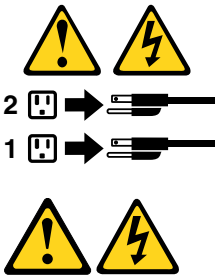

PELIGRO

La corriente eléctrica procedente de cables de alimentación, teléfonos y cables de comunicación puede ser peligrosa.

Para evitar el riesgo de descarga eléctrica:

- **No conecte ni desconecte los cables ni realice ninguna tarea de instalación, mantenimiento o reconfiguración de este producto durante una tormenta eléctrica.**
- **Conecte todos los cables de alimentación a tomas de corriente debidamente cableadas y conectadas a tierra.**
- **Cualquier equipo que se conecte a este producto también debe conectarse a tomas de corriente debidamente cableadas.**
- **Siempre que sea posible, utilice una sola mano para conectar o desconectar los cables de señal.**

- **No encienda nunca un equipo cuando hay señales de fuego, agua o daños estructurales.**
- **Desconecte los cables de alimentación, los sistemas de telecomunicaciones, las redes y los módems conectados antes de abrir las cubiertas de los dispositivos, a menos que se indique lo contrario en los procedimientos de instalación y configuración.**
- **Conecte y desconecte los cables, como se describe en la tabla siguiente, cuando instale, mueva o abra las cubiertas de este producto o de los dispositivos conectados.**

Para conectar	Para desconectar
1. APÁGUELO todo. 2. En primer lugar, conecte todos los cables a los dispositivos. 3. Conecte los cables de señal a los conectores. 4. Enchufe los cables de alimentación a las tomas de corriente. 5. Encienda el dispositivo.	1. APÁGUELO todo. 2. En primer lugar, desenchufe los cables de alimentación de las tomas de corriente. 3. Desconecte los cables de señal de los conectores. 4. Desconecte todos los cables de los dispositivos.



PRECAUCIÓN:

Cuando sustituya una batería de litio, utilice solamente una batería número de pieza 45C1566 u otra de tipo equivalente recomendada por el fabricante. Si su sistema dispone de un módulo que contiene una batería de litio, reemplácelo sólo con el mismo tipo de módulo, del mismo fabricante. La batería contiene litio y puede explotar si no se utiliza, manipula o desecha correctamente.

No debe:

- **Arrojarla al agua o sumergirla en ella**
- **Exponerla a temperaturas superiores a 100°C (212°F)**
- **Repararla o desmontarla**

Deshágase de la batería según especifiquen las leyes o normas locales.



PRECAUCIÓN:

Cuando haya productos láser (como unidades de CD-ROM, unidades de DVD, dispositivos de fibra óptica o transmisores) instalados, tenga en cuenta lo siguiente:

- **No quite las cubiertas. Si quita las cubiertas del producto láser, podría quedar expuesto a radiación láser peligrosa. Dentro del dispositivo no existe ninguna pieza que requiera servicio técnico.**
- **Si usa controles o ajustes o realiza procedimientos que no sean los especificados aquí, podría exponerse a radiaciones peligrosas.**



PELIGRO

Algunos productos láser tienen incorporado un diodo láser de clase 3A o clase 3B. Tenga en cuenta lo siguiente:

Cuando se abre, queda expuesto a radiación láser. No mire directamente al rayo láser, ni siquiera con instrumentos ópticos, y evite exponerse directamente al rayo láser.





≥18 kg ≥32 kg ≥55 kg

PRECAUCIÓN:

Adopte procedimientos seguros al levantar el equipo.



PRECAUCIÓN:

El botón de control de alimentación del dispositivo y el interruptor de alimentación de la fuente de alimentación no desconectan la corriente eléctrica suministrada al dispositivo. Además, el dispositivo podría tener más de un cable de alimentación. Para suprimir toda la corriente eléctrica del dispositivo, asegúrese de que todos los cables de alimentación estén desconectados de la toma de corriente.

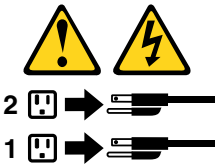

Chapter 2. General information

This chapter provides general information that applies to all machine types supported by this publication.

Specifications

This section lists the physical specifications for your computer.

For machine types: 10A0, 10A1, 10A6, 10A7, 10AG, 10AK, 10AL, and 10BE

Dimensions

Width: 175 mm (6.89 inches)

Height: 414 mm (16.30 inches)

Depth: 442 mm (17.40 inches)

Weight

Maximum configuration as shipped: 11.2 kg (24.69 lb)

Environment

- Air temperature:

  Operating: 10°C to 35°C (50°F to 95°F)

  Storage in original shipping package: -40°C to 60°C (-40°F to 140°F)

  Storage without package: -10°C to 60°C (14°F to 140°F)
- Humidity:

  Operating: 20% to 80% (non-condensing)

  Storage: 20% to 90% (non-condensing)
- Altitude:

  Operating: -15.2 to 3048 m (-50 to 10 000 ft)

  Storage: -15.2 to 10 668 m (-50 to 35 000 ft)

Electrical input

- Input voltage:
  - Low range:

    Minimum: 100 V ac

    Maximum: 127 V ac

    Input frequency range: 50/60 Hz
  - High range:

    Minimum: 200 V ac

    Maximum: 240 V ac

    Input frequency range: 50/60 Hz

© Copyright Lenovo 2013, 2015

For machine types: 10A2, 10A3, 10A8, 10A9, 10AH, 10AJ, 10AM, and 10AN

Dimensions

Width: 102 mm (4.02 inches)

Height: 338 mm (13.31 inches)

Depth: 375 mm (14.76 inches)

Weight

Maximum configuration as shipped: 7.8 kg (17.20 lb)

Environment

- Air temperature:

  Operating: 10°C to 35°C (50°F to 95°F)

  Storage in original shipping package: -40°C to 60°C (-40°F to 140°F)

  Storage without package: -10°C to 60°C (14°F to 140°F)
- Humidity:

  Operating: 20% to 80% (non-condensing)

  Storage: 20% to 90% (non-condensing)
- Altitude:

  Operating: -15.2 to 3048 m (-50 to 10 000 ft)

  Storage: -15.2 to 10 668 m (-50 to 35 000 ft)

Electrical input

- Input voltage:
  - Low range:

    Minimum: 100 V ac

    Maximum: 127 V ac

    Input frequency range: 50/60 Hz
  - High range:

    Minimum: 200 V ac

    Maximum: 240 V ac

    Input frequency range: 50/60 Hz

For machine types: 10A4, 10A5, 10AA, 10AB, 10DF, 10DG, 10DH, 10DJ, 10E8, 10E9, 10EA, and 10EB

Dimensions

Width: 179 mm (7.05 inches)

Height: 34.5 mm (1.36 inches)

Depth: 182 mm (7.17 inches)

Weight

Maximum configuration as shipped: 4.86 kg (10.71 lb) (with package)

Maximum configuration as shipped: 4.14 kg (9.13 lb) (without package)

Environment

- Air temperature:

  Operating: 10°C to 35°C (50°F to 95°F)

  Storage in original shipping package: -40°C to 60°C (-40°F to 140°F)

  Storage without package: -10°C to 60°C (14°F to 140°F)
- Humidity:

  Operating: 20% to 80% (non-condensing)

  Storage: 20% to 90% (non-condensing)
- Altitude:

  Operating: -15.2 to 3 048 m (-50 to 10 000 ft)

  Storage: -15.2 to 10 668 m (-50 to 35 000 ft)

Electrical input

The ac power adapter input voltage: 100 to 240 V ac

Input frequency range: 50 to 60 Hz

Lenovo programs

Your computer comes with Lenovo programs to help you work more easily and securely. Depending on the Microsoft® Windows® operating system preinstalled, the programs might vary.

Accessing a program on your computer

Note: For Windows 7, some of the Lenovo programs might be ready to be installed, so you need to install them manually. Then, you can access and use these programs. To install a program that is ready to be installed, open the Lenovo ThinkVantage® Tools program, and then view the program icons using Tiles. Follow the instructions under greyed-out icons to locate the icon for the desired program. Double-click the icon to install the program.

To access a program on your computer, do one of the following:

- For Windows 7 or Windows 10:
  - From Windows Search:
    1. Depending on your Windows version, do one of the following:
       - For Windows 7: Click the Start button to open the Start menu, and then type the program name into the search box.
       - For Windows 10: Type the program name into the search box next to the Start button.
    2. In the search results, click the name of the desired program to launch the program.

- From the Start menu or Control Panel:
  1. Click the Start button to open the Start menu. Then, click the name of the desired program to launch the program.
  2. If the program name is not displayed, click **All Programs** for Windows 7 or **All apps** for Windows 10 to display the program list. From the list or a folder in the list, click the name of the desired program to launch the program.
  3. If the program name is not displayed on the Start menu, access the program from Control Panel.
     a. Depending on your Windows version, do one of the following:
        - For Windows 7: Click **Control Panel** on the Start menu.
        - For Windows 10: Right-click the Start button to open the Start context menu, and then click **Control Panel**.
     b. View Control Panel using Large icons or Small icons, and then click the name of the desired program to launch the program.

- For Windows 8 or Windows 8.1:
  1. Press the Windows key to go to the Start screen. Click the name of the desired program to launch the program.
  2. If you cannot find the program you need, depending on your Windows version, do one of the following:
     - For Windows 8: Move the pointer to the bottom-right corner of the screen to display the charms. Then click the **Search** charm to search for the desired program.
     - For Windows 8.1: Click the arrow icon in the bottom-left corner of the screen to go to the Apps screen. Find the desired program in the apps list or search for it in the search box in the top-right corner of the screen.

An introduction to Lenovo programs

This section provides information about the major Lenovo programs available on your operating system.

Note: Depending on your computer model, some of the following programs might not be available.

- For Windows 7 only:
  - **Create Recovery Media**

    The Create Recovery Media program enables you to restore only the C drive or the entire storage drive to the factory-default settings.
  - **Lenovo PowerENGAGE**

    The Lenovo PowerENGAGE program enables you to register your computer with Lenovo.
  - **Message Center Plus**

    The Message Center Plus program automatically displays messages informing you about important notices from Lenovo, such as alerts on system updates and alerts on conditions that require your attention.
  - **Rescue and Recovery®**

    The Rescue and Recovery program is a one-button recovery and restore solution. It includes a set of self-recovery tools to help you diagnose computer problems, get help, and recover from system crashes, even if you cannot start the Windows operating system.
- For Windows 10 only:
  - **Lenovo ID**

    The Lenovo ID program enables you to create your Lenovo ID and access all supported Lenovo programs and web portals with single sign-on.

- For Windows 8 and Windows 8.1:
  - **Lenovo Support**

    The Lenovo Support program enables you to register your computer with Lenovo, check the computer health condition and battery status, download and view user manuals for your computer, get the warranty information of your computer, and explore help and support information.
- For Windows 7, Windows 8, and Windows 8.1:
  - **Fingerprint Manager Pro or ThinkVantage Fingerprint Software**

    The Fingerprint Manager Pro or ThinkVantage Fingerprint Software program enables you to use a fingerprint reader. The integrated fingerprint reader provided on some keyboards enables you to enroll your fingerprint and associate it with your power-on password, hard disk password, and Windows password. As a result, fingerprint authentication can replace passwords and enable simple and secure user access.
  - **Password Manager**

    The Password Manager program automatically captures and fills in authentication information for Windows programs and Web sites.
  - **System Update**

    The System Update program provides regular access to the system updates for your computer, such as device driver updates, software updates, and BIOS updates. The program gathers information from the Lenovo Help Center about new updates for your computer, then sorts and displays the updates for download and installation. You have complete control of which updates to download and install.
- For Windows 7, Windows 8.1, and Windows 10:
  - **Lenovo Bluetooth Lock**

    The Lenovo Bluetooth Lock program enables you to use a Bluetooth device (such as your smartphone) as a proximity-based unit for locking or unlocking your computer automatically. By detecting the distance between your computer and the predefined Bluetooth device that you are carrying, the Lenovo Bluetooth Lock program automatically locks your computer when you walk away and unlocks your computer when you come back. This is a simple way to protect your computer against unauthorized access in case that you forget to lock your computer.
  - **PC Cloud Manager**

    The PC Cloud Manager (PCM) program is a browser-based solution for client-computer management. The PCM program has two components: PCM Server and PCM Client. PCM Server is installed on the computer, where the administrator performs management work, such as power management and security management. PCM Client is installed on the client computers to be managed. The administrator can log in to PCM Server to manage computers with PCM Client installed, through the Internet Web browser.
- For Windows 8, Windows 8.1, and Windows 10:
  - **Lenovo Companion**

    Your computer's best features and capabilities should be easy to access and understand. With Lenovo Companion, they are. Use Lenovo Companion to do the following:

    - Optimize your computer's performance, monitor your computer's health, and manage updates.
    - Access your user guide, check warranty status, and view accessories customized for your computer.
    - Read how-to articles, explore Lenovo forums, and stay up-to-date on technology news with articles and blogs from trusted sources.

    Lenovo Companion is filled with exclusive Lenovo content to help you learn more about what you can do with your computer.
- For Windows 7, Windows 8, Windows 8.1, and Windows 10:

– **Lenovo Device Experience or Lenovo PC Experience**

  The Lenovo Device Experience or Lenovo PC Experience program helps you work more easily and securely. The program provides easy access to Lenovo ThinkVantage Tools or Lenovo Tools, important settings and information about your computer, the Lenovo Support Web site, and so on.

– **Lenovo Solution Center**

  The Lenovo Solution Center program enables you to troubleshoot and resolve computer problems. It combines diagnostic tests, system information collection, security status, and support information, along with hints and tips for maximum system performance.

– **Power Manager**

  The Power Manager program provides convenient, flexible, and complete power management for your computer. It enables you to adjust your computer power settings to achieve the best balance between performance and power saving.

– **REACHit or Lenovo Reach**

  The REACHit or Lenovo Reach program enhances your cloud experience. This program keeps you connected at all times and enables you to access all your favorite items from personal computers, smartphones, or tablets. As a result, you can access, edit, and share your files from anywhere. You also can add your favorite Web services to your cloud desktop and stay logged-in to Web sites with the cloud password manager.

– **SHAREit or Lenovo SHAREit**

  The SHAREit or Lenovo SHAREit program provides a quick and easy way to share files and folders among computers, smartphones, tablets, or smart TVs with the Android or the Windows operating system installed. SHAREit or Lenovo SHAREit uses any type of network or even no network at all to share files and folders.

Lenovo Support Web site

Technical support information is available on the Lenovo Support Web site at:
http://www.lenovo.com/support

This Web site is updated with the latest support information such as the following:

- Drivers and software
- Diagnostic solutions
- Product and service warranty
- Product and parts details
- User guides and manuals
- Knowledge base and frequently asked questions

Chapter 3. General checkout

Attention

The drives in the computer you are servicing might have been rearranged or the drive startup sequence changed. Be extremely careful during write operations such as copying, saving, or formatting. Data or programs can be overwritten if you select an incorrect drive.

General error messages appear if a problem or conflict is found by an application program, the operating system, or both. For an explanation of these messages, refer to the information supplied with that software package.

Before replacing any FRUs, ensure that the latest level of BIOS is installed on the system. A down-level BIOS might cause false errors and unnecessary replacement of the system board. For more information on how to determine and obtain the latest level BIOS, see “BIOS levels” on page 289.

Use the following procedure to help determine the cause of the problem:

1. Power-off the computer and all external devices.
2. Check all cables and power cords.
3. Set all display controls to the middle position.
4. Power-on all external devices.
5. Power-on the computer.
   - Look for displayed error codes
   - Listen for beep codes
   - Look for readable instructions or a main menu on the display.

   If you *did not* receive the correct response, proceed to step 6 on page 33.

   If you *do* receive the correct response, proceed to step 7 on page 33.
6. Look at the following conditions and follow the instructions:
   - If you hear beep codes during POST, go to “Beep symptoms” on page 61.
   - If the computer displays a POST error, go to “POST error codes” on page 62.
   - If the computer hangs and no error is displayed, continue at step 7 on page 33.
7. Run the Diagnostic programs. See “Diagnostics” on page 52.
   - If you receive an error, replace the part that the diagnostic program calls out.
   - If the test stops and you cannot continue, replace the last device tested.

Problem determination tips

Due to the variety of hardware and software combinations that can be encountered, use the following information to assist you in problem determination. If possible, have this information available when requesting assistance from Service Support and Engineering functions.

- Machine type and model
- Processor or hard disk drive upgrades
- Failure symptom
  - Do diagnostics indicate a failure?
  - What, when, where, single, or multiple systems?
  - Is the failure repeatable?

© Copyright Lenovo 2013, 2015

  - Has this configuration ever worked?
  - If it has been working, what changes were made prior to it failing?
  - Is this the original reported failure?
- Diagnostics version
  - Type and version level
- Hardware configuration
  - Print (print screen) configuration currently in use
  - BIOS level
- Operating system software
  - Type and version level

Notes: To eliminate confusion, identical systems are considered identical only if they:

1. Are the exact machine type and models
2. Have the same BIOS level
3. Have the same adapters/attachments in the same locations
4. Have the same address jumpers/terminators/cabling
5. Have the same software versions and levels
6. Have the same Diagnostic Diskettes (version)
7. Have the same configuration options set in the system
8. Have the same setup for the operating system control files

Comparing the configuration and software set-up between “working and non-working” systems will often lead to problem resolution.

Chapter 4. Troubleshooting and diagnostics

This chapter provides information about diagnosing and troubleshooting computer problems. If your computer problem is not described here, see “Lenovo Support Web site” on page 32 for additional troubleshooting resources.

Basic troubleshooting

The following table provides information to help you troubleshoot your computer problems.

Note: If you cannot correct the problem, have the computer serviced. For a list of service and support telephone numbers, refer to the *Safety, Warranty, and Setup Guide* that comes with your computer or go to the Lenovo Support Web site at http://www.lenovo.com/support/phone.

Symptom	Action
The computer does not start when you press the power switch.	Verify that: • The power cord is correctly connected to the rear of the computer and to a working electrical outlet. • If your computer has a secondary power switch on the rear of the computer, ensure that it is switched on. • The power indicator on the front of the computer is on. • The computer voltage matches the voltage available at the electrical outlet for your country or region.
The monitor screen is blank.	Verify that: • The monitor signal cable is correctly connected to the monitor and to the appropriate monitor connector on the computer. • The monitor power cord is correctly connected to the monitor and to a working electrical outlet. • The monitor is turned on and the brightness and contrast controls are set correctly. • The computer voltage matches the voltage available at the electrical outlet for your country or region. • If your computer has two monitor connectors, be sure to use the connector on the graphics card.
The keyboard does not work.	Verify that: • The computer is turned on. • The keyboard is securely connected to a USB connector on the computer. • No keys are stuck.
The mouse does not work.	Verify that: • The computer is turned on. • The mouse is securely connected to a USB connector on the computer. • The mouse is clean. Refer to “Optical mouse” on page 42 for further information.

© Copyright Lenovo 2013, 2015

Symptom	Action
The operating system does not start.	Verify that: • The startup sequence includes the device where the operating system resides. Usually, the operating system is on the hard disk drive. For more information, see “Selecting a startup device” on page 57.
The computer beeps multiple times before the operating system starts.	Verify that no keys are stuck.

Accessing Control Panel on the Windows 8 or Windows 8.1 operating system

On the Windows operating system, you can view and change computer settings through Control Panel. To access Control Panel on the Windows 8 or Windows 8.1 operating system, do one of the following:

- From the desktop
  1. Move the pointer to the top-right or bottom-right corner of the screen to display the charms.
  2. Click **Settings**.
  3. Click **Control Panel**.
- From the Start screen
  - For Windows 8:
    1. Move the pointer to the top-right or bottom-right corner of the screen to display the charms.
    2. Click **Search**.
    3. On the Apps screen, scroll to the right side, and click **Control Panel** in the **Windows System** section.
  - For Windows 8.1:
    1. Click the arrow icon in the bottom-left corner of the screen to go to the Apps screen.
    2. Scroll to the right side, and click **Control Panel** in the **Windows System** section.

Troubleshooting procedure

Use the following procedure as a starting point for diagnosing problems you are experiencing with your computer:

1. Verify that the cables for all attached devices are connected correctly and securely.
2. Verify that all attached devices that require ac power are connected to properly grounded, functioning electrical outlets.
3. Verify that all attached devices are enabled in the BIOS settings of your computer. For more information about accessing and changing the BIOS settings, refer to your Chapter 5 “Using the Setup Utility program” on page 55.
4. Go to the “Troubleshooting” on page 37 and follow the instructions for the type of problem you are experiencing. If the Troubleshooting information does not help you resolve a problem, continue with the next step.
5. Try using a previously captured configuration to see if a recent change to hardware or software settings has caused a problem. Before restoring a previous configuration, capture your current configuration in case the older configuration settings do not solve the problem or have adverse affects. To restore a captured configuration, do the following:
   a. Open Control Panel by doing one of the following:
      - For Windows 7: Click the Start button to open the Start menu, and then click **Control Panel**.

- For Windows 8 or Windows 8.1: See “Accessing Control Panel on the Windows 8 or Windows 8.1 operating system” on page 36.
- For Windows 10: Right-click the Start button to open the Start context menu, and then click **Control Panel**.

b. View Control Panel using Large icons or Small icons, and then click **Recovery → Open System Restore**.

c. Follow the instructions on the screen.

If this does not correct the problem, continue with the next step.

6. Run the diagnostic program. See “Lenovo Solution Center” on page 52 for more information.
   - If the diagnostic program detects a hardware failure, contact the Lenovo Customer Support Center. See “Lenovo Support Web site” on page 32 for more information.
   - If you are unable to run the diagnostic program, contact the Lenovo Customer Support Center. See “Lenovo Support Web site” on page 32 for more information.
   - If the diagnostic program does not detect a hardware failure, continue with the next step.
7. Use an antivirus program to see if your computer has been infected by a virus. If the program detects a virus, remove the virus.
8. If none of these actions solve the problem, seek technical assistance. See “Lenovo Support Web site” on page 32 for more information.

Troubleshooting

Use the troubleshooting information to find solutions to problems that have definite symptoms.

If the symptom your computer is experiencing occurred immediately after you installed a new hardware option or new software, do the following before referring to the troubleshooting information:

1. Remove the new hardware option or software. If you must remove the computer cover to remove a hardware option, ensure that you review and follow the electrical safety information provided with your computer. For your safety, do not operate the computer with the cover removed.
2. Run the diagnostic program to ensure that your computer is operating correctly.
3. Reinstall the new hardware option or software following the manufacturer's instructions.

Select the problem your computer is experiencing from the following list:

- “Audio problems” on page 38
- “CD problems” on page 39
- “DVD problems” on page 40
- “Intermittent problems” on page 41
- “Keyboard, mouse, or pointing device problems” on page 42
- “Monitor problems” on page 43
- “Networking problems” on page 45
- “Option problems” on page 47
- “Performance and lockup problems” on page 48
- “Printer problems” on page 49
- “Serial port problems” on page 50
- “Software problems” on page 50
- “USB problems” on page 51

Audio problems

Select your symptom from the following list:

- "No audio in Windows" on page 38
- "An audio disc or AutoPlay-enabled disc does not automatically play when it is inserted into a drive" on page 38
- "Sound comes from one external speaker only" on page 38
- "No audio in DOS applications or games" on page 39

No audio in Windows

Symptom: No audio in Windows

Actions:

- If you are using powered external speakers that have an On/Off control, verify that the On/Off control is set to the **On** position and the speaker power cable is connected to a properly grounded, functional ac electrical outlet.
- If your external speakers have a volume control, verify that the volume control is not set too low.
- Click the speaker icon in the Windows desktop notification area. A volume-control window opens. Press **Mixer** to open the Volume Mixer window. Verify that the speaker mute buttons are not pressed and the volume settings are not set too low.
- Some models have a front audio panel you can use to adjust volume. If you have a front audio panel, verify that the volume is not set too low.
- Verify that your external speakers (and headphones, if used) are connected to the correct audio connector on the computer. Most speaker cables are color-coded to match the connector.

Note: When external-speaker or headphone cables are attached to the audio connector, the internal speaker, if present, is disabled. In most cases, if an audio adapter is installed in one of the expansion slots, the audio function built into the system board is disabled; use the audio jacks on the adapter.

- Ensure that the program you are running is designed for use in the Windows operating system. If the program is designed to run in DOS, the program does not use the Windows sound feature and must be configured to use SoundBlaster Pro or SoundBlaster emulation.
- Verify that the audio device drivers are correctly installed. See Windows help system for more information.

If these actions do not correct the problem, run the Lenovo Solution Center program. If you need technical assistance, see "Lenovo Support Web site" on page 32.

An audio disc or AutoPlay-enabled disc does not automatically play when it is inserted into a drive

Symptom: An audio disc or AutoPlay-enabled disc does not automatically play when it is inserted into a drive

Action: See "CD problems" on page 39.

Sound comes from one external speaker only

Symptom: Sound comes from one external speaker only.

Actions:

- Ensure that the speaker cable is inserted completely into the connector on the computer.
- Ensure that the cable that attaches the left speaker to the right speaker is securely connected.

- Right-click the speaker icon in the Windows desktop notification area, and then click **Playback devices**. Click the **Playback** tab, select Speakers, and then click **Properties**. Click **Balance** on the **Levels** tab, and verify that the Balance setting is set correctly.

If these actions do not correct the problem, you might have a failing speaker. Have the speaker serviced. If you need technical assistance, see “Lenovo Support Web site” on page 32.

No audio in DOS applications or games

Symptom: No audio in DOS applications or games

Actions:

- Ensure that the DOS application or game is configured to use SoundBlaster Pro or SoundBlaster emulation. Refer to the documentation that comes with the application or game for instructions on setting sound-card settings.
- If these actions do not correct the problem, run the Lenovo Solution Center program. If you need technical assistance, see “Lenovo Support Web site” on page 32.

CD problems

Select your symptom from the following list:

- “A CD or DVD does not work” on page 39
- “Unable to use a startable (bootable) recovery medium, such as the Product Recovery CD, to start your computer” on page 39

A CD or DVD does not work

Symptom: A CD or DVD does not work.

Actions:

- If you have multiple CD or DVD drives installed (or a combination of CD and DVD drives), try inserting the disc into the other drive. In some cases, only one of the drives is connected to the audio subsystem.
- Verify that the disc is inserted correctly, with its label up.
- Ensure that the disc you are using is clean. To remove dust or fingerprints, wipe the disc clean with a soft cloth from the center to the outside. Wiping a disc in a circular motion might cause loss of data.
- Verify that the disc you are using is not scratched or damaged. Try inserting another disc that you know is good. If you cannot read from a known-good disc, you might have a problem with your CD or DVD drive or the cabling to your CD or DVD drive. Ensure that the power cable and signal cable are securely connected to the drive.

Unable to use a startable (bootable) recovery medium, such as the Product Recovery CD, to start your computer

Symptom: Unable to use a startable (bootable) recovery medium, such as the Product Recovery CD, to start your computer.

Action: Ensure that the CD or DVD drive is in the startup sequence before the hard disk drive. Refer to your “Selecting or changing the startup device sequence” on page 58 for information on viewing and changing the startup sequence. Note that on some models the startup sequence is permanently set and cannot be changed.

If these actions do not correct the problem, run the Lenovo Solution Center program. If you need technical assistance, see “Lenovo Support Web site” on page 32.

DVD problems

Select your symptom from the following list:

- “Black screen instead of DVD video” on page 40
- “DVD movie will not play” on page 40
- “No audio or intermittent audio while playing DVD movie” on page 40
- “Playback is very slow or choppy” on page 40
- “Invalid disc or no disc found message” on page 41

Black screen instead of DVD video

Symptom: Black screen instead of DVD video

Actions:

- Restart the DVD player program.
- Close any open files, turn off the computer, and then restart the computer.
- Try a lower screen resolution or color depth.

If these actions do not correct the problem, run the Lenovo Solution Center program. If you need technical assistance, see “Lenovo Support Web site” on page 32.

DVD movie will not play

Symptom: DVD movie will not play.

Actions:

- Ensure that the disc surface is clean and not scratched.
- Check the disc or package for regional coding. You might need to purchase a disc with coding for the region where you are using your computer.

If these actions do not correct the problem, run the Lenovo Solution Center program. If you need technical assistance, see “Lenovo Support Web site” on page 32.

No audio or intermittent audio while playing DVD movie

Symptom: No audio or intermittent audio while playing DVD movie.

Actions:

- Check the volume control settings on your computer and on your speakers.
- Ensure that the disc surface is clean and not scratched.
- Check all cable connections to and from the speakers.
- Use the DVD menu for the video to select a different audio track.

If these actions do not correct the problem, run the Lenovo Solution Center program. If you need technical assistance, see “Lenovo Support Web site” on page 32.

Playback is very slow or choppy

Symptom: Playback is very slow or choppy.

Actions:

- Disable any background programs, such as AntiVirus or Desktop Themes.

- Ensure that video resolution is set to less than 1152 x 864.

If these actions do not correct the problem, run the Lenovo Solution Center program. If you need technical assistance, see “Lenovo Support Web site” on page 32.

Invalid disc or no disc found message

Symptom: Invalid disc or no disc found message

Actions:

- Ensure that a DVD disc is in the drive with the shiny side of the disc facing down.
- Ensure that video resolution is set to less than 1152 x 864.
- On computers that have a CD-ROM or CD-RW drive in addition to a DVD-ROM drive, ensure that the DVD disc is in the drive labeled “DVD”.

If these actions do not correct the problem, run the Lenovo Solution Center program. If you need technical assistance, see “Lenovo Support Web site” on page 32.

Intermittent problems

Symptom: A problem occurs only occasionally and is difficult to repeat.

Actions:

- Verify that all cables and cords are securely connected to the computer and attached devices.
- Verify that when the computer is on, the fan grill is not blocked (there is air flow around the grill), and the fans are working. If airflow is blocked or the fans are not working, the computer might overheat.
- If SCSI devices are installed, verify that the last external device in each SCSI chain is terminated correctly. (See your SCSI documentation.)

If these actions do not correct the problem, run the Lenovo Solution Center program. If you need technical assistance, see “Lenovo Support Web site” on page 32.

Hard disk drive problems

Select your symptom from the following list:

- “Some or all hard disk drives missing from the Setup Utility program” on page 41
- “"No Operating System Found" message or the system not starting from the correct hard disk drive” on page 42

Some or all hard disk drives missing from the Setup Utility program

Symptom: Some or all hard disk drives missing from the Setup Utility program

Actions:

- Ensure that all hard disk drive signal cables and power cables are connected correctly.
- Ensure that your computer is configured correctly to support the hard disk drives.
  - If your computer is installed with five SATA hard disk drives, ensure that the SATA hard disk drive enablement module (one to five hard disk drives) is installed.
  - If your computer is installed with SAS hard disk drives, ensure that the SAS hard disk drive enablement module (one to five hard disk drives) or the LSI MegaRAID SAS adapter is installed.

If these actions do not correct the problem, run the diagnostic program Lenovo Solution Center. See “Lenovo Solution Center” on page 52. If you need technical assistance, see “Lenovo Support Web site” on page 32.

"No Operating System Found" message or the system not starting from the correct hard disk drive

Symptom: "No Operating System Found" message or the system not starting from the correct hard disk drive

Actions:

- Ensure that all hard disk drive signal cables and power cables are connected correctly. Refer to “Replacing the primary hard disk drive” on page 126.
- Ensure that the hard disk drive your computer starts from is listed as the first startup device in the Setup Utility program. Refer to “Selecting a startup device” on page 57.

Note: In rare cases, the hard disk drive with the operating system might get corrupted or damaged. In such cases, you might need to replace the hard disk drive. Refer to “Replacing the primary hard disk drive” on page 126.

If these actions do not correct the problem, run the diagnostic program Lenovo Solution Center. See “Lenovo Solution Center” on page 52. If you need technical assistance, see “Replacing the primary hard disk drive” on page 126.

Keyboard, mouse, or pointing device problems

Select your symptom from the following list:

- “The mouse or pointing device does not work” on page 42
- “The pointer on the screen does not move smoothly with the mouse” on page 43
- “The fingerprint reader does not work” on page 43
- “The wireless keyboard does not work” on page 43

The mouse or pointing device does not work

Symptom: The mouse or pointing device does not work.

Actions:

- Verify that the mouse or pointing-device cable is securely attached to the correct connector on the computer. Depending on the type of mouse you have, the mouse cable will connect to either the mouse, serial, or USB connector. Some keyboards have integrated USB connectors that can be used for a USB mouse or pointing device.
- Verify that the device drivers for the mouse or pointing device are installed correctly.
- If you are using a USB keyboard or mouse, verify that the USB connectors are enabled in the BIOS settings. See “Enabling or disabling a device” on page 57.

If these actions do not correct the problem, run the Lenovo Solution Center program. If you need technical assistance, see “Lenovo Support Web site” on page 32.

Optical mouse

This section provides instructions on how to clean an optical mouse.

An optical mouse uses a light-emitting diode (LED) and an optical sensor to navigate the pointer. If the pointer on the screen does not move smoothly with the optical mouse, you might need to clean the mouse.

To clean an optical mouse, do the following:

1. Turn off your computer.
2. Disconnect the mouse cable from the computer.
3. Turn the mouse upside down to check the lens.
   a. If there is a smudge on the lens, gently clean the area with a plain cotton-tipped swab.
   b. If there is debris in the lens, gently blow the debris away from the area.
4. Check the surface on which you are using the mouse. If you have a very intricate picture or pattern beneath the mouse, it may be difficult for the digital signal processor (DSP) to determine changes in the mouse position.
5. Reconnect the mouse cable to the computer.
6. Turn your computer back on.

The pointer on the screen does not move smoothly with the mouse

Symptom: The pointer on the screen does not move smoothly with the mouse.

Action: Erratic movement of the mouse pointer is generally caused by a buildup of dirt, oils, and other contaminants on the ball inside the mouse. Clean the mouse. See “Optical mouse” on page 42 for instructions.

The fingerprint reader does not work

Symptom: The fingerprint reader does not work.

Action: The following could cause the fingerprint reader not to operate properly:

- Not enrolling your fingerprint correctly.
- Scratching the surface of the reader with a hard, pointed object.
- Scraping the surface of the reader with your nail or anything hard.
- Using or touching the reader with a dirty finger.
- The surface of your finger is very different from when you enrolled your fingerprint.

The wireless keyboard does not work

Symptom: The wireless keyboard does not work.

Action: If the Transceiver Communications LED is on and the wireless Keyboard does not work, restart your computer. If restarting your computer does not solve the problem, verify that the following conditions are met:

- The batteries are properly installed.
- The batteries still retain their current.
- The wireless Keyboard is located less than ten meters away from the transceiver.
- The transceiver is fully installed.

Action: If the Transceiver Communications LED is not on, reconnect the transceiver and the keyboard.

Monitor problems

Note: Many monitors have status-indicator lights and built-in controls for adjusting brightness, contrast, width, height, and other picture adjustments. However, the controls vary from monitor type to monitor type. For information about the status lights and using the controls, refer to the documentation that comes with your monitor.

Select your symptom from the following list:

- "Wrong characters appear on the screen" on page 44
- "The monitor works when you turn on the computer, but goes blank after some period of computer inactivity" on page 44
- "The monitor works when you turn on the computer, but goes blank when you start some application programs" on page 44
- "The image appears to be flickering" on page 44
- "The image is discolored" on page 45

Wrong characters appear on the screen

Symptom: Wrong characters appear on the screen.

Action: Have the computer serviced. For details, see "Lenovo Support Web site" on page 32.

The monitor works when you turn on the computer, but goes blank after some period of computer inactivity

Symptom: The monitor works when you turn on the computer, but goes blank after some period of computer inactivity.

Action: The computer is probably set for energy savings with the power-management feature. If the power-management feature is enabled, disabling it or changing the settings might solve the problem.

If these actions do not correct the problem, run the Lenovo Solution Center program. If you need technical assistance, see "Lenovo Support Web site" on page 32.

The monitor works when you turn on the computer, but goes blank when you start some application programs

Symptom: The monitor works when you turn on the computer, but goes blank when you start some application programs.

Actions:

- Ensure that the monitor signal cable is securely connected to the monitor and the monitor connector on the computer. A loose cable can cause intermittent problems.
- Verify that the necessary device drivers for the application programs are installed. Refer to the documentation for the affected application program to see if device drivers are required.

If these actions do not correct the problem, run the Lenovo Solution Center program. If you need technical assistance, see "Lenovo Support Web site" on page 32.

The image appears to be flickering

Solutions:

- The screen might be affected by interference from nearby equipment. Magnetic fields around other devices, such as transformers, appliances, fluorescent lights, and other monitors might be causing the problem. Move fluorescent desk lighting or any equipment that produces magnetic fields farther away from the screen. If this does not correct the problem, turn off the computer. Then, adjust the placement of the computer and other devices so that they are at least 305 mm (12 inches) apart. Turn on the computer.
- Reset the refresh rate supported by your computer.
  1. Right-click a blank area on the desktop.
  2. Depending on your Windows version, do one of the following:
     - For Windows 7, Windows 8, or Windows 8.1: Click **Screen resolution → Advanced settings**.

– For Windows 10: Click **Display settings**. On the **Display** tab, click **Advanced display settings** → **Display adapter properties**.

3. Click the **Monitor** tab, and then reset the refresh rate to be the highest and noninterlaced.

The image is discolored

Symptom: The image is discolored.

Action: The monitor might be affected by interference from nearby equipment. Magnetic fields around other devices, such as transformers, appliances, fluorescent lights, and other monitors might be causing the problem. Move fluorescent desk lighting or any equipment that produces magnetic fields further away from the monitor. If this does not correct the problem, do the following:

1. Turn off the monitor. (Moving a color monitor while it is turned on might cause screen discoloration.)
2. Adjust the placement of the monitor and other devices so that they are at least 305 mm (12 inches) apart.
3. Turn on the monitor.

If these actions do not correct the problem, your monitor might need service. See “Lenovo Support Web site” on page 32 for details.

Networking problems

The following are the most common networking problems. Select your networking problem from the following list:

- “Ethernet problems” on page 45
- “A wireless LAN problem” on page 46
- “A wireless WAN problem” on page 47
- “Bluetooth problem” on page 47

Ethernet problems

For Ethernet problems, select your symptom from the following list:

- “Your computer cannot connect to the network” on page 45
- “The adapter stops working for no apparent reason” on page 46
- “If your computer is a Gigabit Ethernet model and you use a speed of 1000 Mbps, the connection fails or errors occur” on page 46
- “If your computer is a Gigabit Ethernet model, it cannot connect to the network at 1000 Mbps. Instead, it connects at 100 Mbps” on page 46

Your computer cannot connect to the network

Symptom: Your computer cannot connect to the network.

Actions: Ensure that:

- The cable is installed properly.

  The network cable must be securely connected to both the Ethernet connector of your computer and the RJ45 connector of the hub. The maximum allowable distance from the computer to hub is 100 meters. If the cable is connected and the distance is within acceptable limits but the problem persists, try a different cable.
- The cable is installed properly.
- You are using the correct device driver.
- The switch port and the adapter have the same duplex setting.

If you configured the adapter for full duplex, ensure that the switch port is also configured for full duplex. Setting the wrong duplex mode can degrade performance, cause data loss, or result in lost connections.

- You have installed all networking software that is necessary for your network environment.

  Check with your LAN administrator for the necessary networking software.

The adapter stops working for no apparent reason

Symptom: The adapter stops working for no apparent reason.

Action: The network driver files may be corrupt or missing. Update the driver by referring to the “Solution” description for the procedure to ensure that the correct device driver is installed.

The Wake on LAN feature is not working

Symptom: The Wake on LAN (WOL) feature is not working.

Actions:

- Ensure that WOL is enabled in the BIOS Setup Utility program.
- If it is, check with your LAN administrator for the necessary settings.

If your computer is a Gigabit Ethernet model and you use a speed of 1000 Mbps, the connection fails or errors occur

Symptom: If your computer is a Gigabit Ethernet model and you use a speed of 1000 Mbps, the connection fails or errors occur.

Actions:

- Use Category 5 wiring and ensure that the network cable is securely connected.
- Connect to a 1000 BASE-T hub/switch (not 1000 BASE-X).

If your computer is a Gigabit Ethernet model, it cannot connect to the network at 1000 Mbps. Instead, it connects at 100 Mbps

Symptom: If your computer is a Gigabit Ethernet model, it cannot connect to the network at 1000 Mbps. Instead, it connects at 100 Mbps.

Actions:

- Try another cable.
- Ensure that the link partner is set to auto-negotiate.
- Ensure that the switch is 802.3ab-compliant (gigabit over copper).

A wireless LAN problem

Symptom: You cannot connect using the built-in wireless networking card.

Actions:

- Ensure that your wireless LAN driver is the latest version. Check the Web site and verify the driver version supported by Access Connections is the latest documented in the readme file.
- Ensure that your computer is within range of a wireless access point.
- Ensure that the wireless radio is enabled by double-clicking the Access Connections icon in the Windows notification area.
- Check Network Name (SSID), and your encryption information. Use Access Connections to verify this case-sensitive information.

A wireless WAN problem

Message: Unauthorized WAN card is plugged in - Power off and remove the WAN card.

Action: The wide-area-network card (WAN card) is not supported on this computer. Remove it.

Note: Some computer models do not have a wireless WAN.

Bluetooth problem

Symptom: Sound does not come from the Bluetooth headset/headphone but comes from the local speaker even though the headset/headphone is connected using Headset profile or AV profile.

Action: Do the following:

1. Exit the application that uses the sound device (for example, Windows Media® Player).
2. Open Control Panel.
3. Click **Hardware and Sound → Sound**.
4. Select the **Playback** tab.
5. If you are using the Headset profile, select **Bluetooth Hands-free Audio** and click the **Set Default** button. If you are using the AV profile, select **Stereo Audio** and click the **Set Default** button.
6. Click **OK** to close the Sound window.

Note: Bluetooth is supported only on some computer models.

Option problems

Use this information to diagnose problems with Lenovo hardware options that do not have their own troubleshooting information.

Select your symptom from the following list:

- "An option that was just installed does not work" on page 47
- "An option that previously worked does not work now" on page 47

An option that was just installed does not work

Symptom: An option that was just installed does not work.

Action: Verify that:

- The option is designed for your computer.
- You followed the installation instructions supplied with the option and the installation instructions provided with your computer, and all option files (such as device drivers, if required) are installed correctly.
- You have not loosened other installed options or cables.
- If the option is an adapter, you have provided enough hardware resources for the adapter to function correctly. See the documentation supplied with the adapter (as well as the documentation for any other installed adapters) to determine the resources required for each adapter.

If these actions do not correct the problem, run the Lenovo Solution Center program. If you need technical assistance, see "Lenovo Support Web site" on page 32.

An option that previously worked does not work now

Symptom: An option that previously worked does not work now.

Actions:

- Verify that all option hardware and cable connections are secure.
- If the option comes with its own test instructions, use those instructions to test the option.
- If the failing option is a SCSI option, verify that:
  - The cables for all external SCSI options are connected correctly.
  - The last option in each SCSI chain, or the end of the SCSI cable, is terminated correctly.
  - All external SCSI options are turned on. External SCSI options must be turned on before the computer is turned on. For more information, see your SCSI documentation.
- Verify that the option and any required device drivers are installed correctly.

If these actions do not correct the problem, run the Lenovo Solution Center program. If you need technical assistance, see “Lenovo Support Web site” on page 32.

Performance and lockup problems

Poor performance and lockup problems can be a result of any of the following:

- “Insufficient free hard disk drive space” on page 48
- “Excessive number of fragmented files” on page 49

Make a selection from the above list to find out more about the corrective actions you can take.

Insufficient free hard disk drive space

Solutions: Free up hard disk drive space.

- Clean out your Inbox, Sent Items, and Deleted Items folders from your e-mail application.
- Clean up your C drive.
  1. Depending on your Windows version, do one of the following:
     - For Windows 7: Click the Start button to open the Start menu, and then click **Computer**.
     - For Windows 8: Open File Explorer, and then click **Computer**.
     - For Windows 8.1: Open File Explorer.
     - For Windows 10: Click the Start button to open the Start menu, and then click **File Explorer** → **This PC**.
  2. Right-click your C drive and then click **Properties**.
  3. Check the amount of free space, and then click **Disk Cleanup**.
  4. A list of unnecessary file categories is displayed. Select each file category you want to delete, and then click **OK**.
- Turn some Windows features off or remove some unnecessary programs.
  1. Open Control Panel by doing one of the following:
     - For Windows 7: Click the Start button to open the Start menu, and then click **Control Panel**.
     - For Windows 8 or Windows 8.1: See “Accessing Control Panel on the Windows 8 or Windows 8.1 operating system” on page 36.
     - For Windows 10: Right-click the Start button to open the Start context menu, and then click **Control Panel**.
  2. View Control Panel using Large icons or Small icons, and then click **Programs and Features**.
  3. Do one of the following:
     - To turn some Windows features off, click **Turn Windows features on or off**. Follow the instructions on the screen.

– To remove some unnecessary programs, select the program you want to remove, and then click **Uninstall/Change** or **Uninstall**.

Excessive number of fragmented files

Solution: Use the Windows disk defragmentation or disk optimization feature to clean up the files.

Note: Depending on the volume of the storage drives and amount of data stored on the storage drives, the disk-defragmentation process might take up to several hours.

1. Close any open programs and windows.
2. Depending on your Windows version, do one of the following:
   - For Windows 7: Click the Start button to open the Start menu, and then click **Computer**.
   - For Windows 8: Open File Explorer, and then click **Computer**.
   - For Windows 8.1: Open File Explorer.
   - For Windows 10: Click the Start button to open the Start menu, and then click **File Explorer** → **This PC**.
3. Right-click your C drive and then click **Properties**.
4. Click the **Tools** tab.
5. Depending on your Windows version, do one of the following:
   - For Windows 7: Click **Defragment now**.
   - For Windows 8, Windows 8.1, or Windows 10: Click **Optimize**. Select the desired drive, and then click **Optimize**.
6. Follow the instructions on the screen.

Insufficient memory

Symptom: Insufficient memory

In general, the more memory that is installed, the better the Windows operating system runs.

Action: Install additional memory. For information about purchasing memory, see “Lenovo Support Web site” on page 32. For step-by-step instructions on installing memory, see “Installing or replacing a memory module” on page 98.

If these actions do not correct the problem, run the diagnostic programs (see “Lenovo Solution Center” on page 52 for instructions). If you need technical assistance, see “Lenovo Support Web site” on page 32.

Printer problems

Symptom: The printer does not work.

Actions: Verify that:

1. The printer is turned on and is online.
2. Paper is loaded correctly.
3. The printer signal cable is securely connected to the correct parallel, serial, or USB connector on the computer.

Note: Non-IEEE-approved printer signal cables might cause unpredictable problems.

1. Any device drivers and other software that came with the printer are correctly installed.
2. You have assigned the printer port correctly in your operating system, application program, or BIOS settings. For more information about BIOS settings, see Chapter 5 “Using the Setup Utility program” on page 55.

If the problem persists, run the tests described in the documentation that comes with your printer. If you cannot correct the problem, have the computer serviced. See “Lenovo Support Web site” on page 32.

Serial port problems

Use this information to troubleshoot the serial port and devices attached to the serial port.

Symptom: Serial port cannot be accessed.

Actions:

- Ensure that the serial cable is securely connected to the serial port on the computer and to the serial device. If the serial device has its own power cord, ensure that it is attached to a properly grounded electrical outlet.
- If the serial device has its own On/Off switch, ensure that it is in the On position.
- If the serial device has an Online switch, ensure that it is in the Online position.
- If the serial device is a printer, ensure that paper is loaded correctly.
- Verify that any software supplied with the serial device is correctly installed. Refer to the documentation for the serial-device option.
- Ensure that the serial-port adapter, if you added one, is properly installed and firmly seated.

If these actions do not correct the problem, run the Lenovo Solution Center program. If you need technical assistance, see “Lenovo Support Web site” on page 32.

Software problems

Select your symptom from the following list:

- “When using a sort feature, dates do not sort in the correct order” on page 50
- “Software does not work as expected” on page 50

When using a sort feature, dates do not sort in the correct order

Symptom: When using a sort feature, dates do not sort in the correct order.

Action: Some software developed before the year 2000 used only the last two digits of a year to sort dates, always assuming the first two digits were 19. Consequently, these programs sort dates out of order. Check with your software manufacturer to see if any updates are available. Many software manufacturers make updates available from the World Wide Web.

Software does not work as expected

Symptom: Software does not work as expected.

Actions:

- Most software programs have built-in help systems that provide instructions for most tasks. If you are having difficulty performing a specific task within a software program, refer to the help system for that program. Help systems are typically accessible from a menu or button in the program, and frequently from the F1 key.
- If you have difficulty with the Windows operating system or one of its components, refer to the Windows help system.
- To determine if problems are caused by newly installed software, verify that:

  - Your computer has the minimum memory requirements needed to use the software. See the information supplied with the software to verify memory requirements. (If you just installed an adapter or memory, you might have a memory-address conflict.)
  - The software is designed to operate on your computer.
  - Other software works on your computer.
  - The software you are using works correctly on another computer.
- If you received any error messages while using the software program, see the printed documentation supplied with the software or the help system for that software for a description of the messages and solutions to the problem.
- Check with your software manufacturer to see if any updates are available. Many software manufacturers make updates available from the World Wide Web.
- If the software program used to work correctly, but does not work correctly now, do the following:
  1. Open Control Panel by doing one of the following:
     - For Windows 7: Click the Start button to open the Start menu, and then click **Control Panel**.
     - For Windows 8 or Windows 8.1: See “Accessing Control Panel on the Windows 8 or Windows 8.1 operating system” on page 36.
     - For Windows 10: Right-click the Start button to open the Start context menu, and then click **Control Panel**.
  2. View Control Panel using Large icons or Small icons, and then click **Recovery → Open System Restore**.
  3. Follow the instructions on the screen.
- If you are unable to resolve the problem through other methods, uninstall the software program and reinstall it.

If these actions do not correct the problem, you might need technical assistance. Contact your software manufacturer or see “Lenovo Support Web site” on page 32 for details.

USB problems

Symptom: The USB connectors cannot be accessed.

Actions:

- Ensure that the USB cable is securely connected to the USB connector and to the USB device. If the USB device has its own power cord, ensure that it is attached to a properly grounded electrical outlet.
- If the USB device has its own On/Off switch, ensure that it is in the On position.
- If the USB device has an Online switch, ensure that it is in the Online position.
- If the USB device is a printer, ensure that paper is loaded correctly.
- Ensure that any device drivers or other software supplied with the USB device is correctly installed. Refer to the documentation for the USB device.
- Reset the device by detaching and reattaching the USB connector.

If these actions do not correct the problem, run the Lenovo Solution Center program to test the USB connector. If the USB device came with its own diagnostics, run those diagnostics against the USB device. If you need technical assistance, see “Lenovo Support Web site” on page 32.

Diagnostics

The diagnostic program is used to test hardware components of your computer. The diagnostic program can also report operating-system-controlled settings that interfere with the correct operation of your computer. You can use the preinstalled diagnostic program to diagnose computer problems, if your computer is running the Windows operating system.

Notes:

1. Your computer is preinstalled with the Lenovo Solution Center program for diagnostic purposes. For more information about the Lenovo Solution Center program, see “Lenovo Solution Center” on page 52.
2. If you are unable to isolate and repair the problem yourself after running the diagnostic program, save and print the log files created by the diagnostic program. You will need the log files when you speak to a Lenovo technical support representative.

Lenovo Solution Center

The Lenovo Solution Center program enables you to troubleshoot and resolve computer problems. It combines diagnostic tests, system information collection, security status, and support information, along with hints and tips for maximum system performance.

Notes:

- The Lenovo Solution Center program can be downloaded from http://www.lenovo.com/diags.
- If you are using a Windows operating system other than Windows 7, Windows 8, Windows 8.1, or Windows 10, go to http://www.lenovo.com/diags for the latest information on diagnostics for your computer.

To run the Lenovo Solution Center program, see “Lenovo programs” on page 29.

For additional information, refer to the Lenovo Solution Center help system.

Note: If you are unable to isolate and repair the problem yourself after running the program, save and print the log files. You will need the log files when you speak to a Lenovo technical support representative.

UEFI diagnostic program

A UEFI diagnostic program is preinstalled on the computer. It enables you to test memory modules and internal storage devices, view system information, and check and recover bad sectors on internal storage devices.

To run the UEFI diagnostic program, do the following:

1. Turn on the computer. If the computer cannot be turned on, go to “Basic troubleshooting” on page 35. If an error code is displayed, go to Chapter 6 “Symptom-to-FRU Index” on page 61 for error code descriptions and troubleshooting hints.
2. Repeatedly press and release the F10 key when turning on the computer. The main screen of the UEFI diagnostic program is displayed.
3. Follow the instructions on the screen to use the diagnostic program.

The options on the main screen are as follows:

Table 1. Items on the main screen of the UEFI diagnostic program

DIAGNOSTICS	TOOLS
• LCD test • Memory - Quick test • Memory - Extended test • Motherboard test • PCI-e test • Storage - Quick test	• System information • Recover bad sectors tool • Generate configuration file • Execute from configuration file • Exit application

Chapter 5. Using the Setup Utility program

The Setup Utility program is used to view and change the configuration settings of your computer, regardless of which operating system you are using. However, the operating system settings might override any similar settings in the Setup Utility program.

Starting the Setup Utility program

To start the Setup Utility program, do the following:

1. Ensure that your computer is turned off.
2. Repeatedly press and release the F1 key when turning on the computer. When you hear multiple beeps or see a logo screen, release the F1 key.

   Note: If a Power-On Password or an Administrator Password has been set, the Setup Utility program menu will not be displayed until you type the correct password. For more information, see “Using passwords” on page 55.

When the POST detects that the hard disk drive has been removed from your computer or the memory module size has decreased, an error message will be displayed when you start the computer and you will be prompted to do one of the following:

- Press F1 to enter the Setup Utility program.

  Note: After you enter the Setup Utility program, press F10 to save changes and exit the Setup Utility program. Press Enter when prompted to confirm the exit. The error message will not be displayed again.
- Press F2 to bypass the error message and log in to the operating system.

Note: You have to enable the configuration change detection feature for the POST to detect the removal of the hard disk drive. To enable the configuration change detection feature, do the following:

1. Start the Setup Utility program.
2. From the Setup Utility program main menu, select **Security → Configuration Change Detection**, and press Enter.
3. Select **Enabled** and press Enter.
4. Press F10 to save changes and exit the Setup Utility program. Press Enter when prompted to confirm the exit.

Viewing and changing settings

The Setup Utility program menu lists various items about the system configuration. To view or change settings, start the Setup Utility program. See “Starting the Setup Utility program” on page 55. Then, follow the instructions on the screen.

You can use either the keyboard or the mouse to navigate through BIOS menu choices. The keys used to perform various tasks are displayed at the bottom of each screen.

Using passwords

By using the Setup Utility program, you can set passwords to prevent unauthorized access to your computer and data. The following types of passwords are available:

- Power-On Password

© Copyright Lenovo 2013, 2015

- Administrator Password
- Hard Disk Password

You do not have to set any passwords to use your computer. However, using passwords improves computing security. If you decide to set any passwords, read the following sections.

Password considerations

A password can be any combination of up to 64 alphabetic and numeric characters. For security reasons, it is recommended to use a strong password that cannot be easily compromised. To set a strong password, use the following guidelines:

- Have at least eight characters in length
- Contain at least one alphabetic character and one numeric character
- Setup Utility program and hard disk passwords are not case sensitive
- Not be your name or your user name
- Not be a common word or a common name
- Be significantly different from your previous passwords

Power-on password

When a power-on password is set, you are prompted to type a valid password each time the computer is turned on. The computer cannot be used until the valid password is typed in.

Administrator password

Setting an administrator password deters unauthorized users from changing configuration settings. If you are responsible for maintaining the configuration settings of several computers, you might want to set an Administrator Password.

When an administrator password is set, you are prompted to type a valid password each time you try to access the Setup Utility program. The Setup Utility program cannot be accessed until a valid password is typed in.

If both the power-on password and administrator password are set, you can type either password. However, you must use your administrator password to change any configuration settings.

Setting, changing, and deleting a password

To set, change, or delete a password, do the following:

1. Start the Setup Utility program. See “Starting the Setup Utility program” on page 55.
2. From the Setup Utility program main menu, select **Security**.
3. Depending on the password type, select **Set Power-On Password**, **Set Administrator Password**, or **Hard Disk Password**.
4. Follow the instructions on the right side of the screen to set, change, or delete a password.

   Note: A password can be any combination of up to 64 alphabetic and numeric characters. For more information, see “Password considerations” on page 56.

Erasing lost or forgotten passwords (clearing CMOS)

This section provides instructions on how to erase lost or forgotten passwords, such as a user password.

To erase a lost or forgotten password, do the following:

1. Remove all media from the drives and turn off all attached devices and the computer. Then, disconnect all power cords from electrical outlets and disconnect all cables that are connected to the computer.
2. Remove the computer cover.
3. Locate the Clear CMOS /Recovery jumper on the system board.
4. Move the jumper from the standard position (pin 1 and pin 2) to the maintenance position (pin 2 and pin 3).
5. Reinstall the computer cover and connect the power cord.
6. Turn on the computer and leave it on for approximately 10 seconds. Then, turn off the computer by holding the power switch for approximately five seconds.
7. Repeat step 1 through step 2.
8. Move the Clear CMOS /Recovery jumper back to the standard position (pin 1 and pin 2).
9. Reinstall the computer cover and connect the power cord.

Enabling or disabling a device

This section provides information on how to enable or disable user access to the following devices:

USB Setup	Use this option to enable or disable a USB connector. When a USB connector is disabled, the device connected to the USB connector cannot be used.
SATA Controller	When this feature is set to **Disable**, all devices connected to the SATA connectors (such as hard disk drives or the optical drive) are disabled and cannot be accessed.

To enable or disable a device, do the following:

1. Start the Setup Utility program. See “Starting the Setup Utility program” on page 55.
2. From the Setup Utility program main menu, select **Devices**.
3. Depending on the device you want to enable or disable, do one of the following:
   - Select **USB Setup** to enable or disable a USB device.
   - Select **ATA Drive Setup** to enable or disable a SATA device.
4. Select the desired settings and press Enter.
5. Press F10 to save changes and exit the Setup Utility program. See “Exiting the Setup Utility program” on page 60.

Selecting a startup device

If your computer does not start up from a device such as the disc or hard disk drive as expected, do one of the following to select the startup device you want.

Selecting a temporary startup device

Use this procedure to select a temporary startup device.

Note: Not all discs and hard disk drives are bootable.

1. Turn off your computer.
2. Repeatedly press and release the F12 key when turning on the computer. When the Please select boot device window displays, release the F12 key.
3. Select the desired startup device and press Enter. The computer will start up from the device you selected.

Note: Selecting a startup device from the Please select boot device window does not permanently change the startup sequence.

Selecting or changing the startup device sequence

To view or permanently change the configured startup device sequence, do the following:

1. Start the Setup Utility program. See “Starting the Setup Utility program” on page 55.
2. From the Setup Utility program main menu, select **Startup**.
3. Select the devices for the Primary Startup Sequence, the Automatic Startup Sequence, and the Error Startup Sequence. Read the information displayed on the right side of the screen.
4. Press F10 to save changes and exit the Setup Utility program. See “Exiting the Setup Utility program” on page 60.

Enabling ErP LPS compliance mode

Lenovo computers meet the eco-design requirements of the ErP Lot 3 regulation. For more information, go to:
http://www.lenovo.com/ecodeclaration

You can enable the energy-related products directive (ErP) lowest power state (LPS) compliance mode in the Setup Utility program to reduce the consumption of electricity when your computer is in sleep or off mode.

To enable ErP LPS compliance mode in the Setup Utility program, do the following:

1. Start the Setup Utility program. See “Starting the Setup Utility program” on page 55.
2. From the Setup Utility program main menu, select **Power → Enhanced Power Saving Mode**, and press Enter.
3. Select **Enabled** and press Enter.
4. From the **Power** menu, select **Automatic Power On** and press Enter.
5. Select **Wake on Lan** and press Enter.
6. Select **Disabled** and press Enter.
7. Press F10 to save changes and exit the Setup Utility program. Press Enter when prompted to confirm the exit.

Note: When ErP LPS compliance mode is enabled, you can wake up your computer by doing one of the following:

- Pressing the power switch
- Enabling the wake up on alarm feature

  The wake up on alarm feature enables your computer to wake up at a set time. To enable the wake up on alarm feature, do the following:

  1. Start the Setup Utility program.
  2. From the Setup Utility program main menu, select **Power → Automatic Power On**, and press Enter.
  3. Select **Wake Up on Alarm** and press Enter. Then follow the instructions on the screen.
  4. Press F10 to save changes and exit the Setup Utility program. Press Enter when prompted to confirm the exit.
- Enabling the after power loss feature

  The after power loss feature enables your computer to wake up when the power supply resumes after a sudden loss of electricity. To enable the after power loss feature, do the following:

  1. Start the Setup Utility program.

2. From the Setup Utility program main menu, select **Power → After Power Loss**, and press Enter.
3. Select **Power On** and press Enter.
4. Press F10 to save changes and exit the Setup Utility program. Press Enter when prompted to confirm the exit.

ICE performance mode

You can adjust the acoustic and thermal performance of your computer through the **ICE Performance Mode** menu. Two choices are available:

- **Better Acoustic Performance** (default setting)
- **Better Thermal Performance**

By enabling **Better Acoustic Performance**, your computer will run with less noise at a normal thermal level. By enabling **Better Thermal Performance**, your computer will run at a better thermal level with normal acoustic performance.

To configure the ICE performance mode, do the following:

1. Start the Setup Utility program. See “Starting the Setup Utility program” on page 55.
2. From the Setup Utility program main menu, select **Power**.
3. Select **Intelligent Cooling Engine (ICE)**. The Intelligent Cooling Engine (ICE) window is displayed.
4. Select **ICE Performance Mode**. The ICE Performance Mode window is displayed.
5. Select **Better Acoustic Performance** or **Better Thermal Performance** as desired.
6. Press F10 to save changes and exit the Setup Utility program. See “Exiting the Setup Utility program” on page 60.

ICE thermal alert

You can monitor the thermal function of your computer under critical thermal situations through the **ICE Thermal Alert** menu. Two choices are available:

- **Enabled** (default setting)
- **Disabled**

After enabling the ICE thermal alert function, when critical thermal situations occur, such as malfunctioning fans, abnormally high temperature, and poor cooling performances, an alert log will be written into the Windows system log. The alert log can help you identify the thermal problems.

To configure the ICE thermal alert function, do the following:

1. Start the Setup Utility program. See “Starting the Setup Utility program” on page 55.
2. From the Setup Utility program main menu, select **Power**.
3. Select **Intelligent Cooling Engine (ICE)**. The Intelligent Cooling Engine (ICE) window is displayed.
4. Select **ICE Thermal Alert**. The ICE Thermal Alert window is displayed.
5. Select **Enabled** or **Disabled** as desired.
6. Press F10 to save changes and exit the Setup Utility program. See “Exiting the Setup Utility program” on page 60.

Changing the BIOS settings before installing a new operating system

BIOS settings vary by operating system. Change the BIOS settings before installing a new operating system.

To change the BIOS settings, do the following:

1. Start the Setup Utility program. See “Starting the Setup Utility program” on page 55.
2. From the Setup Utility program main menu, select **Exit → OS Optimized Default**.
3. Depending on the operating system to be installed, do one of the following:
   - To install the Windows 8 (64-bit) or Windows 8.1 (64-bit) operating system, select **Enabled**.
   - To install an operating system other than Windows 8 (64-bit) or Windows 8.1 (64-bit), select **Disabled**.
4. Select **Yes** in the window displayed and press Enter to confirm your selection.
5. Press F10 to save changes and exit the Setup Utility program. See “Exiting the Setup Utility program” on page 60.

Exiting the Setup Utility program

After you finish viewing or changing settings, press Esc to return to the Setup Utility program main menu. You might have to press Esc several times. Do one of the following:

- If you want to save the new settings, press F10 to save changes and exit the Setup Utility program.
- If you do not want to save the settings, select **Exit → Discard Changes and Exit**, and then press Enter. When the Reset Without Saving window shows, select **Yes**, and then press Enter to exit the Setup Utility program.
- If you want to return to the default settings, press F9 to load the default settings, and then press F10 to save and exit the Setup Utility program.

Chapter 6. Symptom-to-FRU Index

The Symptom-to-FRU index lists error symptoms and possible causes. The most likely cause is listed first. Always begin with Chapter 3 “General checkout” on page 33. This index can also be used to help you decide which FRUs to have available when servicing a computer. If you are unable to correct the problem using this index, go to “Undetermined problems” on page 64.

Notes:

- If you have both an error message and an incorrect audio response, diagnose the error message first.
- If you cannot run the diagnostic tests or you get a diagnostic error code when running a test, but did receive a POST error message, diagnose the POST error message first.
- If you did not receive any error message, look for a description of your error symptoms in the first part of this index.

Hard disk drive boot error

A hard disk drive boot error can have the following causes.

Error	FRU/Action
The start-up drive is not in the boot sequence in configuration.	Check the configuration and ensure the start-up drive is in the boot sequence.
No operating system installed on the boot drive.	Install an operating system on the boot drive.
The boot sector on the startup drive is corrupted.	The drive must be formatted. Do the following: 1. Attempt to back up the data on the failing hard disk drive. 2. Using the operating system programs, format the hard disk drive.
The drive is defective.	Replace the hard disk drive.

Power supply problems

If you suspect a power problem, use the following procedures.

Check/Verify	FRU/Action
Check the following for proper installation. • Power cord • On/Off switch connector • On/Off switch power supply connector • System board power supply connectors • Microprocessor(s) connection	Reseat connectors
Check the power cord for continuity.	Power cord
Check the power-on switch for continuity.	Power-on switch

Beep symptoms

Beep symptoms are tones or a series of tones separated by pauses (intervals without sound) during POST.

© Copyright Lenovo 2013, 2015

The following table describes the beep symptoms.

Beep symptom	FRU/Action
2 short beeps Common POST Error	Common error code, see the detail failure information in “POST error codes” on page 62.
3 short and 1 long beeps DRAM memory error	Perform the following actions in order. 1. Make sure the memory module(s) are properly seated in the connector(s). 2. Replace the memory module(s). 3. Replace the system board.

POST error codes

Each time you power-on the system, it performs a series of tests that check the operation of the system and some options. This series of tests is called the *Power-On Self-Test*, or *POST*. POST does the following operations.

- Checks some basic system-board operations
- Checks the memory operation
- Starts the video operation
- Verifies that the boot drive is working

If the POST detects a problem, an error message appears on the screen. A single problem can cause several error messages to appear. When you correct the cause of the first error message, the other error messages probably will not appear on the screen the next time you turn on the system.

Error code	POST error message	Description/Action
0135	Fan failure	The system might be overheating. Press F10 to exit. **Note:** If the problem is caused by the microprocessor fan, press F10 will not solve the problem.
0211	Keyboard not found	When there is no keyboard detected, the error message will be displayed.
0164	Memory size decreased	Press F10 to exit.
1762	Configuration change has occurred	This error message is displayed when a hard disk drive or optical drive change has been made. Press F10 to exit.
1820	More than one external fingerprint reader are attached. Power off and remove all but the reader that you set up within your main operating system.	If more than one external fingerprint reader are connected to a computer, this error message will be displayed to inform you to remove all of the fingerprint keyboards except the one compatible with the fingerprint application on your computer.
1962	No operating system found. Boot sequence will automatically repeat.	This error occurs only after the POST is completed. Boot sequence will automatically repeat.

Miscellaneous error conditions

Message/Symptom	FRU/Action
Changing display colors	**Display/Monitor**
Computer will *not* power-off. See “Hard disk drive boot error” on page 61.	1. Power Switch 2. System Board 3. Riser card, if installed.
Computer will *not* RPL from server	1. Ensure that network is in startup sequence as first device or first device after diskette. 2. Ensure that network adapter is enabled for RPL. 3. Network adapter (Advise network administrator of new MAC address)
Computer will *not* perform a Wake On LAN® (if applicable)	1. Check power supply and signal cable connections to network adapter. 2. Ensure that the operating system settings are set to enable Wake on LAN. 3. Ensure Wake On LAN feature is enabled in Setup/Configuration (see “Starting the Setup Utility program” on page 55) 4. Ensure network administrator is using correct MAC address. 5. Ensure no interrupt or I/O address conflicts. 6. Network adapter (advise network administrator of new MAC address)
Dead computer. See “Hard disk drive boot error” on page 61.	1. Power Supply 2. System Board
Diskette drive in-use light remains on or does not light when drive is active.	1. Diskette Drive 2. System Board 3. Diskette Drive Cable
Blank screen except for flashing cursor.	1. System Board 2. Primary Hard Disk Drive 3. Hard Disk Drive Cable
Incorrect memory size during POST	1. Run the Memory tests. 2. Memory Module 3. System Board
"Insert a Diskette" icon appears with a known-good diagnostics diskette in the first 3.5-inch diskette drive.	1. System Board 2. Diskette Drive Cable 3. Network Adapter
Intensity or color varies from left to right of characters and color bars	1. Display 2. Video adapter (if present) 3. System Board
No power or fan not running	1. See “Hard disk drive boot error” on page 61.

Message/Symptom	FRU/Action
Non-system disk or disk error-type message with a known-good diagnostic diskette.	1. Diskette Drive 2. System Board 3. Diskette Drive Cable
Other display symptoms not listed above (including blank or illegible display)	1. Display 2. System Board
Power-on indicator or hard disk drive in-use light not on, but computer works correctly	1. Power switch/LED assembly 2. System Board
Printer problems	1. Printer 2. System Board
Program loads from the hard disk with a known-good diagnostics diskette in the first 3.5-inch diskette drive	1. Run the Setup Utility program and check Startup sequence. 2. Diskette Drive 3. Diskette Drive Cable 4. System Board 5. Power Supply
RPL computer cannot access programs from its own hard disk.	1. If network administrator is using LCCM Hybrid RPL, check startup sequence: a. **First device - network** b. **Second device - hard disk** 2. Hard disk drive
RPL computer does not RPL from server	1. Check startup sequence. 2. Check the network adapter LED status.
Serial or parallel port device failure (system board port)	1. External Device Self-Test OK? 2. External Device 3. Cable 4. System Board
Serial or parallel port device failure (adapter port)	1. External Device Self-Test OK? 2. External Device 3. Cable 4. Alternate Adapter 5. System Board
Some or all keys on the keyboard do not work	1. Keyboard 2. Keyboard Cable 3. System Board

Undetermined problems

This section provides instructions on how to find out the failing devices or adapters.

1. Power-off the computer.
2. Remove or disconnect the following components (if installed) one at a time.
   a. External devices (modem, printer, or mouse)
   b. Any adapters
   c. Memory modules

d. Extended video memory
e. External Cache
f. External Cache RAM
g. Hard disk drive
h. Diskette drive

3. Power-on the computer to re-test the system.
4. Repeat steps 1 through 3 until you find the failing device or adapter.

If all devices and adapters have been removed, and the problem continues, replace the system board.

Chapter 7. Locations

This chapter introduces the locations of the computer hardware components.

For machine types: 10A0, 10A1, 10A6, 10A7, 10AG, 10AK, 10AL, and 10BE

Locating connectors, controls, and indicators on the front of your computer

Figure 1 “Front connector, control, and indicator locations” on page 67 shows the locations of the connectors, controls, and indicators on the front of your computer.

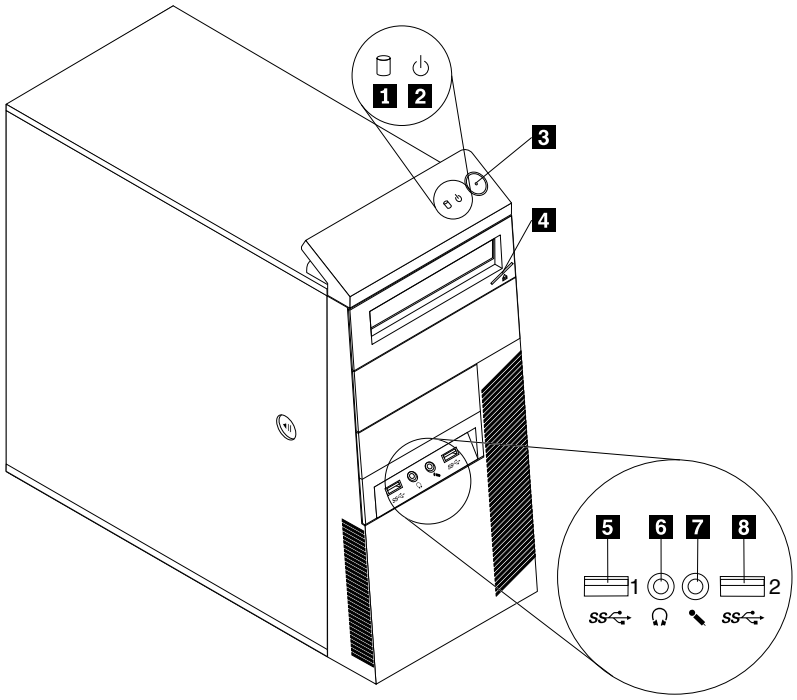

Figure 1. Front connector, control, and indicator locations

1 Hard disk drive activity indicator	5 USB 3.0 connector (USB port 1)
2 Power indicator	6 Headphone connector
3 Power button	7 Microphone connector
4 Optical drive eject/close button	8 USB 3.0 connector (USB port 2)

Locating connectors on the rear of your computer

- Figure 2 “ThinkCentre M93/p rear connector locations” on page 68 shows the locations of the connectors on the rear of ThinkCentre M93/p computer. Some connectors on the rear of your computer are color-coded to help you determine where to connect the cables on your computer.

© Copyright Lenovo 2013, 2015

- Figure 3 “ThinkCentre M83 rear connector locations” on page 69 shows the locations of the connectors on the rear of ThinkCentre M83 computer. Some connectors on the rear of your computer are color-coded to help you determine where to connect the cables on your computer.

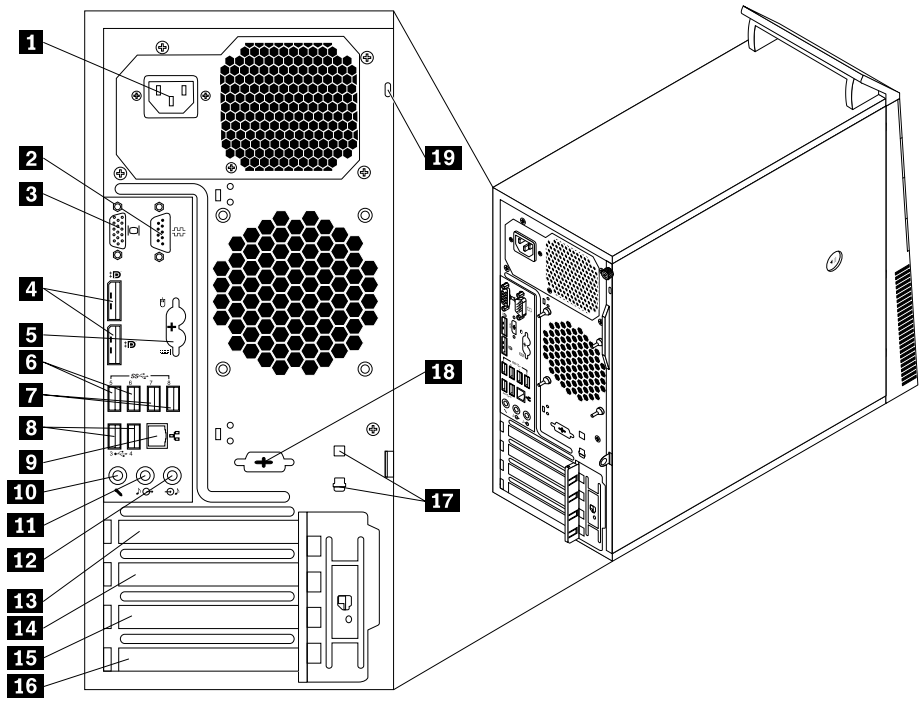

Figure 2. ThinkCentre M93/p rear connector locations

1 Power cord connector	11 Audio line-out connector
2 Serial port 1	12 Audio line-in connector
3 VGA monitor connector	13 PCI Express x16 graphics card slot
4 DisplayPort® connectors (2)	14 PCI Express x1 card slot
5 PS/2 keyboard and mouse connectors (optional)	15 PCI Express card slot (physical link width x16; negotiable link width x4, x1)
6 USB 3.0 connectors (USB ports 5 and 6)	16 PCI card slot
7 USB 3.0 connectors (USB ports 7 and 8)	17 Cable-lock slots (2)
8 USB 2.0 connectors (USB ports 3 and 4)	18 Optional serial port (serial port 2)
9 Ethernet connector	19 Security-lock slot
10 Microphone connector	

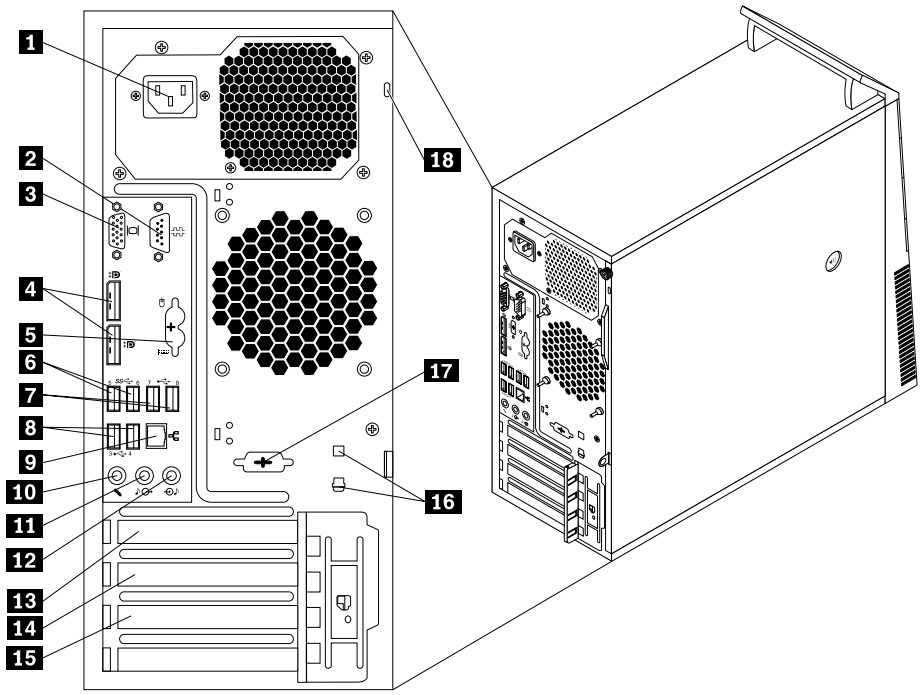

Figure 3. ThinkCentre M83 rear connector locations

1 Power cord connector	10 Microphone connector
2 Serial port 1	11 Audio line-out connector
3 VGA monitor connector	12 Audio line-in connector
4 DisplayPort connectors (2)	13 PCI Express x16 graphics card slot
5 PS/2 keyboard and mouse connectors (optional)	14 PCI Express x1 card slot
6 USB 3.0 connectors (USB ports 5 and 6)	15 PCI Express card slot (physical link width x16; negotiable link width x4, x1)
7 USB 2.0 connectors (USB ports 7 and 8)	16 Cable-lock slots (2)
8 USB 2.0 connectors (USB ports 3 and 4)	17 Optional serial port (serial port 2)
9 Ethernet connector	18 Security-lock slot

Connector	Description
Audio line-in connector	Used to receive audio signals from an external audio device, such as a stereo system. When you attach an external audio device, a cable is connected between the audio line-out connector of the device and the audio line-in connector of the computer.
Audio line-out connector	Used to send audio signals from the computer to external devices, such as powered stereo speakers (speakers with built-in amplifiers), headphones, multimedia keyboards, or the audio line-in connector on a stereo system or other external recording device.
DisplayPort connector	Used to attach a high-performance monitor, a direct-drive monitor, or other devices that use a DisplayPort connector.

Connector	Description
Ethernet connector	Used to attach an Ethernet cable for a local area network (LAN). **Note:** To operate the computer within FCC Class B limits, use a Category 5 Ethernet cable.
Microphone connector	Used to attach a microphone to your computer when you want to record sound or if you use speech-recognition software.
PS/2 keyboard connector (optional)	Used to attach a keyboard that uses a PS/2 keyboard connector.
PS/2 mouse connector (optional)	Used to attach a mouse, a trackball, or other pointing devices that use a PS/2 mouse connector.
Serial port	Used to attach an external modem, a serial printer, or other devices that use a 9-pin serial port.
USB connector	Used to attach a device that requires a USB connector, such as a USB keyboard, a USB mouse, a USB scanner, or a USB printer. If you have more than eight USB devices, you can purchase a USB hub, which you can use to connect additional USB devices.
VGA monitor connector	Used to attach a VGA monitor or other devices that use a VGA monitor connector.

Locating major FRUs and CRUs

Figure 4 “Component locations” on page 71 shows the locations of the various components in your computer. To remove the computer cover, see “Removing the computer cover” on page 93.

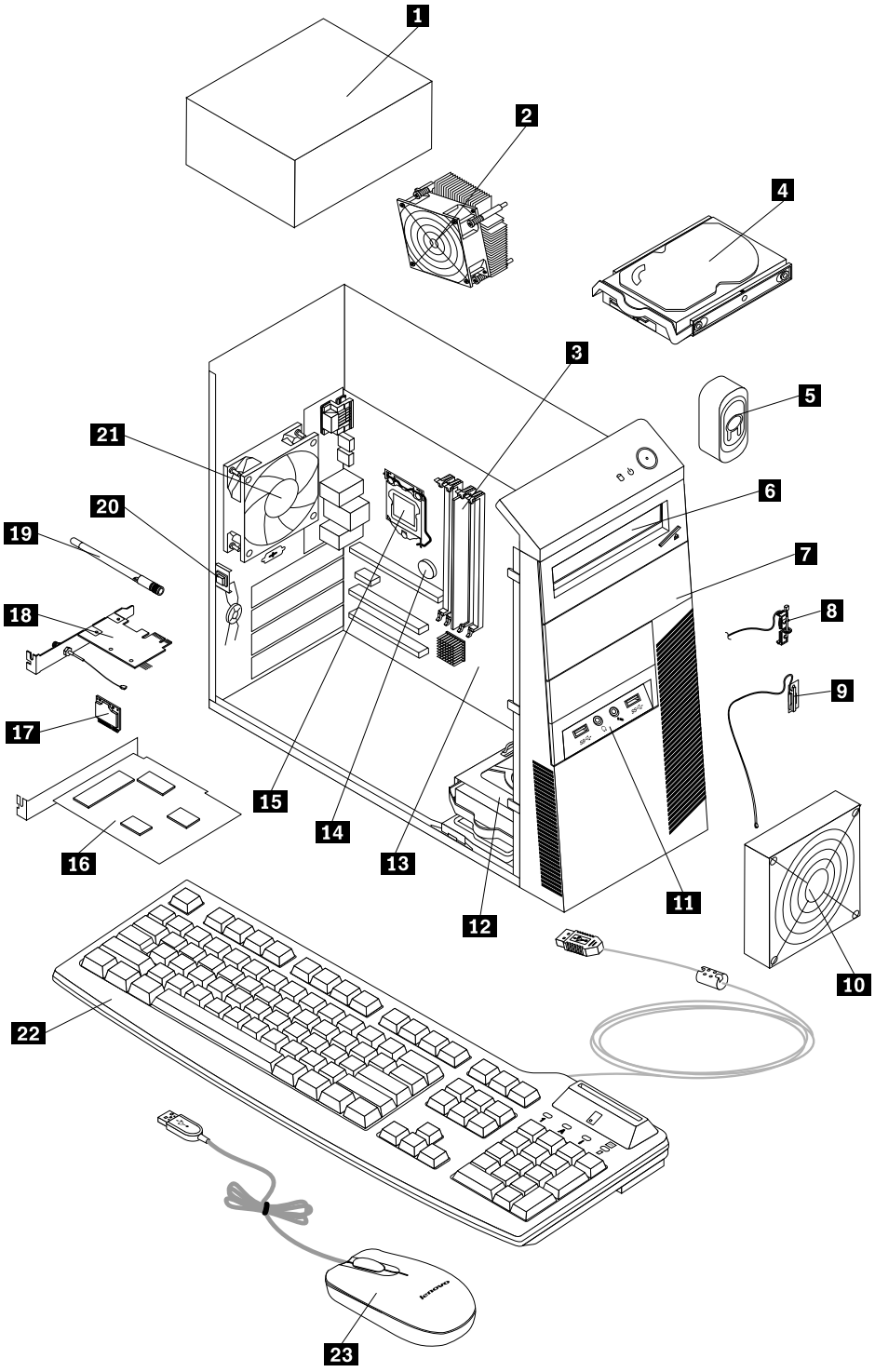

Figure 4. Component locations

The following table lists the major FRUs shown in Figure 4 “Component locations” on page 71 and identifies which FRUs also are self-service CRUs or optional-service CRUs.

Notes:

- Self-service CRUs: These CRUs unplug or are secured by no more than two screws. Examples of these types of CRUs include the keyboard, the mouse, any USB device, and the power cord. Other self-service CRUs depending on product design might include memory modules, adapter cards, hard disk drives, and optical drives.
- Optional-service CRUs: These CRUs are isolated parts within the computer and are concealed by an access panel that is typically secured by more than two screws. Once the access panel is removed, the specific CRU is visible.

Number	FRU description	Self-service CRU	Optional-service CRU
1	Power supply assembly	No	Yes
2	Heat sink and fan assembly	No	Yes
3	Memory modules	Yes	No
4	Primary hard disk drive	Yes	No
5	Internal speaker (available in some models)	Yes	No
6	Optical drive	Yes	No
7	Front USB assembly (available in some models)	No	Yes
8	Thermal sensor	No	Yes
9	Front Wi-Fi antenna	Yes	No
10	Front fan assembly	No	Yes
11	Front audio and USB assembly	No	Yes
12	Secondary hard disk drive (available in some models)	Yes	No
13	System board	No	No
14	Battery	No	No
15	Microprocessor	No	Yes
16	Peripheral Component Interconnect (PCI) card (available in ThinkCentre® M93/p computers)	Yes	No
17	Wi-Fi units	Yes	No
18	Wi-Fi antenna adapter	Yes	No
19	Rear Wi-Fi antenna	Yes	No
20	Cover presence switch (intrusion switch) (available in some models)	Yes	No
21	Rear fan assembly	No	Yes
22	Keyboard	Yes	No
23	Mouse	Yes	No

Looking up FRU information

For detailed FRU information, such as the FRU part numbers and supported computer models, go to: http:/www.lenovo.com/serviceparts-lookup

Locating parts on the system board

Note: Your computer comes with one of the following system boards.

Figure 5 “ThinkCentre M93/p system board part locations” on page 73 shows the locations of the parts on one type of system board.

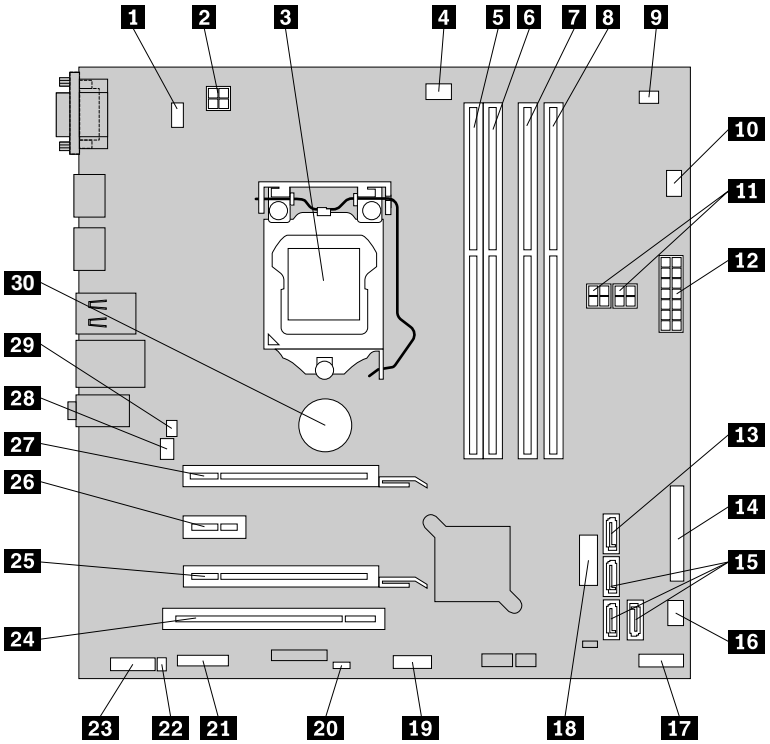

Figure 5. ThinkCentre M93/p system board part locations

1 PS/2 keyboard and mouse connector	16 Power fan connector
2 4-pin power connector	17 Front panel connector
3 Microprocessor	18 Front USB connector 2 (for connecting USB ports 1 and 2 on the front bezel)
4 Microprocessor fan connector	19 Front USB connector 1 (for connecting additional USB devices)
5 Memory slot 1 (DIMM1)	20 Clear CMOS (Complementary Metal Oxide Semiconductor) /Recovery jumper
6 Memory slot 2 (DIMM2)	21 Serial (COM2) connector
7 Memory slot 3 (DIMM3)	22 Internal speaker connector
8 Memory slot 4 (DIMM4)	23 Front audio connector
9 Thermal sensor connector	24 PCI card slot
10 Hard disk drive fan connector	25 PCI Express card slot (physical link width x16; negotiable link width x4, x1)
11 4-pin power connectors (2)	26 PCI Express x1 card slot
12 14-pin power connector	27 PCI Express x16 graphics card slot
13 eSATA connector	28 System fan connector

14 Parallel connector	29 Cover presence switch connector (intrusion switch connector)
15 SATA 3.0 connectors (3)	30 Battery

Figure 6 “ThinkCentre M83 system board part locations” on page 74 shows the locations of the parts on the other type of system board.

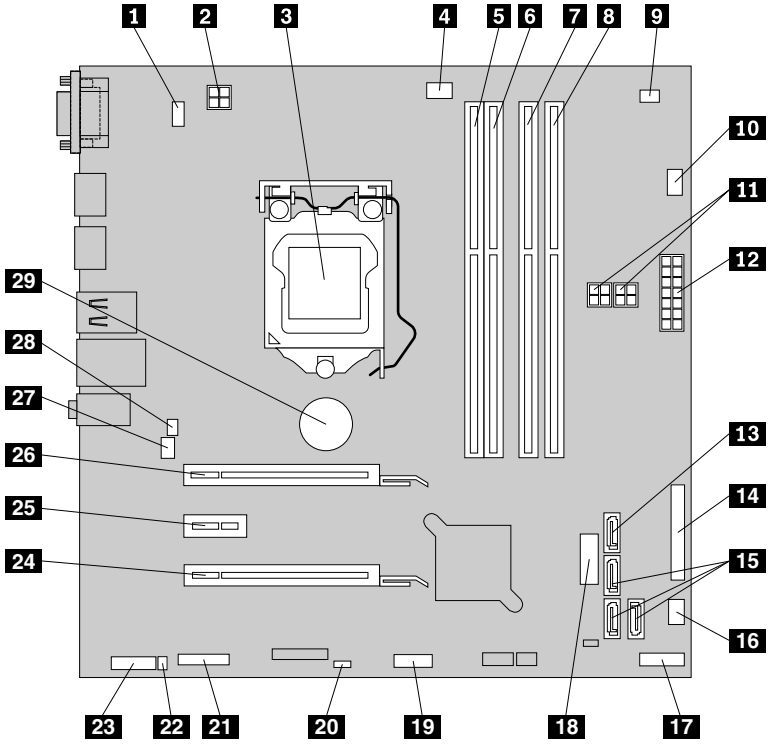

Figure 6. ThinkCentre M83 system board part locations

1 PS/2 keyboard and mouse connector	16 Power fan connector
2 4-pin power connector	17 Front panel connector
3 Microprocessor	18 Front USB connector 2 (for connecting USB ports 1 and 2 on the front bezel)
4 Microprocessor fan connector	19 Front USB connector 1 (for connecting additional USB devices)
5 Memory slot 1 (DIMM1)	20 Clear CMOS (Complementary Metal Oxide Semiconductor) /Recovery jumper
6 Memory slot 2 (DIMM2)	21 Serial (COM2) connector
7 Memory slot 3 (DIMM3)	22 Internal speaker connector
8 Memory slot 4 (DIMM4)	23 Front audio connector
9 Thermal sensor connector	24 PCI Express card slot (physical link width x16; negotiable link width x4, x1)
10 Hard disk drive fan connector	25 PCI Express x1 card slot
11 4-pin power connectors (2)	26 PCI Express x16 graphics card slot
12 14-pin power connector	27 System fan connector

13 eSATA connector	**28** Cover presence switch connector (intrusion switch connector)
14 Parallel connector	**29** Battery
15 SATA 3.0 connectors (3)	

Locating internal drives

Internal drives are devices that your computer uses to read and store data. You can add drives to your computer to increase storage capacity and enable your computer to read other types of media. Internal drives are installed in bays. In this manual, the bays are referred to as bay 1, bay 2, and so on. Your computer comes with the following factory-installed drives:

- An optical drive in bay 1
- A 3.5-inch hard disk drive or a 2.5-inch solid state disk in bay 3

When installing or replacing an internal drive, it is important to note the type and size of the drive that you can install or replace in each bay and correctly connect the cables to the drive installed. Refer to the appropriate section in Chapter 8 “Replacing FRUs (machine types: 10A0, 10A1, 10A6, 10A7, 10AG, 10AK, 10AL, and 10BE)” on page 93 for instructions on how to install or replace internal drives for your computer.

Figure 7 “Drive bay locations” on page 76 shows the locations of the drive bays.

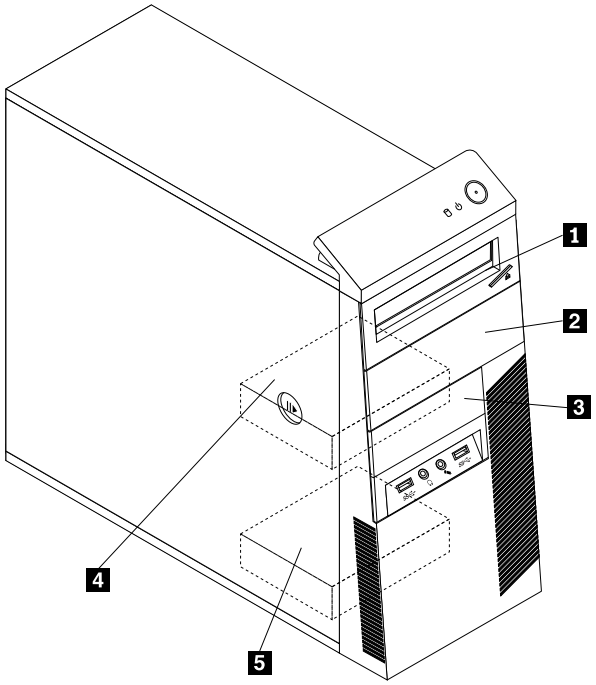

Figure 7. Drive bay locations

1 Bay 1 - Primary optical drive bay (with an optical drive available in some models)

2 Bay 2 - Secondary optical drive bay

3 Bay 3 - Card reader drive bay or mSATA solid-state drive bay

4 Bay 4 - Primary SATA hard disk drive bay (for installing a 3.5-inch SATA hard disk drive or a 2.5-inch SATA solid-state drive)

5 Bay 5 - Secondary SATA hard disk drive bay (for installing a 3.5-inch SATA hard disk drive or a 2.5-inch SATA solid-state drive)

For machine types: 10A2, 10A3, 10A8, 10A9, 10AH, 10AJ, 10AM, and 10AN

Locating connectors, controls, and indicators on the front of your computer

Figure 8 “Front connector, controls, and indicator locations” on page 77 shows the locations of the connectors, controls, and indicators on the front of your computer.

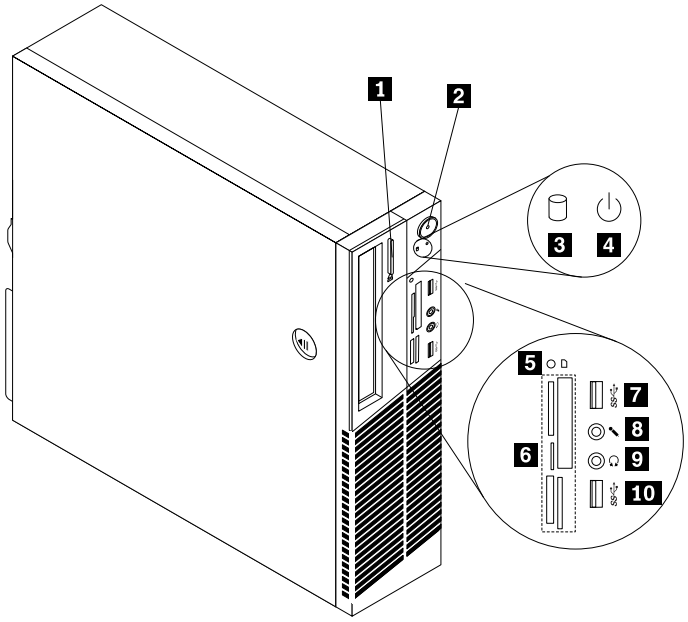

Figure 8. Front connector, controls, and indicator locations

1 Optical drive eject/close button	6 Card reader slots (available in some models)
2 power button	7 USB 3.0 connector (USB port 2)
3 Hard disk drive activity indicator	8 Microphone connector
4 Power indicator	9 Headphone connector
5 Card reader indicator (available in some models)	10 USB 3.0 connector (USB port 1)

Locating connectors on the rear of your computer

- Figure 9 “ThinkCentre M93/p rear connector locations” on page 78 shows the locations of the connectors on the rear of the ThinkCentre M93/p computer. Some connectors on the rear of your computer are color-coded to help you determine where to connect the cables on your computer.
- Figure 10 “ThinkCentre M83 rear connector locations” on page 79 shows the locations of the connectors on the rear of the ThinkCentre M83 computer. Some connectors on the rear of your computer are color-coded to help you determine where to connect the cables on your computer.

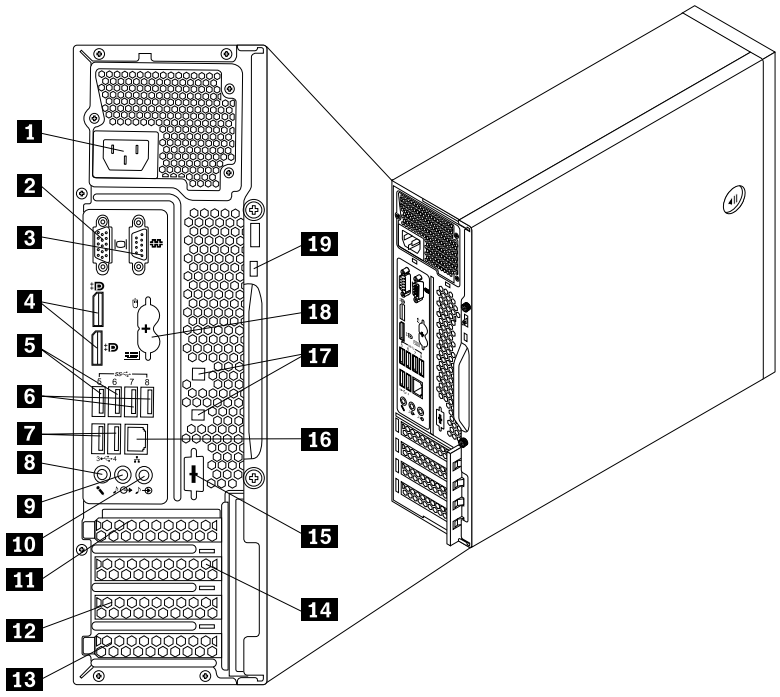

Figure 9. ThinkCentre M93/p rear connector locations

1 Power cord connector	11 PCI Express x16 graphics card slot
2 VGA monitor connector	12 PCI Express card slot (physical link width x16; negotiable link width x4, x1)
3 Serial port 1	13 PCI card slot
4 DisplayPort connectors (2)	14 PCI Express x1 card slot
5 USB 3.0 connectors (USB ports 5 and 6)	15 Optional serial port (serial port 2)
6 USB 3.0 connectors (USB ports 7 and 8)	16 Ethernet connector
7 USB 2.0 connectors (USB ports 3 and 4)	17 Cable-lock slots (2)
8 Microphone connector	18 PS/2 keyboard and mouse connectors (optional)
9 Audio line-out connector	19 Security-lock slot
10 Audio line-in connector	

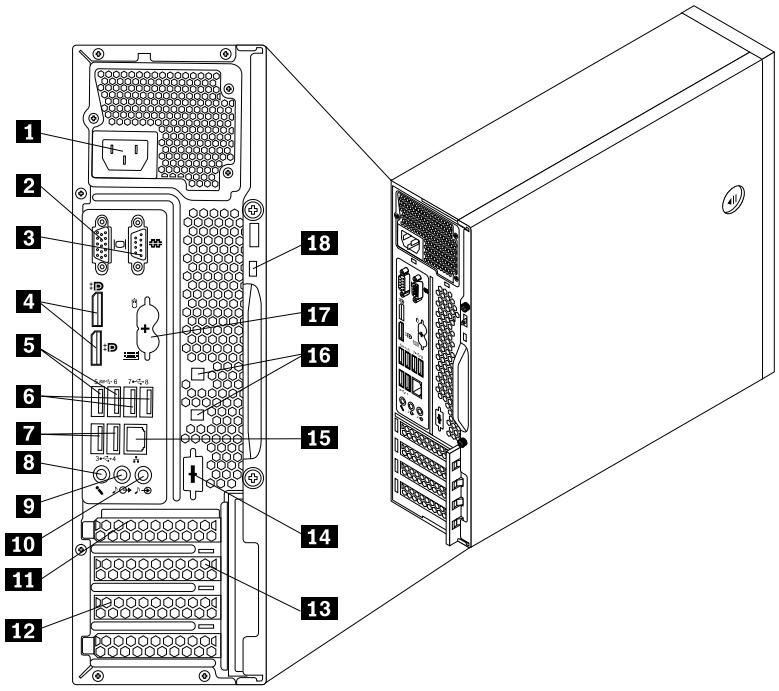

Figure 10. ThinkCentre M83 rear connector locations

1 Power cord connector	10 Audio line-in connector
2 VGA monitor connector	11 PCI Express x16 graphics card slot
3 Serial port 1	12 PCI Express card slot (physical link width x16; negotiable link width x4, x1)
4 DisplayPort connectors (2)	13 PCI Express x1 card slot
5 USB 3.0 connectors (USB ports 5 and 6)	14 Optional serial port (serial port 2)
6 USB 2.0 connectors (USB ports 7 and 8)	15 Ethernet connector
7 USB 2.0 connectors (USB ports 3 and 4)	16 Cable-lock slots (2)
8 Microphone connector	17 PS/2 keyboard and mouse connectors (optional)
9 Audio line-out connector	18 Security-lock slot

Connector	Description
Audio line-in connector	Used to receive audio signals from an external audio device, such as a stereo system. When you attach an external audio device, a cable is connected between the audio line-out connector of the device and the audio line-in connector of the computer.
Audio line-out connector	Used to send audio signals from the computer to external devices, such as powered stereo speakers (speakers with built-in amplifiers), headphones, multimedia keyboards, or the audio line-in connector on a stereo system or other external recording device.
DisplayPort connector	Used to attach a high-performance monitor, a direct-drive monitor, or other devices that use a DisplayPort connector.
Ethernet connector	Used to attach an Ethernet cable for a local area network (LAN). **Note:** To operate the computer within FCC Class B limits, use a Category 5 Ethernet cable.

Connector	Description
Microphone connector	Used to attach a microphone to your computer when you want to record sound or if you use speech-recognition software.
PS/2 keyboard connector (optional)	Used to attach a keyboard that uses a PS/2 keyboard connector.
PS/2 mouse connector (optional)	Used to attach a mouse, a trackball, or other pointing devices that use a PS/2 mouse connector.
Serial port	Used to attach an external modem, a serial printer, or other devices that use a 9-pin serial port.
USB connector	Used to attach a device that requires a USB connector, such as a USB keyboard, a USB mouse, a USB scanner, or a USB printer. If you have more than eight USB devices, you can purchase a USB hub, which you can use to connect additional USB devices.
VGA monitor connector	Used to attach a VGA monitor or other devices that use a VGA monitor connector.

Locating major FRUs and CRUs

Figure 11 “Component locations” on page 81 shows the locations of the various components in your computer. To remove the computer cover, see “Removing the computer cover” on page 159.

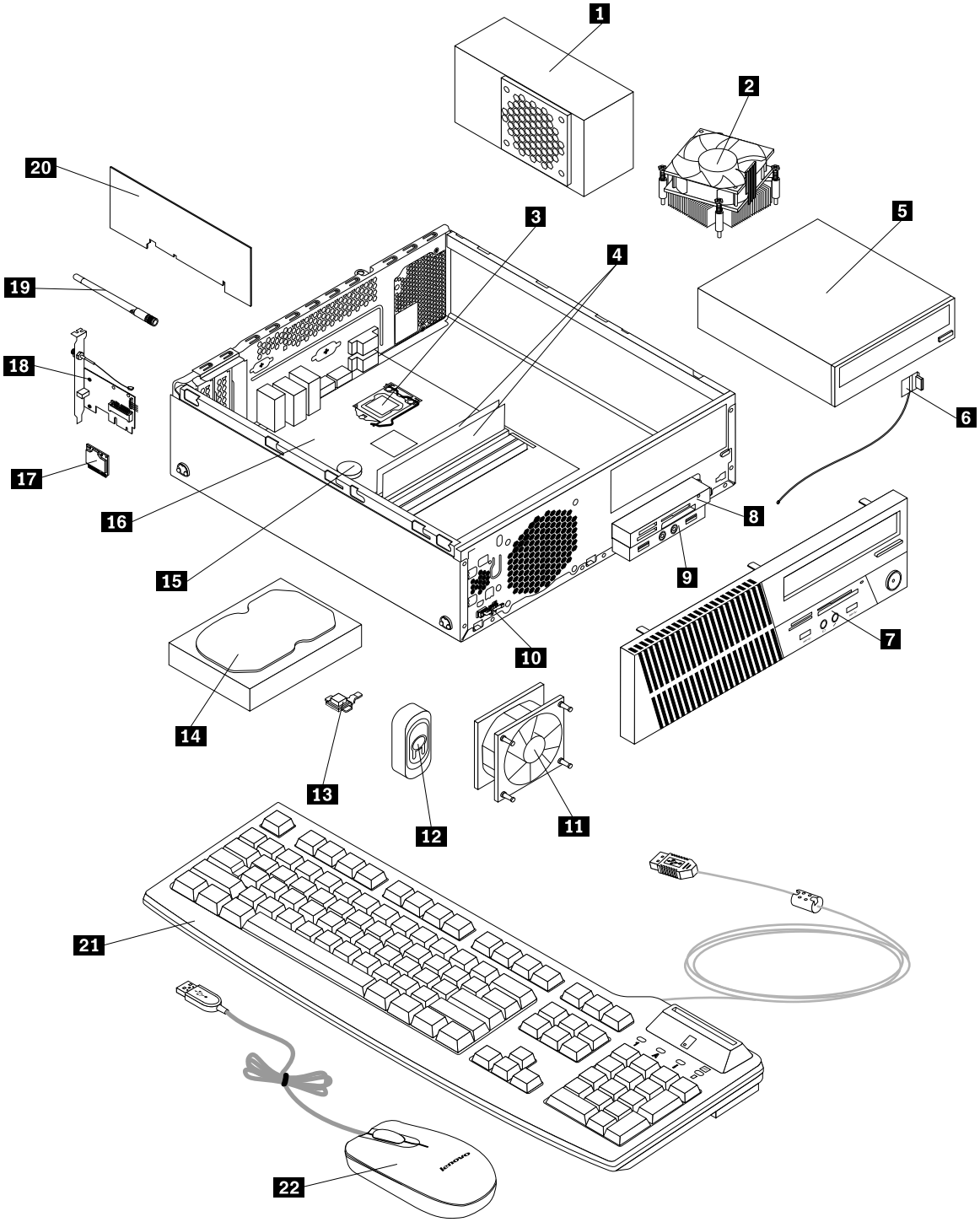

Figure 11. Component locations

The following table lists the major FRUs shown in Figure 11 “Component locations” on page 81 and identifies which FRUs also are self-service CRUs or optional-service CRUs.

Notes:

- Self-service CRUs: These CRUs unplug or are secured by no more than two screws. Examples of these types of CRUs include the keyboard, the mouse, any USB device, and the power cord. Other self-service CRUs depending on product design might include memory modules, adapter cards, hard disk drives, and optical drives.
- Optional-service CRUs: These CRUs are isolated parts within the computer and are concealed by an access panel that is typically secured by more than two screws. Once the access panel is removed, the specific CRU is visible.

Number	FRU description	Self-service CRU	Optional-service CRU
1	Power supply assembly	No	Yes
2	Heat sink and fan assembly	No	Yes
3	Microprocessor	No	Yes
4	Memory modules	Yes	No
5	Optical drive	Yes	No
6	Front Wi-Fi antenna	Yes	No
7	Front bezel	Yes	No
8	Card reader assembly (available in some models)	No	Yes
9	Front audio and USB assembly	No	Yes
10	Thermal sensor	No	Yes
11	System fan assembly	No	Yes
12	Internal speaker (available in some models)	No	Yes
13	Cover presence switch (available in some models)	Yes	No
14	Hard disk drive or solid-state drive	Yes	No
15	Battery	No	Yes
16	System board	No	Yes
17	Wi-Fi unit	Yes	Yes
18	Wi-Fi antenna adapter	Yes	Yes
19	Rear Wi-Fi antenna	Yes	No
20	PCI card (available in ThinkCentre® M93/p computers)	Yes	No
21	Keyboard	Yes	No
22	Mouse	Yes	No

Looking up FRU information

For detailed FRU information, such as the FRU part numbers and supported computer models, go to: http:/www.lenovo.com/serviceparts-lookup

Locating parts on the system board

Note: Your computer comes with one of the following system boards.

Figure 12 “ThinkCentre M93/p system board part locations” on page 83 shows the locations of the parts on one type of system board.

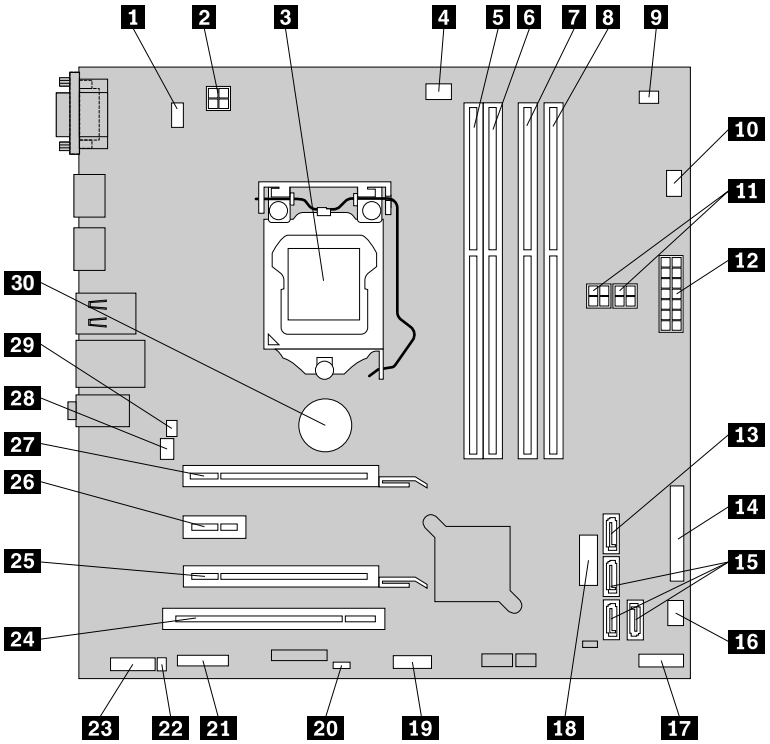

Figure 12. ThinkCentre M93/p system board part locations

1 PS/2 keyboard and mouse connector	16 Power fan connector
2 4-pin power connector	17 Front panel connector
3 Microprocessor	18 Front USB connector 2 (for connecting USB ports 1 and 2 on the front bezel)
4 Microprocessor fan connector	19 Front USB connector 1 (for connecting additional USB devices)
5 Memory slot 1 (DIMM1)	20 Clear CMOS (Complementary Metal Oxide Semiconductor) /Recovery jumper
6 Memory slot 2 (DIMM2)	21 Serial (COM2) connector
7 Memory slot 3 (DIMM3)	22 Internal speaker connector
8 Memory slot 4 (DIMM4)	23 Front audio connector
9 Thermal sensor connector	24 PCI card slot
10 Hard disk drive fan connector	25 PCI Express card slot (physical link width x16; negotiable link width x4, x1)
11 4-pin SATA power connectors (2)	26 PCI Express x1 card slot
12 14-pin power connector	27 PCI Express x16 graphics card slot
13 eSATA connector	28 System fan connector

14 Parallel connector	29 Cover presence switch connector (intrusion switch connector)
15 SATA 3.0 connectors (3)	30 Battery

Figure 13 “ThinkCentre M83 system board part locations” on page 84 shows the locations of the parts on the other type of system board.

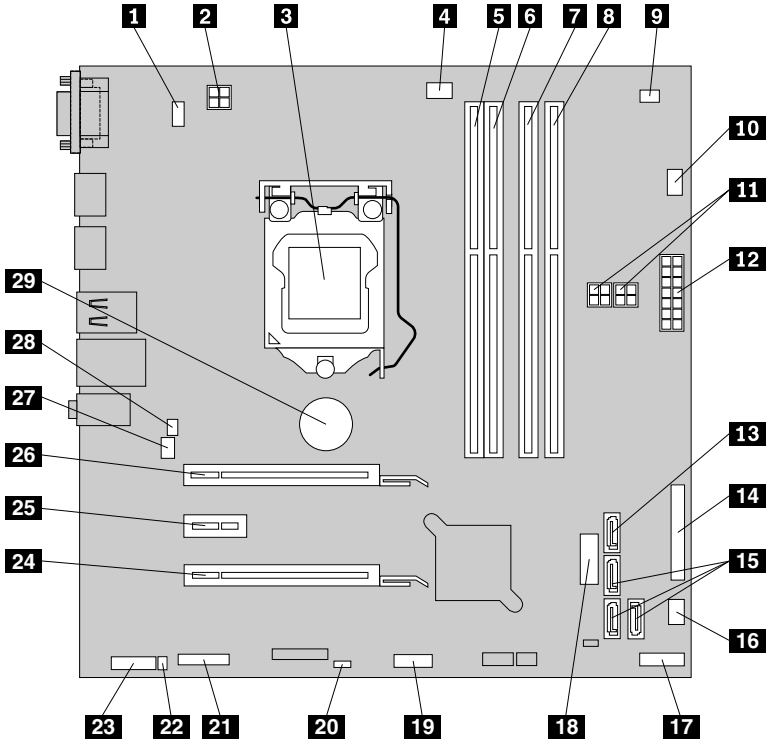

Figure 13. ThinkCentre M83 system board part locations

1 PS/2 keyboard and mouse connector	16 Power fan connector
2 4-pin power connector	17 Front panel connector
3 Microprocessor	18 Front USB connector 2 (for connecting USB ports 1 and 2 on the front bezel)
4 Microprocessor fan connector	19 Front USB connector 1 (for connecting additional USB devices)
5 Memory slot 1 (DIMM1)	20 Clear CMOS (Complementary Metal Oxide Semiconductor) /Recovery jumper
6 Memory slot 2 (DIMM2)	21 Serial (COM2) connector
7 Memory slot 3 (DIMM3)	22 Internal speaker connector
8 Memory slot 4 (DIMM4)	23 Front audio connector
9 Thermal sensor connector	24 PCI Express card slot (physical link width x16; negotiable link width x4, x1)
10 Hard disk drive fan connector	25 PCI Express x1 card slot
11 4-pin SATA power connectors (2)	26 PCI Express x16 graphics card slot
12 14-pin power connector	27 System fan connector

13 eSATA connector	28 Cover presence switch connector (intrusion switch connector)
14 Parallel connector	29 Battery
15 SATA 3.0 connectors (3)	

Locating internal drives

Internal drives are devices that your computer uses to read and store data. You can add drives to your computer to increase storage capacity and enable your computer to read other types of media. Internal drives are installed in bays. In this manual, the bays are referred to as bay 1, bay 2, and so on. Your computer comes with the following factory-installed drives:

- An optical drive in bay 1
- A 3.5-inch hard disk drive or a 2.5-inch solid state disk in bay 3

When installing or replacing an internal drive, it is important to note the type and size of the drive that you can install or replace in each bay and correctly connect the cables to the drive installed. Refer to the appropriate section in Chapter 9 “Replacing FRUs (machine types: 10A2, 10A3, 10A8, 10A9, 10AH, 10AJ, 10AM, and 10AN)” on page 159 for instructions on how to install or replace internal drives for your computer.

Figure 14 “Drive bay locations” on page 85 shows the locations of the drive bays.

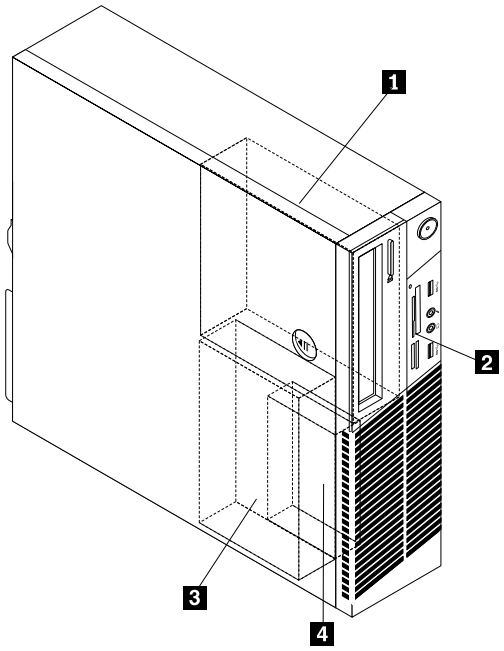

Figure 14. Drive bay locations

1 Bay 1 - Optical drive bay (with an optical drive installed on some models)

2 Bay 2 - Card reader drive bay (with a card reader assembly, front USB assembly, or mSATA solid-state-drive installed on some models)

3 Bay 3 - Primary SATA hard disk drive bay (with a 3.5-inch SATA hard disk drive installed)

4 Bay 4 - Secondary SATA hard disk drive bay (with an optional 2.5-inch SATA hard disk drive installed)

For machine types: 10A4, 10A5, 10AA, 10AB, 10DF, 10DG, 10DH, 10DJ, 10E8, 10E9, 10EA, and 10EB

Locating connectors, controls, and indicators on the front of your computer

Figure 15 “Front connector, control, and indicator locations” on page 86 shows the locations of the connectors, controls, and indicators on the front of your computer.

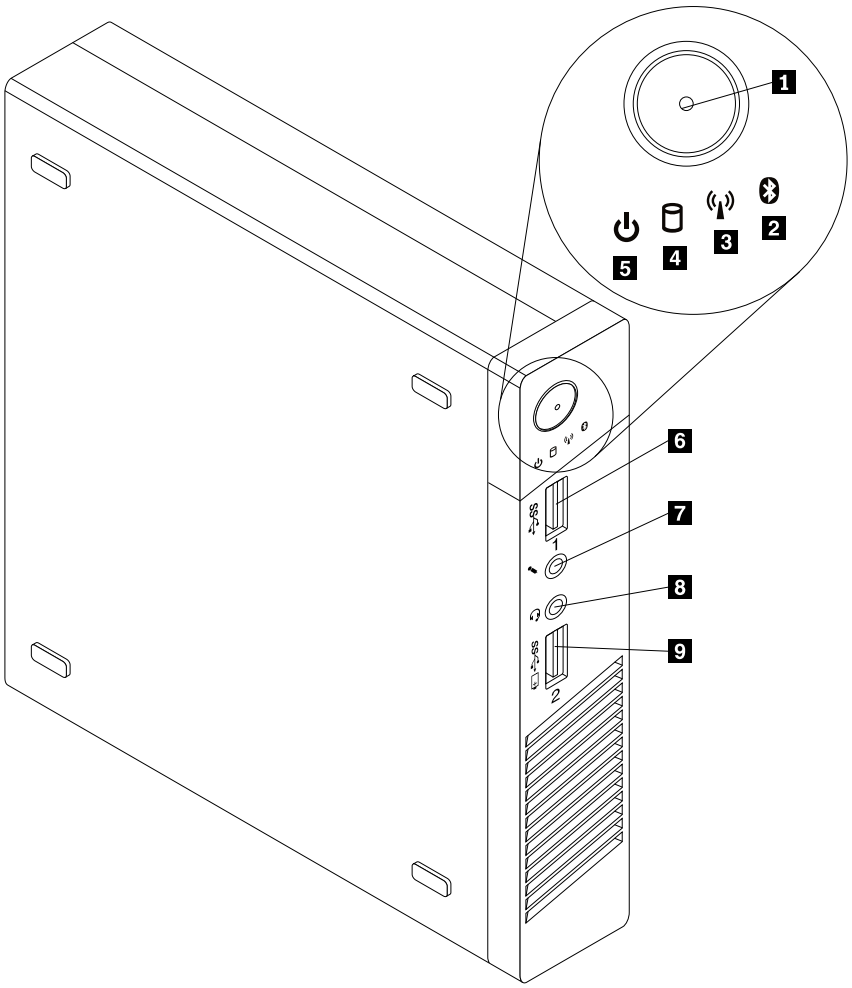

Figure 15. Front connector, control, and indicator locations

1 Power button	2 Bluetooth activity indicator
3 Wireless activity indicator	4 Hard disk drive activity indicator
5 Power indicator	6 USB 3.0 connector
7 Microphone connector	8 Headset connector (also known as combo audio jack)
9 Always On USB 3.0 connector	

Notes:

- Indicators 2, 3, 4, and 5 are visible only when they are lit.
- The headset connector 8 supports a microphone-integrated headset and does not support a conventional microphone.
- By default, the Always On USB 3.0 connector 9 enables you to charge some mobile digital devices and smartphones when your computer is in sleep or hibernation mode or is powered off.

Locating connectors on the rear of your computer

Figure 16 “Rear connector locations” on page 87 shows the locations of the connectors on the rear of your computer. Some connectors on the rear of your computer are color-coded to help you determine where to connect the cables on your computer.

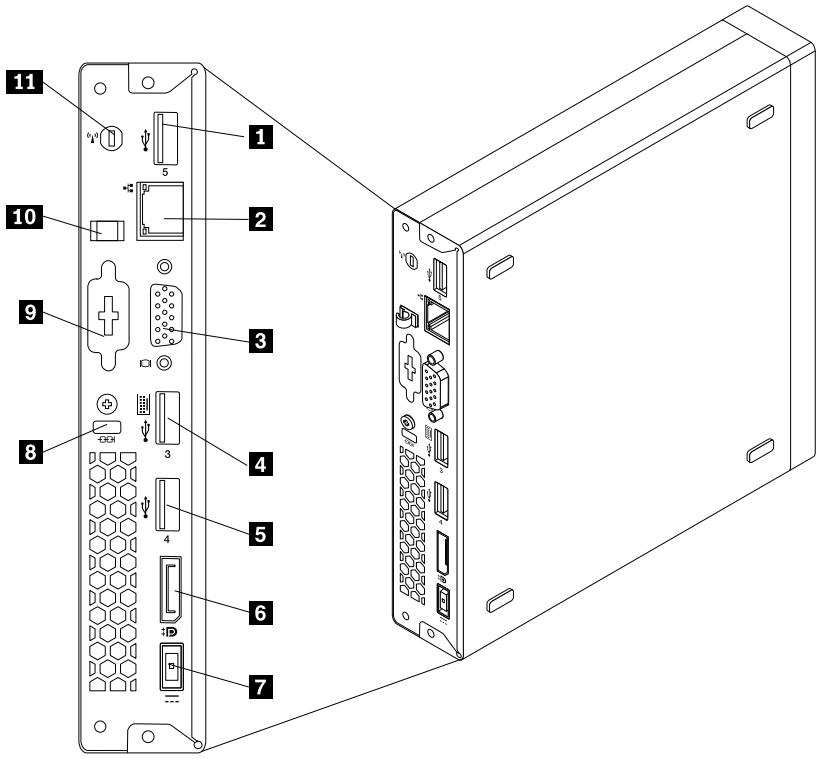

Figure 16. Rear connector locations

1 USB 2.0 connector (ThinkCentre® M83) or USB 3.0 connector (ThinkCentre M93/p)	2 Ethernet connector
3 VGA monitor connector	4 USB 3.0 connector
5 USB 3.0 connector	6 DisplayPort connector

7 ac power adapter connector	8 Security-lock slot
9 Optional connector	10 ac power adapter cable loop
11 Wi-Fi antenna slot	

Note: The USB 3.0 connector 4 supports the smart power on feature. If you connect a Lenovo-recommended USB 1.1 keyboard to this connector, you can power on the computer or wake it up from S4 hibernation mode by pressing Alt+P on the keyboard. Ensure that you use a Lenovo-recommended keyboard that supports the smart power on feature.

Connector	Description
DisplayPort connector	Used to attach a high-performance monitor, a direct-drive monitor, or other devices that use a DisplayPort connector.
Ethernet connector	Used to attach an Ethernet cable for a local area network (LAN). **Note:** To operate the computer within FCC Class B limits, use a Category 5 Ethernet cable.
Optional port	Used to install a serial port, a DisplayPort connector, or a USB 2.0 connector. **Note:** If you use the optional port for installing a serial port, the serial port and the adjacent VGA monitor connector might interfere with each other when connecting cables. To avoid the interference, ensure that you use the serial port convert cable that comes with the computer when you connect a device to the serial port.
USB 3.0 connector	Used to attach a device that requires a USB 2.0 or 3.0 connection, such as a keyboard, a mouse, a scanner, a printer, or a personal digital assistant (PDA).
VGA monitor connector	Used to attach a VGA monitor or other devices that use a VGA monitor connector.

Locating major FRUs and CRUs

Figure 17 “Component locations” on page 89 shows the locations of the various components in your computer. To remove the computer cover, see “Removing the computer cover” on page 237.

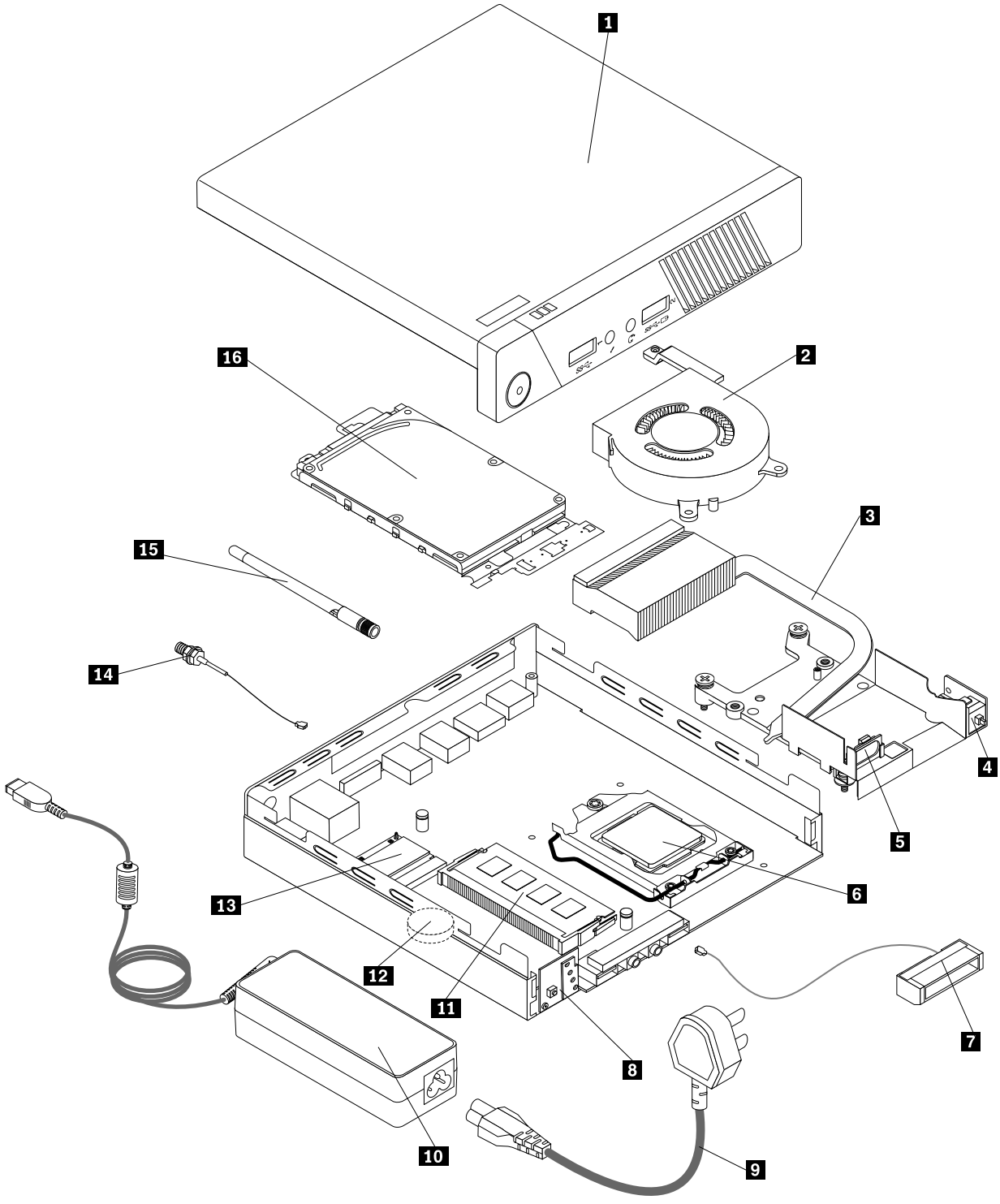

Figure 17. Component locations

The following table lists the major FRUs shown in Figure 17 “Component locations” on page 89 and identifies which FRUs also are self-service CRUs or optional-service CRUs.

Notes:

- Self-service CRUs: These CRUs unplug or are secured by no more than two screws. Examples of these types of CRUs include the keyboard, the mouse, any USB device, and the power cord. Other self-service CRUs depending on product design might include memory modules, adapter cards, hard disk drives, and optical drives.
- Optional-service CRUs: These CRUs are isolated parts within the computer and are concealed by an access panel that is typically secured by more than two screws. Once the access panel is removed, the specific CRU is visible.

Number	FRU description	Self-service CRU	Optional-service CRU
1	Computer cover	No	Yes
2	System fan	No	Yes
3	Thermal module	No	Yes
4	Cover presence switch (intrusion switch)	No	Yes
5	Internal speaker	No	Yes
6	Microprocessor	No	Yes
7	Front Wi-Fi antenna	Yes	No
8	Power switch board	No	Yes
9	Power cord	No	No
10	ac power adapter	No	No
11	Memory modules	Yes	No
12	Battery	No	No
13	Wi-Fi card module	No	Yes
14	Rear Wi-Fi antenna cable	Yes	No
15	Rear Wi-Fi antenna	Yes	No
16	Hard disk drive assembly (with a hard disk drive or solid-state drive installed)	No	No

Looking up FRU information

For detailed FRU information, such as the FRU part numbers and supported computer models, go to: http:/www.lenovo.com/serviceparts-lookup

Locating parts on the system board

Note: Your computer comes with one of the following system boards.

Figure 18 “System board part locations” on page 91 shows the locations of the parts on the system board.

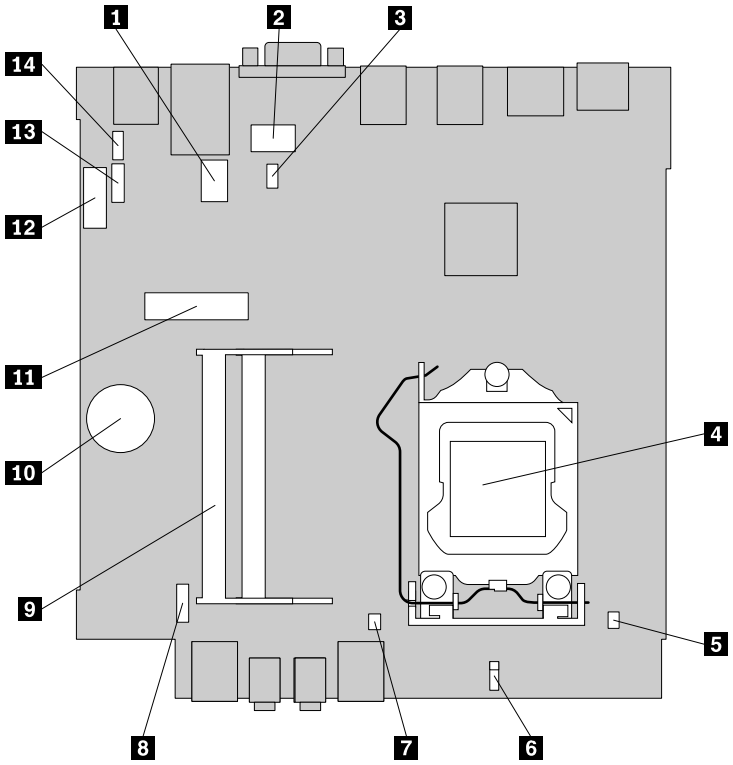

Figure 18. System board part locations

1 Serial (COM1) connector	8 Power switch board cable connector
2 Optional DisplayPort connector	9 Memory slots (2)
3 System fan connector	10 Battery
4 Microprocessor	11 Mini PCI Express card slot
5 Cover presence switch connector (intrusion switch connector)	12 SATA 3.0 connector
6 Clear CMOS (Complementary Metal Oxide Semiconductor) /Recovery jumper	13 Hard disk drive power connector
7 Internal speaker connector	14 Optional USB 2.0 connector

Chapter 8. Replacing FRUs (machine types: 10A0, 10A1, 10A6, 10A7, 10AG, 10AK, 10AL, and 10BE)

Important

Before you replace any FRU, read Chapter 1 “Safety information” on page 1. These precautions and guidelines will help you work safely.

FRU replacements are to be done by trained service technicians only.

This chapter provides instructions about removing or replacing major FRUs. Not all FRUs are documented.

Removing the computer cover

Attention: Do not open your computer or attempt any repair before reading and understanding the Chapter 1 “Safety information” on page 1.

CAUTION:



Before you open the computer cover, turn off the computer and wait several minutes until the computer is cool.

Attention: Do not open your computer or attempt any repair before reading and understanding the Chapter 1 “Safety information” on page 1.

To remove the computer cover, do the following:

1. Remove any media from the drives and turn off all attached devices and the computer.
2. Disconnect all power cord from electrical outlets.
3. Disconnect the power cords, Input/Output cables, and any other cables that are connected to the computer. See “Locating connectors, controls, and indicators on the front of your computer” on page 67 and “Locating connectors on the rear of your computer” on page 67.
4. Remove any screws that secure the computer cover.
5. Press the cover-release button on the side of the computer and slide the cover to the rear of the computer to remove the cover.

© Copyright Lenovo 2013, 2015

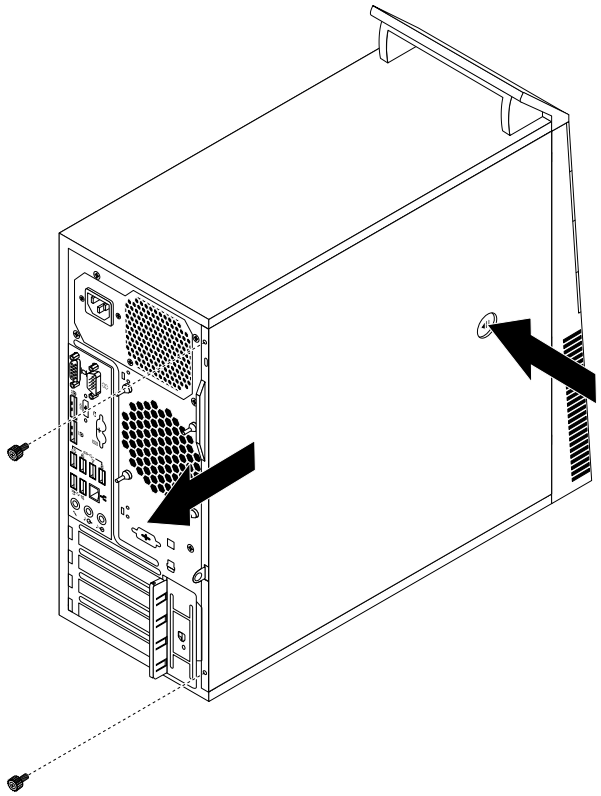

Figure 19. Removing the computer cover

gzi

Removing and reinstalling the front bezel

Attention: Do not open your computer or attempt any repair before reading and understanding the Chapter 1 “Safety information” on page 1.

To remove and reinstall the front bezel, do the following:

1. Remove all media from the drives and turn off all attached devices and the computer. Then, disconnect all power cords from electrical outlets and disconnect all cables that are connected to the computer.
2. Remove the computer cover. See “Removing the computer cover” on page 93.

3. Remove the front bezel by releasing the three plastic tabs on the left side and pivoting the front bezel outward.

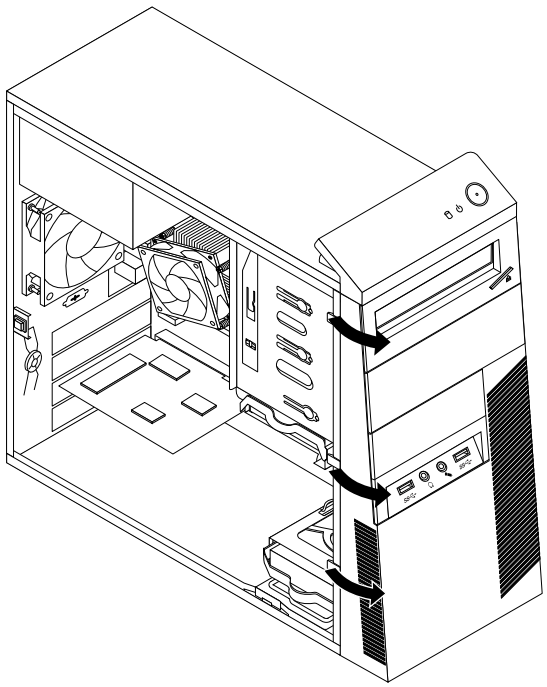

Figure 20. Removing the front bezel

4. To reinstall the front bezel, align the three plastic tabs on the right side of the front bezel with the corresponding holes in the chassis. Then, pivot the front bezel inwards until it snaps into position on the left side.

What to do next:

- To work with another piece of hardware, go to the appropriate section.
- To complete the installation or replacement, go to "Completing the parts replacement" on page 156.

Installing or replacing a PCI card

Attention: Do not open your computer or attempt any repair before reading and understanding the Chapter 1 "Safety information" on page 1.

This section provides instructions on how to install or replace a PCI card. Your computer has various PCI card slots..

To install or replace a PCI card, do the following:

1. Remove all media from the drives and turn off all attached devices and the computer. Then, disconnect all power cords from electrical outlets and disconnect all cables that are connected to the computer.
2. Remove the computer cover. See "Removing the computer cover" on page 93.

3. At the rear of the computer, press the release button 1 to open the card latch 2.

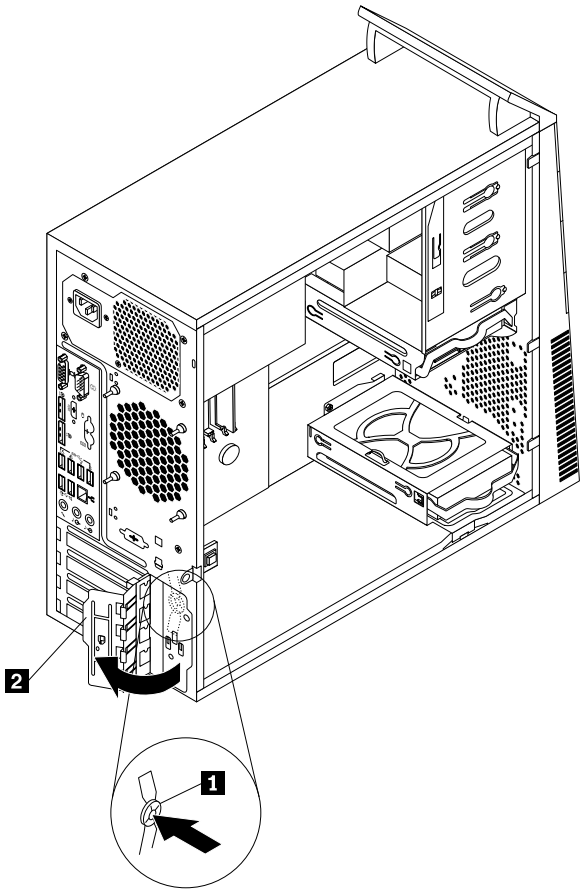

Figure 21. Opening the PCI card latch

4. Depending on whether you are installing or replacing a PCI card, do one of the following:
   - If you are installing a PCI card, remove the appropriate metal slot cover.
   - If you are replacing an old PCI card, grasp the old card that is currently installed and gently pull it out of the slot.

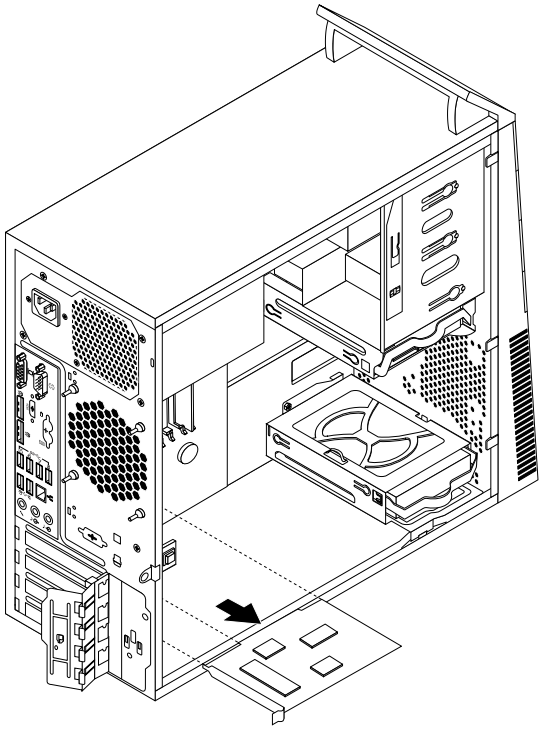

Figure 22. Removing a PCI card

Notes:

– The card fits tightly into the card slot. If necessary, alternate moving each side of the card a small and equal amount until the card is removed from the slot.

– If the card is held in place by a retaining latch, press the retaining latch **1** as shown to disengage the latch. Grasp the card and gently pull it out of the slot.

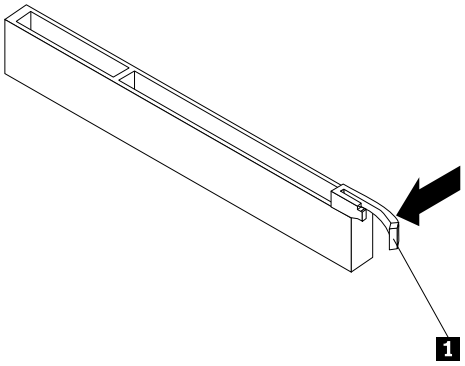

5. Remove the new PCI card from its static-protective package.

6. Install the new card into the appropriate slot on the system board. See “Locating parts on the system board” on page 72.

   Note: If you are installing a PCI Express x16 graphics card, make sure that the memory slot retaining clips are closed before you install the graphics card.
7. Pivot the card latch to the closed position to secure the PCI card.

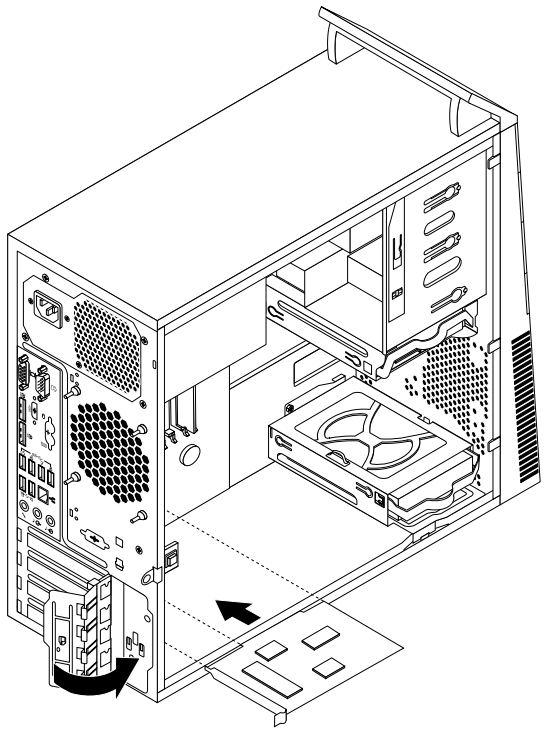

Figure 23. Installing a PCI card

What to do next:

- To work with another piece of hardware, go to the appropriate section.
- To complete the installation or replacement, go to “Completing the parts replacement” on page 156.

Installing or replacing a memory module

Attention: Do not open your computer or attempt any repair before reading and understanding the Chapter 1 “Safety information” on page 1.

This section provides instructions on how to install or replace a memory module.

Your computer has four memory slots for installing or replacing double data rate 3 unbuffered dual inline memory modules (DDR3 UDIMMs) that provide up to a maximum of 32 GB system memory. When installing or replacing a memory module, use 2 GB, 4 GB or 8 GB DDR3 UDIMMs in any combination up to a maximum of 32 GB.

The following table provides information about the memory module installation rules that you should consider when installing or removing a memory module. The “X” mark indicates the memory slots into which the memory modules should be installed in different situations. The numbers 1, 2, 3, and 4 indicate the

installation sequence. To locate the memory module slots, see “Locating parts on the system board” on page 72.

UDIMM	DIMM 1	DIMM 2	DIMM 3	DIMM 4
One UDIMM		X		
Two UDIMMs		X, 1		X, 2
Three UDIMMs	X, 3	X, 1		X, 2
Four UDIMMs	X, 3	X, 1	X, 4	X, 2

To install or replace a memory module, do the following:

1. Remove all media from the drives and turn off all attached devices and the computer. Then, disconnect all power cords from electrical outlets and disconnect all cables that are connected to the computer.
2. Remove the computer cover. See “Removing the computer cover” on page 93.
3. Lay the computer on its side for easier access to the system board.
4. Locate the memory slots. See “Locating parts on the system board” on page 72.
5. Remove any parts that might prevent your access to the memory slots. Depending on your computer model, you might need to remove the PCI Express x16 graphics card for easier access to the memory slots. See “Installing or replacing a PCI card” on page 95.
6. Depending on whether you are installing or replacing a memory module, do one of the following:
   - If you are replacing an old memory module, open the retaining clips and gently pull the memory module out of the memory slot.

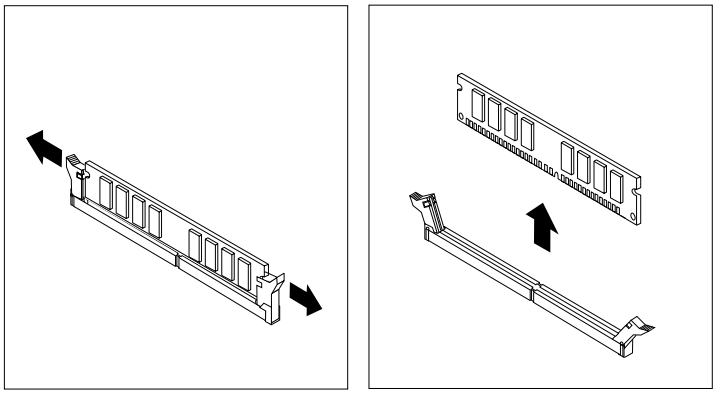

Figure 24. Removing a memory module

- If you are installing a memory module, open the retaining clips of the memory slot into which you want to install the memory module.

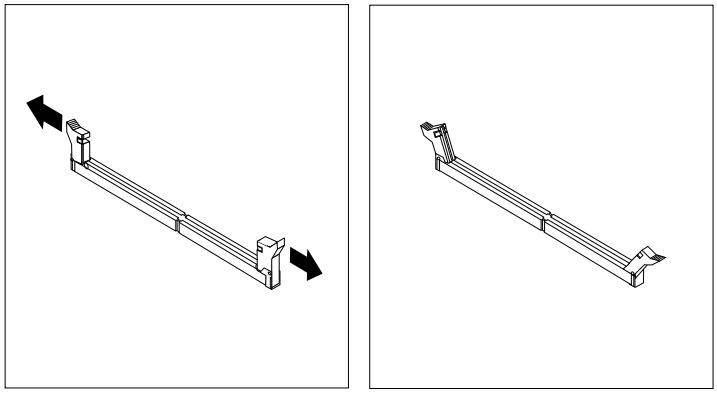

Figure 25. Opening the retaining clips

7. Position the new memory module over the memory slot. Make sure that the notch 1 on the memory module aligns correctly with the slot key 2 on the system board. Push the memory module straight down into the slot until the retaining clips close.

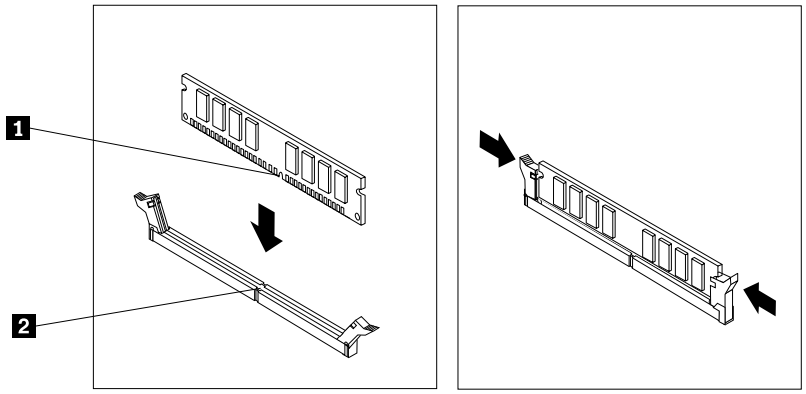

Figure 26. Installing a memory module

8. Reinstall the PCI Express x16 graphics card if you have removed it.

What to do next:

- To work with another piece of hardware, go to the appropriate section.
- To complete the installation or replacement, go to “Completing the parts replacement” on page 156.

Replacing the optical drive

Attention: Do not open your computer or attempt any repair before reading and understanding the Chapter 1 “Safety information” on page 1.

This section provides instructions on how to replace the optical drive.

Note: The optical drive is available only in some models.

To replace the optical drive, do the following:

1. Remove all media from the drives and turn off all attached devices and the computer. Then, disconnect all power cords from electrical outlets and disconnect all cables that are connected to the computer.
2. Remove the computer cover. See “Removing the computer cover” on page 93.
3. Remove the front bezel. See “Removing and reinstalling the front bezel” on page 94.
4. Depending on whether you are installing or replacing an optical drive, do one of the following:
   - If you are installing a secondary optical drive, remove the plastic panel in the front bezel for the drive bay you want to use. If there is a metal static shield installed in the drive bay, remove the metal static shield.
   - If you are replacing an optical drive, disconnect the signal cable and the power cable from the rear of the optical drive, press the blue release button, and then slide the optical drive out of the front of the computer.

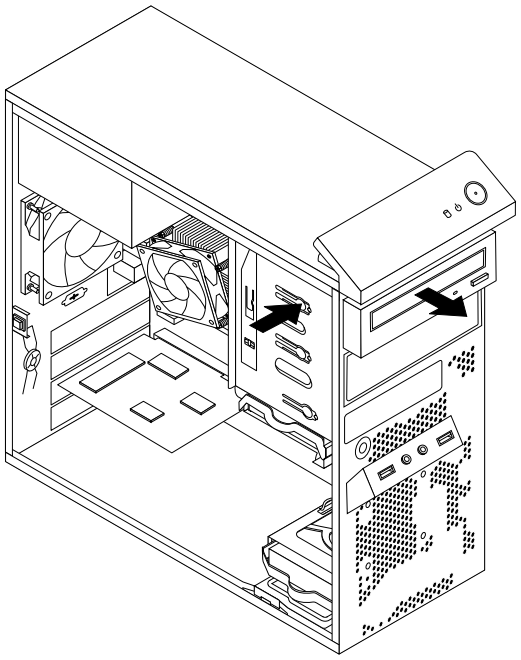

Figure 27. Removing the optical drive

5. Install the optical drive retainer on the side of the new optical drive.

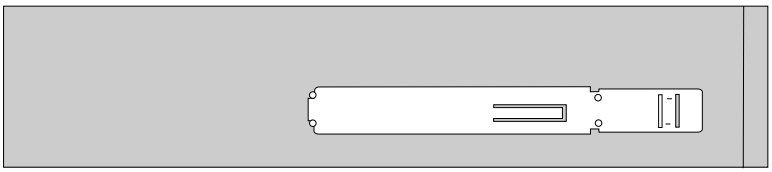

Figure 28. Installing the optical drive retainer

6. Slide the new optical drive into the drive bay from the front of the computer until the optical drive snaps into position.

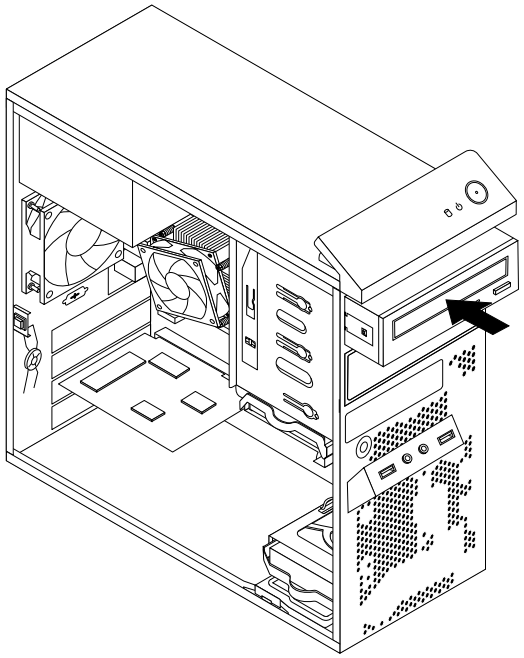

Figure 29. Installing the optical drive

7. Connect the signal cable and the power cable to the new optical drive.

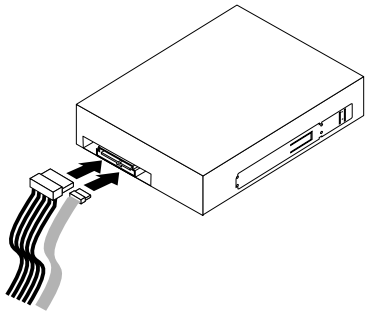

Figure 30. Connecting the optical drive

8. Reinstall the front bezel. See “Removing and reinstalling the front bezel” on page 94.

What to do next:

- To work with another piece of hardware, go to the appropriate section.
- To complete the installation or replacement, go to “Completing the parts replacement” on page 156.

Installing or replacing the card reader

This section provides instructions on how to replace the card reader.

Attention: Do not open your computer or attempt any repair before reading and understanding the Chapter 1 “Safety information” on page 1.

Installing the card reader

To install the card reader, do the following:

1. Remove all media from the drives and turn off all attached devices and the computer. Then, disconnect all power cords from electrical outlets and disconnect all cables that are connected to the computer.
2. Remove the computer cover. See “Removing the computer cover” on page 93.
3. Remove the front bezel. See “Removing and reinstalling the front bezel” on page 94.
4. Locate the card reader drive bay. See “Locating internal drives” on page 76.
5. Carefully pivot the card reader retainer as shown to remove it from the chassis.

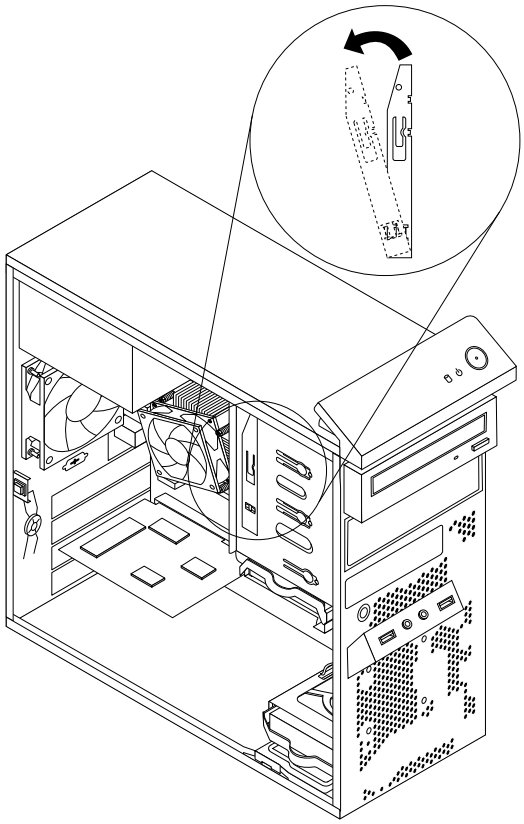

Figure 31. Removing the card reader retainer

6. Install the card reader retainer on the side of the new card reader.

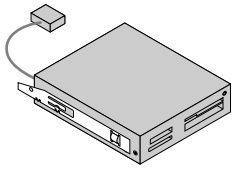

Figure 32. Installing the card reader retainer

7. Slide the new card reader with retainer into the card reader drive bay until it snaps into position.

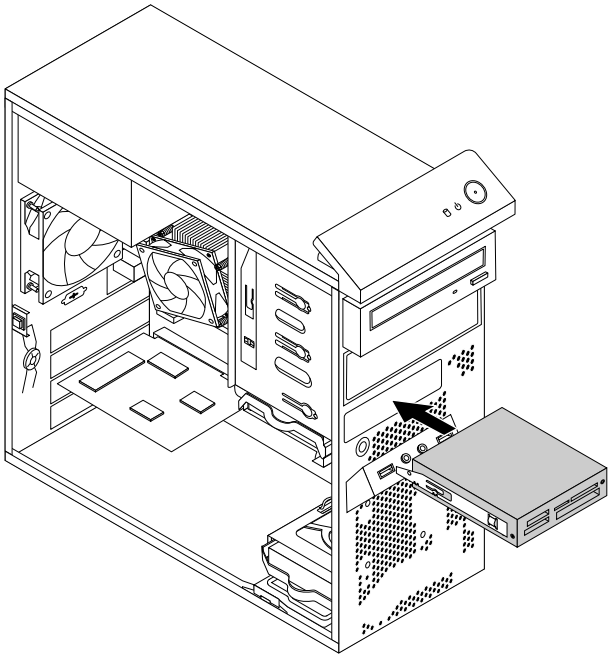

Figure 33. Installing the card reader

8. Connect the card reader cable to the front USB connector 2 on the system board. See “Locating parts on the system board” on page 72.
9. Locate the protective cover for the card reader drive bay on the front bezel. Remove the protective cover by pressing the small tabs **1** to the left, and then pulling the tabs to completely disengage the cover from the front bezel.

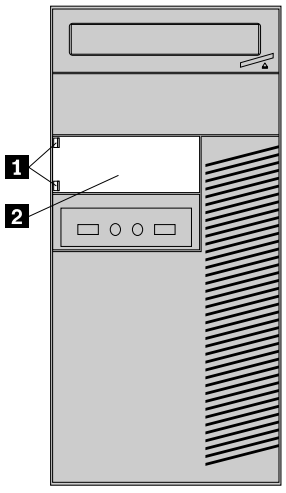

Figure 34. Removing the card reader cover

10. Reinstall the front bezel. See “Removing and reinstalling the front bezel” on page 94.

What to do next:

- To work with another piece of hardware, go to the appropriate section.
- To complete the installation or replacement, go to “Completing the parts replacement” on page 156.

Replacing the card reader

Attention: Do not open your computer or attempt any repair before reading and understanding the Chapter 1 “Safety information” on page 1.

To replace the card reader, do the following:

1. Remove all media from the drives and turn off all attached devices and the computer. Then, disconnect all power cords from electrical outlets and disconnect all cables that are connected to the computer.
2. Remove the computer cover. See “Removing the computer cover” on page 93.
3. Remove the front bezel. See “Removing and reinstalling the front bezel” on page 94.
4. Locate the card reader drive bay. See “Locating internal drives” on page 76.
5. Disconnect the card reader cable from the front USB connector 2 on the system board.
6. Press the blue retaining clip **1** and slide the card reader out of the chassis.

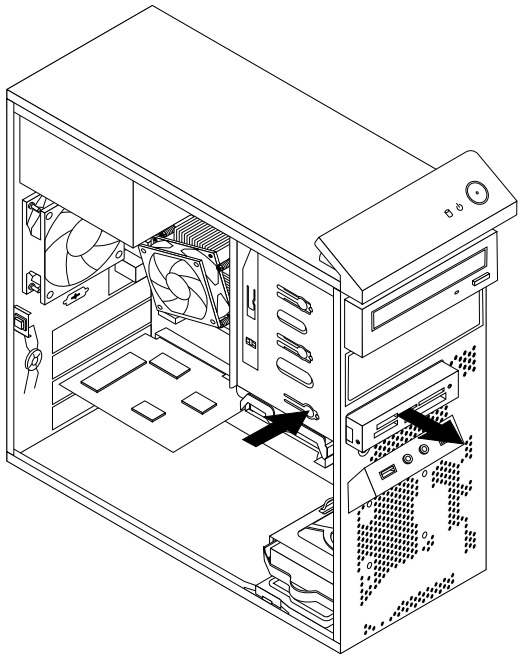

Figure 35. Removing the card reader

7. Remove the card reader retainer from the old card reader and install it on the side of the new card reader.

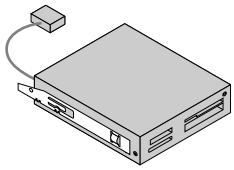

Figure 36. Installing the card reader retainer

8. Slide the new card reader with retainer into the drive bay until it snaps into position.

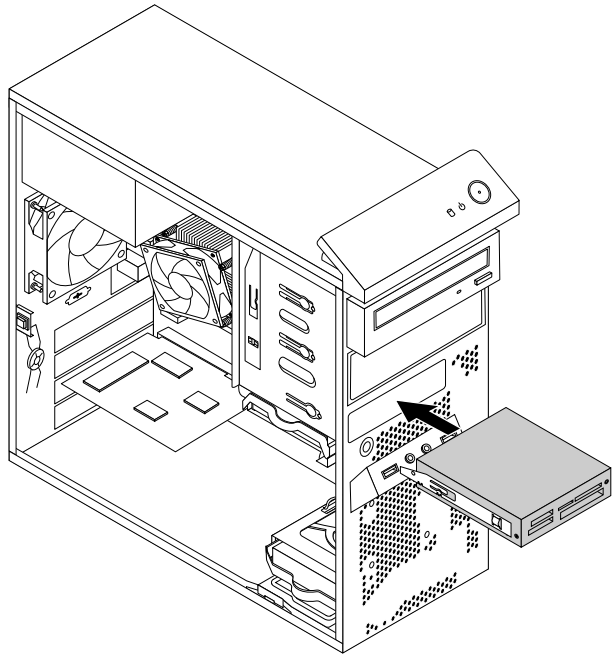

Figure 37. Installing the card reader

9. Reconnect the card reader cable to the front USB connector 2 on the system board. See “Locating parts on the system board” on page 72.
10. Reinstall the front bezel. See “Removing and reinstalling the front bezel” on page 94.

What to do next:

- To work with another piece of hardware, go to the appropriate section.
- To complete the installation or replacement, go to “Completing the parts replacement” on page 156.

Installing or replacing the front USB assembly

Attention: Do not open your computer or attempt any repair before reading and understanding the Chapter 1 “Safety information” on page 1.

This section provides instructions on how to replace the front USB assembly.

Note: The front USB assembly is available only in some models.

Installing the front USB assembly

To install the front USB assembly, do the following:

1. Remove all media from the drives and turn off all attached devices and the computer. Then, disconnect all power cords from electrical outlets and disconnect all cables that are connected to the computer.
2. Remove the computer cover. See “Removing the computer cover” on page 93.
3. Remove the front bezel. See “Removing and reinstalling the front bezel” on page 94.
4. Locate the card reader drive bay. See “Locating internal drives” on page 76.

5. Carefully pivot the card reader retainer as shown to remove it from the chassis.

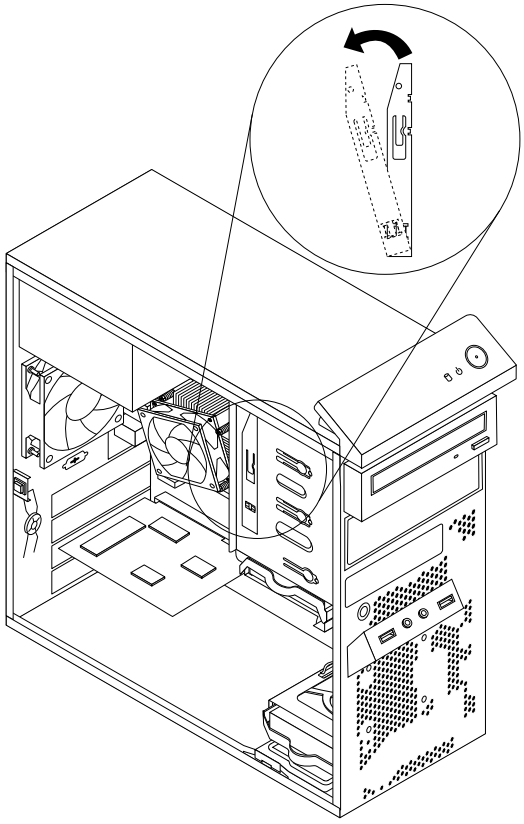

Figure 38. Removing the card reader retainer

6. Install the card reader retainer on the side of the new front USB assembly.

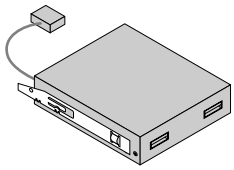

Figure 39. Installing the card reader retainer

7. Slide the new front USB assembly with retainer into the card reader drive bay until it snaps into position.

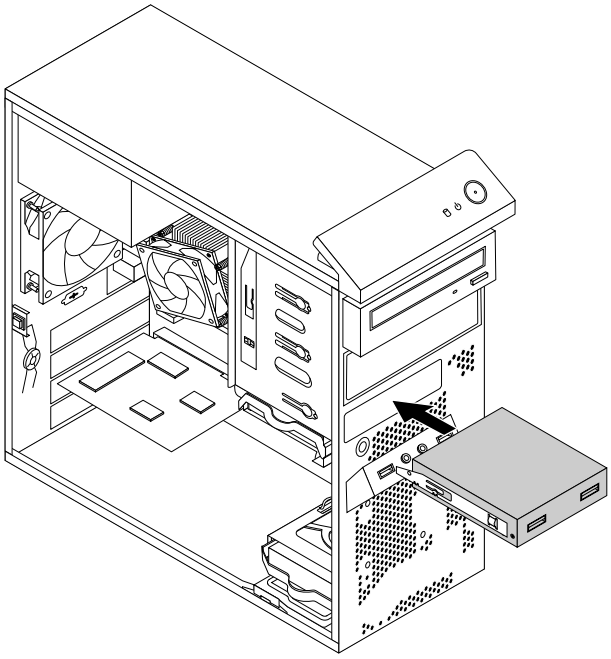

Figure 40. Installing the front USB assembly

8. Connect the front USB assembly cable to the front USB connector 2 on the system board. See “Locating parts on the system board” on page 72.
9. Locate the protective cover for the card reader drive bay on the front bezel. Remove the protective cover by pressing the small tabs **1** to the left, and then pulling the tabs to completely disengage the cover from the front bezel.

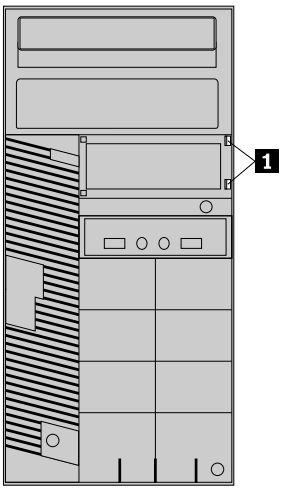

Figure 41. Removing the card reader cover

10. Reinstall the front bezel. See “Removing and reinstalling the front bezel” on page 94.

What to do next:

- To work with another piece of hardware, go to the appropriate section.
- To complete the installation or replacement, go to “Completing the parts replacement” on page 156.

Replacing the front USB assembly

Attention: Do not open your computer or attempt any repair before reading and understanding the Chapter 1 “Safety information” on page 1.

To replace the front USB assembly, do the following:

1. Remove all media from the drives and turn off all attached devices and the computer. Then, disconnect all power cords from electrical outlets and disconnect all cables that are connected to the computer.
2. Remove the computer cover. See “Removing the computer cover” on page 93.
3. Remove the front bezel. See “Removing and reinstalling the front bezel” on page 94.
4. Locate the card reader drive bay. See “Locating internal drives” on page 76.
5. Disconnect the front USB assembly cable.
6. Press the retaining clip 1 and slide the front USB assembly out of the chassis.

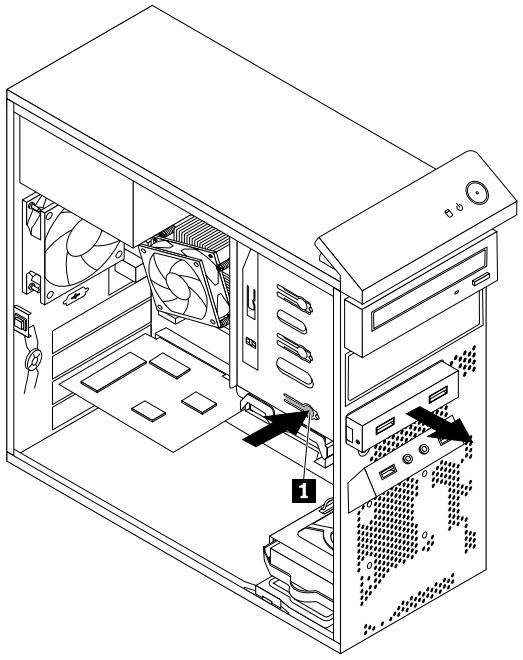

Figure 42. Removing the front USB assembly

7. Remove the card reader retainer from the old front USB assembly and install it on the side of the new front USB assembly.

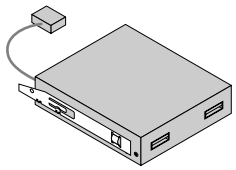

Figure 43. Installing the card reader retainer

8. Slide the new front USB assembly with retainer into the card reader drive bay until it snaps into position.

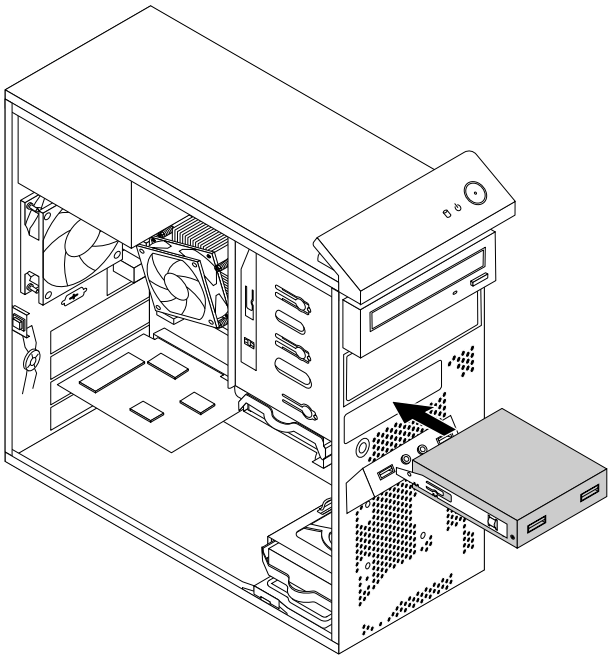

Figure 44. Installing the front USB assembly

9. Connect the cable of the new front USB assembly to the front USB connector 2 on the system board. See “Locating parts on the system board” on page 72.
10. Reinstall the front bezel. See “Removing and reinstalling the front bezel” on page 94.

What to do next:

- To work with another piece of hardware, go to the appropriate section.
- To complete the installation or replacement, go to “Completing the parts replacement” on page 156.

Replacing the battery

Attention: Do not open your computer or attempt any repair before reading and understanding the Chapter 1 “Safety information” on page 1.

This section provides instructions on how to replace the battery.

Your computer has a special type of memory that maintains the date, time, and settings for built-in features, such as parallel-port assignments (configuration). A battery keeps this information active when you turn off the computer.

The battery normally requires no charging or maintenance throughout its life; however, no battery lasts forever. If the battery fails, the date, time, and configuration information (including passwords) are lost. An error message is displayed when you turn on the computer.

Refer to the “Lithium coin cell battery notice” in the *Safety, Warranty, and Setup Guide* for information about replacing and disposing of the battery.

To replace the battery, do the following:

1. Remove all media from the drives and turn off all attached devices and the computer. Then, disconnect all power cords from electrical outlets and disconnect all cables that are connected to the computer.
2. Remove the computer cover. See “Removing the computer cover” on page 93.
3. Locate the battery. See “Locating parts on the system board” on page 72.
4. Remove the old battery.

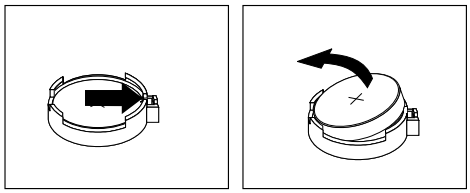

Figure 45. Removing the old battery

5. Install a new battery.

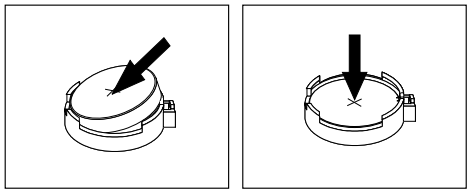

Figure 46. Installing a new battery

6. Reinstall the computer cover and connect the cables. See “Completing the parts replacement” on page 156.

   Note: When the computer is turned on for the first time after replacing the battery, an error message might be displayed. This is normal after replacing the battery.
7. Turn on the computer and all attached devices.
8. Use the Setup Utility program to set the date, time, and any passwords. See Chapter 5 “Using the Setup Utility program” on page 55.

What to do next:

- To work with another piece of hardware, go to the appropriate section.
- To complete the installation or replacement, go to “Completing the parts replacement” on page 156.

Replacing the power supply assembly

Attention: Do not open your computer or attempt any repair before reading and understanding the Chapter 1 “Safety information” on page 1.

This section provides instructions on how to replace the power supply assembly.

Although there are no moving parts in your computer after the power cord has been disconnected, the following warnings are required for your safety and proper Underwriters Laboratories (UL) certification.

CAUTION:

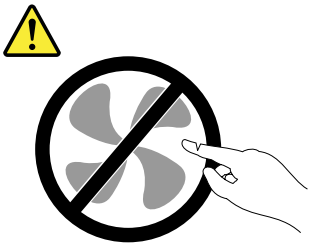

Hazardous moving parts. Keep fingers and other body parts away.

CAUTION:
Never remove the cover on a power supply or any part that has the following label attached.



Hazardous voltage, current, and energy levels are present inside any component that has this label attached. There are no serviceable parts inside these components. If you suspect a problem with one of these parts, contact a service technician.

To replace the power supply assembly, do the following:

1. Remove all media from the drives and turn off all attached devices and the computer. Then, disconnect all power cords from electrical outlets and disconnect all cables that are connected to the computer.
2. Remove the computer cover. See “Removing the computer cover” on page 93.
3. Disconnect the power supply assembly cables from the system board and all drives. See “Locating parts on the system board” on page 72.
4. Release the power supply assembly cables from the cable clips and ties in the chassis.

5. Lay the computer on its side and remove the four screws at the rear of the chassis that secure the power supply assembly.

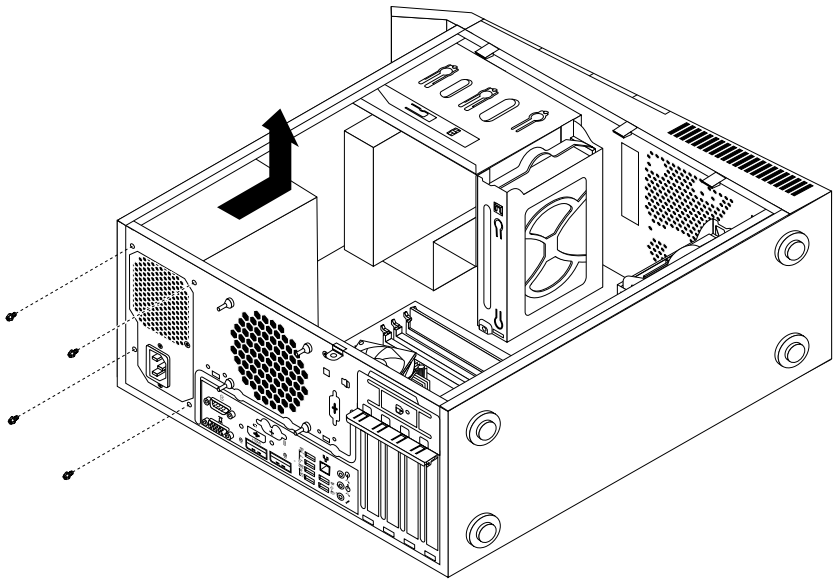

Figure 47. Removing the screws for the power supply assembly

6. Slide the power supply assembly to the front of the computer, and then lift it out of the chassis.
7. Ensure that the new power supply assembly is the correct replacement.
8. Install the new power supply assembly into the chassis so that the screw holes in the power supply assembly align with those in the chassis.
9. Install and tighten the four screws to secure the power supply assembly.

   Note: Use only screws provided by Lenovo.
10. Reconnect the power supply assembly cables to the system board and each of the drives.
11. Secure the power supply assembly cables with the cable clips and ties in the chassis.

What to do next:

- To work with another piece of hardware, go to the appropriate section.
- To complete the installation or replacement, go to "Completing the parts replacement" on page 156.

Replacing the heat sink and fan assembly

Attention: Do not open your computer or attempt any repair before reading and understanding the Chapter 1 "Safety information" on page 1.

CAUTION:



The heat sink and fan assembly might be very hot. Before you open the computer cover, turn off the computer and wait several minutes until the computer is cool.

This section provides instructions on how to replace the heat sink and fan assembly.

CAUTION:



The heat sink and fan assembly might be very hot. Turn off the computer and wait three to five minutes to let the computer cool before removing the computer cover.

To replace the heat sink and fan assembly, do the following:

1. Remove all media from the drives and turn off all attached devices and the computer. Then, disconnect all power cords from electrical outlets and disconnect all cables that are connected to the computer.
2. Remove the computer cover. See “Removing the computer cover” on page 93.
3. Lay the computer on its side for easier access to the system board.
4. Locate the heat sink and fan assembly. See “Locating parts on the system board” on page 72.
5. Disconnect the heat sink and fan assembly cable from the microprocessor fan connector on the system board. See “Locating parts on the system board” on page 72.
6. Follow this sequence to remove the four screws that secure the heat sink and fan assembly to the system board:
   a. Partially remove screw 1, then fully remove screw 2, and then fully remove screw 1.
   b. Partially remove screw 3, then fully remove screw 4, and then fully remove screw 3.

   Note: Carefully remove the four screws from the system board to avoid any possible damage to the system board. The four screws cannot be removed from the heat sink and fan assembly.

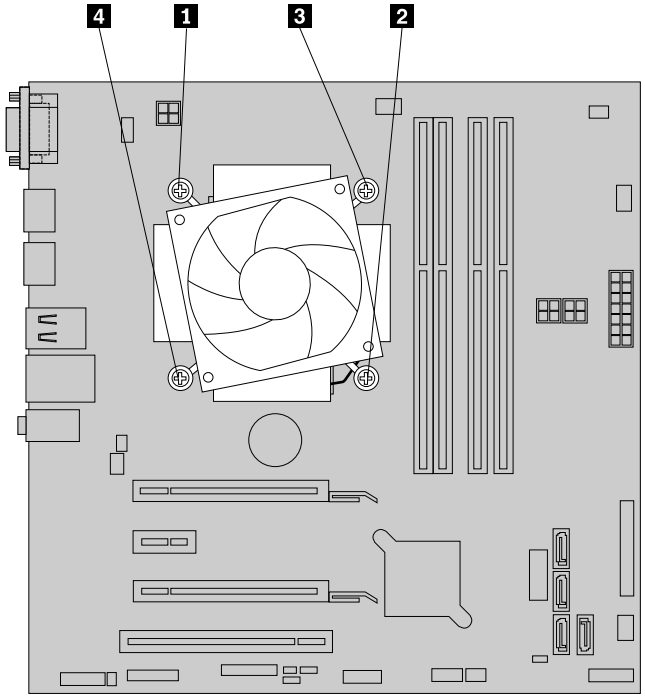

Figure 48. Removing the heat sink and fan assembly

7. Lift the failing heat sink and fan assembly off the system board.

   Notes:

   - You might have to gently twist the heat sink and fan assembly to free it from the microprocessor.
   - Do not touch the thermal grease while handling the heat sink and fan assembly.

8. Position the new heat sink and fan assembly on the system board so that the four screws are aligned with the holes on the system board.

   Note: Position the new heat sink and fan assembly so that the heat sink and fan assembly cable is toward the microprocessor fan connector on the system board.
9. Follow the following sequence to install the four screws to secure the new heat sink and fan assembly. Do not over-tighten the screws.
   a. Partially tighten screw 1, then fully tighten screw 2, and then fully tighten screw 1.
   b. Partially tighten screw 3, then fully tighten screw 4, and then fully tighten screw 3.
10. Connect the heat sink and fan assembly cable to the microprocessor fan connector on the system board. See “Locating parts on the system board” on page 72.

What to do next:

- To work with another piece of hardware, go to the appropriate section.
- To complete the installation or replacement, go to “Completing the parts replacement” on page 156.

Replacing the microprocessor

CAUTION:



The heat sink and microprocessor might be very hot. Before you open the computer cover, turn off the computer and wait several minutes until the computer is cool.

Attention: Do not open your computer or attempt any repair before reading and understanding the Chapter 1 “Safety information” on page 1.

This section provides instructions on how to replace the microprocessor.

To replace the microprocessor, do the following:

1. Remove all media from the drives and turn off all attached devices and the computer. Then, disconnect all power cords from electrical outlets and disconnect all cables that are connected to the computer.
2. Remove the computer cover. See “Removing the computer cover” on page 93.
3. Lay the computer on its side for easier access to the system board.
4. Locate the system board and disconnect all cables connected to the system board.
5. Remove the heat sink and fan assembly. See “Replacing the heat sink and fan assembly” on page 113.

   Note: Place the heat sink and fan assembly on its side so that the thermal grease on the bottom of it does not get in contact with anything.

6. Lift the small handle 1 and open the retainer 2 to access the microprocessor 3.

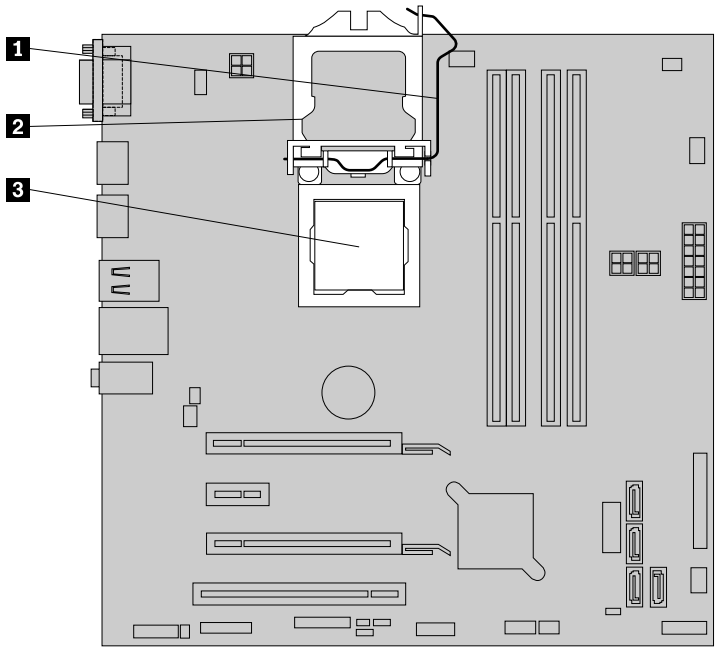

Figure 49. Accessing the microprocessor

7. Lift the microprocessor straight up and out of the microprocessor socket.

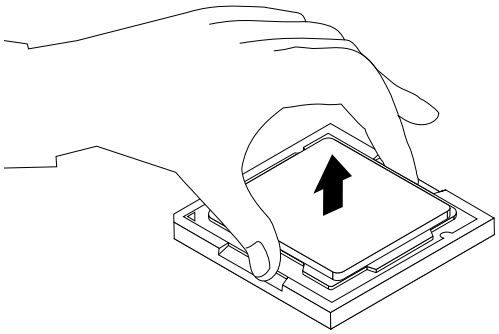

Figure 50. Removing the microprocessor

Notes:

- Your microprocessor and socket might look different from the one illustrated.
- Touch only the edges of the microprocessor. Do not touch the gold contacts on the bottom.
- Do not drop anything onto the microprocessor socket while it is exposed. The socket pins must be kept as clean as possible.

8. Ensure that the small handle is in the raised position and the microprocessor retainer is fully open.
9. Remove the protective cover that protects the gold contacts of the new microprocessor.
10. Note the orientation of the new microprocessor. Hold the new microprocessor by its edges and align the notches 1 on it with the tabs 2 in the microprocessor socket. Then, carefully lower the new microprocessor straight down into the microprocessor socket.

Note: The small triangle 3 on one corner of the new microprocessor is the microprocessor orientation indicator. The new microprocessor is in the correct orientation when this indicator faces the beveled corner 4 of the microprocessor socket.

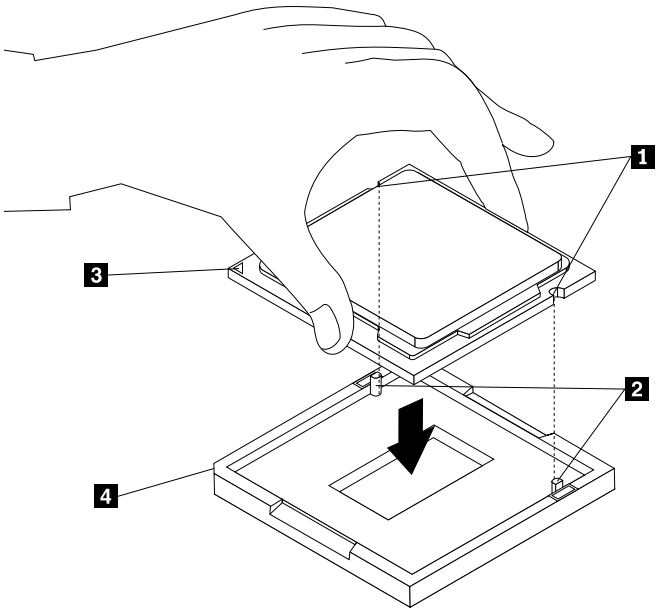

Figure 51. Installing the microprocessor

11. Close the microprocessor retainer and lock it into position with the small handle to secure the new microprocessor in the socket.
12. Reinstall the heat sink and fan assembly. See “Replacing the heat sink and fan assembly” on page 113.
13. Reconnect all cables that were disconnected from the system board.

What to do next:

- To work with another piece of hardware, go to the appropriate section.
- To complete the installation or replacement, go to “Completing the parts replacement” on page 156.

Replacing the system board

Attention: Do not open your computer or attempt any repair before reading and understanding the Chapter 1 “Safety information” on page 1.

This section provides instructions on how to replace the system board.

CAUTION:



The heat sink and microprocessor might be very hot. Before you open the computer cover, turn off the computer and wait several minutes until the computer is cool.

To replace the system board, do the following:

1. Remove all media from the drives and turn off all attached devices and the computer. Then, disconnect all power cords from electrical outlets and disconnect all cables that are connected to the computer.
2. Lay the computer on its side for easier access to the system board.

3. Remove the computer cover. See “Removing the computer cover” on page 93.
4. Remove the front fan assembly from the chassis. See “Replacing the front fan assembly” on page 213.
5. Remove all memory modules and PCI cards that are currently installed. See “Installing or replacing a memory module” on page 98 and “Installing or replacing a PCI card” on page 95.
6. Record the cable routing and cable connections and then disconnect all cables from the system board. “Locating parts on the system board” on page 72.
7. Remove the heat sink and fan assembly from the failing system board. See “Replacing the heat sink and fan assembly” on page 113.
8. Remove the eight screws that secure the system board by following the sequence shown in the following illustration.

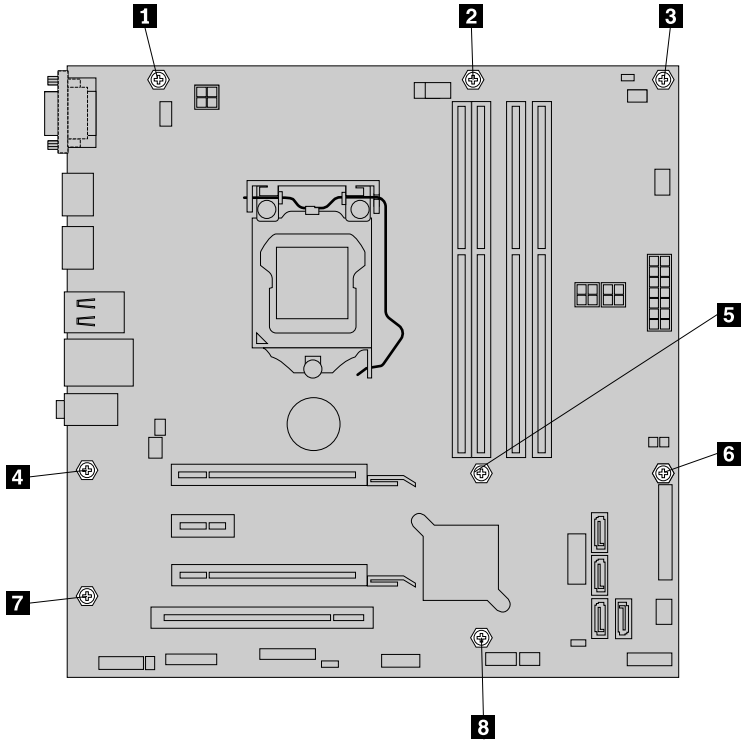

Figure 52. Removing the eight screws that secure the system board

9. Slide the system board to the front of the computer and then carefully lift the system board up out of the chassis.
10. Remove the microprocessor from the failing system board and install it on the new system board. See “Replacing the microprocessor” on page 115.
11. Install the new system board into the chassis by aligning the eight screw holes in the new system board with the corresponding mounting studs on the chassis. Then, install the eight screws to secure the system board by following the sequence shown in the following illustration.

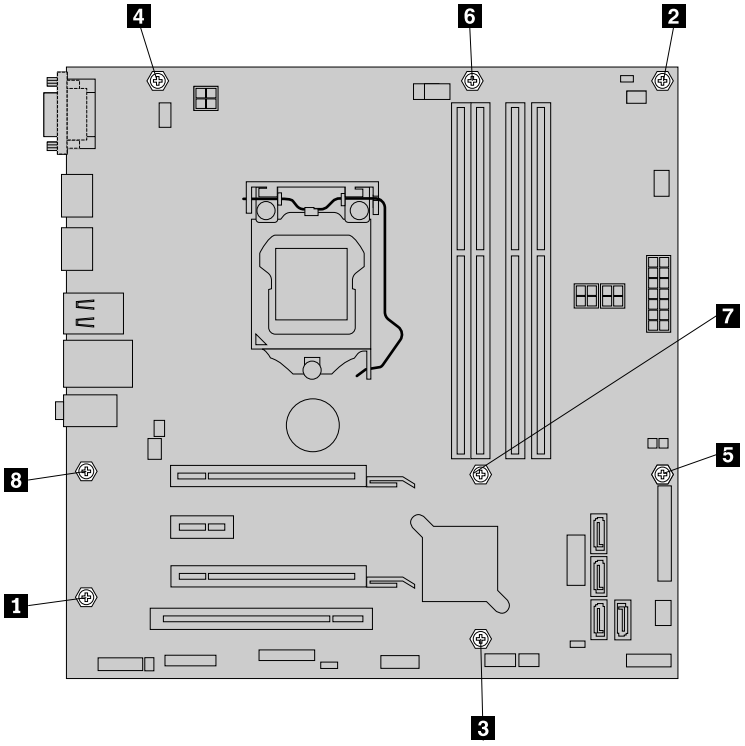

Figure 53. Installing the eight screws to secure the system board

12. Install the heat sink and fan assembly and connect the heat sink and fan assembly cable to the new system board. See “Replacing the heat sink and fan assembly” on page 113.
13. Install all memory modules and PCI cards removed from the failing system board on the new system board. See “Installing or replacing a memory module” on page 98 and “Installing or replacing a PCI card” on page 95.
14. Install the front fan assembly. See “Replacing the front fan assembly” on page 213.
15. Refer to your record to connect cables to the new system board. You also can refer to “Locating parts on the system board” on page 82 to help you locate the connectors on the system board and connect cables.

The failing system board must be returned with a microprocessor socket cover to protect the pins during shipping and handling.

To install the microprocessor socket cover, do the following:

1. After you have removed the microprocessor from the failing system board, close the microprocessor retainer and then put the lever to the locked position to secure the retainer in place.

2. Note the orientation of the socket cover, and install one side of the socket cover into the microprocessor socket. Carefully press the other side of the socket cover downward until the socket cover snaps into position.

   Note: Your microprocessor socket and cover might look slightly different from the illustration.

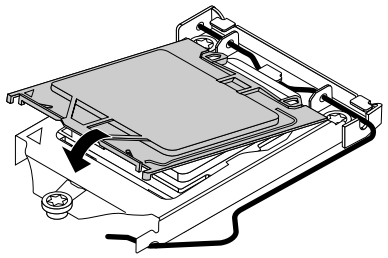

Figure 54. Installing the microprocessor socket cover

3. Carefully check the four corners of the socket cover to ensure that the cover is secured.
4. Follow any additional instructions that are included with the replacement part you received.

What to do next:

- To work with another piece of hardware, go to the appropriate section.
- To complete the installation or replacement, go to "Completing the parts replacement" on page 156.

Installing or replacing the mSATA solid-state drive

Attention: Do not open your computer or attempt any repair before reading and understanding the Chapter 1 "Safety information" on page 1.

This section provides instructions on how to install or replace the mSATA solid-state drive.

Note: The mSATA solid-state drive is only available in some models. For new installation, see "Installing the mSATA solid-state drive" on page 120. For replacement, see "Replacing the mSATA solid-state drive" on page 122.

Installing the mSATA solid-state drive

To install the mSATA solid-state drive, do the following:

1. Insert the mSATA solid-state drive into the mini PCI Express slot on the storage converter, and then press the mSATA solid-state drive downward.

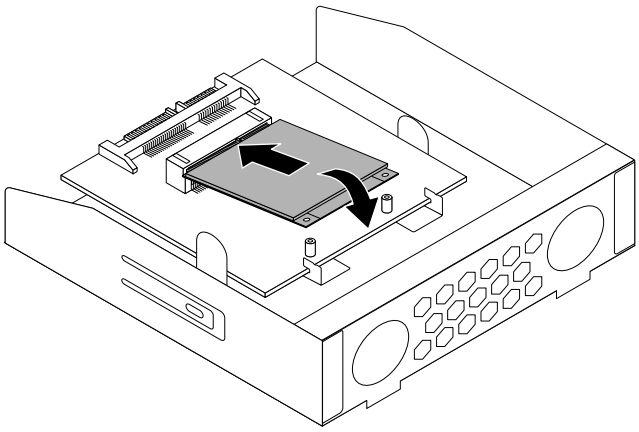

Figure 55. Installing the mSATA solid-state drive into the storage converter

2. Install the two screws to secure the mSATA solid-state drive to the storage converter.

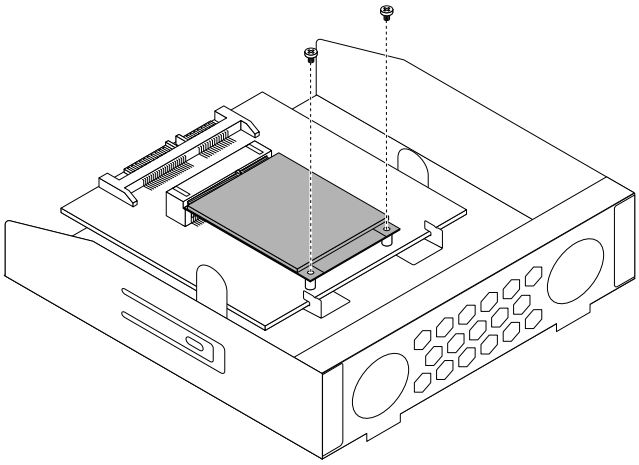

Figure 56. Installing the screws that secure the mSATA solid-state drive

3. Slide the mSATA solid-state drive storage converter into the card reader drive bay until it snaps into position.

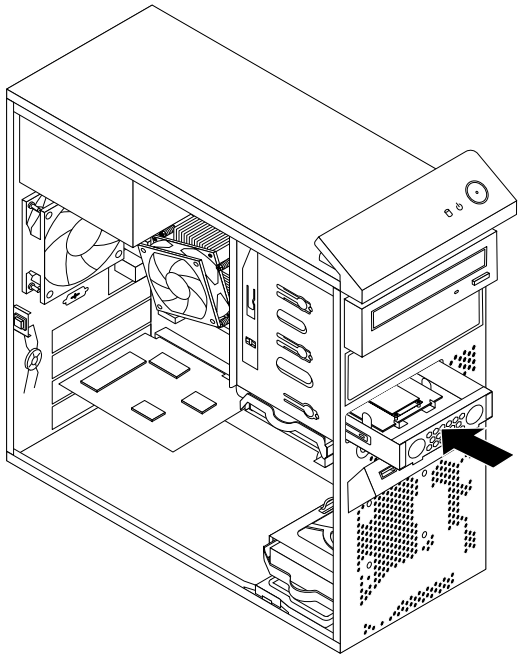

Figure 57. Installing the mSATA solid-state drive

4. Connect the signal cable and the power cable to the mSATA solid-state drive.

What to do next:

- To work with another piece of hardware, go to the appropriate section.
- To complete the installation or replacement, go to “Completing the parts replacement” on page 156.

Replacing the mSATA solid-state drive

To replace the mSATA solid-state drive, do the following:

1. Remove all media from the drives and turn off all attached devices and the computer. Then, disconnect all power cords from electrical outlets and disconnect all cables that are connected to the computer.
2. Remove the computer cover. See “Removing the computer cover” on page 93.
3. Remove the front bezel. See “Removing and reinstalling the front bezel” on page 94.
4. Locate the card reader. See “Locating major FRUs and CRUs” on page 70.
5. Disconnect the signal cable and power cable from the mSATA solid-state drive.

6. Press the blue retaining clip to remove the mSATA solid-state drive storage converter out of the chassis.

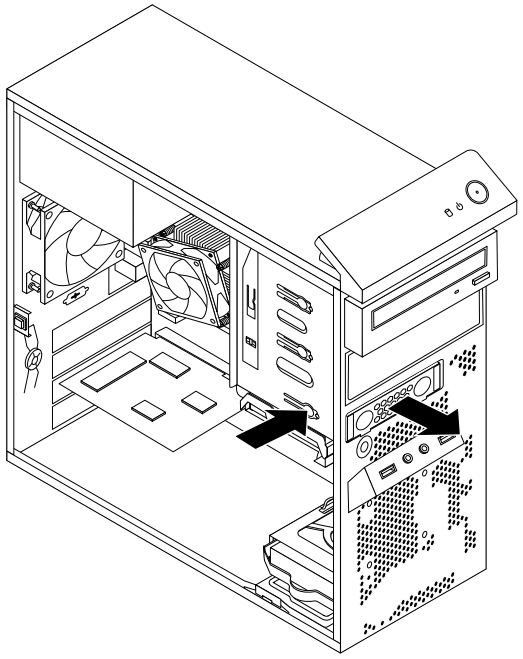

Figure 58. Removing the mSATA solid-state drive storage converter

7. Remove the two screws that secure the mSATA solid-state drive from the storage converter.

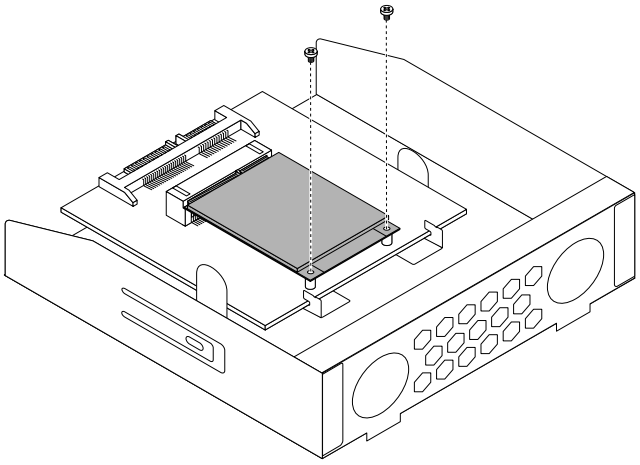

Figure 59. Removing the screws that secure the mSATA solid-state drive

8. Pull the mSATA solid-state drive from the mini PCI Express slot on the storage converter.

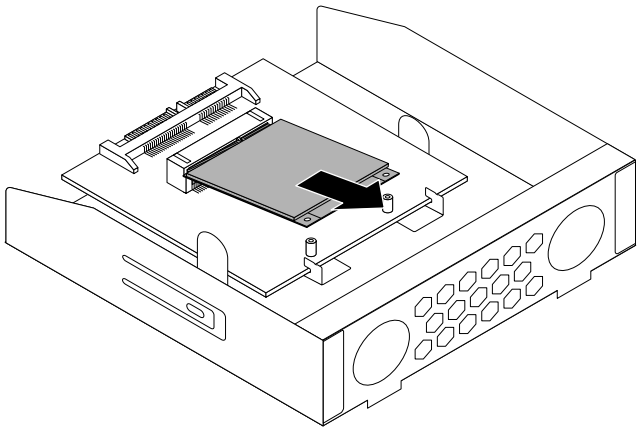

Figure 60. Removing the mSATA solid-state drive

9. To install a new mSATA solid-state drive, insert the mSATA solid-state drive into the mini PCI Express slot on the storage converter, and then press the mSATA solid-state drive downward.

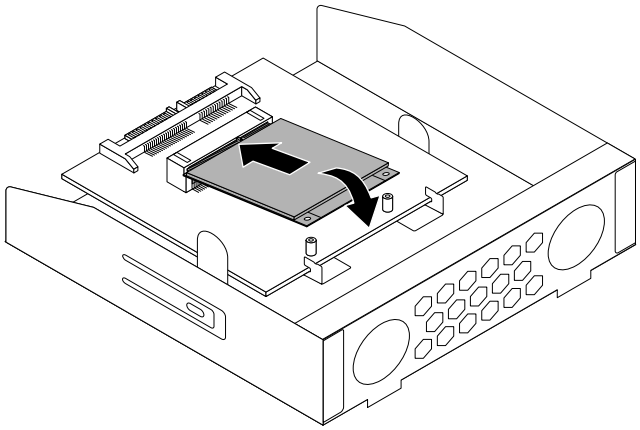

Figure 61. Installing the mSATA solid-state drive into the storage converter

10. Install the two screws to secure the mSATA solid-state drive to the storage converter.

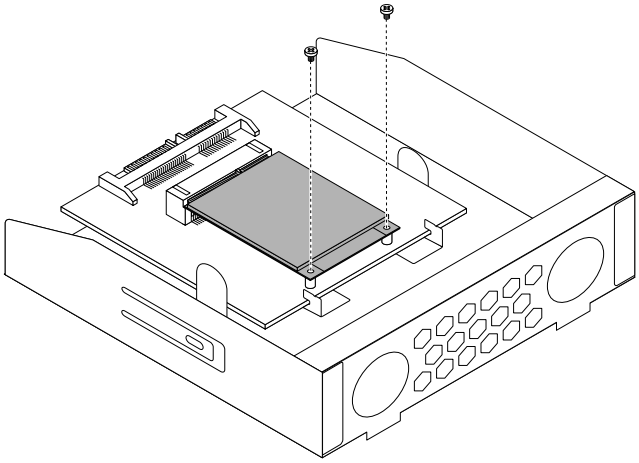

Figure 62. Installing the screws that secure the mSATA solid-state drive

11. Slide the mSATA solid-state drive storage converter into the card reader drive bay until it snaps into position.

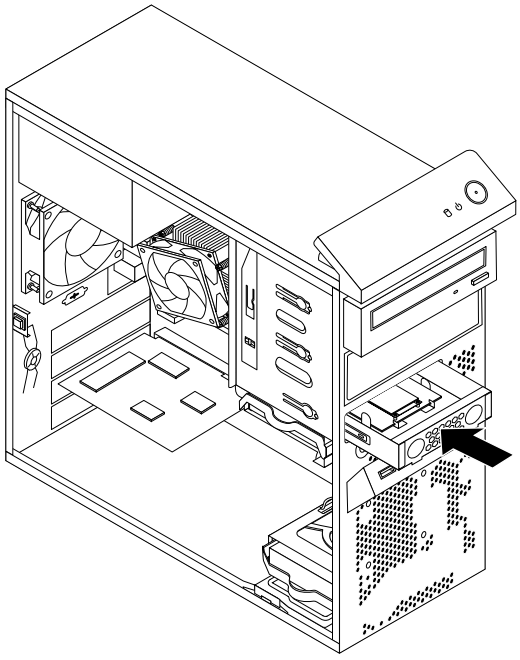

Figure 63. Installing the mSATA solid-state drive

12. Connect the signal cable and the power cable to the mSATA solid-state drive.

What to do next:

- To work with another piece of hardware, go to the appropriate section.
- To complete the installation or replacement, go to “Completing the parts replacement” on page 156.

Replacing the primary hard disk drive

Attention: Do not open your computer or attempt any repair before reading and understanding the Chapter 1 “Safety information” on page 1.

This section provides instructions on how to replace the primary hard disk drive.

Note: Depending on your model type, your computer might come with a 2.5-inch solid-state drive. To install the solid-state drive, see “Installing the solid-state drive” on page 130

To replace the primary hard disk drive, do the following:

1. Remove all media from the drives and turn off all attached devices and the computer. Then, disconnect all power cords from electrical outlets and disconnect all cables that are connected to the computer.
2. Remove the computer cover. See “Removing the computer cover” on page 93.
3. Locate the primary hard disk drive. See “Locating major FRUs and CRUs” on page 70.
4. Disconnect the signal cable and the power cable from the hard disk drive.
5. Pull the blue handle to release and remove the hard disk drive from the bracket.

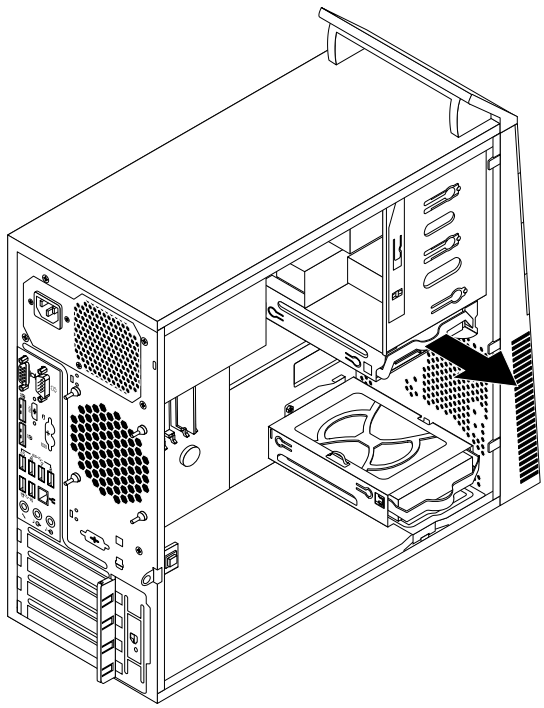

Figure 64. Removing the primary hard disk drive

6. Flex the sides of the blue bracket to remove the hard disk drive from the bracket.

7. To install a new hard disk drive into the blue bracket, flex the bracket and align pin 1, pin 2, pin 3, and pin 4 on the bracket with the corresponding holes in the hard disk drive. Do not touch the circuit board 5 on the bottom of the hard disk drive.

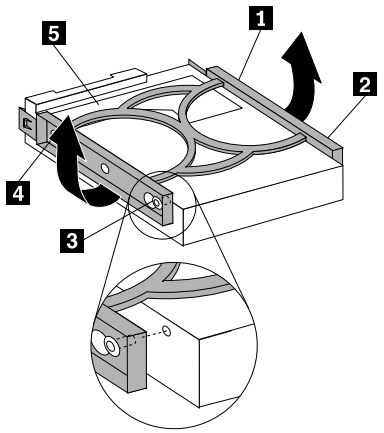

Figure 65. Installing the hard disk drive into the bracket

8. Slide the new hard disk drive into the bracket until it snaps into position.

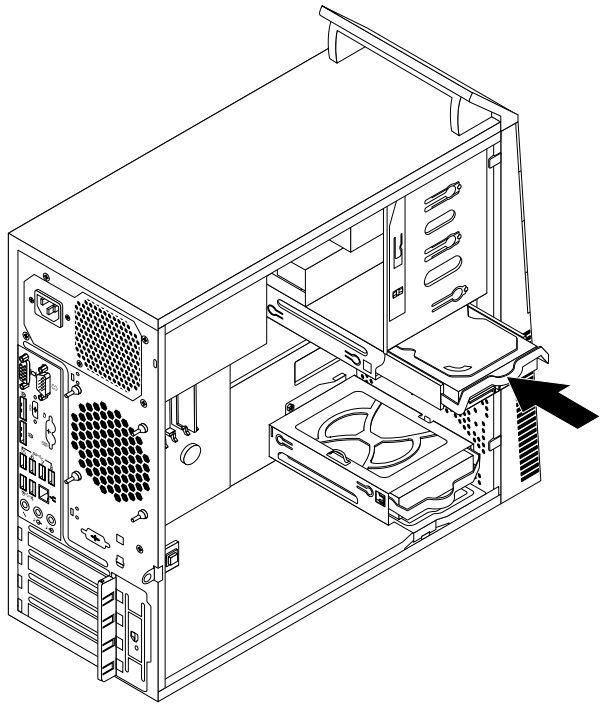

Figure 66. Installing the primary hard disk drive

9. Connect the signal cable and the power cable to the new hard disk drive.

What to do next:

- To work with another piece of hardware, go to the appropriate section.
- To complete the installation or replacement, go to “Completing the parts replacement” on page 156.

Replacing the secondary hard disk drive

Attention: Do not open your computer or attempt any repair before reading and understanding the Chapter 1 “Safety information” on page 1.

Note: Your computer comes with a secondary hard disk drive bay for installing or replacing a secondary 3.5-inch hard disk drive or a 2.5-inch solid-state drive. To install the solid-state drive, see “Installing the mSATA solid-state drive” on page 120

This section provides instructions on how to replace the secondary hard disk drive.

To replace the secondary hard disk drive, do the following:

1. Remove all media from the drives and turn off all attached devices and the computer. Then, disconnect all power cords from electrical outlets and disconnect all cables that are connected to the computer.
2. Remove the computer cover. See “Removing the computer cover” on page 93.
3. Remove the front bezel. See “Removing and reinstalling the front bezel” on page 94.
4. Disconnect the signal cable and the power cable from the hard disk drive.
5. Pull the blue handle to release and remove the hard disk drive from the hard disk bracket.

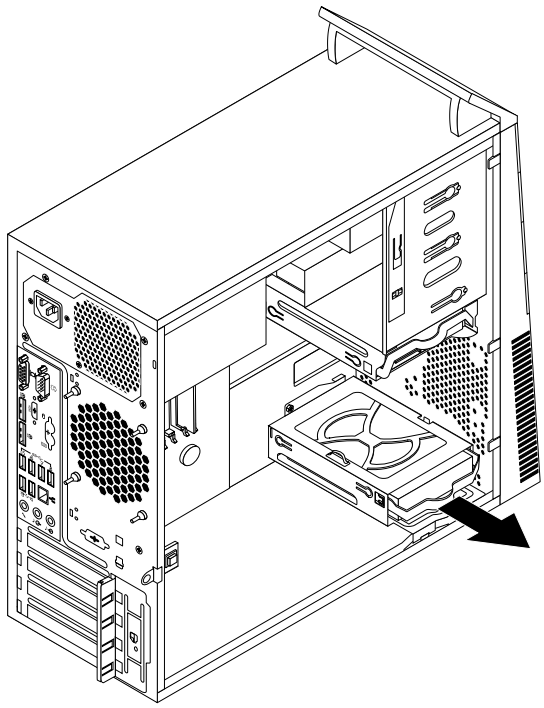

Figure 67. Removing the secondary hard disk drive

6. Flex the sides of the blue bracket to remove the hard disk drive from the bracket.

7. To install a new hard disk drive into the blue bracket, flex the bracket and align pin 1, pin 2, pin 3, and pin 4 on the bracket with the corresponding holes in the hard disk drive. Do not touch the circuit board 5 on the bottom of the hard disk drive.

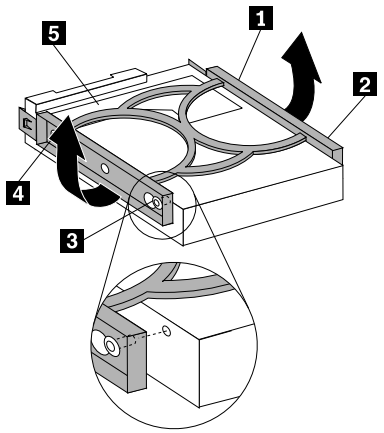

Figure 68. Installing the hard disk drive into the bracket

8. Slide the new hard disk drive into the hard disk bracket until it snaps into position.

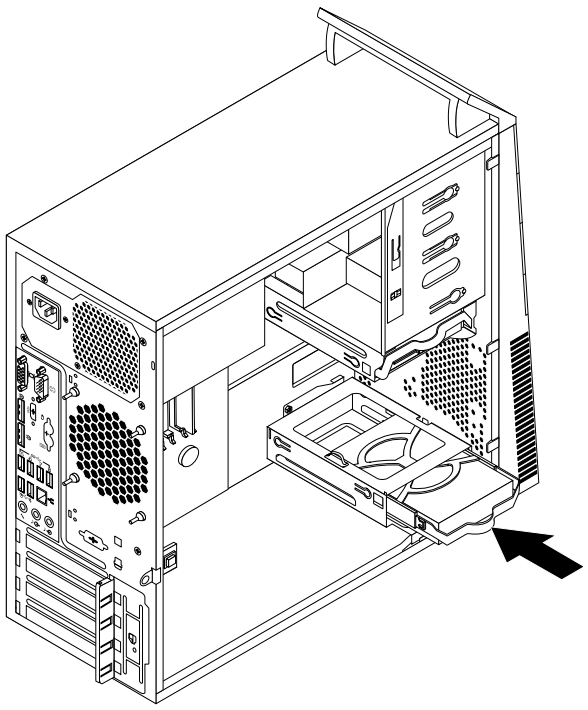

Figure 69. Installing the secondary hard disk drive

9. Connect the signal cable and the power cable to the new hard disk drive.

What to do next:

- To work with another piece of hardware, go to the appropriate section.
- To complete the installation or replacement, go to “Completing the parts replacement” on page 156.

Installing the solid-state drive

Attention: Do not open your computer or attempt any repair before reading and understanding the Chapter 1 “Safety information” on page 1.

This section provides instructions on how to install the 2.5-inch solid-state drive.

To install the solid-state drive, do the following:

1. Install the solid-state drive into the storage converter. Then, install the four screws to secure the solid-state drive to the storage converter.

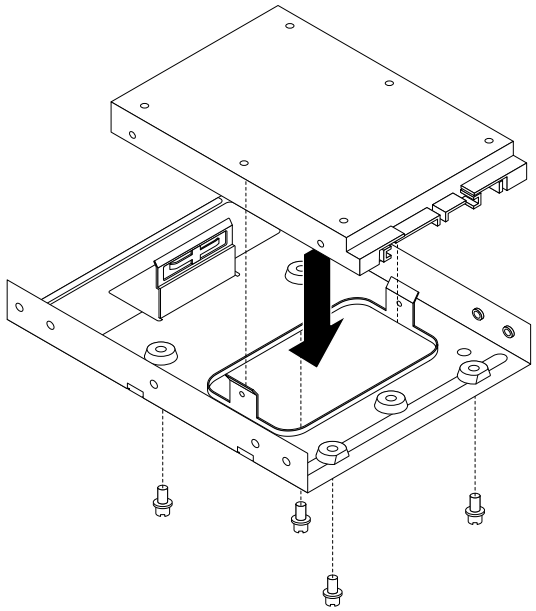

Figure 70. Installing the solid-state drive into the storage converter

2. To install the solid-state drive with the storage converter into the 3.5-inch hard disk drive bracket, flex the bracket and align pin 1, pin 2, pin 3, and pin 4 on the bracket with the corresponding holes in the storage converter.

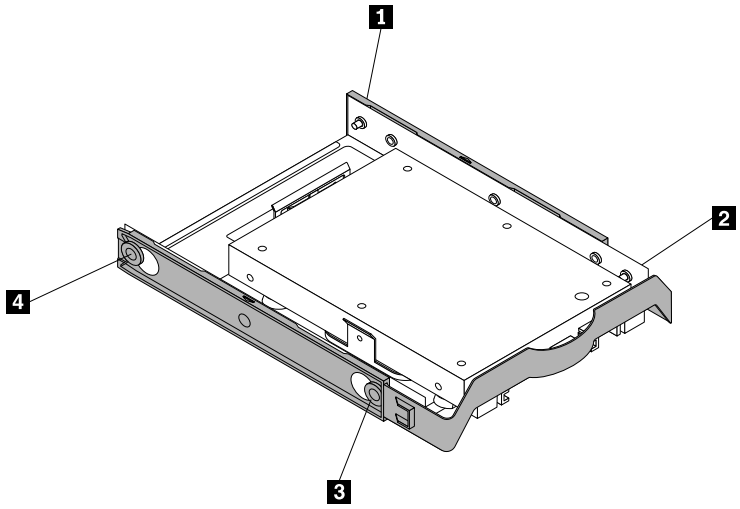

Figure 71. Installing the solid-state drive with the storage converter into the hard disk drive bracket

3. Install the solid-state drive into the desired hard disk drive bay. See “Replacing the primary hard disk drive” on page 126 or “Replacing the secondary hard disk drive” on page 128.

What to do next:

- To work with another piece of hardware, go to the appropriate section.
- To complete the installation or replacement, go to “Completing the parts replacement” on page 156.

Replacing the front fan assembly

Attention: Do not open your computer or attempt any repair before reading and understanding the Chapter 1 “Safety information” on page 1.

This section provides instructions on how to replace the front fan assembly.

Note: The front fan assembly is only available in some models.

To replace the front fan assembly, do the following:

1. Remove all media from the drives and turn off all attached devices and the computer. Then, disconnect all power cords from electrical outlets and disconnect all cables that are connected to the computer.
2. Remove the computer cover. See “Removing the computer cover” on page 93.
3. Disconnect the front fan assembly cable from the power fan connector on the system board. See “Locating parts on the system board” on page 72.

4. The front fan assembly is attached to the chassis by four rubber mounts. Remove the front fan assembly by breaking or cutting the rubber mounts and gently pulling the front fan assembly out of the chassis.

   Note: The new front fan assembly will have four new rubber mounts attached.

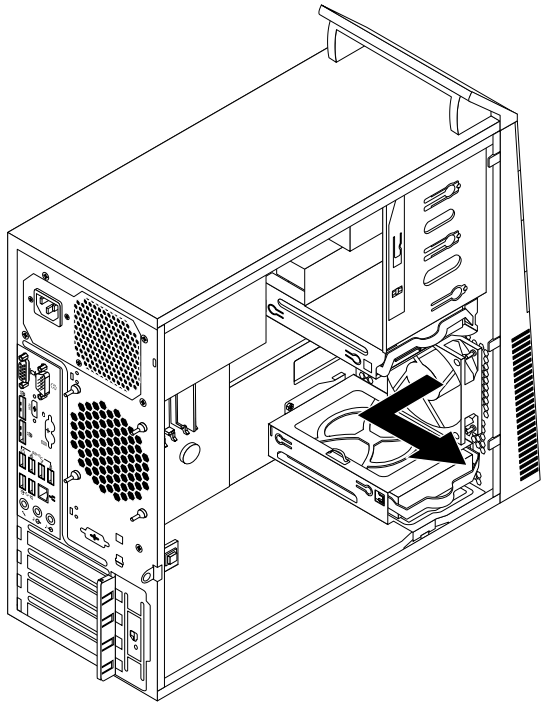

Figure 72. Removing the front fan assembly

5. Remove the front bezel. See “Removing and reinstalling the front bezel” on page 94.
6. Install the new front fan assembly by aligning the new rubber mounts with the corresponding holes in the chassis and push the rubber mounts through the holes.

7. Pull the tips of the rubber mounts until the front fan assembly is secured in place.

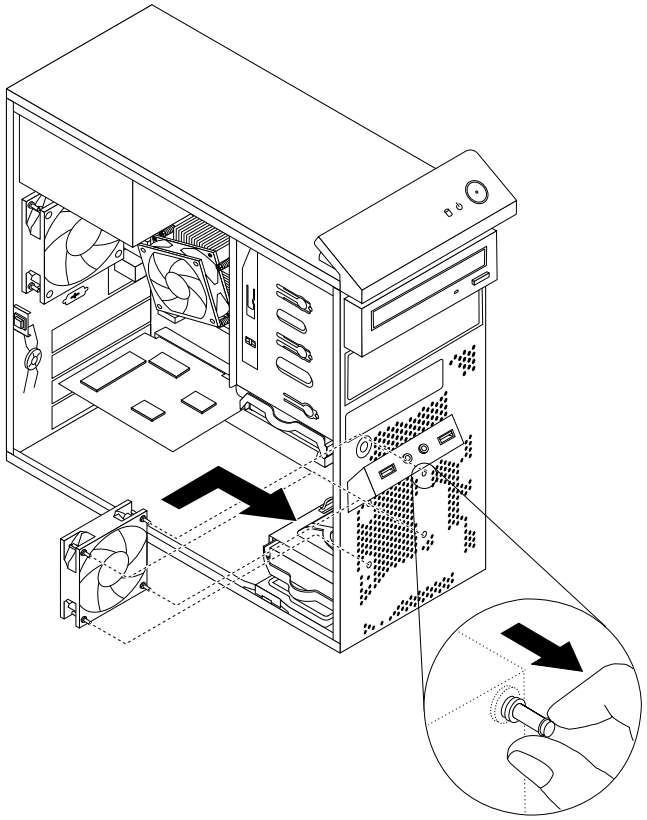

Figure 73. Installing the front fan assembly

8. Connect the front fan assembly cable to the power fan connector on the system board.
9. Reinstall the front bezel. See “Removing and reinstalling the front bezel” on page 94.

What to do next:

- To work with another piece of hardware, go to the appropriate section.
- To complete the installation or replacement, go to “Completing the parts replacement” on page 156.

Replacing the rear fan assembly

Attention: Do not open your computer or attempt any repair before reading and understanding the Chapter 1 “Safety information” on page 1.

This section provides instructions on how to replace the rear fan assembly.

To replace the rear fan assembly, do the following:

1. Remove all media from the drives and turn off all attached devices and the computer. Then, disconnect all power cords from electrical outlets and disconnect all cables that are connected to the computer.
2. Remove the computer cover. See “Removing the computer cover” on page 93.
3. Locate the rear fan assembly. See “Locating major FRUs and CRUs” on page 70.
4. Disconnect the rear fan assembly cable from the system fan connector on the system board. See “Locating parts on the system board” on page 72.

5. The rear fan assembly is attached to the chassis by four rubber mounts. Remove the rear fan assembly by breaking or cutting the rubber mounts and gently pulling the rear fan assembly out of the chassis.

   Note: The new rear fan assembly will have four new rubber mounts attached.

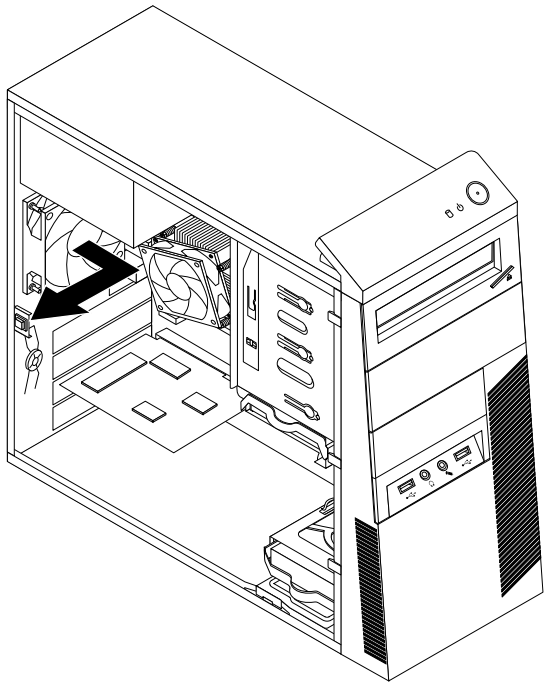

Figure 74. Removing the rear fan assembly

6. Install the new rear fan assembly by aligning the new rubber mounts with the corresponding holes in the chassis and push the rubber mounts through the holes.

7. Pull on the tips of the rubber mounts until the rear fan assembly is secured in place.

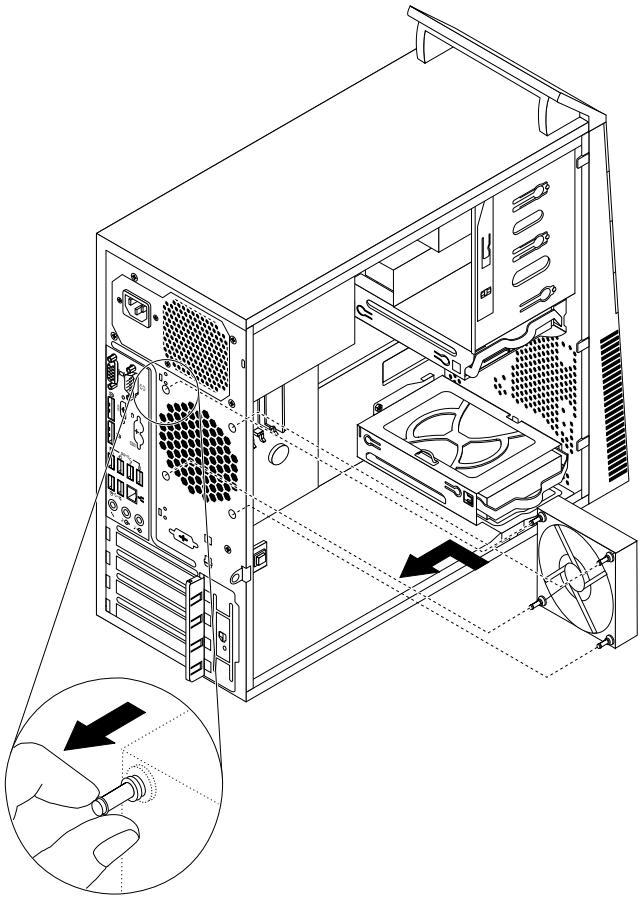

Figure 75. Installing the rear fan assembly

8. Connect the rear fan assembly cable to the system fan connector on the system board.

What to do next:

- To work with another piece of hardware, go to the appropriate section.
- To complete the installation or replacement, go to "Completing the parts replacement" on page 156.

Replacing the front audio and USB assembly

Attention: Do not open your computer or attempt any repair before reading and understanding the Chapter 1 "Safety information" on page 1.

This section provides instructions on how to replace the front audio and USB assembly.

To replace the front audio and USB assembly, do the following:

1. Remove all media from the drives and turn off all attached devices and the computer. Then, disconnect all power cords from electrical outlets and disconnect all cables that are connected to the computer.
2. Remove the computer cover. See "Removing the computer cover" on page 93.
3. Remove the front bezel. See "Removing and reinstalling the front bezel" on page 94.
4. Locate the front audio and USB assembly. See "Locating major FRUs and CRUs" on page 70.

5. Note the cable routing and connections. Then, disconnect the front audio and USB assembly cables from the system board.
6. Remove the screw that secures the front audio and USB assembly. Then, remove the front audio and USB assembly from the chassis.

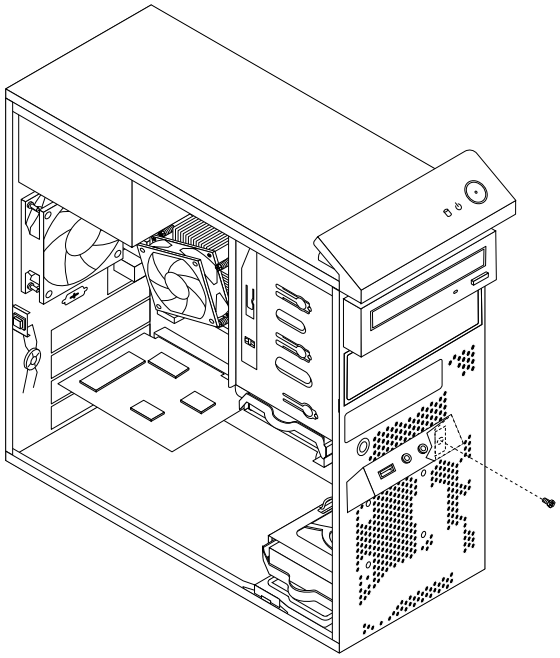

Figure 76. Removing the front audio and USB assembly

7. Route the cables of the new front audio and USB assembly through the corresponding square hole in the front of the chassis. Then position the new front audio and USB assembly on the chassis as shown.

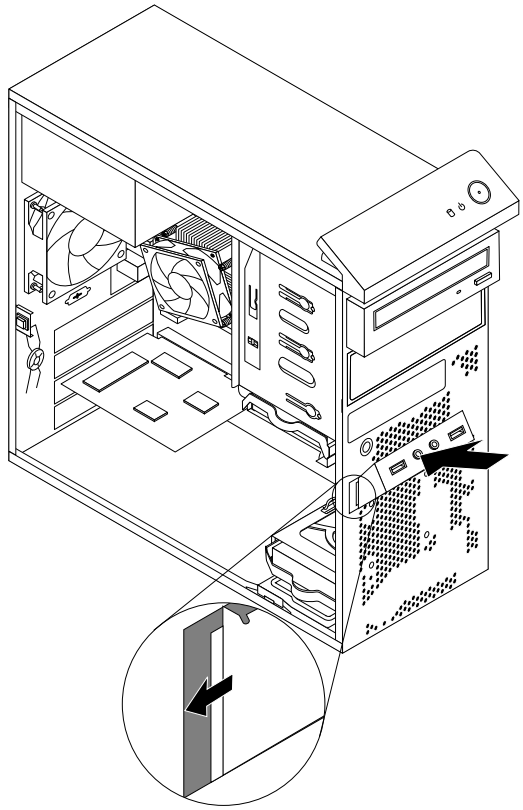

Figure 77. Installing the front audio and USB assembly

8. Install the screw to secure the new front audio and USB assembly in place.

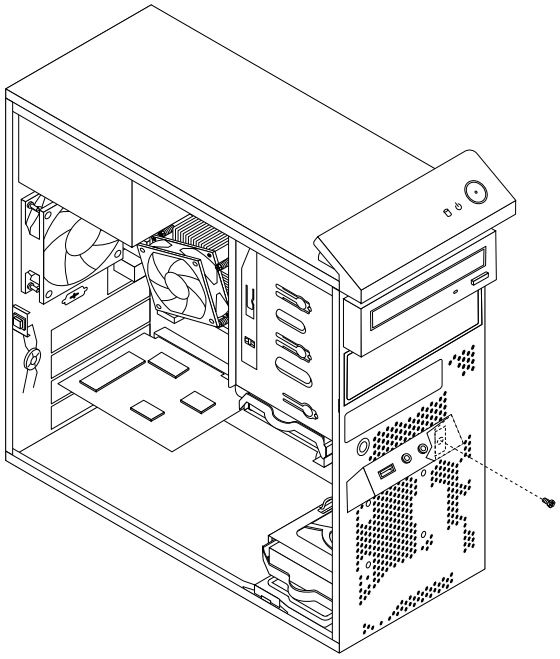

Figure 78. Installing the screw to secure the front audio and USB assembly

9. Connect the cables of the new front audio and USB assembly to the front audio connector and the front USB connector 1 on the system board. See “Locating parts on the system board” on page 72.

What to do next:

- To work with another piece of hardware, go to the appropriate section.
- To complete the installation or replacement, go to “Completing the parts replacement” on page 156.

Replacing the internal speaker

Attention: Do not open your computer or attempt any repair before reading and understanding the Chapter 1 “Safety information” on page 1.

This section provides instructions on how to replace the internal speaker.

Note: The internal speaker is only available in some models.

To replace the internal speaker, do the following:

1. Remove all media from the drives and turn off all attached devices and the computer. Then, disconnect all power cords from electrical outlets and disconnect all cables that are connected to the computer.
2. Remove the computer cover. See “Removing the computer cover” on page 93.
3. Locate the internal speaker connector on the system board. See “Locating parts on the system board” on page 72.
4. Disconnect the internal speaker cable from the system board.

5. Push the metal tab **1** on the right side of the internal speaker and slide the internal speaker toward the right to completely remove it from the chassis.

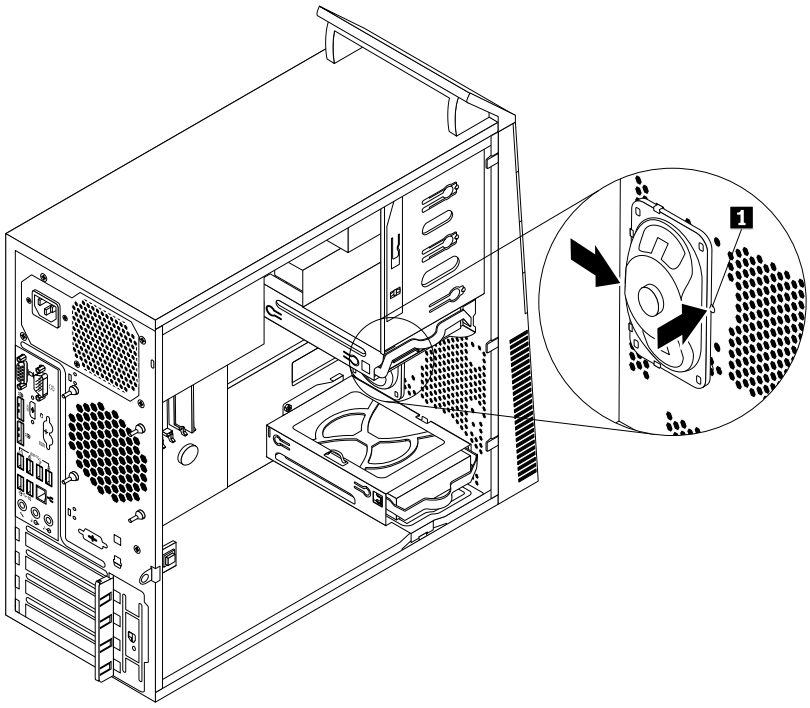

Figure 79. Removing the old internal speaker

6. Position the new internal speaker into the four metal clips **1** and push the internal speaker toward the left until it is secured in place.

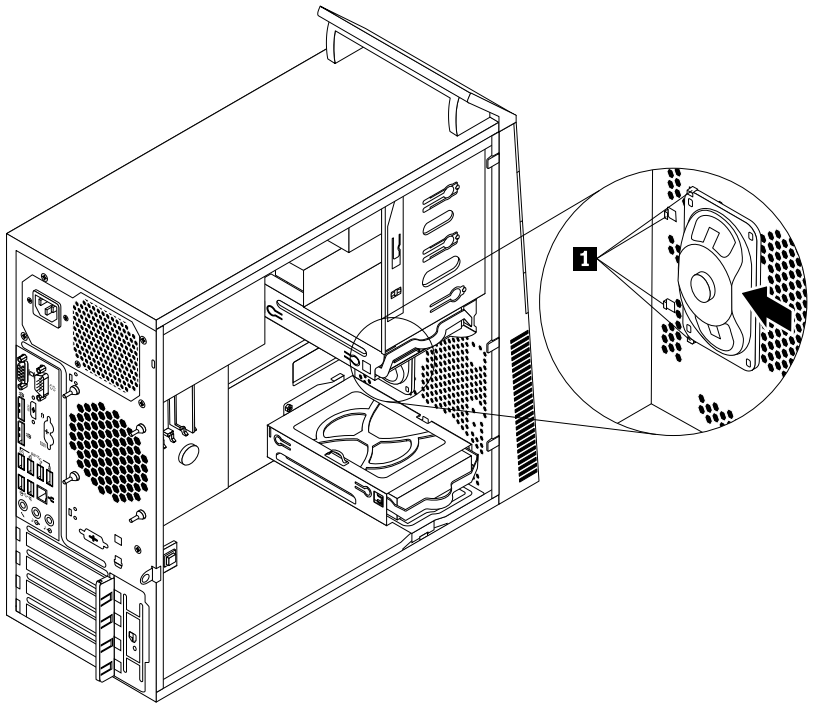

Figure 80. Installing a new internal speaker

7. Connect the internal speaker cable to the system board. See “Locating parts on the system board” on page 72.

What to do next:

- To work with another piece of hardware, go to the appropriate section.
- To complete the installation or replacement, go to “Completing the parts replacement” on page 156.

Replacing the thermal sensor

Attention: Do not open your computer or attempt any repair before reading and understanding the Chapter 1 “Safety information” on page 1.

This section provides instructions on how to replace the thermal sensor.

To replace the thermal sensor, do the following:

1. Remove all media from the drives and turn off all attached devices and the computer. Then, disconnect all power cords from electrical outlets and disconnect all cables that are connected to the computer.
2. Remove the computer cover. See “Removing the computer cover” on page 93.
3. Remove the front bezel. See “Removing and reinstalling the front bezel” on page 94.
4. Locate the thermal sensor. See “Locating major FRUs and CRUs” on page 70.
5. Disconnect the thermal sensor cable from the thermal sensor connector on the system board. See “Locating parts on the system board” on page 72.

6. From inside the chassis, pivot the upper retaining clip **1** that secures the plastic holder of the thermal sensor downward and then push the clip outward to release the clip. Then disengage the plastic holder holding the thermal sensor from the chassis.

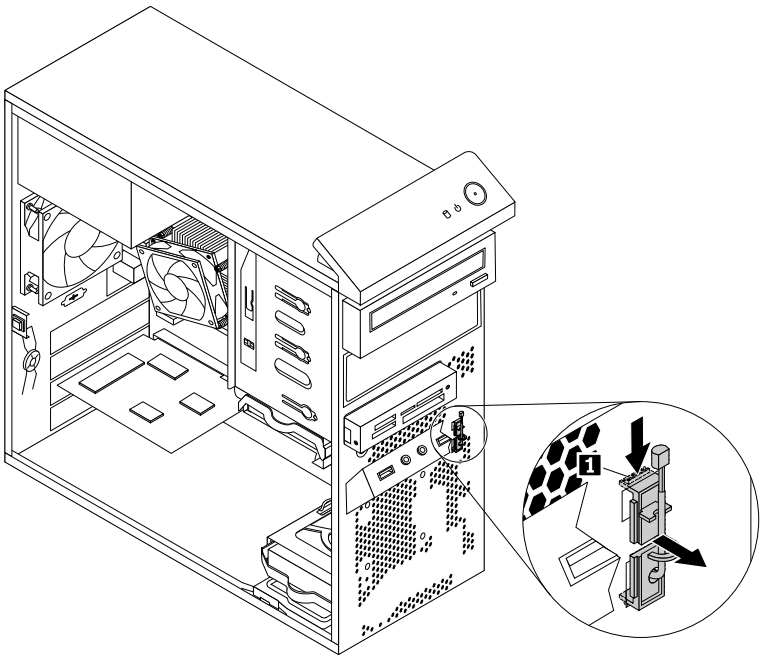

Figure 81. Removing the thermal sensor

7. Pull the entire thermal sensor out of the chassis.

8. Insert the connector and cable of the new thermal sensor into the lower hole 1 in the chassis. Then align the two tabs on the plastic holder holding the thermal sensor with the two holes 1 and 2 in the chassis, and push the plastic holder until it snaps into position.

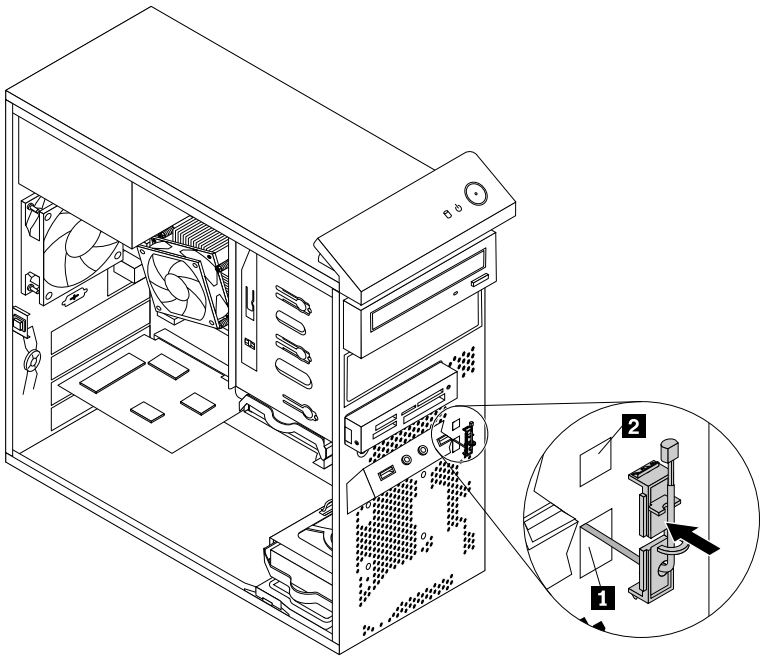

Figure 82. Installing the new thermal sensor

9. Reconnect the thermal sensor cable to the system board. See "Locating parts on the system board" on page 72.
10. Reinstall the front bezel. See "Removing and reinstalling the front bezel" on page 94.

What to do next:

- To work with another piece of hardware, go to the appropriate section.
- To complete the installation or replacement, go to "Completing the parts replacement" on page 156.

Replacing the cover presence switch

Attention: Do not open your computer or attempt any repair before reading and understanding the Chapter 1 "Safety information" on page 1.

This section provides instructions on how to replace the cover presence switch (intrusion switch).

To replace the cover presence switch, do the following:

1. Remove all media from the drives and turn off all attached devices and the computer. Then, disconnect all power cords from electrical outlets and disconnect all cables that are connected to the computer.
2. Remove the computer cover. See "Removing the computer cover" on page 93.
3. Locate the cover presence switch. See "Locating major FRUs and CRUs" on page 70.
4. Disconnect the cover presence switch cable from the cover presence switch connector on the system board. See "Locating parts on the system board" on page 72.

5. Remove the screw that secures the cover presence switch and remove the cover presence switch from the chassis.

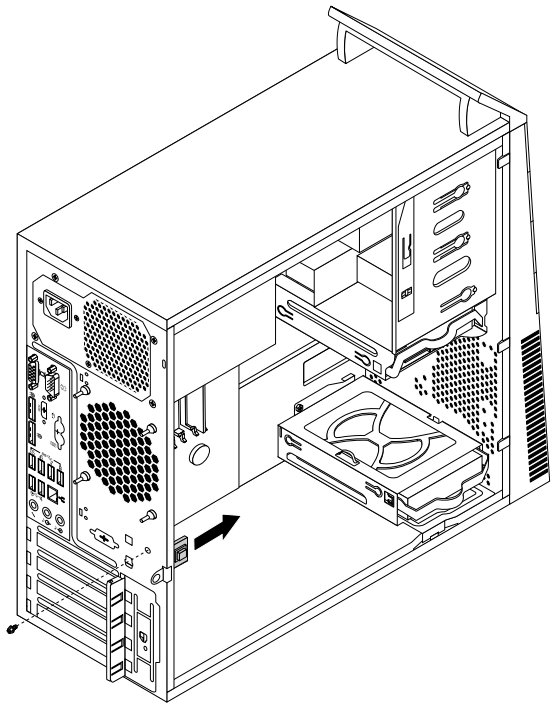

Figure 83. Removing the cover presence switch

6. Position the new cover presence switch so that the screw hole in the cover presence switch is aligned with the corresponding hole in the chassis. Then install the screw to secure the cover presence switch to the chassis.

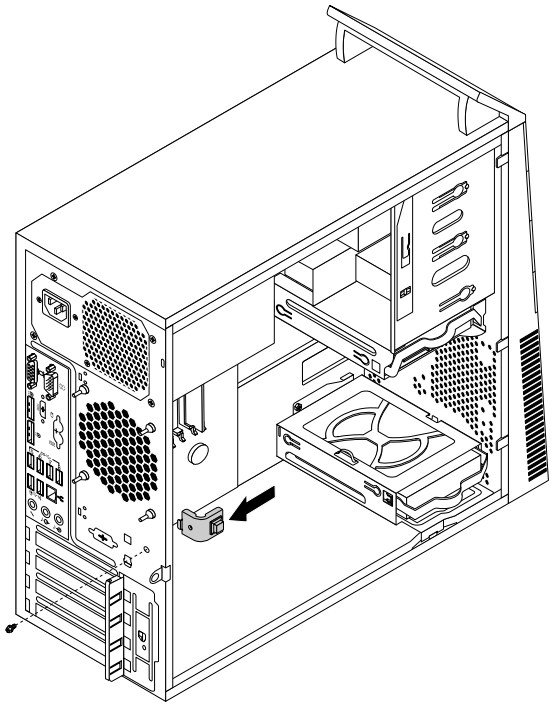

Figure 84. Installing the new cover presence switch

7. Reconnect the cover presence switch cable to the system board. See “Locating parts on the system board” on page 72.
8. Reinstall the front bezel. See “Removing and reinstalling the front bezel” on page 94.

What to do next:

- To work with another piece of hardware, go to the appropriate section.
- To complete the installation or replacement, go to “Completing the parts replacement” on page 156.

Replacing the Wi-Fi units

Attention: Do not open your computer or attempt any repair before reading and understanding the Chapter 1 “Safety information” on page 1.

This section provides instructions on how to replace the Wi-Fi units. The Wi-Fi units include a Wi-Fi adapter card, a Wi-Fi card module, and a rear Wi-Fi antenna cable.

Replacing the Wi-Fi units involves the following operations:

- “Removing the Wi-Fi adapter card” on page 145
- “Removing the Wi-Fi card module” on page 147
- “Installing the Wi-Fi units” on page 149

Removing the Wi-Fi adapter card

To remove a Wi-Fi adapter card, do the following:

1. Remove all media from the drives and turn off all attached devices and the computer. Then, disconnect all power cords from electrical outlets and disconnect all cables that are connected to the computer.
2. Remove the computer cover. See “Removing the computer cover” on page 93.
3. If your computer comes with a Wi-Fi card module that supports the Bluetooth function, disconnect the Bluetooth cable from the Wi-Fi adapter card.

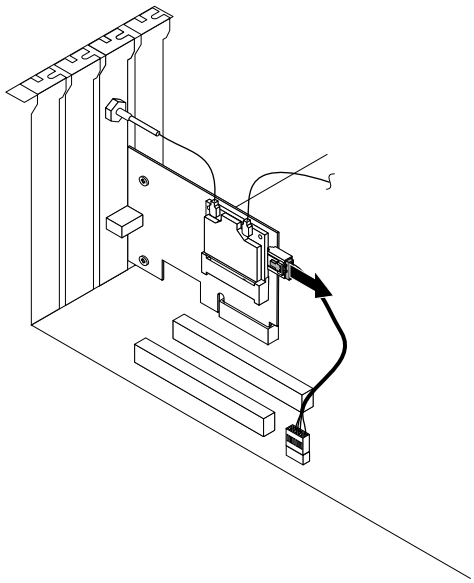

Figure 85. Disconnecting the Bluetooth cable

Note: The Bluetooth cable connects the Bluetooth connector on the Wi-Fi adapter card to the front USB connector on the system board to support the Bluetooth function.

4. At the rear of the computer, press the release button **1** to open the PCI card latch **2**.

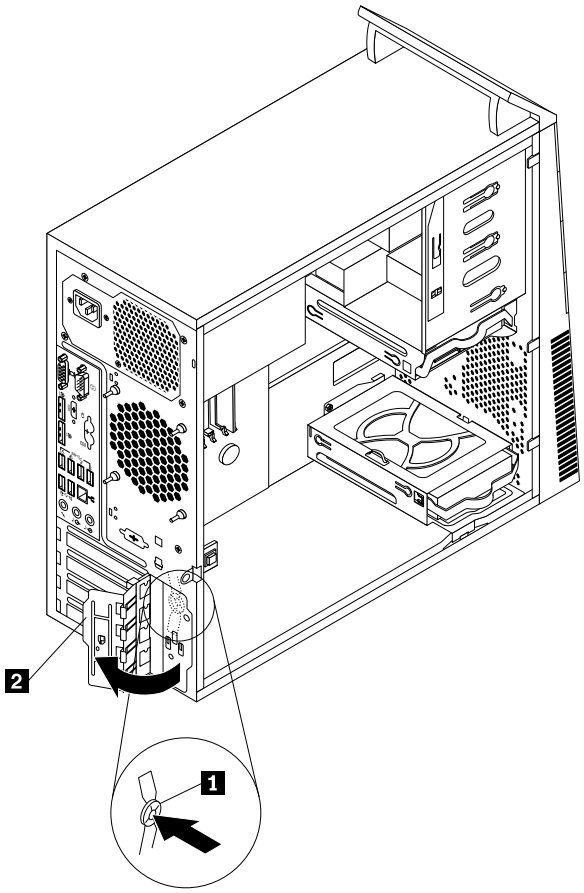

Figure 86. Opening the PCI card latch

5. Grasp the Wi-Fi adapter card that is currently installed and gently pull it out of the slot.

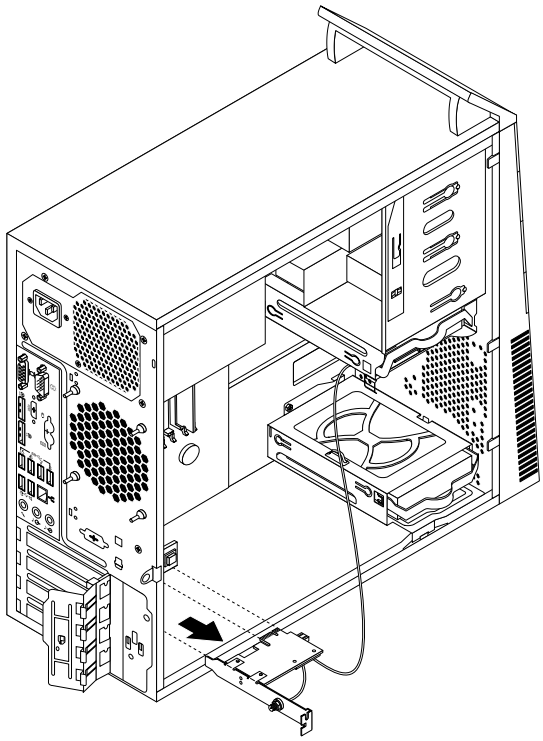

Figure 87. Removing the Wi-Fi adapter card

Note: The card fits tightly into the card slot. If necessary, alternate moving each side of the card a small amount until it is removed from the card slot.

What to do next:

- To work with another piece of hardware, go to the appropriate section.
- To complete the installation or replacement, go to “Completing the parts replacement” on page 156.

Removing the Wi-Fi card module

To remove the Wi-Fi card module, do the following:

1. Remove the Wi-Fi adapter card from the computer, and then disconnect the front and rear Wi-Fi antenna cables from the Wi-Fi card module.

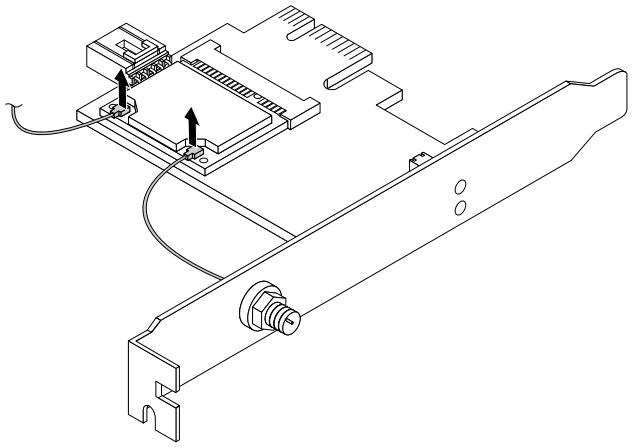

Figure 88. Removing the Wi-Fi antenna cables

2. Remove the two screws that secure the Wi-Fi card module to the Wi-Fi adapter card.

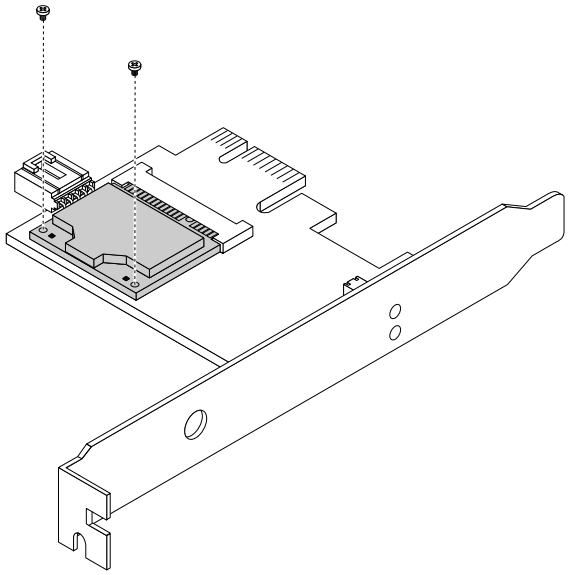

Figure 89. Removing the screws that secure the Wi-Fi card module

3. Pull the Wi-Fi card module out of the mini PCI Express slot to remove it from the Wi-Fi adapter card.

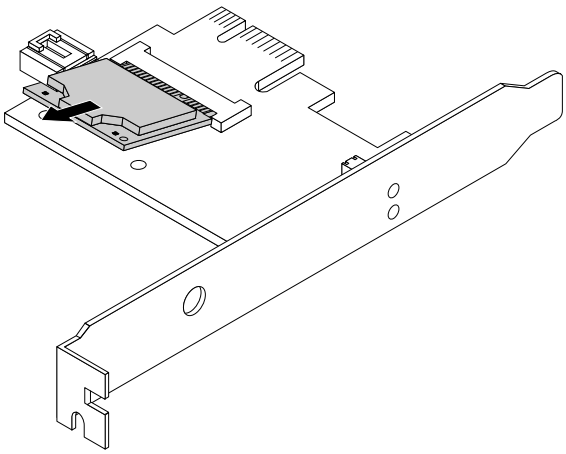

Figure 90. Removing the Wi-Fi card module

What to do next:

- To work with another piece of hardware, go to the appropriate section.
- To complete the installation or replacement, go to “Completing the parts replacement” on page 156.

Installing the Wi-Fi units

To install the Wi-Fi units, do the following:

1. Insert the Wi-Fi card module into the mini PCI Express slot, and then install the two screws to secure the Wi-Fi card module to the Wi-Fi adapter card.

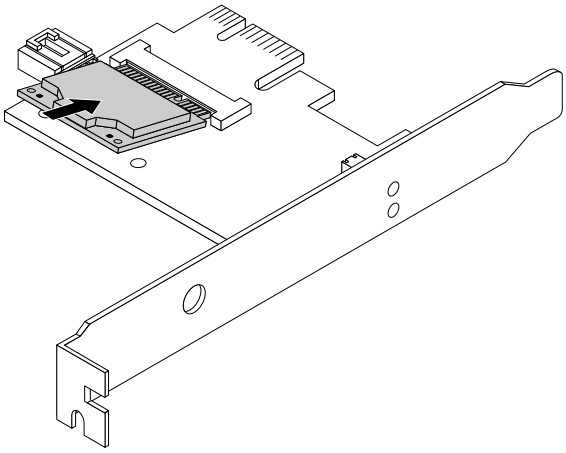

Figure 91. Installing the Wi-Fi card module

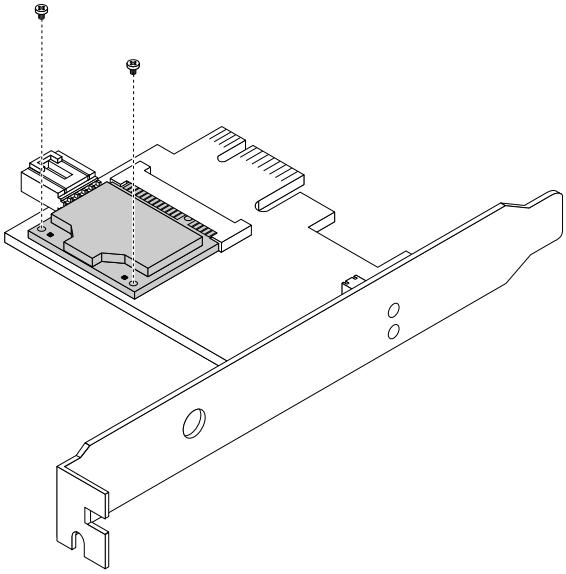

Figure 92. Installing the screws that secure the Wi-Fi card module

2. Connect the front antenna cable and rear antenna cable to the Wi-Fi card module.

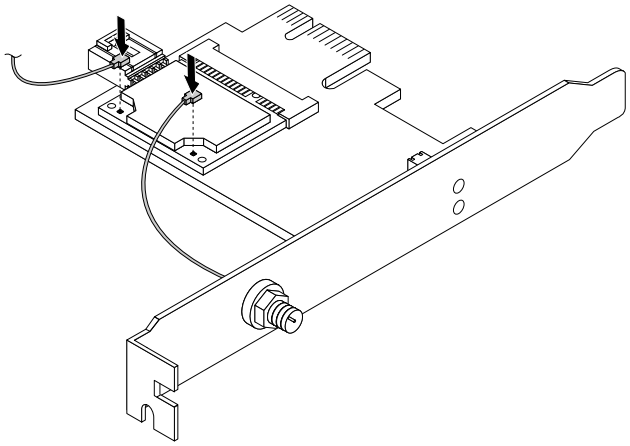

Figure 93. Installing the Wi-Fi antenna cables

3. Install the Wi-Fi adapter card into the PCI Express x1 slot on the system board. See “Locating parts on the system board” on page 72.
4. If the installed Wi-Fi card module supports the Bluetooth function, use a Bluetooth cable to connect the Bluetooth connector on the Wi-Fi adapter card to the front USB connector on the system board.
5. Pivot the card latch to the closed position to secure the Wi-Fi adapter card.

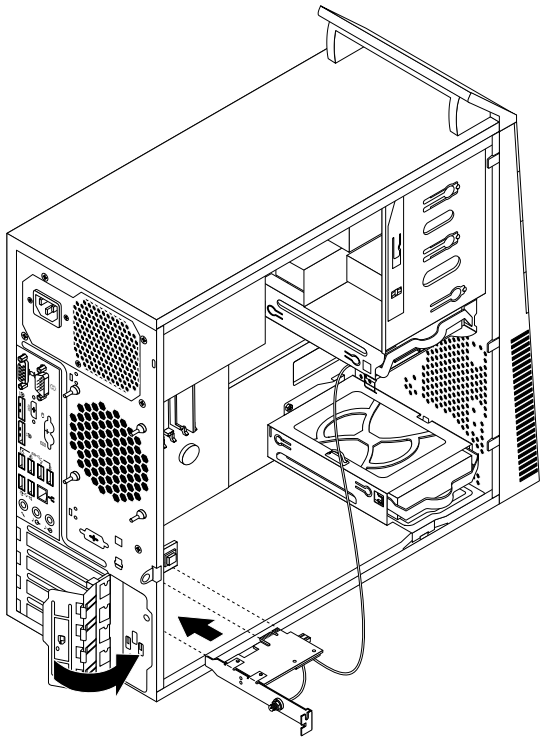

Figure 94. Installing the Wi-Fi adapter card

What to do next:

- To work with another piece of hardware, go to the appropriate section.
- To complete the installation or replacement, go to “Completing the parts replacement” on page 156.

Installing or removing the rear Wi-Fi antenna

Attention: Do not open your computer or attempt any repair before reading and understanding the Chapter 1 “Safety information” on page 1.

This section provides instructions on how to install or remove the rear Wi-Fi antenna.

Installing the rear Wi-Fi antenna

To install the rear Wi-Fi antenna, do the following:

1. Remove all media from the drives and turn off all attached devices and the computer. Then, disconnect all power cords from electrical outlets and disconnect all cables that are connected to the computer.
2. Remove the computer cover. See “Removing the computer cover” on page 93.
3. Install the rear Wi-Fi antenna to the rear Wi-Fi antenna cable connector attached on the rear of the computer.
4. Adjust the angle of the rear antenna to lower the risk of breaking the antenna by accident.

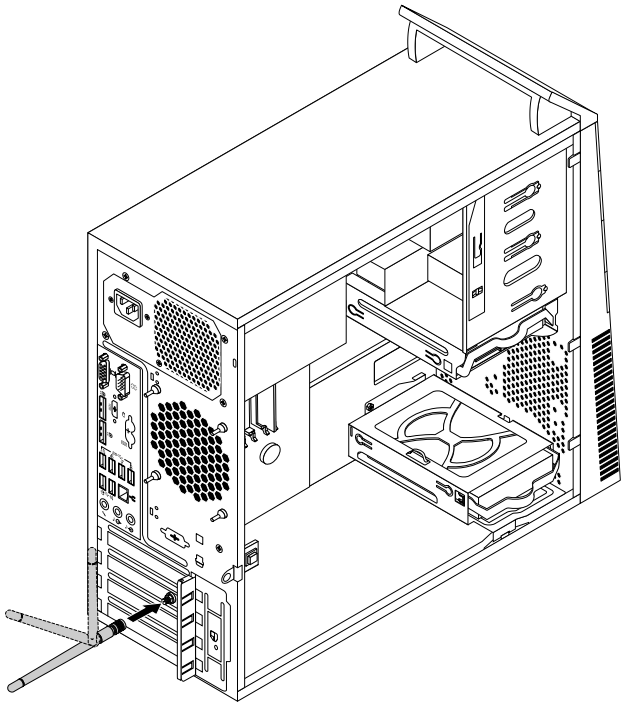

Figure 95. Installing the rear Wi-Fi antenna

What to do next:

- To work with another piece of hardware, go to the appropriate section.
- To complete the installation or replacement, go to “Completing the parts replacement” on page 156.

Removing the rear Wi-Fi antenna

To remove the rear Wi-Fi antenna, do the following:

1. Remove all media from the drives and turn off all attached devices and the computer. Then, disconnect all power cords from electrical outlets and disconnect all cables that are connected to the computer.
2. Remove the computer cover. See “Removing the computer cover” on page 93.
3. Straighten the rear Wi-Fi antenna so that it can be more easily twisted.
4. Hold the thicker end of the rear Wi-Fi antenna and unscrew the Wi-Fi antenna from the rear of the computer.

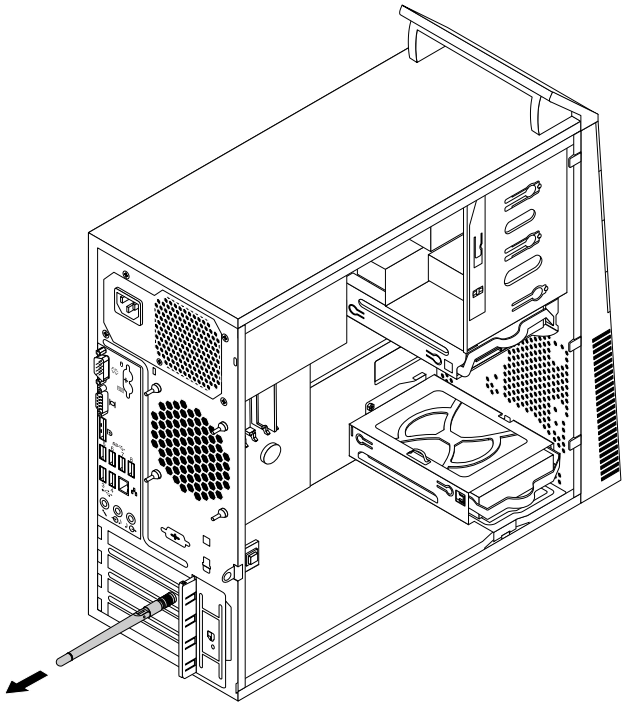

Figure 96. Removing the rear Wi-Fi antenna

What to do next:

- To work with another piece of hardware, go to the appropriate section.
- To complete the installation or replacement, go to “Completing the parts replacement” on page 156.

Installing or removing the front Wi-Fi antenna

Attention: Do not open your computer or attempt any repair before reading and understanding the Chapter 1 “Safety information” on page 1.

This section provides instructions on how to install or remove the front Wi-Fi antenna.

Installing the front Wi-Fi antenna

To install the front Wi-Fi antenna, do the following:

1. Remove all media from the drives and turn off all attached devices and the computer. Then, disconnect all power cords from electrical outlets and disconnect all cables that are connected to the computer.
2. Remove the computer cover. See “Removing the computer cover” on page 93.

3. Remove the front bezel. See “Removing and reinstalling the front bezel” on page 94.
4. Peel off the paper that protects the stickers on the front antenna.

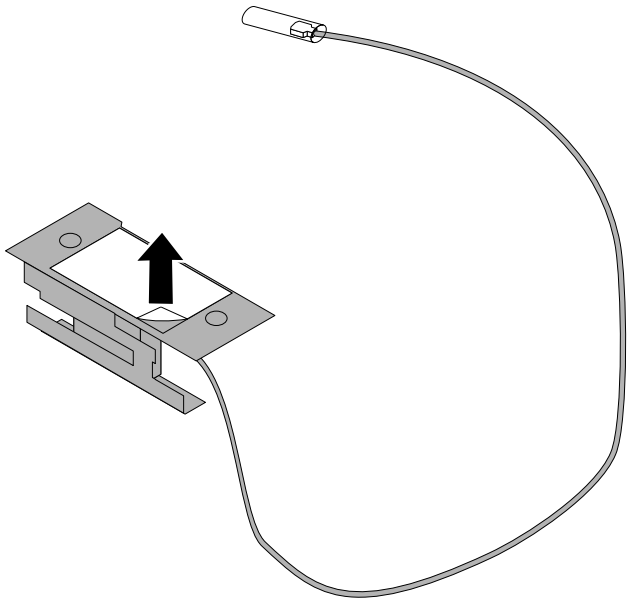

Figure 97. Peeling off the paper that protects the stickers

5. Stick the front antenna to the front panel as shown. Then insert the front antenna cable through the hole in the front panel.

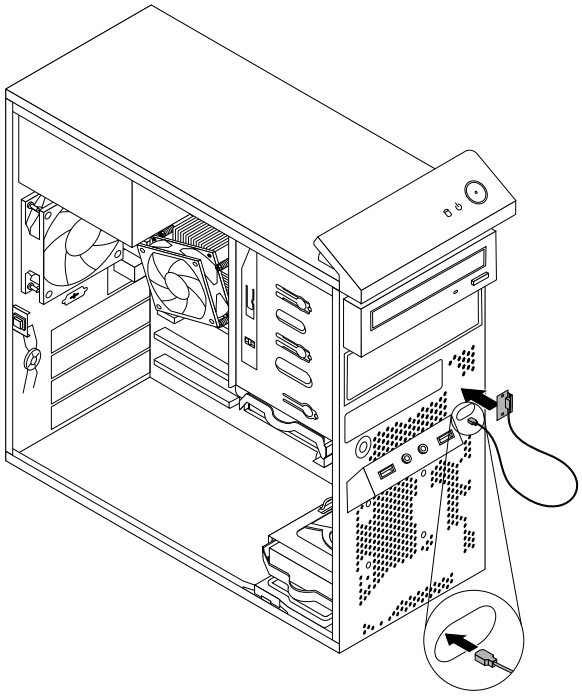

Figure 98. Installing the front Wi-Fi antenna

6. Connect the front antenna cable to the Wi-Fi card module.

What to do next:

- To work with another piece of hardware, go to the appropriate section.
- To complete the installation or replacement, go to “Completing the parts replacement” on page 156.

Removing the front Wi-Fi antenna

To remove the front Wi-Fi antenna, do the following:

1. Remove all media from the drives and turn off all attached devices and the computer. Then, disconnect all power cords from electrical outlets and disconnect all cables that are connected to the computer.
2. Remove the computer cover. See “Removing the computer cover” on page 93.
3. Remove the front bezel. See “Removing and reinstalling the front bezel” on page 94.
4. Disconnect the front antenna cable from the Wi-Fi card module.
5. Remove the front antenna and cable from the front of the computer.

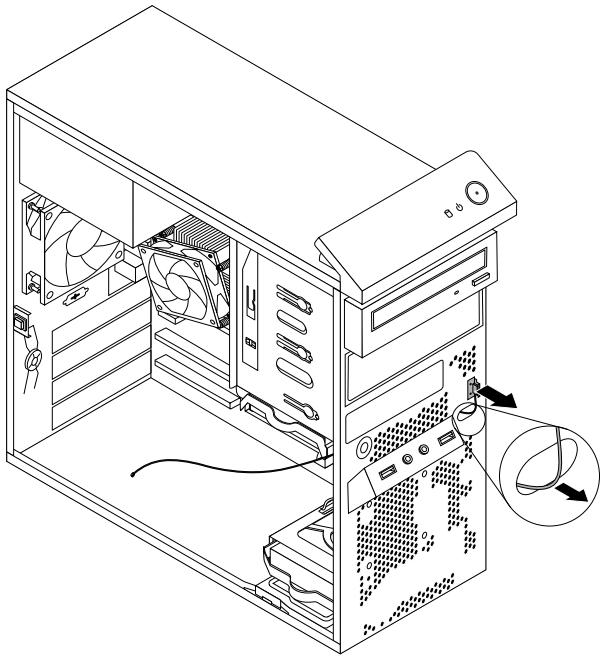

Figure 99. Removing the front Wi-Fi antenna

What to do next:

- To work with another piece of hardware, go to the appropriate section.
- To complete the installation or replacement, go to “Completing the parts replacement” on page 156.

Replacing the keyboard or mouse

Attention: Do not open your computer or attempt any repair before reading and understanding the Chapter 1 “Safety information” on page 1.

This section provides instructions on how to replace the keyboard or mouse.

To replace the keyboard or mouse, do the following:

1. Disconnect the old keyboard cable or mouse cable from the computer.
2. Connect a new keyboard or mouse to one of the USB connectors on the computer. Depending on where you want to connect the new keyboard or mouse, see “Locating connectors, controls, and indicators on the front of your computer” on page 67 or “Locating connectors on the rear of your computer” on page 67.

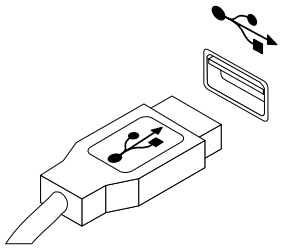

Figure 100. Connecting the USB keyboard or mouse

Completing the parts replacement

After completing the installation or replacement for all parts, you need to reinstall the computer cover and reconnect cables.

To reinstall the computer cover and reconnect cables to your computer, do the following:

1. Make sure that all components have been reassembled correctly and that no tools or loose screws are left inside your computer. See “Locating major FRUs and CRUs” on page 70 for the locations of various components in your computer.
2. If you have removed the front bezel, reinstall it.
3. Make sure that the cables are routed correctly before reinstalling the computer cover. Keep cables clear of the hinges and sides of the computer chassis to avoid interference with reinstalling the computer cover.

4. Position the computer cover on the chassis so that the rail guides on the bottom of the computer cover engage the rails on the chassis. Then, push the cover to the front of the computer until it snaps into position.

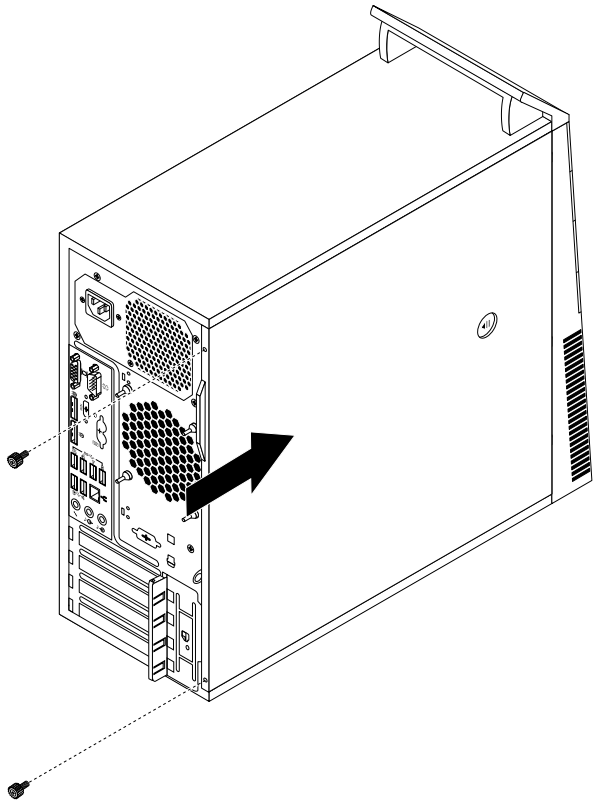

Figure 101. Reinstalling the computer cover

5. Install the screws to secure the computer cover.
6. Reconnect the external cables and power cords to the computer. See “Locating parts on the system board” on page 72.
7. To update your configuration, refer to Chapter 5 “Using the Setup Utility program” on page 55.

Note: In most areas of the world, Lenovo requires the return of the defective Customer Replaceable Unit (CRU). Information about this will come with the CRU or will come a few days after the CRU arrives.

Obtaining device drivers

You can obtain device drivers for operating systems that are not preinstalled at http://www.lenovo.com/support. Installation instructions are provided in readme files with the device-driver files.

Chapter 9. Replacing FRUs (machine types: 10A2, 10A3, 10A8, 10A9, 10AH, 10AJ, 10AM, and 10AN)

This chapter provides information about the FRU replacement instructions.

Important: Be sure to read and understand Chapter 1 “Safety information” on page 1 before replacing any FRU. These precautions and guidelines will help you work safely.

Note: FRU replacements are to be done only by trained service technicians.

Installing external options

You can connect external options to your computer, such as external speakers, a printer, or a scanner. For some external options, you must install additional software in addition to making the physical connection. When installing an external option, see “Locating connectors, controls, and indicators on the front of your computer” on page 77 and “Locating connectors on the rear of your computer” on page 77 to identify the required connector. Then, use the instructions that come with the option to help you make the connection and install any software or device drivers that are required for the option.

Removing the computer cover

Attention: Do not open your computer or attempt any repair before reading and understanding the Chapter 1 “Safety information” on page 1.

This section provides instructions on how to remove the computer cover.

CAUTION:



Before you open the computer cover, turn off the computer and wait several minutes until the computer is cool.

To remove the computer cover, do the following:

1. Remove any media from the drives and turn off all attached devices and the computer.
2. Disconnect all power cords from electrical outlets.
3. Disconnect the power cord, Input/Output cables, and any other cables that are connected to the computer.

© Copyright Lenovo 2013, 2015

4. Remove the screws that secure the computer cover. Then, press the cover-release button on the side of the computer and slide the computer cover to the rear of the computer to remove it.

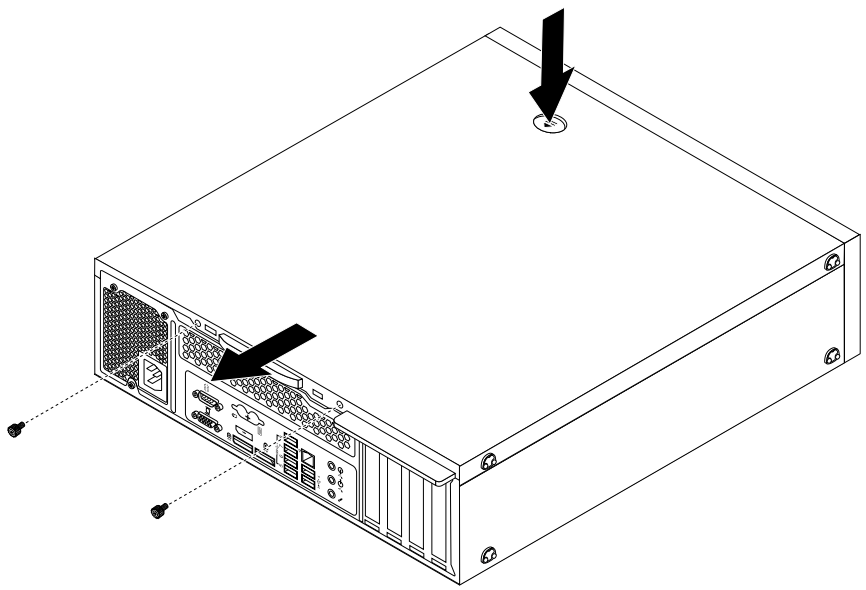

Figure 102. Removing the computer cover

Removing and reinstalling the front bezel

Attention: Do not open your computer or attempt any repair before reading and understanding the Chapter 1 “Safety information” on page 1.

This section provides instructions on how to remove and reinstall the front bezel.

To remove and reinstall the front bezel, do the following:

1. Remove all media from the drives and turn off all attached devices and the computer. Then, disconnect all power cords from electrical outlets and disconnect all cables that are connected to the computer.
2. Remove the computer cover. See “Removing the computer cover” on page 159.

3. Release the three plastic tabs on the top of the front bezel and pivot the front bezel outward to remove it from the computer.

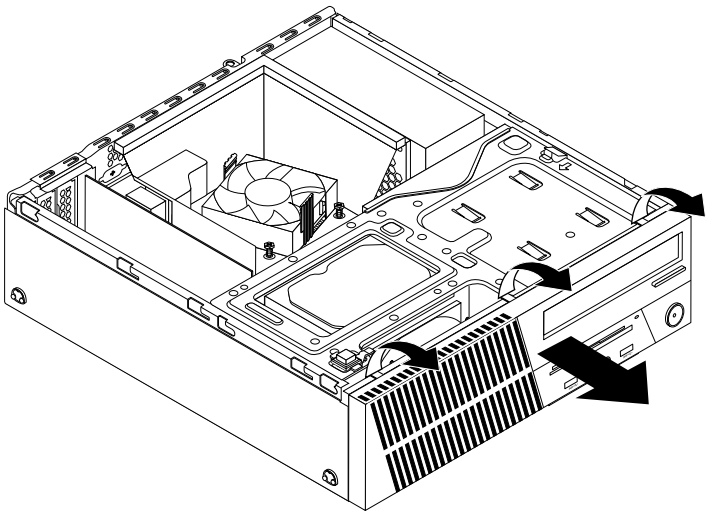

Figure 103. Removing the front bezel

4. To reinstall the front bezel, align the three plastic tabs on the bottom of the front bezel with the corresponding holes in the chassis, and then pivot the front bezel inward until it snaps into position.

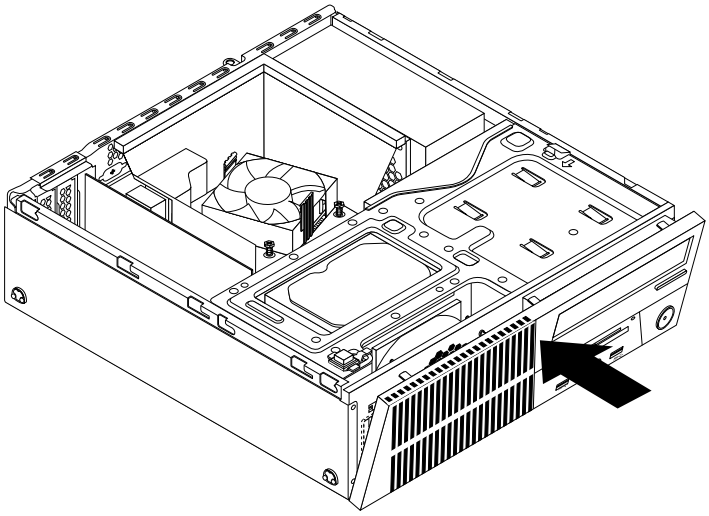

Figure 104. Installing the front bezel

What to do next:

- To work with another piece of hardware, go to the appropriate section.
- To complete the installation or replacement, go to "Completing the parts replacement" on page 234.

Accessing the system board components and drives

Attention: Do not open your computer or attempt any repair before reading and understanding the Chapter 1 "Safety information" on page 1.

This section provides instructions on how to access the system board components and drives.

To access the system board components and drives, do the following:

1. Remove all media from the drives and turn off all attached devices and the computer. Then, disconnect all power cords from electrical outlets and disconnect all cables that are connected to the computer.
2. Remove the computer cover. See “Removing the computer cover” on page 159.
3. Remove the front bezel. See “Removing and reinstalling the front bezel” on page 160
4. Remove the heat sink fan duct. See “Replacing the heat sink and fan assembly” on page 191.
5. Press the retaining clip **1** in the direction as shown and pivot the drive bay assembly upward at the same time.

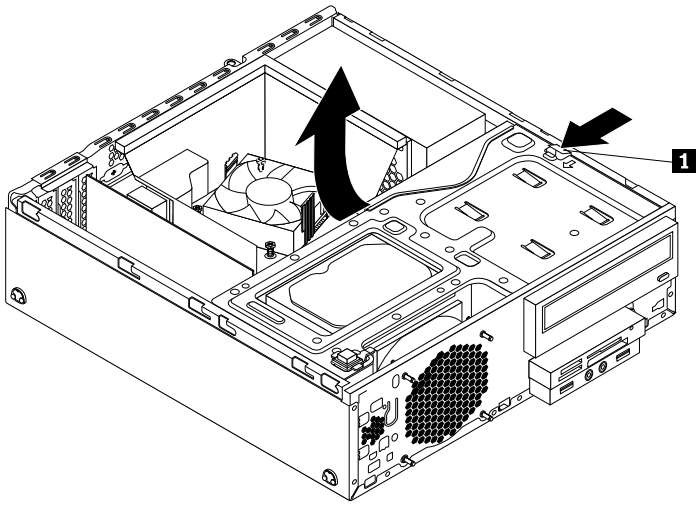

Figure 105. Pivoting the drive bay assembly upward

What to do next:

- To work with another piece of hardware, go to the appropriate section.
- To complete the installation or replacement, go to “Completing the parts replacement” on page 234.

Installing or replacing a PCI card

Attention: Do not open your computer or attempt any repair before reading and understanding the Chapter 1 “Safety information” on page 1.

This section provides instructions on how to install or replace a PCI card. Your computer has various PCI card slots. For more information.

To install or replace a PCI card, do the following:

1. Remove all media from the drives and turn off all attached devices and the computer. Then, disconnect all power cords from electrical outlets and disconnect all cables that are connected to the computer.
2. Remove the computer cover. See “Removing the computer cover” on page 159.
3. Remove the front bezel. See “Removing and reinstalling the front bezel” on page 160
4. Rotate the PCI card retainer to the open position. Depending on whether you are installing or replacing a PCI card, do one of the following:
   - If you are installing a PCI card, remove the appropriate metal slot cover.

- If you are replacing an old PCI card, grasp the old card that is currently installed and gently pull it out of the slot.

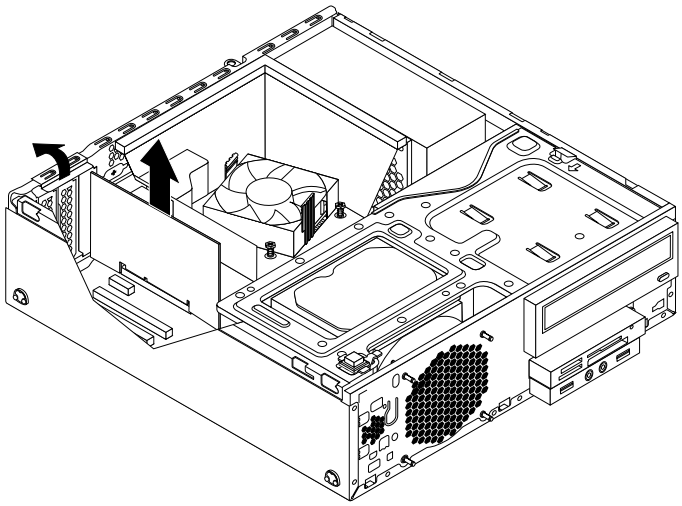

Figure 106. Removing a PCI card

Notes:

a. The card fits tightly into the card slot. If necessary, alternate moving each side of the card a small and equal amount until the card is removed from the slot.

b. If the card is held in place by a retaining latch, press the retaining latch **1** as shown to disengage the latch. Grasp the card and gently pull it out of the slot.

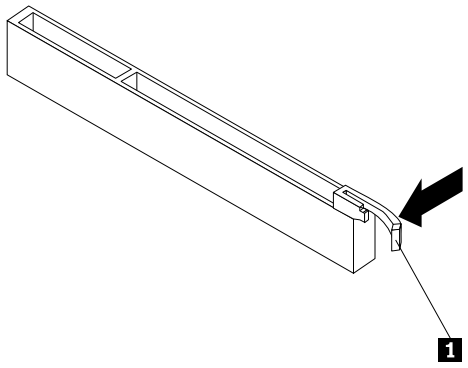

5. Remove the new PCI card from its static-protective package.

6. Install the new card into the appropriate card slot on the system board and rotate the card retainer to the closed position. See “Locating parts on the system board” on page 82.

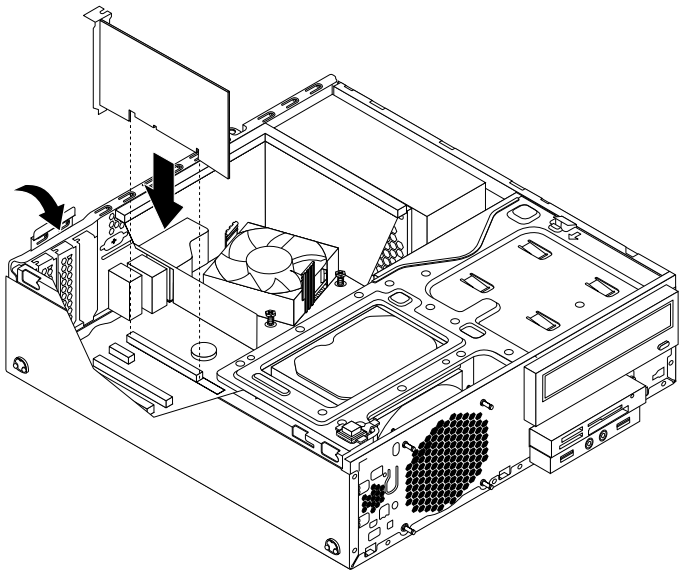

Figure 107. Installing a PCI card

What to do next:

- To work with another piece of hardware, go to the appropriate section.
- To complete the installation or replacement, go to “Completing the parts replacement” on page 234.

Installing or replacing a memory module

Attention: Do not open your computer or attempt any repair before reading and understanding the Chapter 1 “Safety information” on page 1.

This section provides instructions on how to install or replace a memory module.

Your computer has four memory slots for installing or replacing double data rate 3 small outline dual inline memory modules (DDR3 SODIMMs) that provide up to a maximum of 32 GB system memory. When installing or replacing a memory module, use 2 GB, 4 GB, or 8 GB DDR3 UDIMMs in any combination up to a maximum of 32 GB.

The following table provides information about the memory module installation rules that you should consider when installing or removing a memory module. The “X” mark indicates the memory slots into which the memory modules should be installed in different situations. The numbers 1, 2, 3, and 4 indicate the installation sequence. To locate the memory module slots, see “Locating parts on the system board” on page 82.

UDIMM	DIMM 1	DIMM 2	DIMM 3	DIMM 4
One UDIMM		X		
Two UDIMMs		X, 1		X, 2
Three UDIMMs	X, 3	X, 1		X, 2
Four UDIMMs	X, 3	X, 2	X, 4	X, 2

To install or replace a memory module, do the following:

1. Remove all media from the drives and turn off all attached devices and the computer. Then, disconnect all power cords from electrical outlets and disconnect all cables that are connected to the computer.
2. Remove the computer cover. See “Removing the computer cover” on page 159.
3. Remove the front bezel. See “Removing and reinstalling the front bezel” on page 160
4. Locate the memory slots. See “Locating parts on the system board” on page 82.
5. Press the retaining clip **1** in the direction as shown and pivot the drive bay assembly upward at the same time.

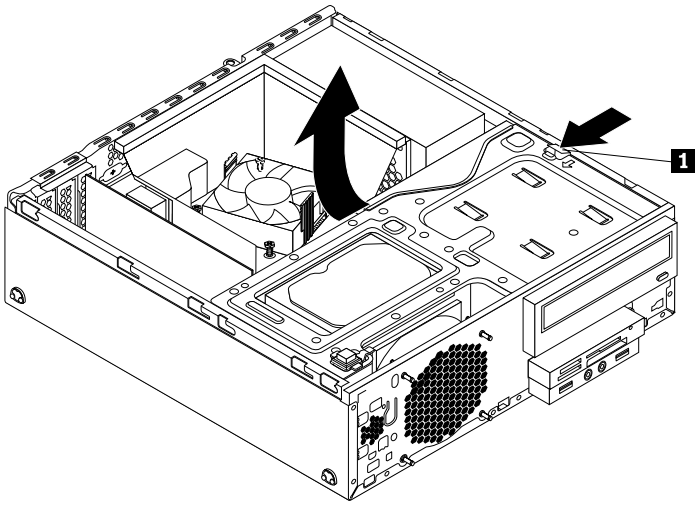

Figure 108. Pivoting the drive bay assembly upward

6. Remove the heat sink fan duct. See “Replacing the heat sink and fan assembly” on page 191.
7. Depending on your computer model, you might need to remove the PCI Express x16 graphics card for easier access to the memory slots. See “Installing or replacing a PCI card” on page 162.
8. Depending on whether you are installing or replacing a memory module, do one of the following:
   - If you are replacing an old memory module, open the retaining clips and gently pull the memory module out of the memory slot.

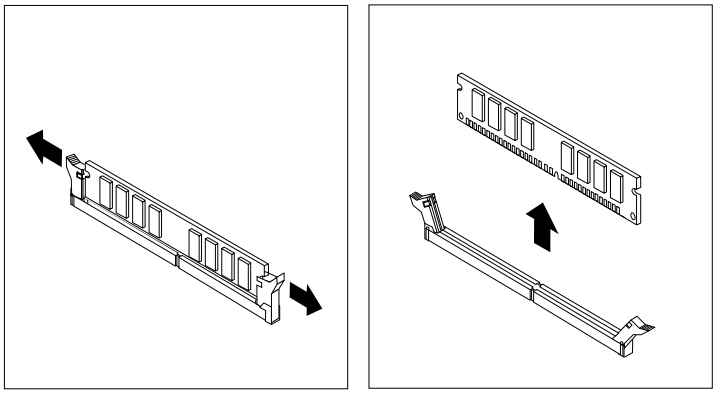

Figure 109. Removing a memory module

- If you are installing a memory module, open the retaining clips of the memory slot into which you want to install the memory module.

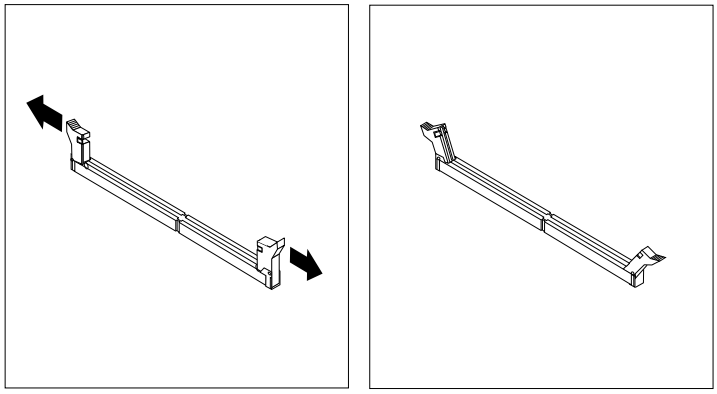

Figure 110. Opening the retaining clips

9. Position the new memory module over the memory slot. Ensure that the notch **1** on the new memory module is aligned with the key **2** in the slot. Then, push the new memory module straight down into the slot until the retaining clips fully close.

   Note: Ensure that the memory module is seated securely and cannot be moved easily.

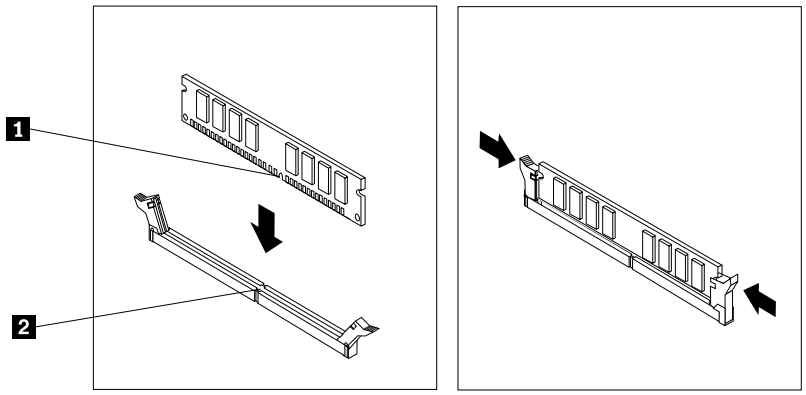

Figure 111. Installing a memory module

10. Reinstall the PCI Express x16 graphics card if you had removed it. See “Installing or replacing a PCI card” on page 162.
11. Reinstall the heat sink fan duct. See “Replacing the heat sink and fan assembly” on page 191.

What to do next:

- To work with another piece of hardware, go to the appropriate section.
- To complete the installation or replacement, go to “Completing the parts replacement” on page 234.

Replacing the optical drive

Attention: Do not open your computer or attempt any repair before reading and understanding the Chapter 1 “Safety information” on page 1.

This section provides instructions on how to replace the optical drive.

To replace the optical drive, do the following:

1. Remove all media from the drives and turn off all attached devices and the computer. Then, disconnect all power cords from electrical outlets and disconnect all cables that are connected to the computer.
2. Remove the computer cover. See “Removing the computer cover” on page 159.
3. Remove the front bezel. See “Removing and reinstalling the front bezel” on page 160
4. Locate the optical drive bay. See “Locating major FRUs and CRUs” on page 80.
5. Press the retaining clip **1** in the direction as shown and pivot the drive bay assembly upward at the same time.

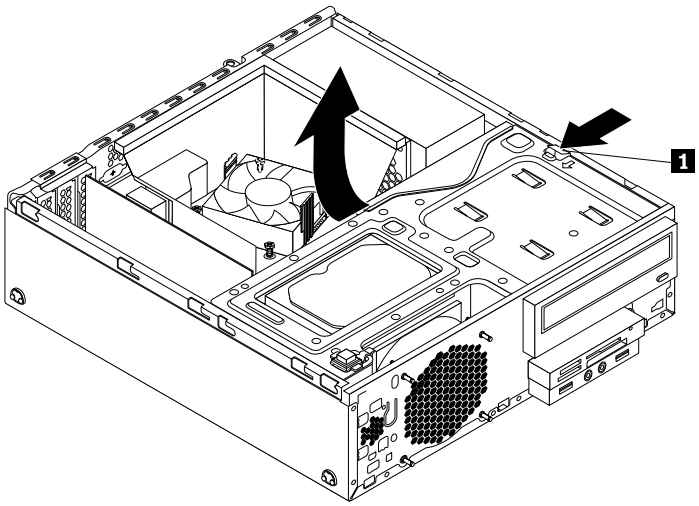

Figure 112. Pivoting the drive bay assembly upward

6. Disconnect the signal cable and the power cable from the rear of the optical drive.

7. Press the optical drive lock **1** on the right side of the drive bay assembly and slide the optical drive out of the rear of the bay.

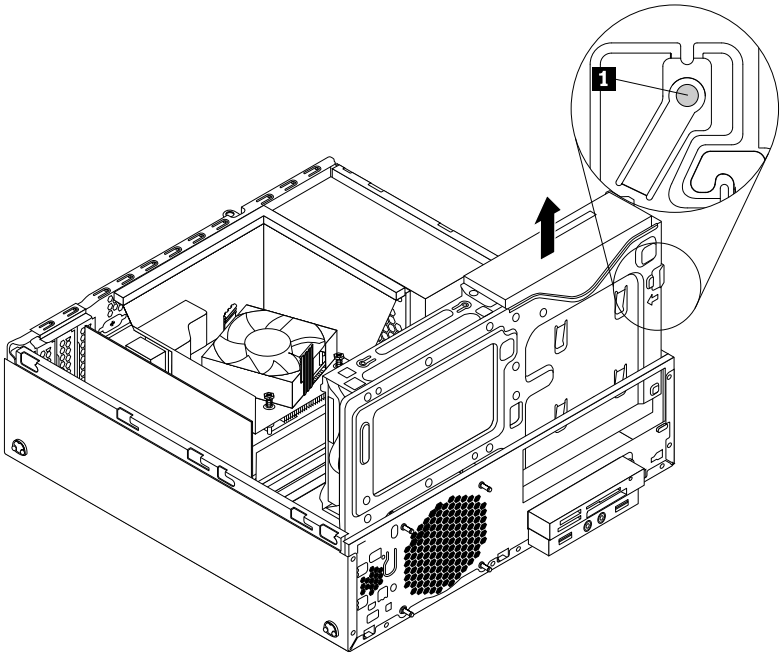

Figure 113. Removing the optical drive

8. Remove the optical drive retainer from the side of the old optical drive and install it on the side of the new optical drive.

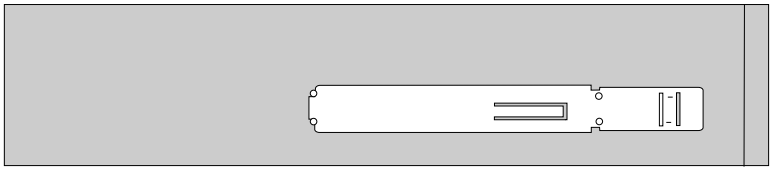

Figure 114. Installing the optical drive retainer

9. Slide the new optical drive into the drive bay until it snaps into position.

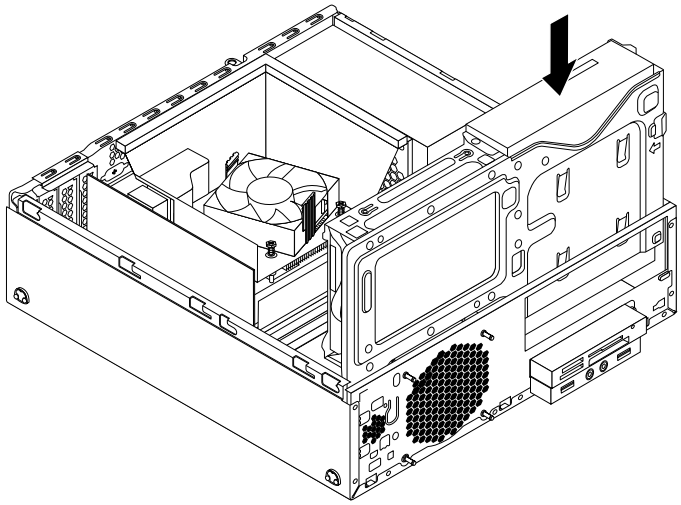

Figure 115. Installing the optical drive

10. Connect the signal cable and the power cable to rear of the new optical drive.

What to do next:

- To work with another piece of hardware, go to the appropriate section.
- To complete the installation or replacement, go to "Completing the parts replacement" on page 234.

Installing or replacing the card reader assembly

This section provides instructions on how to install or replace the card reader assembly.

Note: The card reader assembly is only available in some models.

Installing the card reader assembly

Attention: Do not open your computer or attempt any repair before reading and understanding the Chapter 1 "Safety information" on page 1.

To install the card reader assembly, do the following:

1. Remove all media from the drives and turn off all attached devices and the computer. Then, disconnect all power cords from electrical outlets and disconnect all cables that are connected to the computer.
2. Remove the computer cover. See "Removing the computer cover" on page 159.
3. Remove the front bezel. See "Removing and reinstalling the front bezel" on page 160

4. Press the retaining clip 1 in the direction as shown and pivot the drive bay assembly upward at the same time.

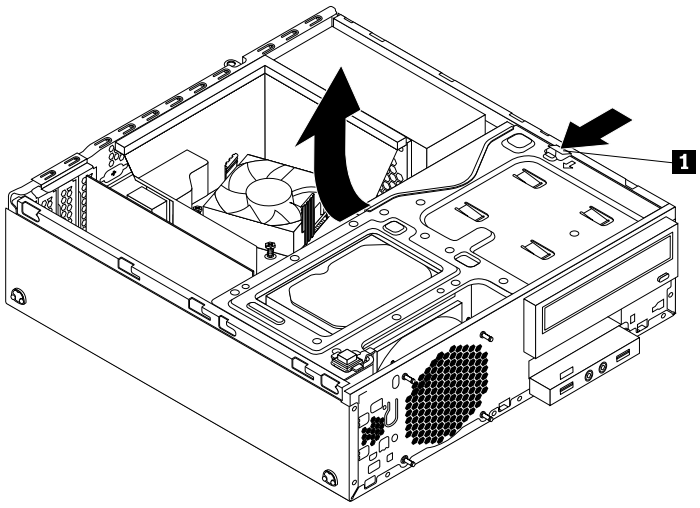

Figure 116. Pivoting the drive bay assembly upward

5. Install the new card reader assembly into the card reader drive bay until it snaps into position. Then, push the new card reader assembly to the left until the screw hole in the metal bracket of the card reader assembly is aligned with the corresponding hole in the chassis.

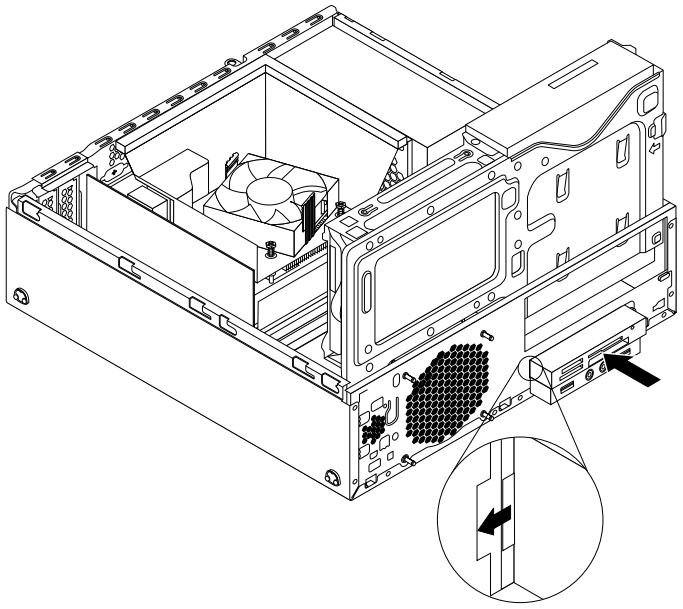

Figure 117. Installing the card reader assembly

6. Install the screw to secure the card reader assembly to the chassis.

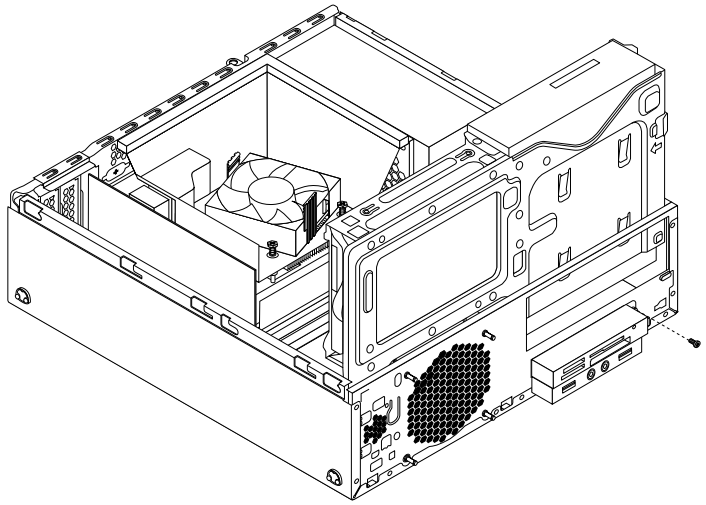

Figure 118. Installing the screw to secure the card reader assembly

7. Connect the cable of the new card reader assembly to the front USB connector 1 on the system board. See “Locating parts on the system board” on page 82
8. Before you reinstall the front bezel, remove the protective panel for the card reader assembly and the front audio and USB assembly from the front bezel. To remove this protective panel, press the retaining clips **1** as shown and then completely disengage the protective panel.

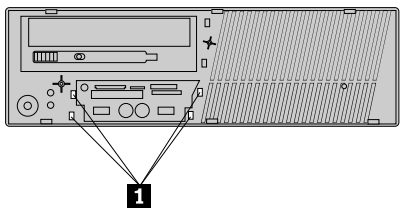

Figure 119. Removing the card reader cover

What to do next:

- To work with another piece of hardware, go to the appropriate section.
- To complete the installation or replacement, go to “Completing the parts replacement” on page 234.

Replacing the card reader assembly

Attention: Do not open your computer or attempt any repair before reading and understanding the Chapter 1 “Safety information” on page 1.

To replace the card reader assembly, do the following:

1. Remove all media from the drives and turn off all attached devices and the computer. Then, disconnect all power cords from electrical outlets and disconnect all cables that are connected to the computer.
2. Remove the computer cover. See “Removing the computer cover” on page 159.
3. Remove the front bezel. See “Removing and reinstalling the front bezel” on page 160

4. Press the retaining clip **1** in the direction as shown and pivot the drive bay assembly upward at the same time.

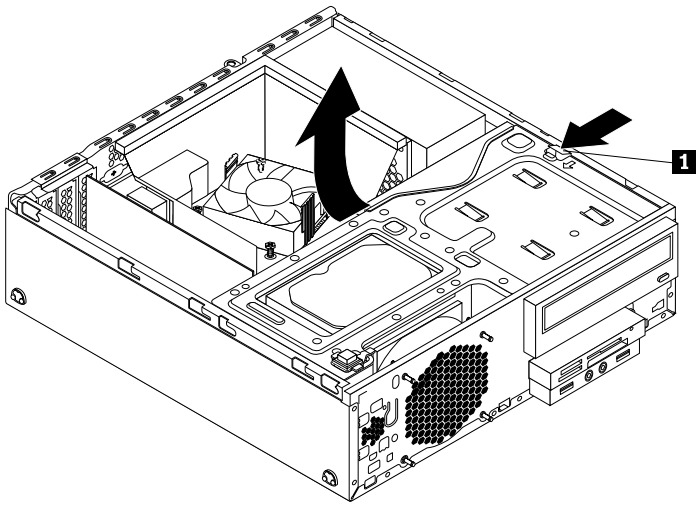

Figure 120. Pivoting the drive bay assembly upward

5. Disconnect the card reader cable from the system board.
6. Remove the screw that secures the card reader assembly. Push the card reader assembly to the right and then remove it from the chassis.

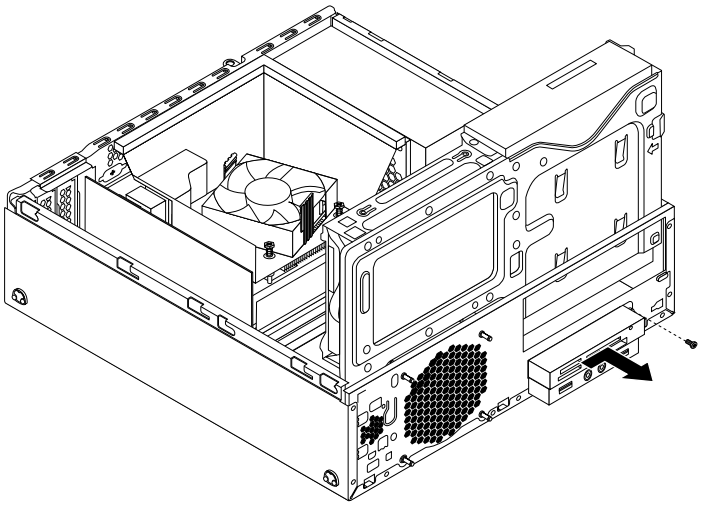

Figure 121. Removing the card reader assembly

7. Install the new card reader assembly into the card reader drive bay until it snaps into position. Then, push the new card reader assembly to the left until the screw hole in the metal bracket of the card reader assembly is aligned with the corresponding hole in the chassis.

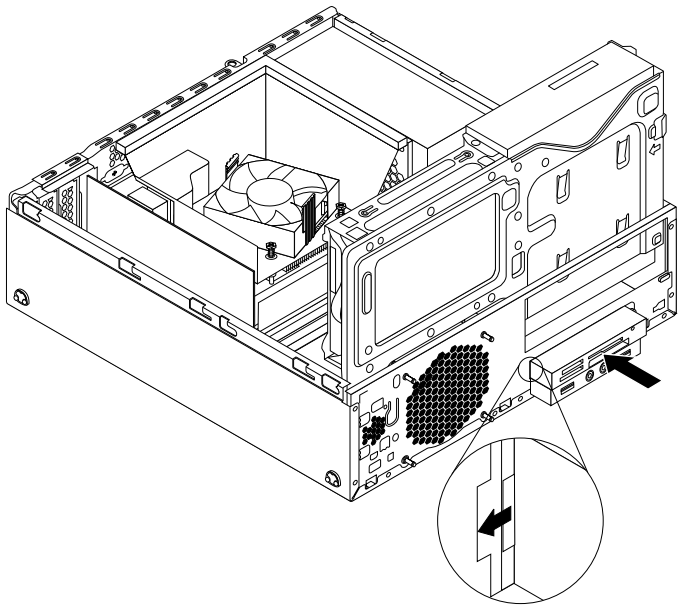

Figure 122. Installing the card reader assembly

8. Install the screw to secure the card reader assembly to the chassis.

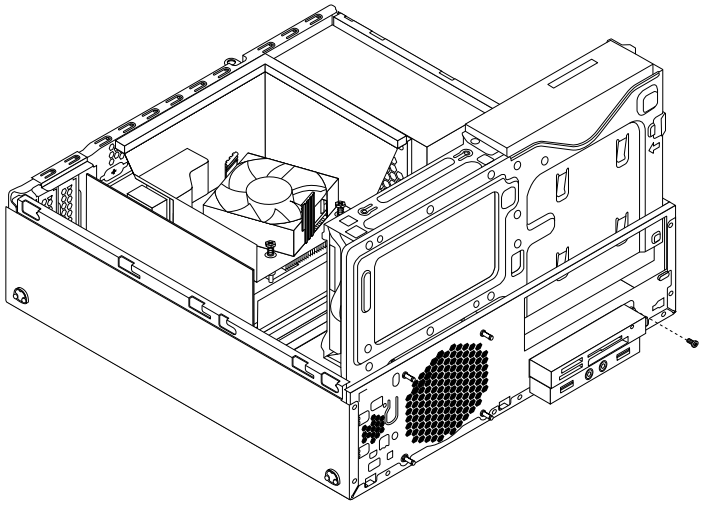

Figure 123. Installing the screw to secure the card reader assembly

9. Connect the cable of the new card reader assembly to the front USB connector 1 on the system board. See “Locating parts on the system board” on page 82

What to do next:

- To work with another piece of hardware, go to the appropriate section.
- To complete the installation or replacement, go to “Completing the parts replacement” on page 234.

Installing or replacing the front USB assembly

This section provides instructions on how to install or replace the front USB assembly.

Note: The front USB assembly is only available in some models.

Installing the front USB assembly

Attention: Do not open your computer or attempt any repair before reading and understanding the Chapter 1 “Safety information” on page 1.

To install the front USB assembly, do the following:

1. Remove all media from the drives and turn off all attached devices and the computer. Then, disconnect all power cords from electrical outlets and disconnect all cables that are connected to the computer.
2. Remove the computer cover. See “Removing the computer cover” on page 159.
3. Remove the front bezel. See “Removing and reinstalling the front bezel” on page 160
4. Press the retaining clip **1** in the direction as shown and pivot the drive bay assembly upward at the same time.

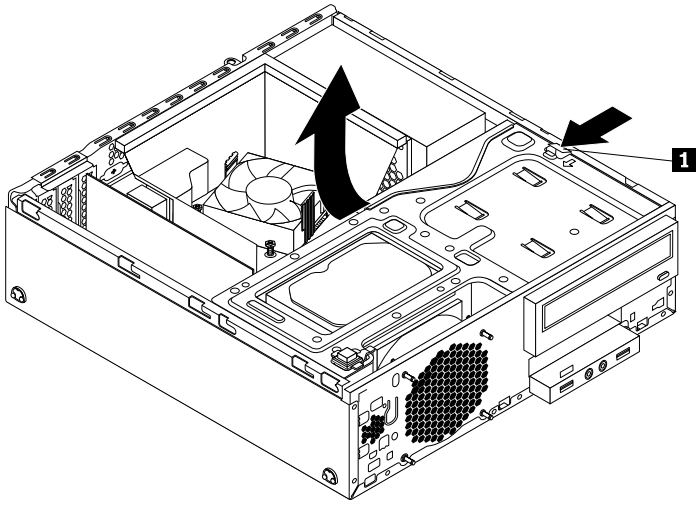

Figure 124. Pivoting the drive bay assembly upward

5. The package of the new front USB assembly contains a front USB board, a metal bracket, and two screws. Install the front USB board into the metal bracket and then install the two screws to secure the front USB board to the bracket.

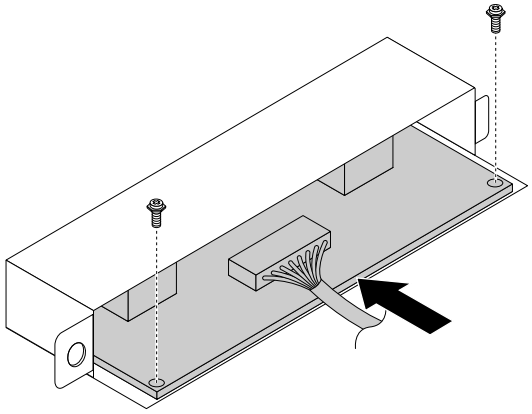

Figure 125. Assembling the front USB assembly

6. Install the new front USB assembly into the card reader drive bay until it snaps into position. Then, push the new front USB assembly to the left until the screw hole in the metal bracket of the front USB assembly is aligned with the corresponding hole in the chassis.

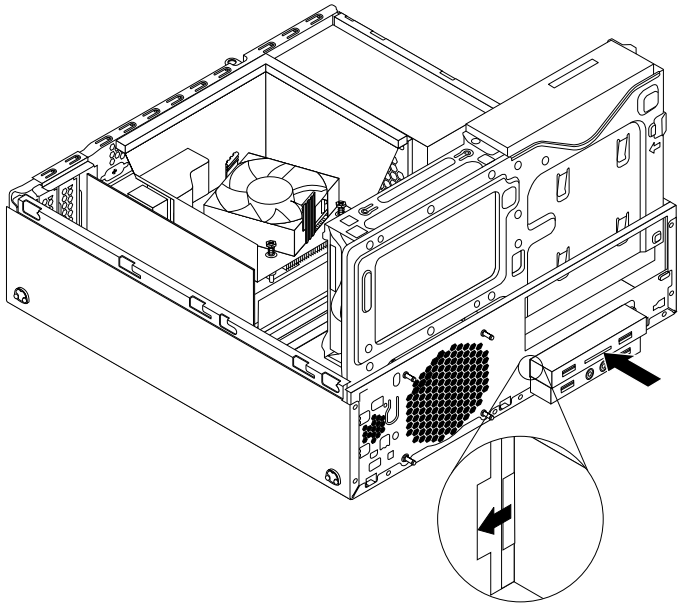

Figure 126. Installing the front USB assembly

7. Install the screw to secure the front USB assembly to the chassis.

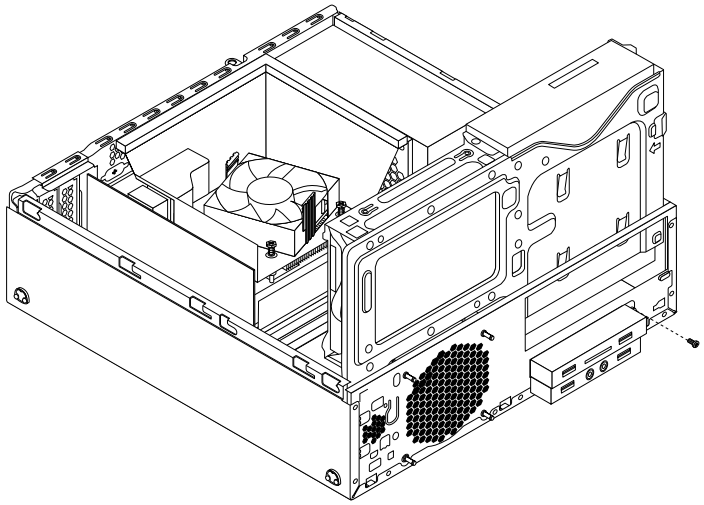

Figure 127. Installing the screw to secure the front USB assembly

8. Connect the cable of the new front USB assembly to the front USB connector 1 on the system board. See “Locating parts on the system board” on page 82
9. Before you reinstall the front bezel, remove the protective panel for the card reader assembly and the front audio and USB assembly from the front bezel. To remove this protective panel, press the retaining clips **1** as shown and then completely disengage the protective panel.

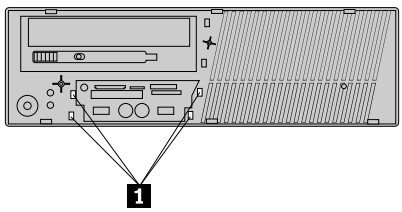

Figure 128. Removing the protective panel

What to do next:

- To work with another piece of hardware, go to the appropriate section.
- To complete the installation or replacement, go to “Completing the parts replacement” on page 234.

Replacing the front USB assembly

Attention: Do not open your computer or attempt any repair before reading and understanding the Chapter 1 “Safety information” on page 1.

To replace the front USB assembly, do the following:

1. Remove all media from the drives and turn off all attached devices and the computer. Then, disconnect all power cords from electrical outlets and disconnect all cables that are connected to the computer.
2. Remove the computer cover. See “Removing the computer cover” on page 159.
3. Remove the front bezel. See “Removing and reinstalling the front bezel” on page 160

4. Press the retaining clip 1 in the direction as shown and pivot the drive bay assembly upward at the same time.

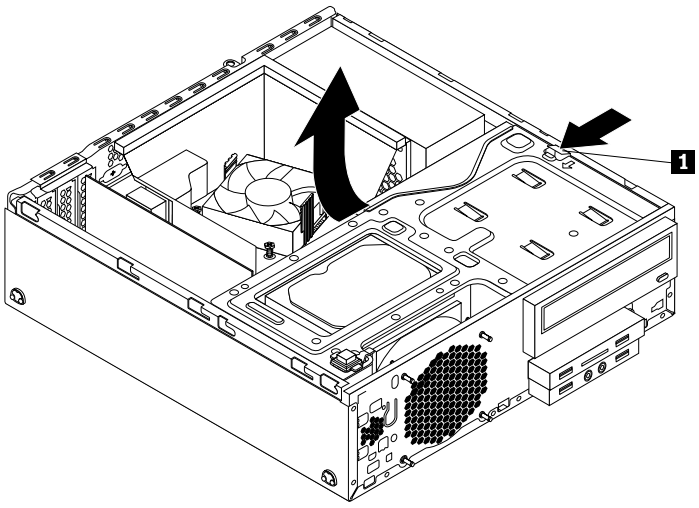

Figure 129. Pivoting the drive bay assembly upward

5. Disconnect the front USB assembly cable from the system board.
6. Remove the screw that secures the front USB assembly. Push the front USB assembly to the right and then remove it from the chassis.

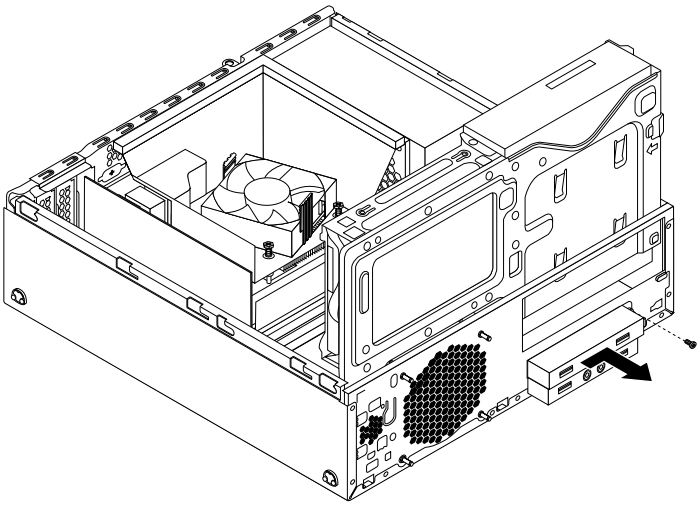

Figure 130. Removing the front USB assembly

7. Install the new front USB assembly into the card reader drive bay until it snaps into position. Then, push the new front USB assembly to the left until the screw hole in the metal bracket of the front USB assembly is aligned with the corresponding hole in the chassis.

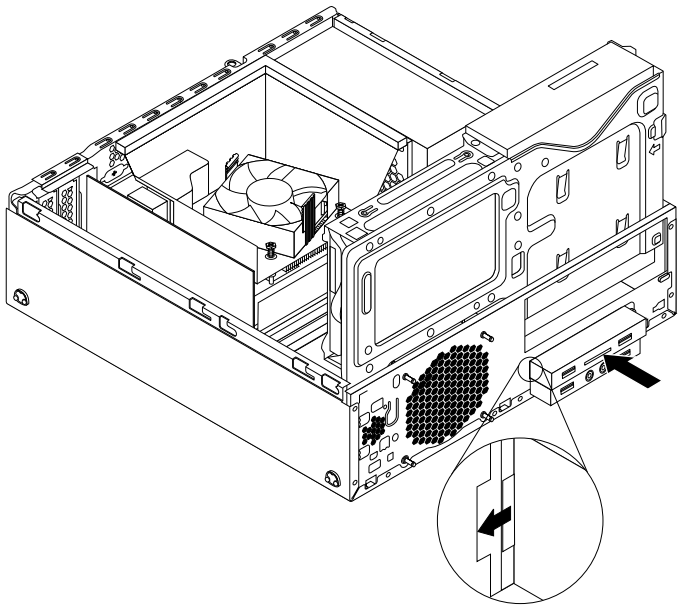

Figure 131. Installing the front USB assembly

8. Install the screw to secure the front USB assembly to the chassis.

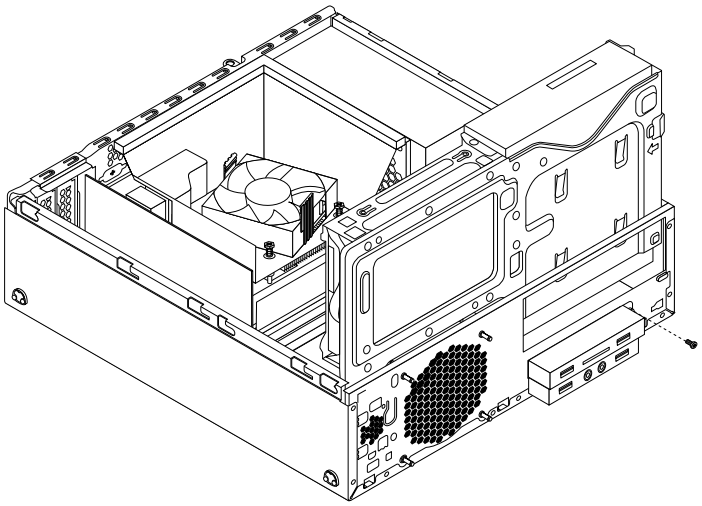

Figure 132. Installing the screw to secure the front USB assembly

9. Connect the cable of the new front USB assembly to the front USB connector 1 on the system board. See “Locating parts on the system board” on page 82

What to do next:

- To work with another piece of hardware, go to the appropriate section.
- To complete the installation or replacement, go to “Completing the parts replacement” on page 234.

Replacing the battery

Attention: Do not open your computer or attempt any repair before reading and understanding the Chapter 1 “Safety information” on page 1.

Your computer has a special type of memory that maintains the date, time, and settings for built-in features, such as parallel-port assignments (configuration). A battery keeps this information active when you turn off the computer.

The battery normally requires no charging or maintenance throughout its life; however, no battery lasts forever. If the battery fails, the date, time, and configuration information (including passwords) are lost. An error message is displayed when you turn on the computer.

Refer to the “Lithium coin cell battery notice” in the *Safety, Warranty, and Setup Guide* that came with your computer for information about replacing and disposing of the battery.

To replace the battery, do the following:

1. Remove all media from the drives and turn off all attached devices and the computer. Then, disconnect all power cords from electrical outlets and disconnect all cables that are connected to the computer.
2. Remove the computer cover. See “Removing the computer cover” on page 159.
3. Remove the heat sink fan duct. See “Replacing the heat sink and fan assembly” on page 191.
4. Depending on your computer model, you might need to remove the PCI Express x16 graphics card for easier access to the battery. See “Installing or replacing a PCI card” on page 162.
5. Remove the old battery.

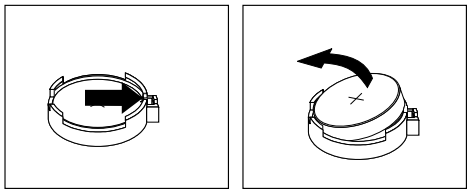

Figure 133. Removing the battery

6. Install a new battery.

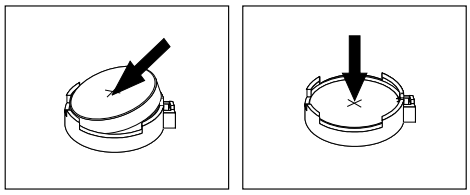

Figure 134. Installing the battery

7. Reinstall the PCI Express x16 graphics card if you had removed it. See “Installing or replacing a PCI card” on page 162.
8. Reinstall the heat sink fan duct. See “Replacing the heat sink and fan assembly” on page 191.
9. Reinstall the computer cover and reconnect the cables. See “Completing the parts replacement” on page 156.

Note: When the computer is turned on for the first time after replacing the battery, an error message might be displayed. This is normal after replacing the battery.

10. Turn on the computer and all attached devices.
11. Use the Setup Utility program to set the date, time, and any passwords. See Chapter 5 “Using the Setup Utility program” on page 55.

What to do next:

- To work with another piece of hardware, go to the appropriate section.
- To complete the installation or replacement, go to “Completing the parts replacement” on page 234.

Installing or replacing the mSATA solid-state drive

This section provides instructions on how to install or replace the mSATA solid-state drive.

Note: The mSATA solid-state drive is only available in some models.

Installing the mSATA solid-state drive

Attention: Do not open your computer or attempt any repair before reading and understanding the Chapter 1 “Safety information” on page 1.

To install the mSATA solid-state drive, do the following:

1. Remove all media from the drives and turn off all attached devices and the computer. Then, disconnect all power cords from electrical outlets and disconnect all cables that are connected to the computer.
2. Remove the computer cover. See “Removing the computer cover” on page 159.
3. Remove the front bezel. See “Removing and reinstalling the front bezel” on page 160
4. Press the retaining clip **1** in the direction as shown and pivot the drive bay assembly upward at the same time.

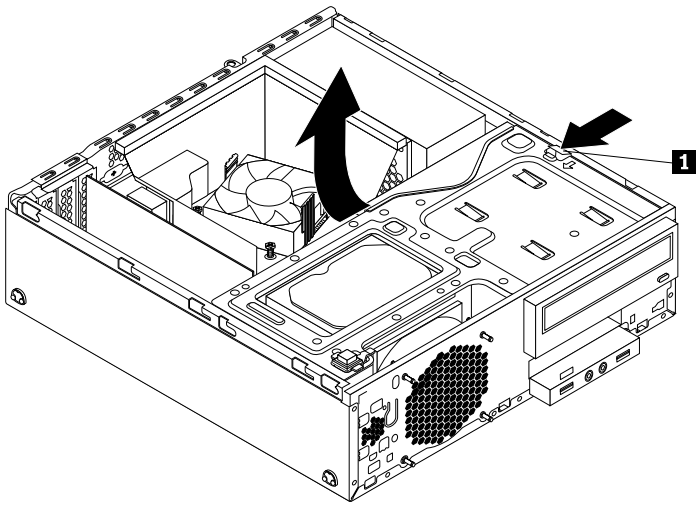

Figure 135. Pivoting the drive bay assembly upward

5. Take the new mSATA solid-state drive and the storage converter out of its static-protective package.

6. Carefully insert the mSATA solid-state drive into the mini PCI Express slot on the storage converter at an angle of about 20 degrees. Then, press the mSATA solid-state drive downward.

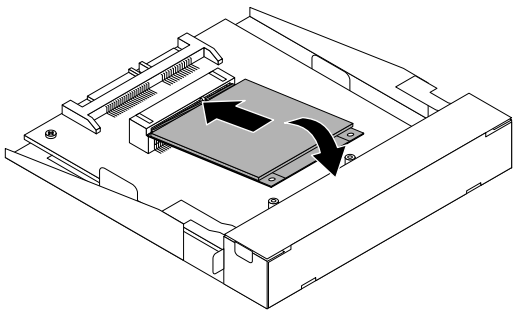

Figure 136. Installing the mSATA solid-state drive into the storage converter

7. Install the two screws that came with the mSATA solid-state drive to secure the drive to the storage converter.

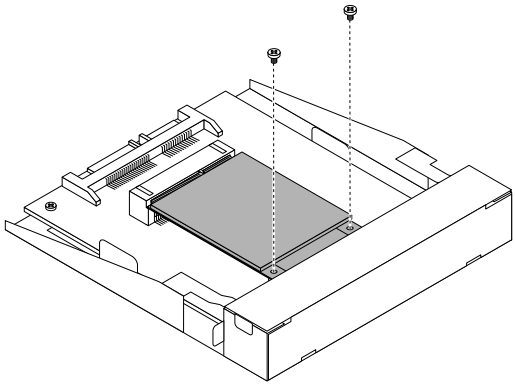

Figure 137. Installing the screws to secure the mSATA solid-state drive

8. Install the new mSATA solid-state drive into the card reader drive bay until it snaps into position. Then, push the new mSATA solid-state drive to the left until the screw hole in the metal bracket of the mSATA solid-state drive is aligned with the corresponding hole in the chassis.

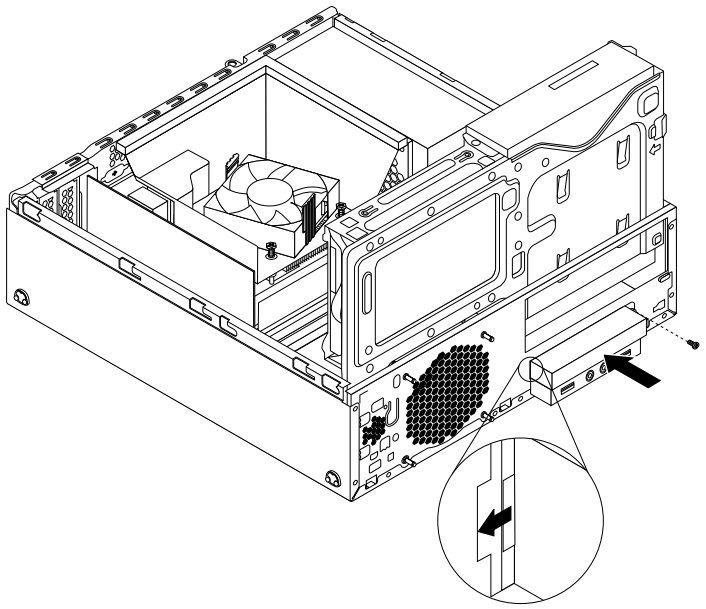

Figure 138. Installing the mSATA solid-state drive into the chassis

9. Connect the signal cable and the power cable to the rear of the storage converter.

What to do next:

- To work with another piece of hardware, go to the appropriate section.
- To complete the installation or replacement, go to “Completing the parts replacement” on page 234.

Replacing the mSATA solid-state drive

Attention: Do not open your computer or attempt any repair before reading and understanding the Chapter 1 “Safety information” on page 1.

To replace the mSATA solid-state drive, do the following:

1. Remove all media from the drives and turn off all attached devices and the computer. Then, disconnect all power cords from electrical outlets and disconnect all cables that are connected to the computer.
2. Remove the computer cover. See “Removing the computer cover” on page 159.
3. Remove the front bezel. See “Removing and reinstalling the front bezel” on page 160

4. Press the retaining clip **1** in the direction as shown and pivot the drive bay assembly upward at the same time.

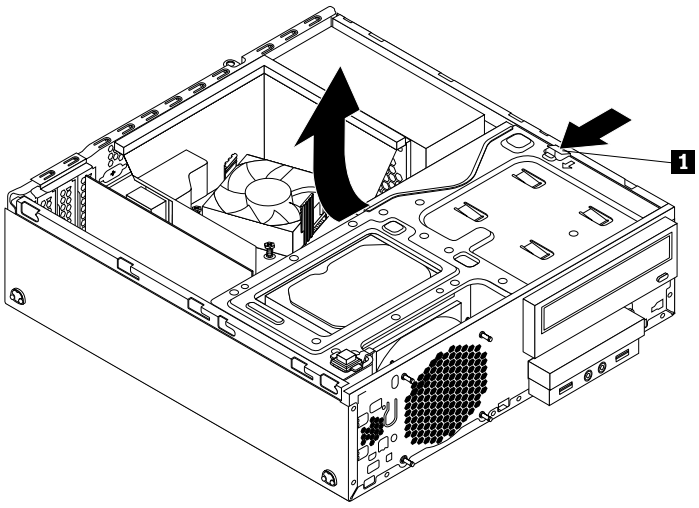

Figure 139. Pivoting the drive bay assembly upward

5. Disconnect the signal cable and power cable from the rear of the mSATA solid-state drive storage converter.
6. Remove the screw that secures the mSATA solid-state drive storage converter. Then, slide the mSATA solid-state drive storage converter out of the card reader drive bay.

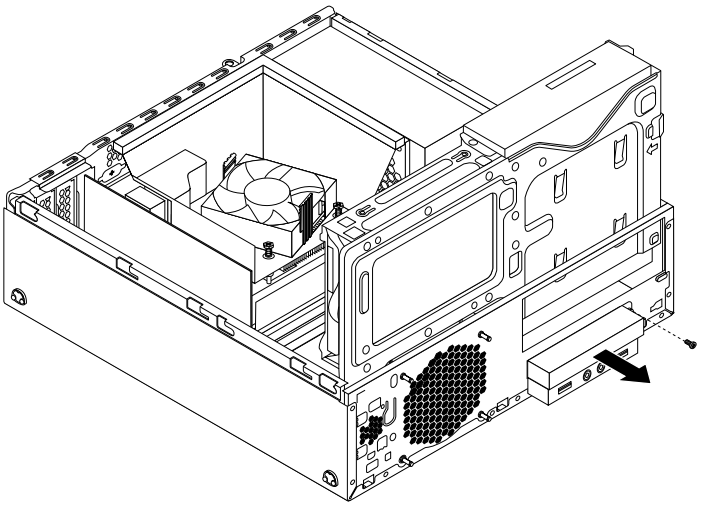

Figure 140. Removing the mSATA solid-state drive from the chassis

7. Remove the two screws that secure the mSATA solid-state drive.

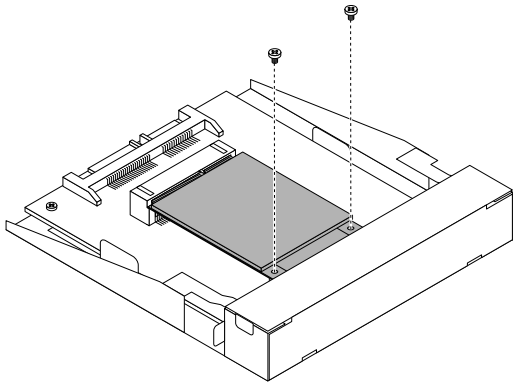

Figure 141. Removing the screws that secure the mSATA solid-state drive

8. Pull the mSATA solid-state drive out of the mini PCI Express slot on the storage converter.

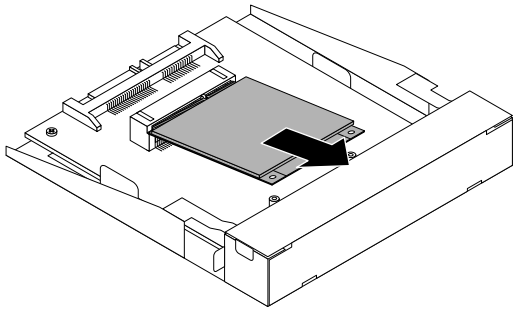

Figure 142. Removing the mSATA solid-state drive from the storage converter

9. Carefully insert the mSATA solid-state drive into the mini PCI Express slot on the storage converter at an angle of about 20 degrees. Then, press the mSATA solid-state drive downward.

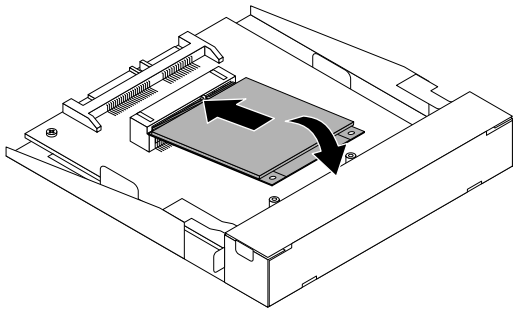

Figure 143. Installing the mSATA solid-state drive into the storage converter

10. Install the two screws that came with the mSATA solid-state drive to secure the drive to the storage converter.

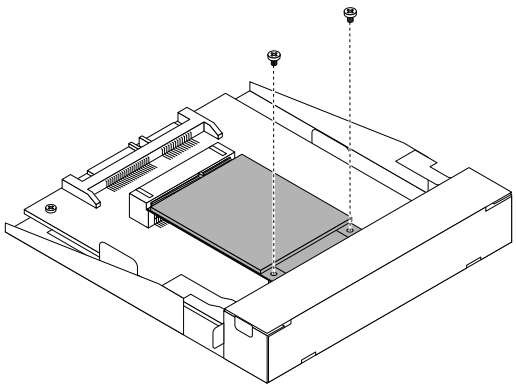

Figure 144. Installing the screws to secure the mSATA solid-state drive

11. Install the new mSATA solid-state drive into the card reader drive bay until it snaps into position. Then, push the new mSATA solid-state drive to the left until the screw hole in the metal bracket of the mSATA solid-state drive is aligned with the corresponding hole in the chassis.

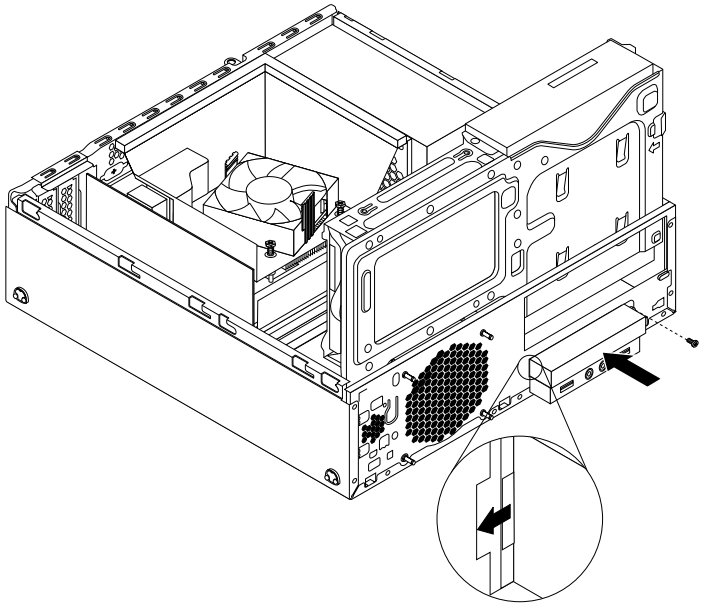

Figure 145. Installing the mSATA solid-state drive into the chassis

12. Reconnect the signal cable and the power cable to the rear of the storage converter.

What to do next:

- To work with another piece of hardware, go to the appropriate section.
- To complete the installation or replacement, go to “Completing the parts replacement” on page 234.

Replacing the power supply assembly

Attention: Do not open your computer or attempt any repair before reading and understanding the Chapter 1 “Safety information” on page 1.

This section provides instructions on how to replace the power supply assembly.

Although there are no moving parts in your computer after the power cord has been disconnected, the following warnings are required for your safety and proper Underwriters Laboratories (UL) certification.

CAUTION:

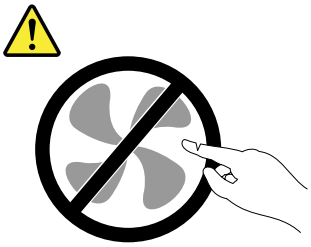

Hazardous moving parts. Keep fingers and other body parts away.

CAUTION:
Never remove the cover on a power supply or any part that has the following label attached.



Hazardous voltage, current, and energy levels are present inside any component that has this label attached. There are no serviceable parts inside these components. If you suspect a problem with one of these parts, contact a service technician.

To replace the power supply assembly, do the following:

1. Remove all media from the drives and turn off all attached devices and the computer. Then, disconnect all power cords from electrical outlets and disconnect all cables that are connected to the computer.
2. Remove the computer cover. See “Removing the computer cover” on page 159.
3. Remove the front bezel. See “Removing and reinstalling the front bezel” on page 160

4. Gently pivot the two plastic retaining clips that secure the heat sink fan duct outward, and then lift the heat sink fan duct out of the chassis.

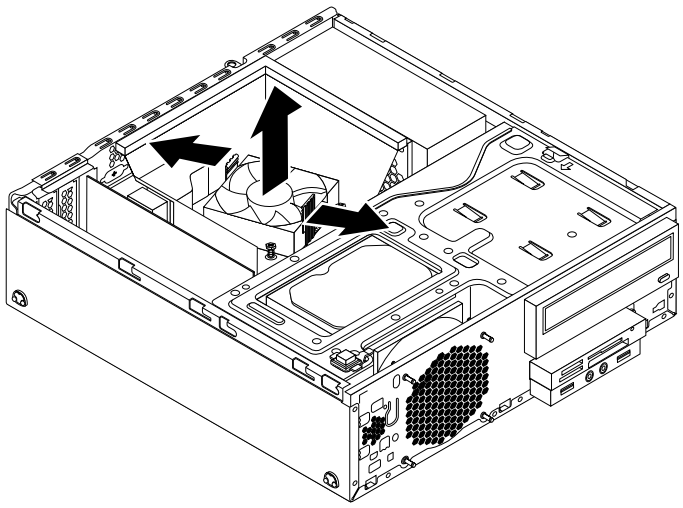

Figure 146. Removing the heat sink fan duct

5. Press the retaining clip **1** in the direction as shown and pivot the drive bay assembly upward at the same time.

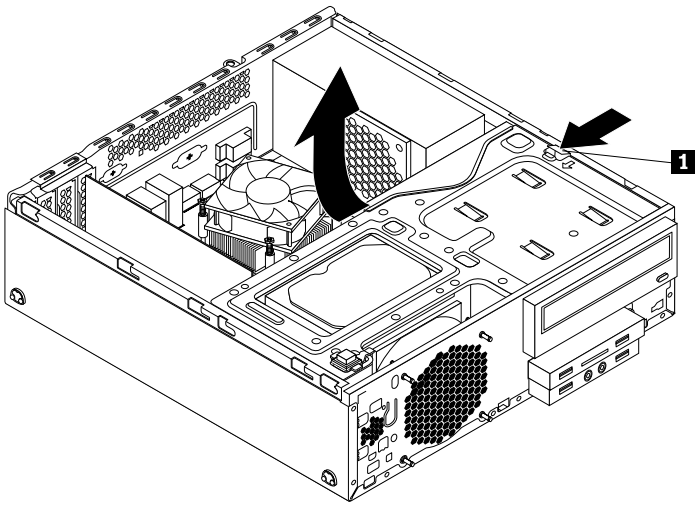

Figure 147. Pivoting the drive bay assembly upward

6. Record the cable routing and cable connections. Then, disconnect the power supply assembly cables from the system board and all drives.
7. Release the power supply assembly cables from any cable clips or ties that secure the cables to the chassis.

8. At the rear of the computer, remove the three screws that secure the power supply assembly. Press the retaining clip **1** downward and slide the power supply assembly to the front of the computer. Then, lift the power supply assembly out of the computer.

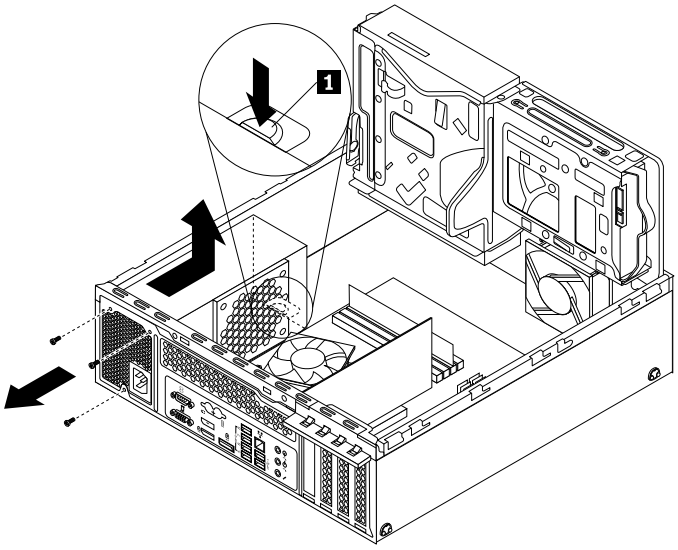

Figure 148. Removing the power supply assembly

9. Ensure that the new power supply assembly is the correct replacement.
10. Install the new power supply assembly into the chassis so that the screw holes in the new power supply assembly are aligned with the corresponding holes in the rear of the chassis. Then, install the three screws to secure the new power supply assembly.

    Note: Use only screws provided by Lenovo.

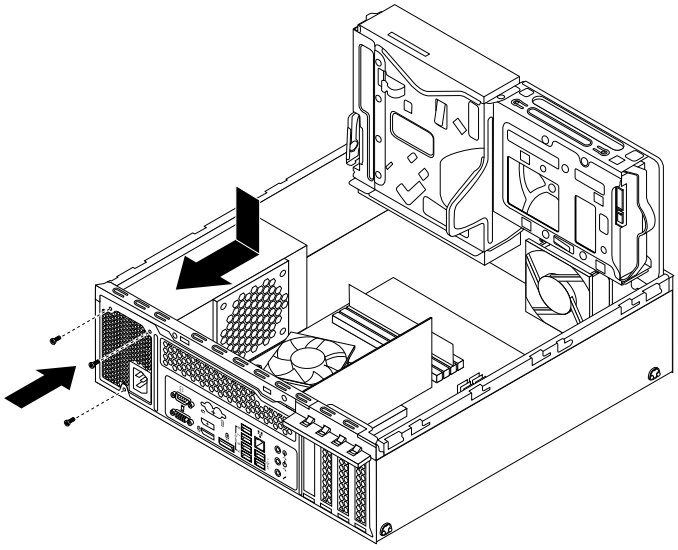

Figure 149. Installing the power supply assembly

11. Connect the new power supply assembly cables to all drives and the system board. See “Locating parts on the system board” on page 82.

What to do next:

- To work with another piece of hardware, go to the appropriate section.
- To complete the installation or replacement, go to “Completing the parts replacement” on page 234.

Replacing the power switch unit

Attention: Do not open your computer or attempt any repair before reading and understanding the Chapter 1 “Safety information” on page 1.

This section provides instructions on how to replace the power switch unit.

To replace the power switch unit, do the following:

1. Remove all media from the drives and turn off all attached devices and the computer. Then, disconnect all power cords from electrical outlets and disconnect all cables that are connected to the computer.
2. Remove the computer cover. See “Removing the computer cover” on page 159.
3. Remove the front bezel. See “Removing and reinstalling the front bezel” on page 160.
4. Press the retaining clip **1** in the direction as shown and pivot the drive bay assembly upward at the same time.

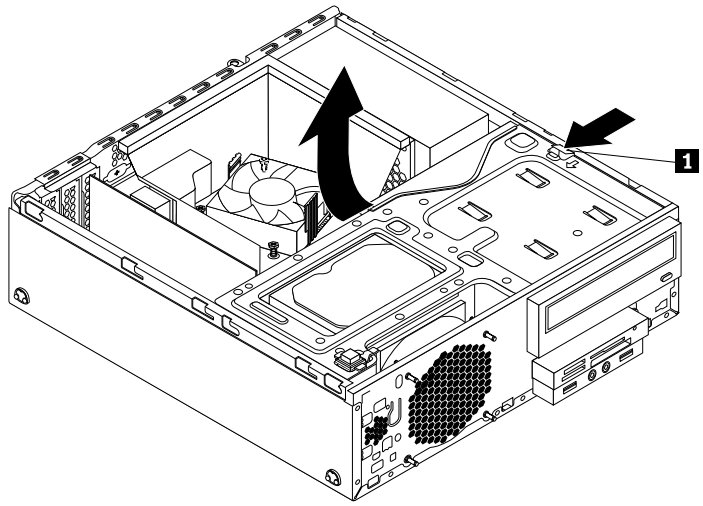

Figure 150. Pivoting the drive bay assembly upward

5. Disconnect the cable of the power switch unit from the system board.
6. Push the power switch unit inward through the hole to disengage it from the chassis.

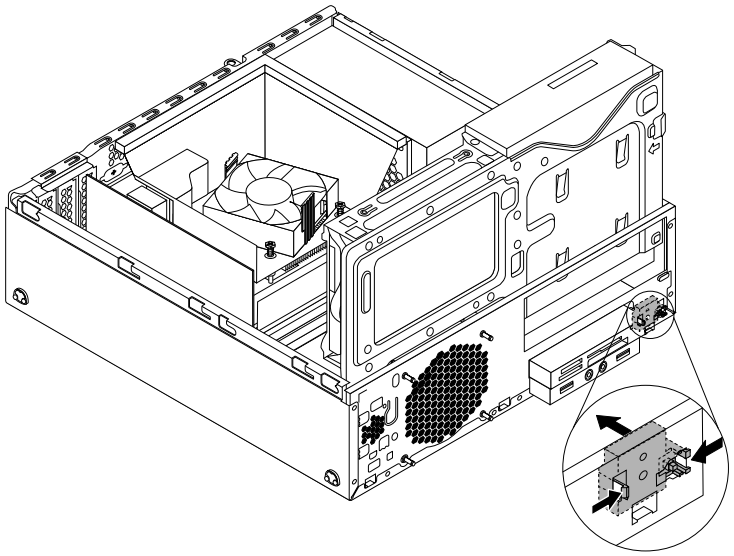

Figure 151. Removing the power switch unit

7. Insert the two plastic tabs on the side of the new power switch unit through the hole in the chassis, and then press the power switch unit as shown until it snaps into position.

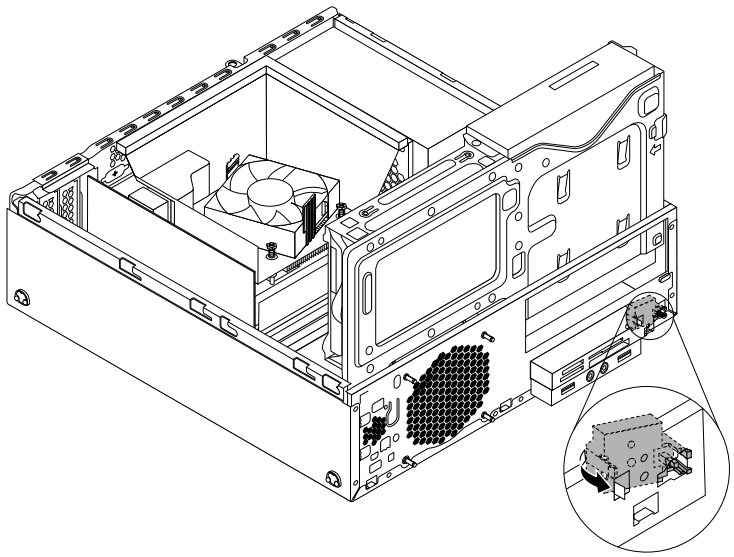

Figure 152. Installing the power switch unit

8. Connect the cable of the new power switch unit to the system board. See “Locating parts on the system board” on page 82.
9. Reinstall the front bezel. See “Removing and reinstalling the front bezel” on page 160.

What to do next:

- To work with another piece of hardware, go to the appropriate section.

- To complete the installation or replacement, go to “Completing the parts replacement” on page 234.

Replacing the heat sink and fan assembly

Attention: Do not open your computer or attempt any repair before reading and understanding the Chapter 1 “Safety information” on page 1.

This section provides instructions on how to replace the heat sink and fan assembly.

CAUTION:



The heat sink and fan assembly might be very hot. Before you open the computer cover, turn off the computer and wait several minutes until the computer is cool.

To replace the heat sink and fan assembly, do the following:

1. Remove all media from the drives and turn off all attached devices and the computer. Then, disconnect all power cords from electrical outlets and disconnect all cables that are connected to the computer.
2. Remove the computer cover. See “Removing the computer cover” on page 159.
3. Remove the front bezel. See “Removing and reinstalling the front bezel” on page 160
4. Locate the heat sink and fan assembly. See “Locating major FRUs and CRUs” on page 80
5. Pivot the two plastic retaining clips that secure the heat sink fan duct outward. Then, remove the heat sink fan duct from the failing heat sink and fan assembly.

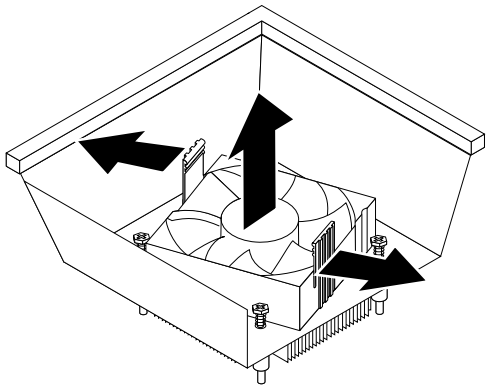

Figure 153. Removing the heat sink fan duct

6. Disconnect the cable of the heat sink and fan assembly from the system board.

7. Follow the following sequence to remove the four screws that secure the heat sink and fan assembly to the system board:
   a. Partially remove the screw 1, then fully remove the screw 2, then fully remove the screw 1.
   b. Partially remove the screw 3, then fully remove the screw 4, then fully remove the screw 3.

   Note: Carefully remove the four screws from the system board to avoid any possible damage to the system board. The four screws cannot be removed from the heat sink and fan assembly.

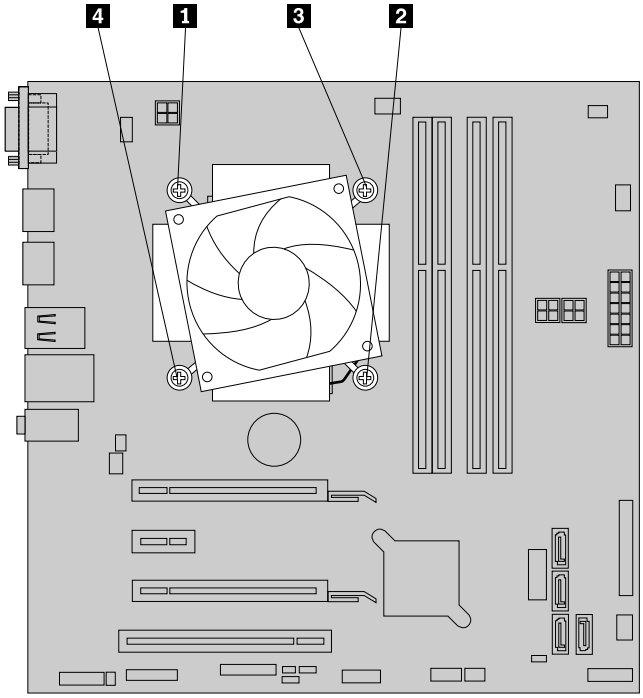

Figure 154. Removing the heat sink and fan assembly

8. Lift the heat sink and fan assembly off the system board.

   Notes:

   - You might have to gently twist the heat sink and fan assembly to free it from the microprocessor.
   - Do not touch the thermal grease while handling the heat sink and fan assembly.

9. Position the new heat sink and fan assembly on the system board so that the four screws on the new heat sink and fan assembly are aligned with the corresponding holes on the system board. Ensure that the cable of the new heat sink and fan assembly faces toward the microprocessor fan connector on the system board.
10. Follow the following sequence to install the four screws to secure the new heat sink and fan assembly. Do not over-tighten the screws.

    Notes:

    a. Partially tighten the screw 1, then fully tighten the screw 2, then fully tighten the screw 1.
    b. Partially tighten the screw 3, then fully tighten the screw 4, then fully tighten the screw 3.

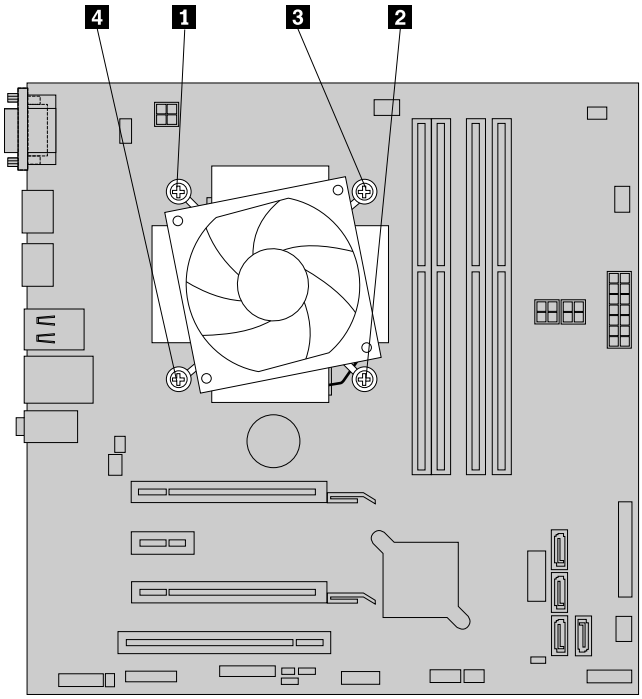

Figure 155. Removing the heat sink and fan assembly

11. Connect the cable of the new heat sink and fan assembly to the microprocessor fan connector on the system board. See “Locating parts on the system board” on page 82.
12. Position the heat sink fan duct on the top of the new heat sink and fan assembly as shown. Then, press the heat sink fan duct straight down until it snaps into position.

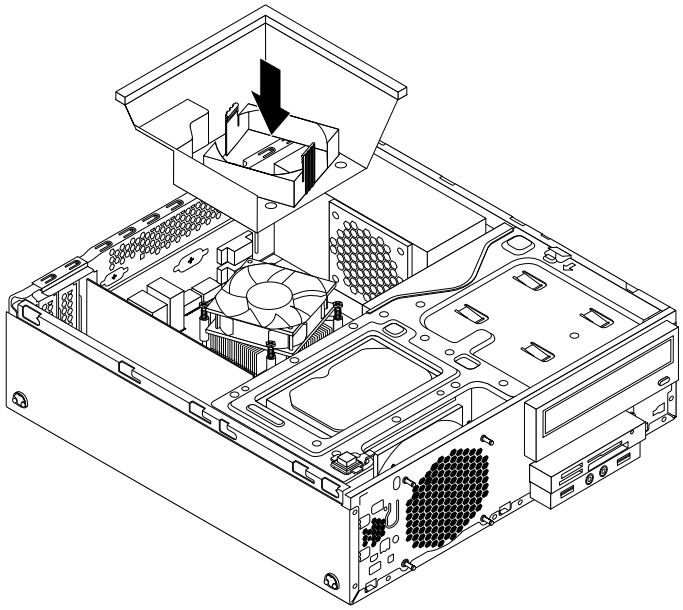

Figure 156. Installing the heat sink fan duct

What to do next:

- To work with another piece of hardware, go to the appropriate section.
- To complete the installation or replacement, go to “Completing the parts replacement” on page 234.

Replacing the microprocessor

Attention: Do not open your computer or attempt any repair before reading and understanding the Chapter 1 “Safety information” on page 1.

This section provides instructions on how to replace the microprocessor.

CAUTION:



The heat sink and microprocessor might be very hot. Before you open the computer cover, turn off the computer and wait several minutes until the computer is cool.

To replace the microprocessor, do the following:

1. Remove all media from the drives and turn off all attached devices and the computer. Then, disconnect all power cords from electrical outlets and disconnect all cables that are connected to the computer.
2. Remove the computer cover. See “Removing the computer cover” on page 159.
3. Remove the front bezel. See “Removing and reinstalling the front bezel” on page 160
4. Press the retaining clip 1 in the direction as shown and pivot the drive bay assembly upward at the same time.

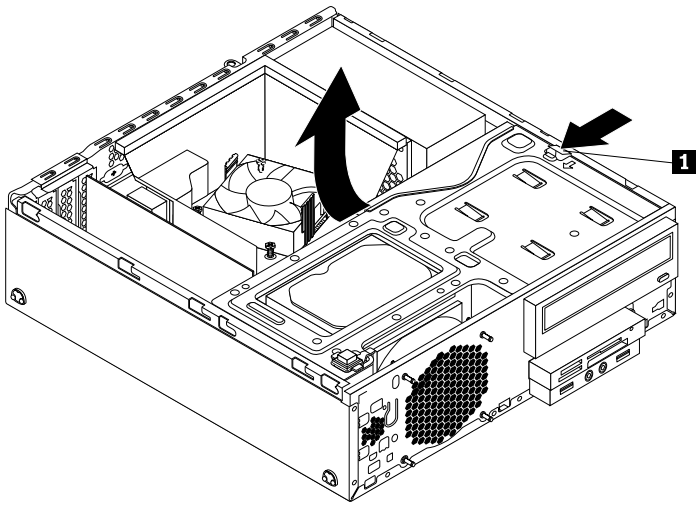

Figure 157. Pivoting the drive bay assembly upward

5. Remove the heat sink and fan assembly. See “Replacing the heat sink and fan assembly” on page 191.

   Note: Do not let the thermal grease on the bottom of the heat sink and fan assembly get in contact with anything.
6. Record the cable routing and connections. Then, locate the system board and disconnect all cables connected to the system board. See “Locating parts on the system board” on page 82.

7. Lift the small handle 1 and open the retainer 2 to access the microprocessor 3.

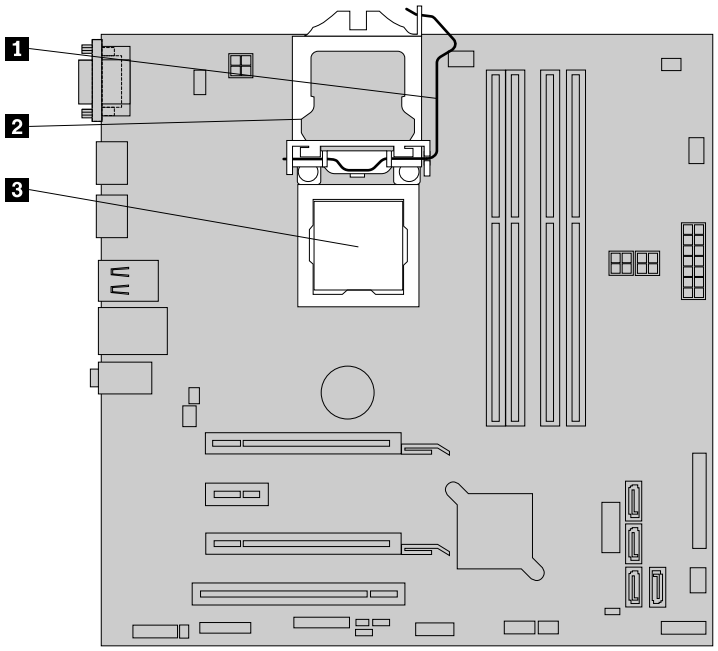

Figure 158. Accessing the microprocessor

8. Carefully lift the microprocessor straight up and out of the microprocessor socket.

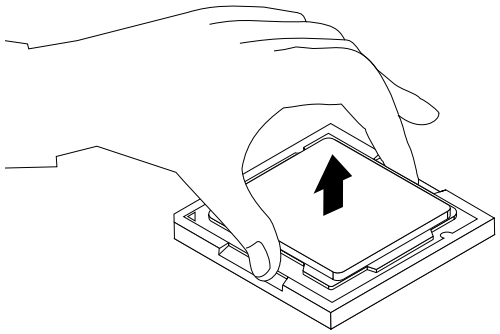

Figure 159. Removing the microprocessor

Notes:

- Your microprocessor and socket might look different from the one illustrated.
- Touch only the edges of the microprocessor. Do not touch the gold contacts on the bottom of the microprocessor.
- Do not drop anything onto the microprocessor socket while it is exposed. The socket pins must be kept as clean as possible.

9. Ensure that the small handle is in the raised position and the microprocessor retainer is fully open.
10. Remove the protective cover that protects the gold contacts of the new microprocessor.

11. Note the orientation of the new microprocessor. Hold the new microprocessor by its edges and align the notches 1 on it with the tabs 2 in the microprocessor socket. Then, carefully lower the new microprocessor straight down into the microprocessor socket.

    Note: The small triangle 3 on one corner of the new microprocessor is the microprocessor orientation indicator. The new microprocessor is in the correct orientation when this indicator faces the beveled corner 4 of the microprocessor socket.

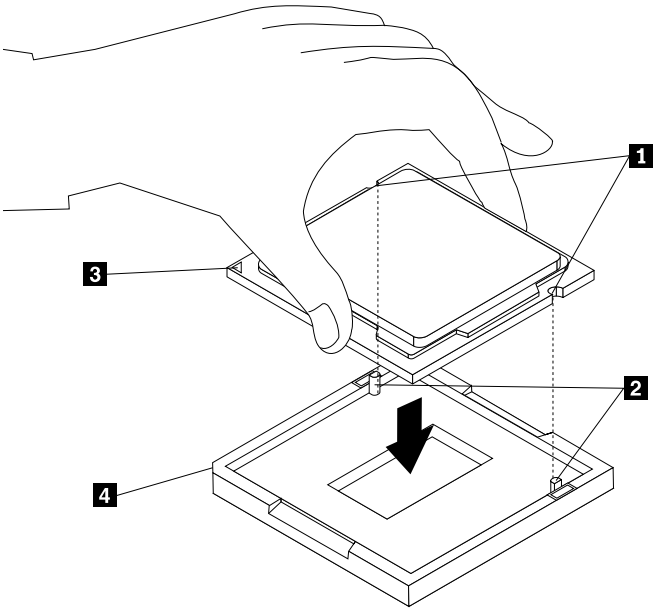

Figure 160. Installing the microprocessor

12. Close the microprocessor retainer and lock it into position with the small handle to secure the new microprocessor in the socket.
13. Reinstall the heat sink and fan assembly. See “Replacing the heat sink and fan assembly” on page 191.
14. Reconnect all cables that were disconnected from the system board. See “Locating parts on the system board” on page 82

What to do next:

- To work with another piece of hardware, go to the appropriate section.
- To complete the installation or replacement, go to “Completing the parts replacement” on page 234.

Replacing the system board

Attention: Do not open your computer or attempt any repair before reading and understanding the Chapter 1 “Safety information” on page 1.

This section provides instructions on how to replace the system board.

CAUTION:



The heat sink and microprocessor might be very hot. Before you open the computer cover, turn off the computer and wait several minutes until the computer is cool.

To replace the system board, do the following:

1. Remove all media from the drives and turn off all attached devices and the computer. Then, disconnect all power cords from electrical outlets and disconnect all cables that are connected to the computer.
2. Remove the computer cover. See “Removing the computer cover” on page 159.
3. Remove the front bezel. See “Removing and reinstalling the front bezel” on page 160
4. Press the retaining clip **1** in the direction as shown and pivot the drive bay assembly upward at the same time.

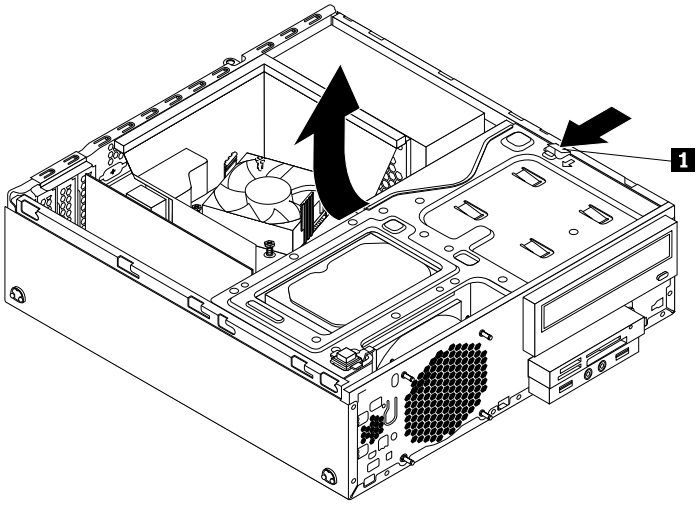

Figure 161. Pivoting the drive bay assembly upward

5. Remove all memory modules and PCI cards that are currently installed. See “Installing or replacing a memory module” on page 164 and “Installing or replacing a PCI card” on page 162.
6. Remove the heat sink and fan assembly from the failing system board. See “Replacing the heat sink and fan assembly” on page 191.

   Note: Do not let the thermal grease on the bottom of the heat sink and fan assembly get in contact with anything.
7. Record the cable routing and cable connections and then disconnect all cables from the system board.
8. Remove the eight screws that secure the system board by following the sequence shown in the following illustration.

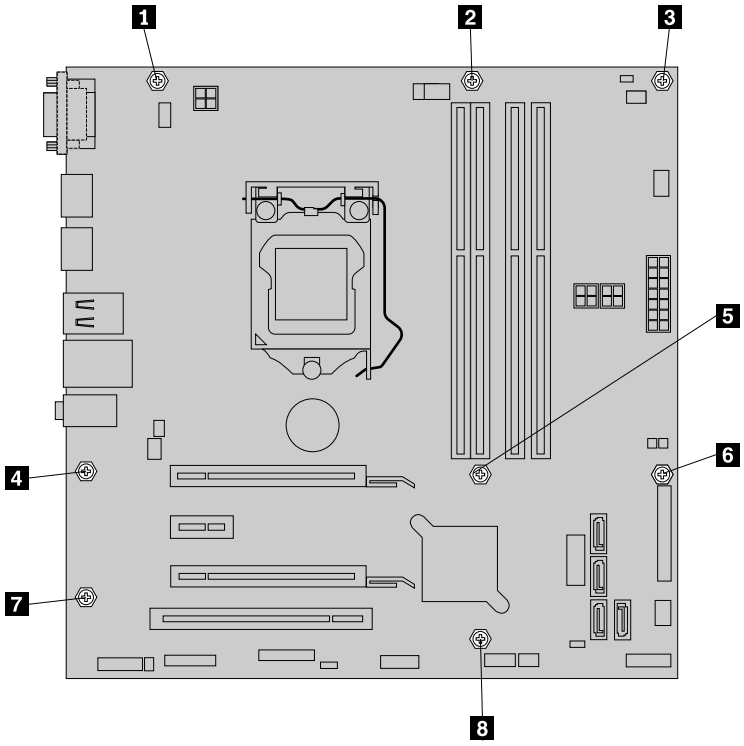

Figure 162. Removing the eight screws that secure the system board

9. Slide the system board to the front of the computer and then carefully lift the system board out of the chassis.
10. Remove the microprocessor from the failing system board and install it on the new system board. See “Replacing the microprocessor” on page 194.
11. Install the new system board into the chassis by aligning the eight screw holes in the new system board with the corresponding mounting studs on the chassis. Then, install the eight screws to secure the system board by following the sequence shown in the following illustration.

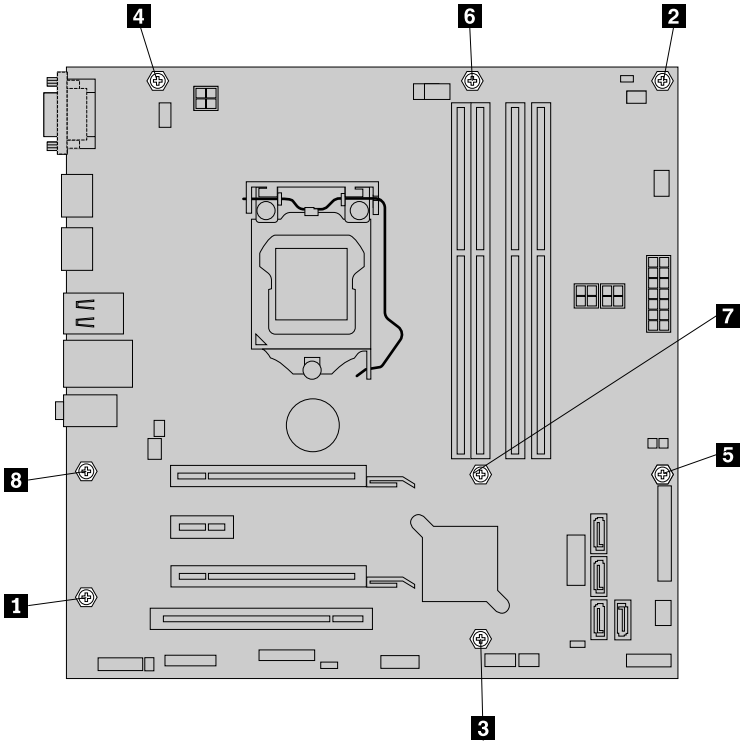

Figure 163. Installing the eight screws to secure the system board

12. Install the heat sink and fan assembly and connect the heat sink and fan assembly cable to the new system board. See “Replacing the heat sink and fan assembly” on page 191.
13. Install all memory modules and PCI cards removed from the failing system board onto the new system board. See “Installing or replacing a memory module” on page 164 and “Installing or replacing a PCI card” on page 162.
14. Refer to your record to connect cables to the new system board. You also can refer to “Locating parts on the system board” on page 82 to help you locate the connectors on the system board and connect cables.
15. To complete the replacement, go to “Completing the parts replacement” on page 234.

The failing system board must be returned with a microprocessor socket cover to protect the pins during shipping and handling.

To install the microprocessor socket cover, do the following:

1. After you have removed the microprocessor from the failing system board, close the microprocessor retainer and then put the lever to the locked position to secure the retainer in place.
2. Note the orientation of the socket cover, and install one side of the socket cover into the microprocessor socket. Carefully press the other side of the socket cover downward until the socket cover snaps into position.

   Note: Your microprocessor socket and cover might look slightly different from the illustration.

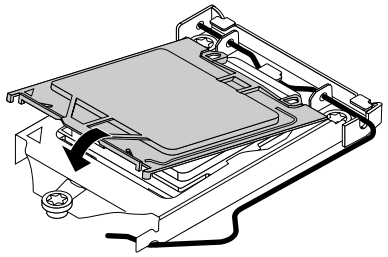

Figure 164. Installing the microprocessor socket cover

3. Carefully check the four corners of the socket cover to ensure that the cover is secured.
4. Follow any additional instructions that are included with the replacement part you received.

What to do next:

- To work with another piece of hardware, go to the appropriate section.
- To complete the installation or replacement, go to "Completing the parts replacement" on page 234.

Replacing the cover presence switch

Attention: Do not open your computer or attempt any repair before reading and understanding the Chapter 1 "Safety information" on page 1.

This section provides instructions on how to replace the cover presence switch, which is also known as intrusion switch.

To replace the cover presence switch, do the following:

1. Remove all media from the drives and turn off all attached devices and the computer. Then, disconnect all power cords from electrical outlets and disconnect all cables that are connected to the computer.
2. Remove the computer cover. See "Removing the computer cover" on page 159.
3. Remove the front bezel. See "Removing and reinstalling the front bezel" on page 160
4. Locate the cover presence switch. See "Locating major FRUs and CRUs" on page 80.
5. Disconnect the cover presence switch cable from the cover presence switch connectors on the system board.

6. Press the clip **1** as shown and lift the cover presence switch up to remove it from the chassis.

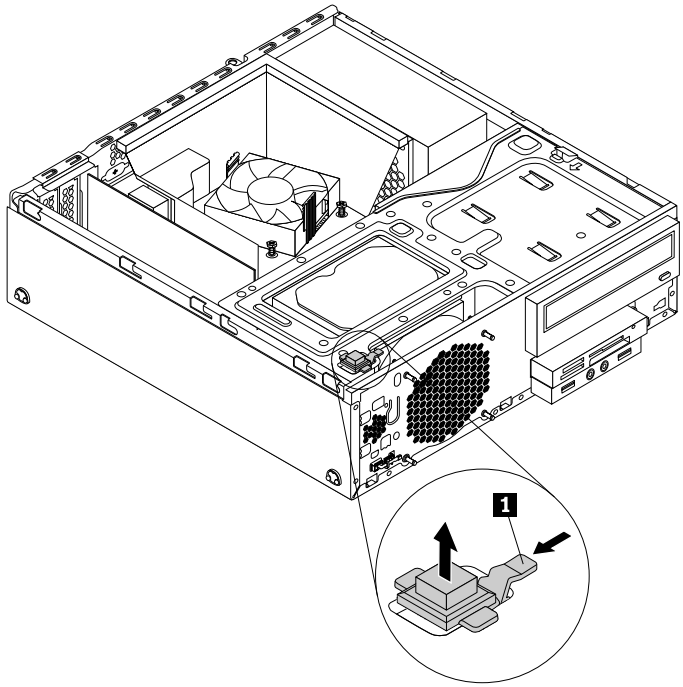

Figure 165. Removing the cover presence switch

7. Put the new cover presence switch into the hole and press it down until it snaps into position.

   Note: Note the orientation of the cover presence switch.

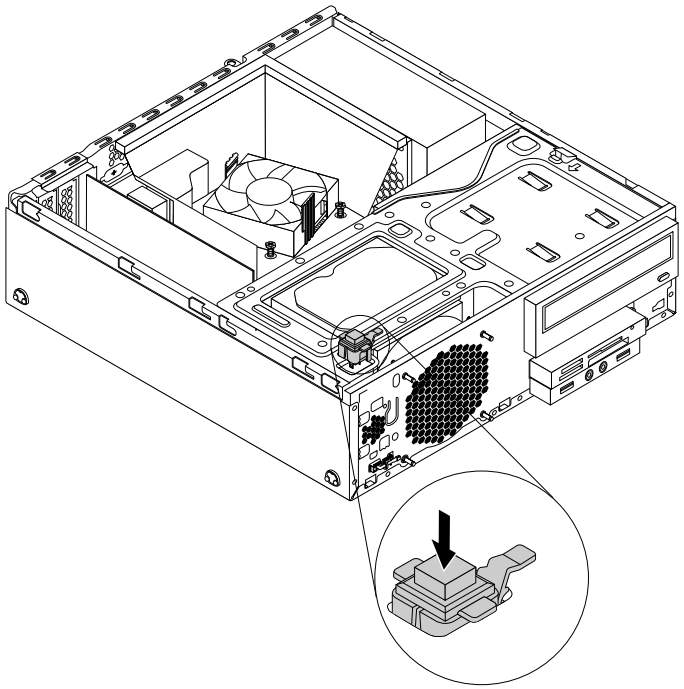

Figure 166. Installing the cover presence switch

8. Connect the cable of the new cover presence switch to the cover presence switch connector on the system board. See “Locating parts on the system board” on page 82.

What to do next:

- To work with another piece of hardware, go to the appropriate section.
- To complete the installation or replacement, go to “Completing the parts replacement” on page 234.

Replacing the primary hard disk drive

Attention: Do not open your computer or attempt any repair before reading and understanding the Chapter 1 “Safety information” on page 1.

This section provides instructions on how to replace the primary hard disk drive.

To replace the primary hard disk drive, do the following:

1. Remove all media from the drives and turn off all attached devices and the computer. Then, disconnect all power cords from electrical outlets and disconnect all cables that are connected to the computer.
2. Remove the computer cover. See “Removing the computer cover” on page 159.
3. Remove the front bezel. See “Removing and reinstalling the front bezel” on page 160

4. Press the retaining clip 1 in the direction as shown and pivot the drive bay assembly upward at the same time.

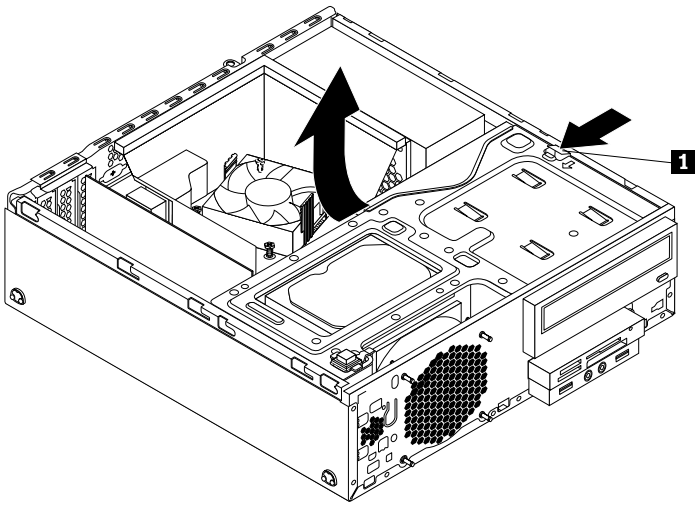

Figure 167. Pivoting the drive bay assembly upward

5. Locate the primary hard disk drive. See “Locating major FRUs and CRUs” on page 80.
6. Disconnect the signal cable and the power cable from the primary hard disk drive.
7. Pull on the blue handle to slide the primary hard disk drive out of the drive bay.

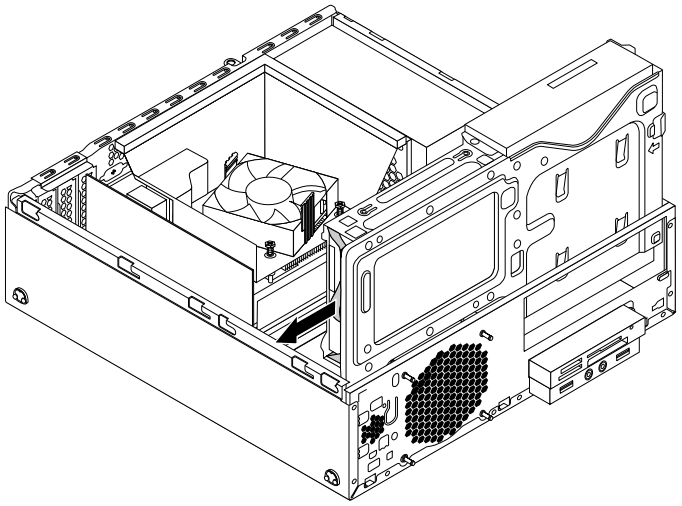

Figure 168. Removing the primary hard disk drive

8. Flex the sides of the blue bracket to remove the primary hard disk drive from the bracket.

9. To install a new hard disk drive into the blue bracket, flex the bracket and align pin 1, pin 2, pin 3, and pin 4 on the bracket with the corresponding holes in the hard disk drive. Do not touch the circuit board 5 on the bottom of the hard disk drive.

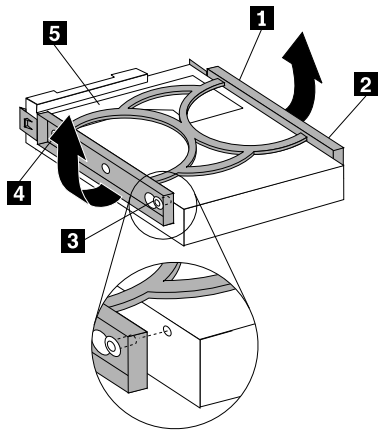

Figure 169. Installing the hard disk drive into the bracket

10. Slide the new primary hard disk drive with bracket into the primary hard disk drive bay until it snaps into position.

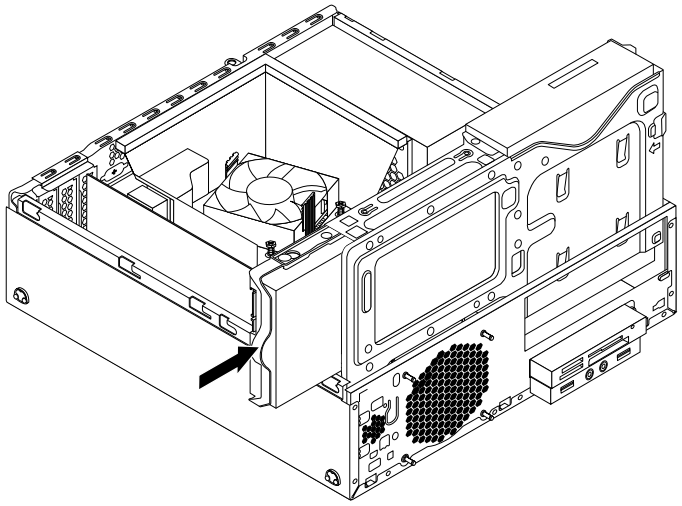

Figure 170. Installing the primary hard disk drive

11. Connect the signal cable and the power cable to the new primary hard disk drive.

What to do next:

- To work with another piece of hardware, go to the appropriate section.
- To complete the installation or replacement, go to “Completing the parts replacement” on page 234.

Installing or replacing the secondary hard disk drive

This section provides instructions on how to install or replace the secondary hard disk drive.

Note: The secondary hard disk drive is only available in some models.

Installing the secondary hard disk drive

Attention: Do not open your computer or attempt any repair before reading and understanding the Chapter 1 “Safety information” on page 1.

To install the secondary hard disk drive, do the following:

1. Remove all media from the drives and turn off all attached devices and the computer. Then, disconnect all power cords from electrical outlets and disconnect all cables that are connected to the computer.
2. Remove the computer cover. See “Removing the computer cover” on page 159.
3. Remove the front bezel. See “Removing and reinstalling the front bezel” on page 160
4. Press the retaining clip **1** in the direction as shown and pivot the drive bay assembly upward at the same time.

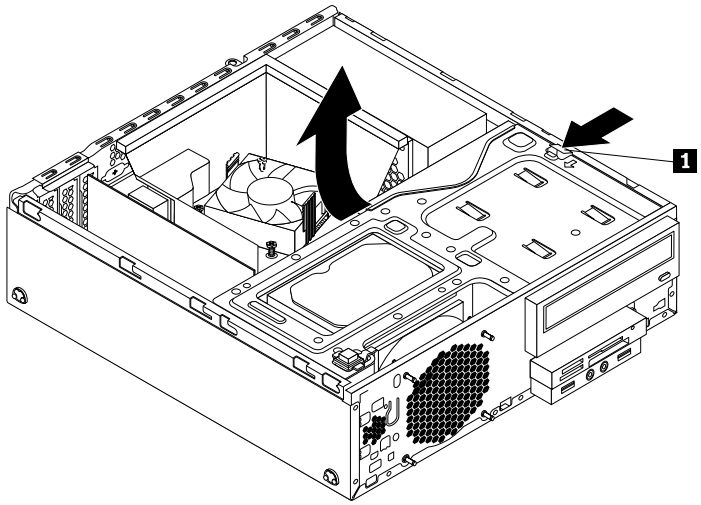

Figure 171. Pivoting the drive bay assembly upward

5. Remove the cable clip on the bottom of the primary hard disk drive bay as shown.

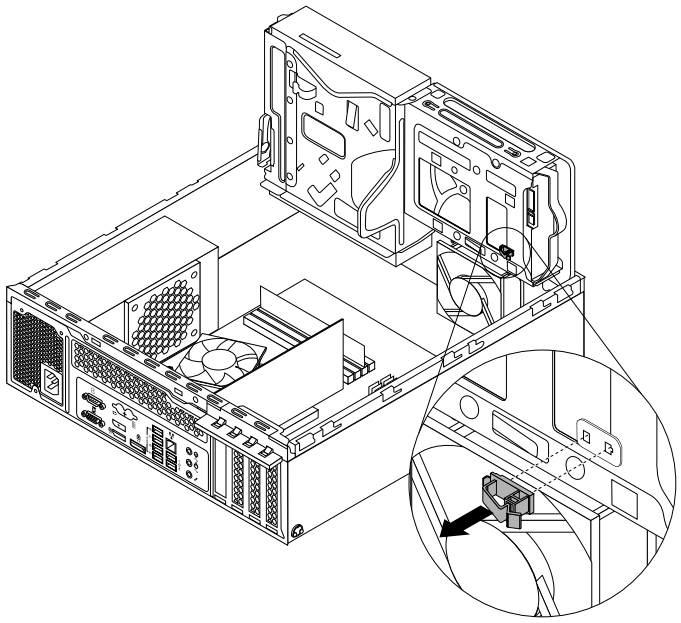

Figure 172. Removing the cable clip

6. Align the four holes in the secondary hard disk drive carrier with the corresponding four tabs on the bottom of the primary hard disk drive bay as shown. Then, position the carrier onto the bottom of the primary hard disk drive bay so that the tabs on the bay pass through the holes in the carrier.

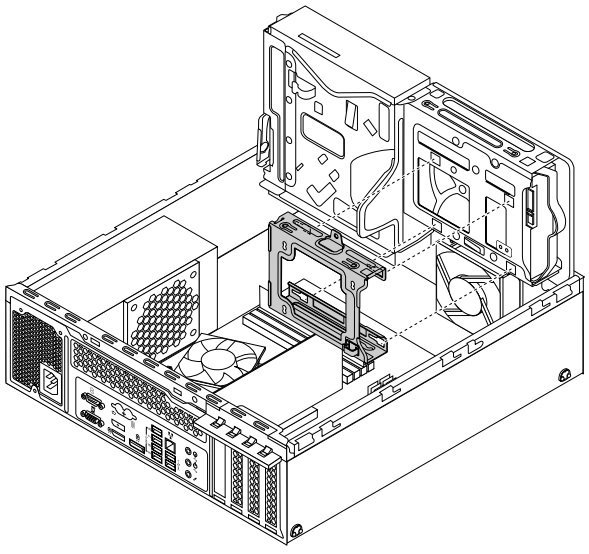

Figure 173. Positioning the carrier onto the bottom of the primary hard disk drive bay

7. Slide the secondary hard disk drive carrier to the left of the chassis until it snaps into position and the screw hole 1 in the carrier is aligned with the screw hole 2 in the bay.

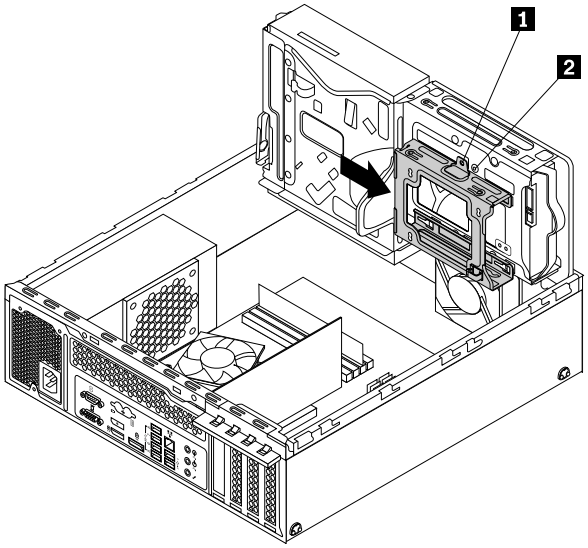

Figure 174. Installing the secondary hard disk drive carrier

8. Install the screw to secure the secondary hard disk drive carrier to the chassis.

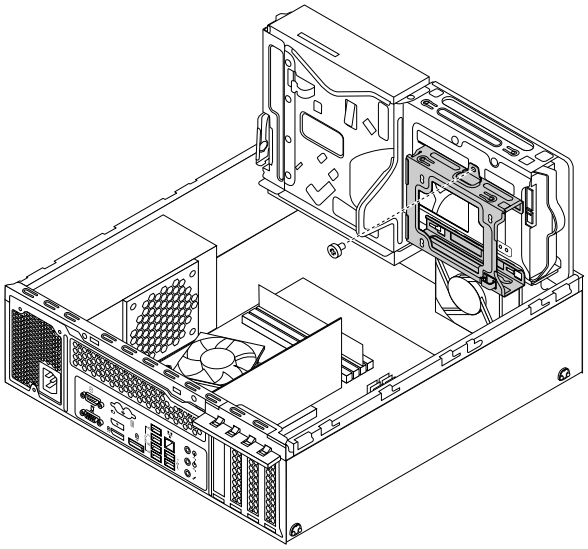

Figure 175. Installing the screw to secure the secondary hard disk drive carrier

9. Flex the sides of the blue bracket to remove the primary hard disk drive from the bracket.

10. To install a new hard disk drive into the blue bracket, flex the bracket and align pin 1, pin 2, pin 3, and pin 4 on the bracket with the corresponding holes in the hard disk drive. Do not touch the circuit board 5 on the bottom of the hard disk drive.

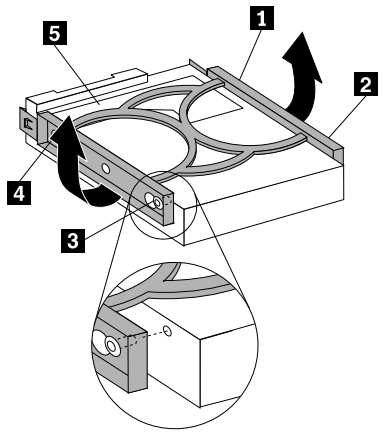

Figure 176. Installing the hard disk drive into the bracket

11. Slide the new secondary hard disk drive into the carrier until it snaps into position.

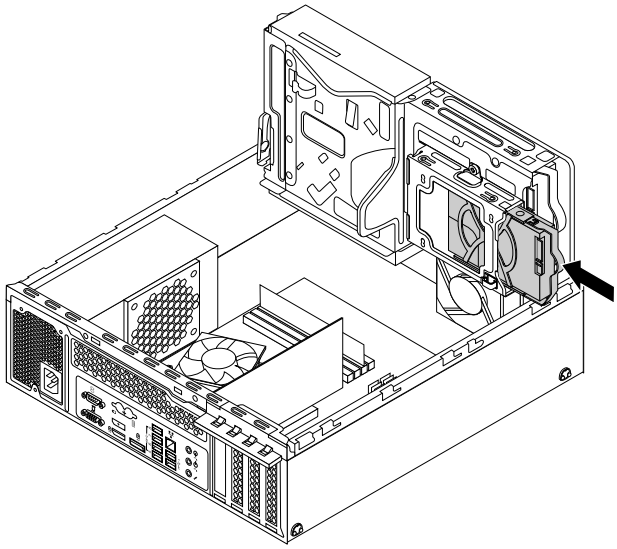

Figure 177. Installing the secondary hard disk drive

12. Connect the signal cable and the power cable to the new secondary hard disk drive.

What to do next:

- To work with another piece of hardware, go to the appropriate section.
- To complete the installation or replacement, go to “Completing the parts replacement” on page 234.

Replacing the secondary hard disk drive

Attention: Do not open your computer or attempt any repair before reading and understanding the Chapter 1 “Safety information” on page 1.

This section provides instructions on how to replace the secondary hard disk drive.

To replace the secondary hard disk drive, do the following:

1. Remove all media from the drives and turn off all attached devices and the computer. Then, disconnect all power cords from electrical outlets and disconnect all cables that are connected to the computer.
2. Remove the computer cover. See “Removing the computer cover” on page 159.
3. Remove the front bezel. See “Removing and reinstalling the front bezel” on page 160
4. Press the retaining clip **1** in the direction as shown and pivot the drive bay assembly upward at the same time.

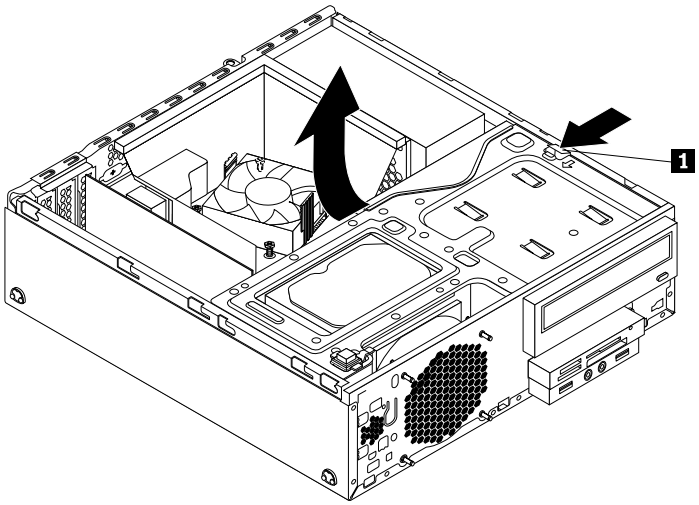

Figure 178. Pivoting the drive bay assembly upward

5. Locate the secondary hard disk drive bay. See “Locating major FRUs and CRUs” on page 80.
6. Disconnect the signal cable and the power cable from the primary hard disk drive and secondary hard disk drive.

7. Pull the blue handle to slide the secondary hard disk drive out of the carrier.

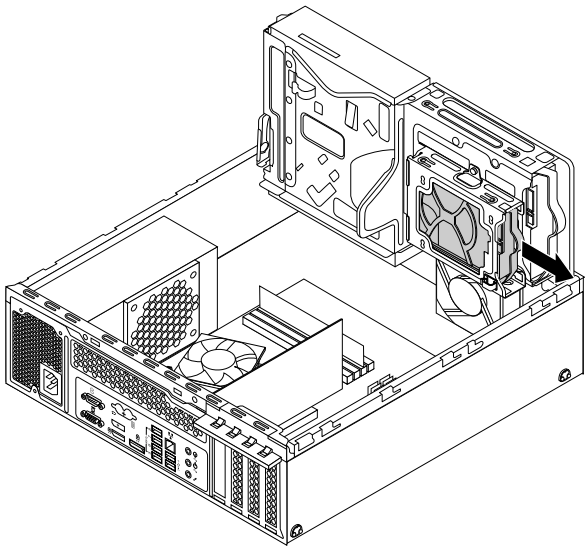

Figure 179. Removing the secondary hard disk drive

8. To install a new hard disk drive into the blue bracket, flex the bracket and align pin **1**, pin **2**, pin **3**, and pin **4** on the bracket with the corresponding holes in the hard disk drive. Do not touch the circuit board **5** on the bottom of the hard disk drive.

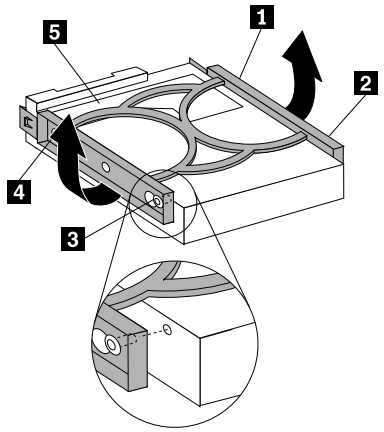

Figure 180. Installing the hard disk drive into the bracket

9. Slide the new secondary hard disk drive into the carrier until it snaps into position.

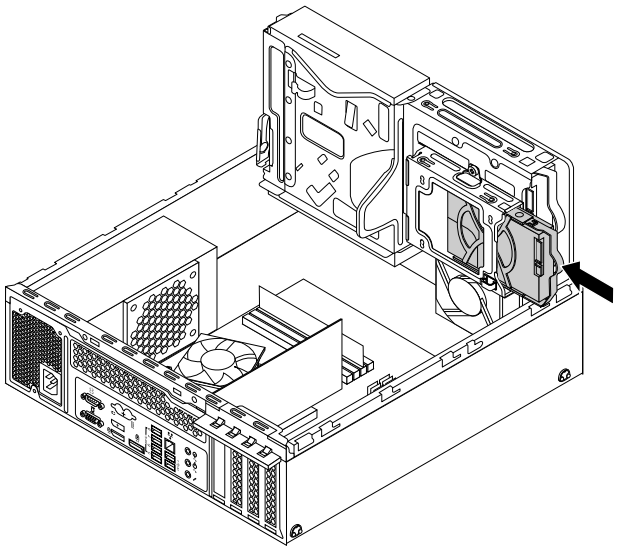

Figure 181. Installing the secondary hard disk drive

10. Connect the signal cable and the power cable to the primary hard disk drive and the new secondary hard disk drive.

What to do next:

- To work with another piece of hardware, go to the appropriate section.
- To complete the installation or replacement, go to "Completing the parts replacement" on page 234.

Installing the solid-state drive

Attention: Do not open your computer or attempt any repair before reading and understanding the Chapter 1 "Safety information" on page 1.

This section provides instructions on how to install the 2.5-inch solid-state drive.

To install the solid-state drive, do the following:

1. Install the solid-state drive into the adapter. Then, install the four screws to secure the solid-state drive to the adapter.

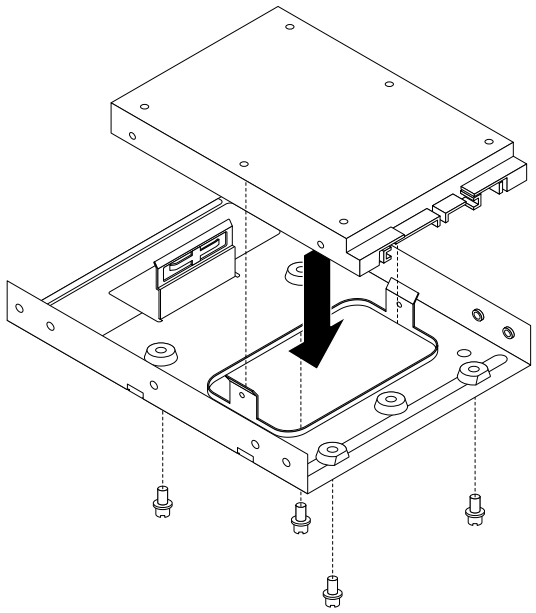

Figure 182. Installing the solid-state drive into the adapter

2. To install the adapter with a solid-state drive into the blue bracket, flex the bracket and align pin 1, pin 2, pin 3, and pin 4 on the bracket with the corresponding holes in the adapter. Do not touch the circuit board 5 on the bottom of the solid-state drive.

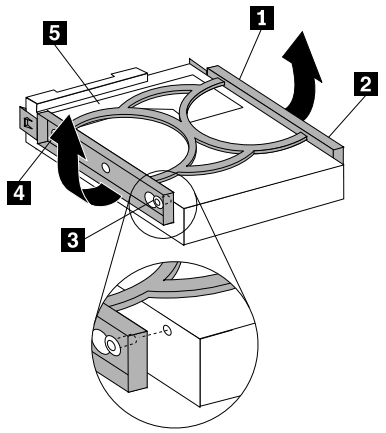

Figure 183. Installing the adapter with a solid-state drive into the bracket

3. Install the solid-state drive assembly into the hard disk drive bay. See “Replacing the primary hard disk drive” on page 202.

What to do next:

- To work with another piece of hardware, go to the appropriate section.
- To complete the installation or replacement, go to “Completing the parts replacement” on page 234.

Replacing the front fan assembly

Attention: Do not open your computer or attempt any repair before reading and understanding the Chapter 1 “Safety information” on page 1.

This section provides instructions on how to replace the front fan assembly.

To replace the front fan assembly, do the following:

1. Remove all media from the drives and turn off all attached devices and the computer. Then, disconnect all power cords from electrical outlets and disconnect all cables that are connected to the computer.
2. Remove the computer cover. See “Removing the computer cover” on page 159.
3. Remove the front bezel. See “Removing and reinstalling the front bezel” on page 160
4. Press the retaining clip 1 in the direction as shown and pivot the drive bay assembly upward at the same time.

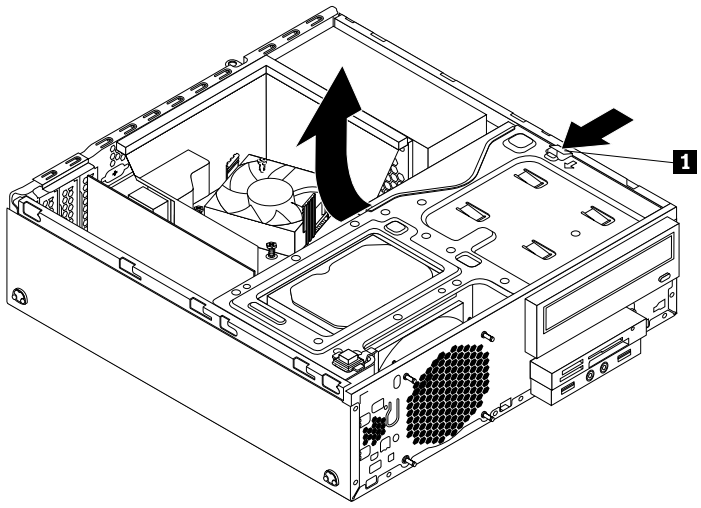

Figure 184. Pivoting the drive bay assembly upward

5. Disconnect the front fan assembly cable from the system fan connector on the system board.

   Note: For easier access to the system fan connector on the system board, you might need to remove the heat sink fan duct. See “Replacing the heat sink and fan assembly” on page 191.

6. The front fan assembly is attached to the chassis by four rubber mounts. Remove the front fan assembly by breaking or cutting the rubber mounts and gently pulling the front fan assembly out of the chassis.

   Note: The new front fan assembly comes with four new rubber mounts attached.

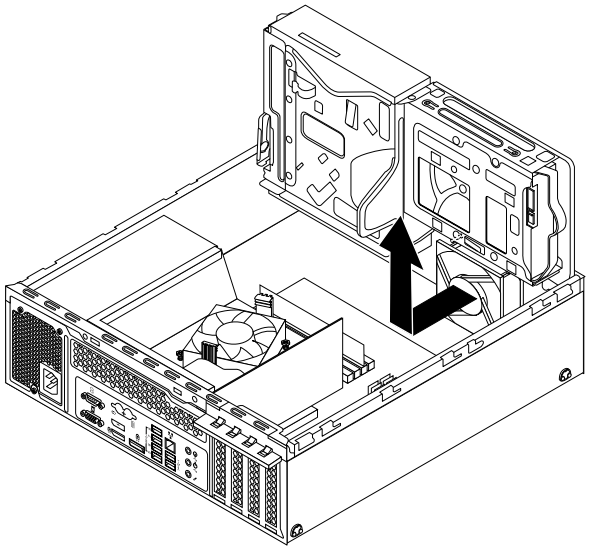

Figure 185. Removing the front fan assembly

7. Install the new front fan assembly by aligning the four new rubber mounts on the new front fan assembly with the corresponding holes in the chassis and push the rubber mounts through the holes. Pull the tip of each rubber mount from the outer side of the front panel until all rubber mounts go through the holes and secure the front fan assembly in place.

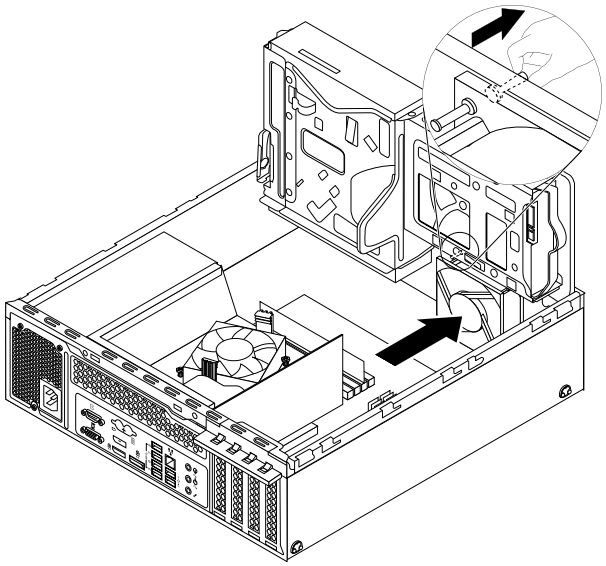

Figure 186. Installing the front fan assembly

8. Connect the cable of the new front fan assembly to the power fan connector on the system board. See “Locating parts on the system board” on page 82.

What to do next:

- To work with another piece of hardware, go to the appropriate section.
- To complete the installation or replacement, go to “Completing the parts replacement” on page 234.

Replacing the front audio and USB assembly

Attention: Do not open your computer or attempt any repair before reading and understanding the Chapter 1 “Safety information” on page 1.

This section provides instructions on how to replace the front audio and USB assembly.

To replace the front audio and USB assembly, do the following:

1. Remove all media from the drives and turn off all attached devices and the computer. Then, disconnect all power cords from electrical outlets and disconnect all cables that are connected to the computer.
2. Remove the computer cover. See “Removing the computer cover” on page 159.
3. Remove the front bezel. See “Removing and reinstalling the front bezel” on page 160
4. Locate the front audio and USB assembly. See “Locating major FRUs and CRUs” on page 80.
5. Press the retaining clip **1** in the direction as shown and pivot the drive bay assembly upward at the same time.

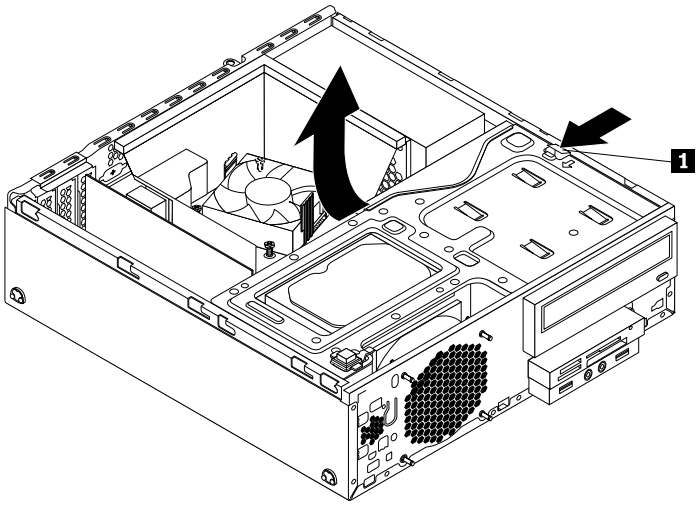

Figure 187. Pivoting the drive bay assembly upward

6. Disconnect the front audio and USB assembly cables from the system board.

7. Remove the screw that secures the front audio and USB assembly. Then, remove the front audio and USB assembly from the chassis.

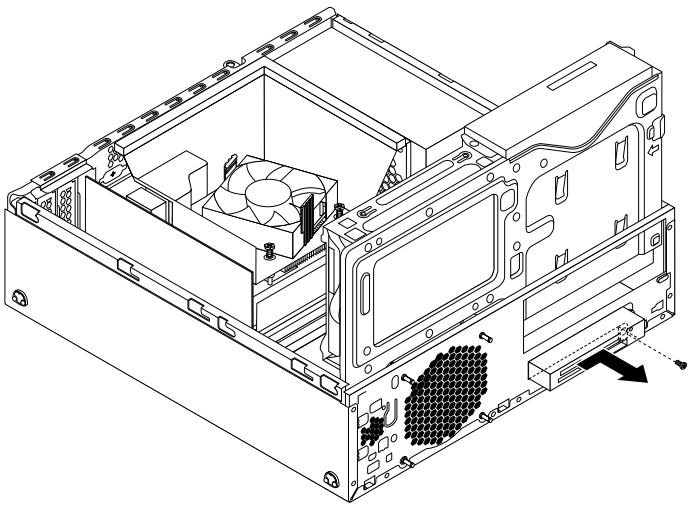

Figure 188. Removing the front audio and USB assembly

8. Install the new front audio and USB assembly into the chassis until it snaps into position. Then, push the new front audio and USB assembly to the left until the screw hole in the metal bracket of the front audio and USB assembly is aligned with the corresponding hole in the chassis.

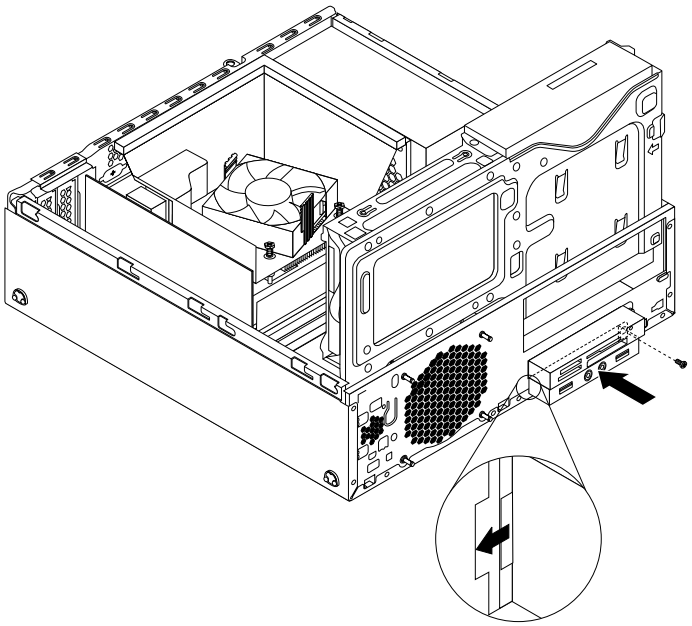

Figure 189. Installing the front audio and USB assembly

9. Connect the cables of the new front audio and USB assembly cables to the front audio connector and the front USB connector 1 on the system board. See “Locating parts on the system board” on page 82.

What to do next:

- To work with another piece of hardware, go to the appropriate section.

- To complete the installation or replacement, go to “Completing the parts replacement” on page 234.

Replacing the internal speaker

Attention: Do not open your computer or attempt any repair before reading and understanding the Chapter 1 “Safety information” on page 1.

This section provides instructions on how to replace the internal speaker.

Note: The internal speaker is only available in some models.

To replace the internal speaker, do the following:

1. Remove all media from the drives and turn off all attached devices and the computer. Then, disconnect all power cords from electrical outlets and disconnect all cables that are connected to the computer.
2. Remove the computer cover. See “Removing the computer cover” on page 159.
3. Remove the front bezel. See “Removing and reinstalling the front bezel” on page 160
4. Press the retaining clip **1** in the direction as shown and pivot the drive bay assembly upward at the same time.

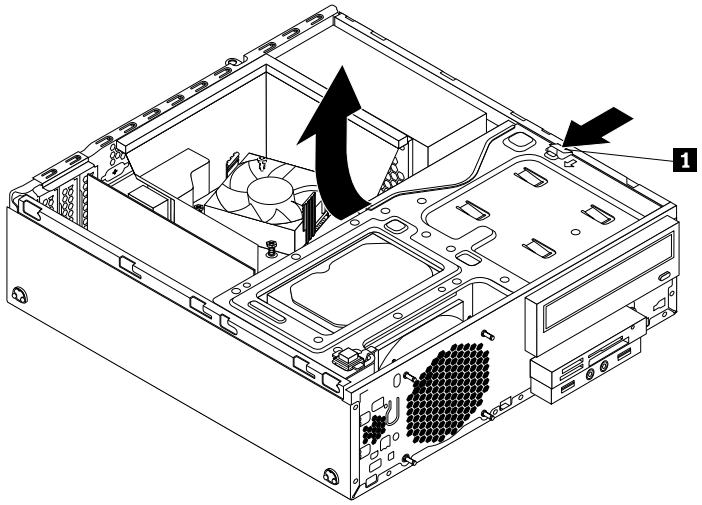

Figure 190. Pivoting the drive bay assembly upward

5. Disconnect the cable of the internal speaker from the internal speaker connector on the system board.

6. Press the tab 1 on the inner side of the front panel and slide the internal speaker towards the front fan assembly to remove it.

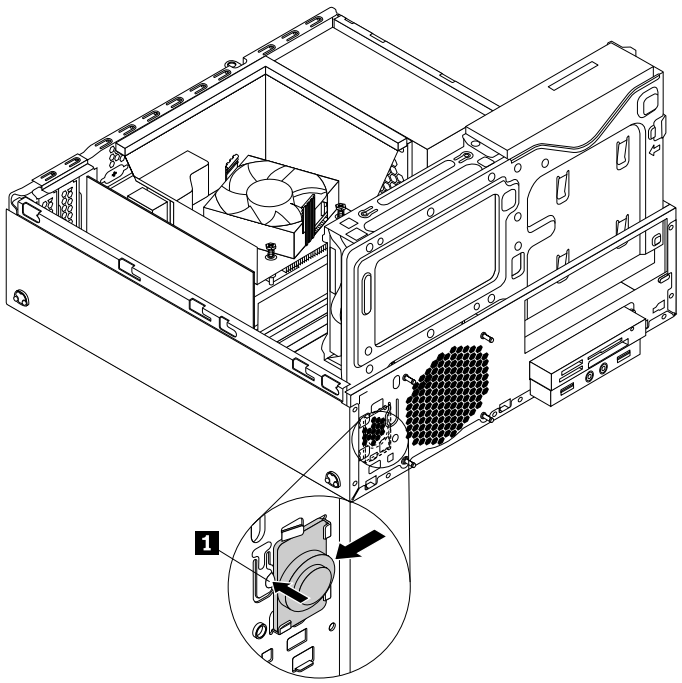

Figure 191. Removing the internal speaker

7. Align the new internal speaker with the four metal clips 1 on the inner side of the front panel, and then slide the internal speaker to the left side of the chassis until it snaps into position.

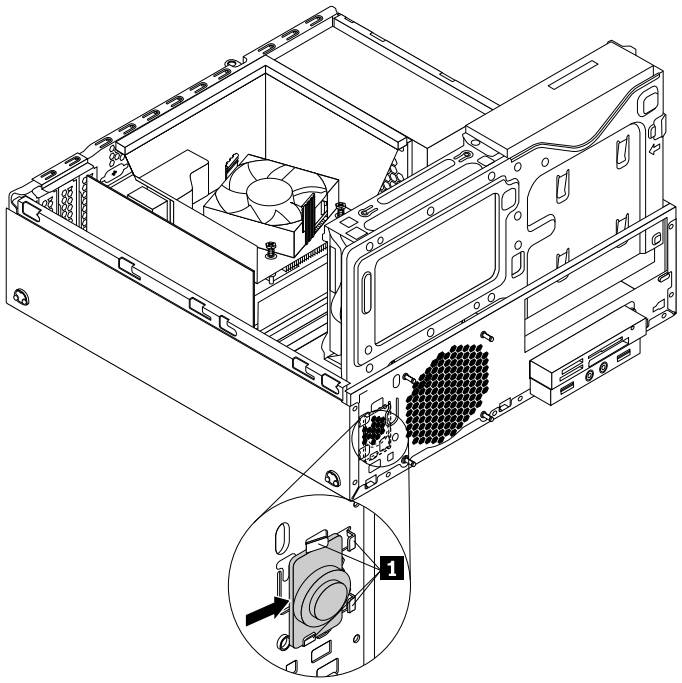

Figure 192. Installing the internal speaker

8. Connect the cable of the new internal speaker to the internal speaker connector on the system board. See “Locating parts on the system board” on page 82.

What to do next:

- To work with another piece of hardware, go to the appropriate section.
- To complete the installation or replacement, go to “Completing the parts replacement” on page 234.

Replacing the thermal sensor

Attention: Do not open your computer or attempt any repair before reading and understanding the Chapter 1 “Safety information” on page 1.

This section provides instructions on how to replace the thermal sensor.

To replace the thermal sensor, do the following:

1. Remove all media from the drives and turn off all attached devices and the computer. Then, disconnect all power cords from electrical outlets and disconnect all cables that are connected to the computer.
2. Remove the computer cover. See “Removing the computer cover” on page 159.
3. Remove the front bezel. See “Removing and reinstalling the front bezel” on page 160
4. Locate the thermal sensor. See “Locating major FRUs and CRUs” on page 80.
5. Press the retaining clip 1 in the direction as shown and pivot the drive bay assembly upward at the same time.

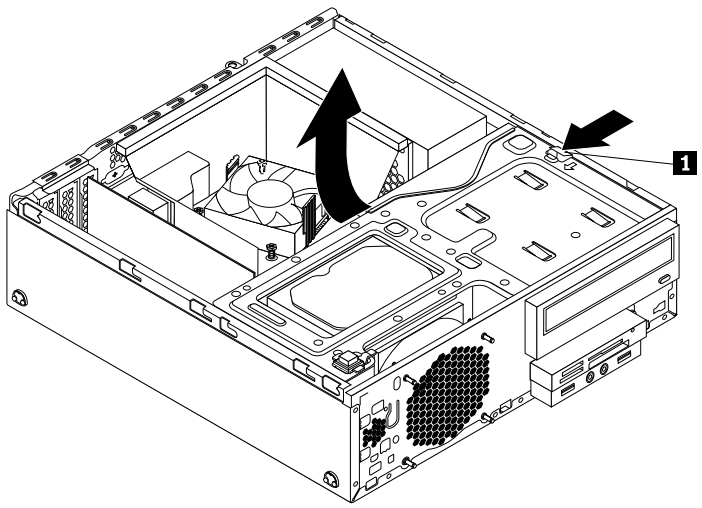

Figure 193. Pivoting the drive bay assembly upward

6. Disconnect the thermal sensor cable from the thermal sensor connector on the system board.

7. On the inner side of the front panel, press the left retaining clip **1** that secures the plastic holder of the thermal sensor as shown and then push the clip out of the outer side of the front panel. Then, disengage the plastic holder holding the thermal sensor from the chassis.

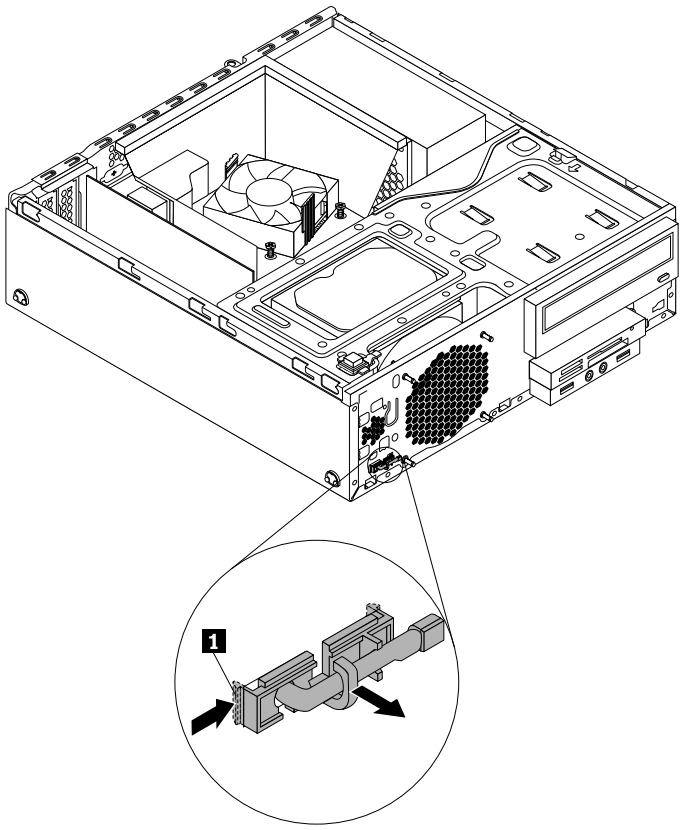

Figure 194. Removing the thermal sensor

8. Pull the entire thermal sensor out of the chassis.

9. Insert the connector and cable of the new thermal sensor into the hole 1 in the chassis. Then, align the two tabs on the plastic holder holding the thermal sensor with the two holes 1 and 2 in the chassis, and push the plastic holder until it snaps into position.

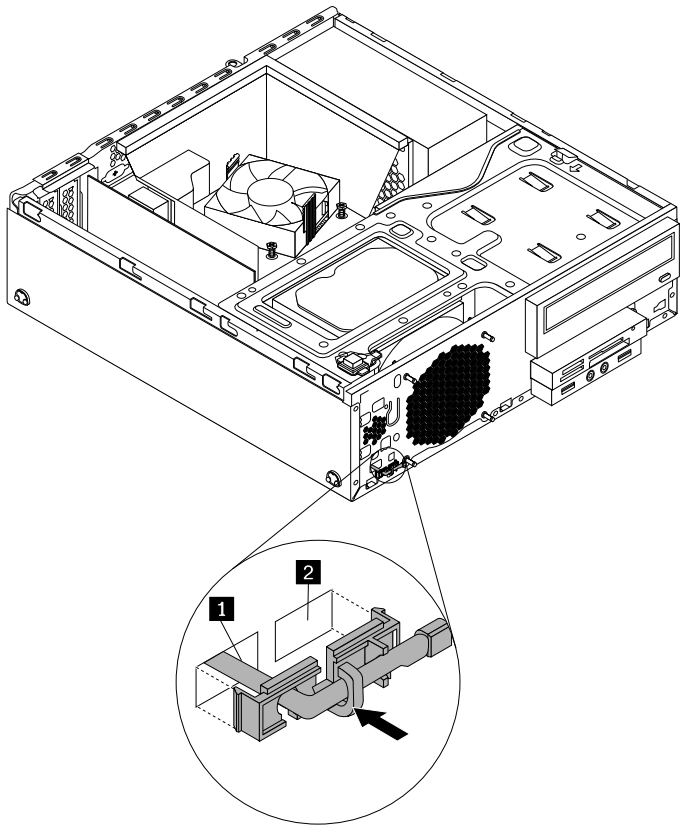

Figure 195. Installing the thermal sensor

10. Connect the cable of the new thermal sensor to the thermal sensor connector on the system board. See "Locating parts on the system board" on page 82.

What to do next:

- To work with another piece of hardware, go to the appropriate section.
- To complete the installation or replacement, go to "Completing the parts replacement" on page 234.

Replacing the Wi-Fi units

Attention: Do not open your computer or attempt any repair before reading and understanding the Chapter 1 "Safety information" on page 1.

This section provides instructions on how to replace the Wi-Fi units. The Wi-Fi units include a Wi-Fi adapter card, a Wi-Fi card module and a rear Wi-Fi antenna cable.

Replacing the Wi-Fi units includes the following operations:

- "Removing the Wi-Fi adapter card" on page 222
- "Removing the Wi-Fi card module" on page 223
- "Installing the Wi-Fi units" on page 224

Removing the Wi-Fi adapter card

To remove the Wi-Fi adapter card, do the following:

1. Remove all media from the drives and turn off all attached devices and the computer. Then, disconnect all power cords from electrical outlets and disconnect all cables that are connected to the computer.
2. Remove the computer cover. See “Removing the computer cover” on page 159.
3. If your computer comes with a Wi-Fi card module that supports the Bluetooth function, disconnect the Bluetooth cable from the Wi-Fi adapter card.

   Note: The Bluetooth cable connects the Bluetooth connector on the Wi-Fi adapter card to the front USB connector on the system board.

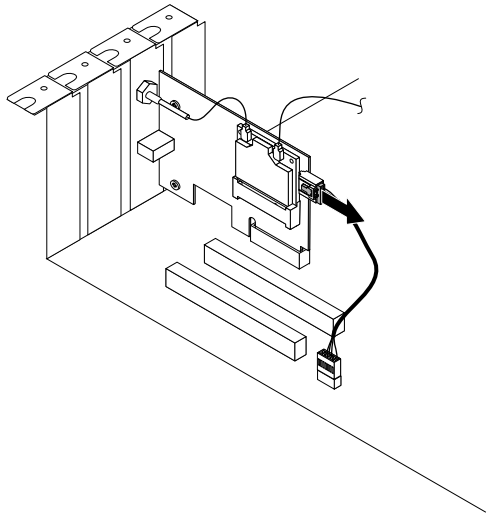

Figure 196. Disconnecting the Bluetooth cable

4. Hold the Wi-Fi adapter card and disconnect the front and rear Wi-Fi antenna cables from the Wi-Fi card module.

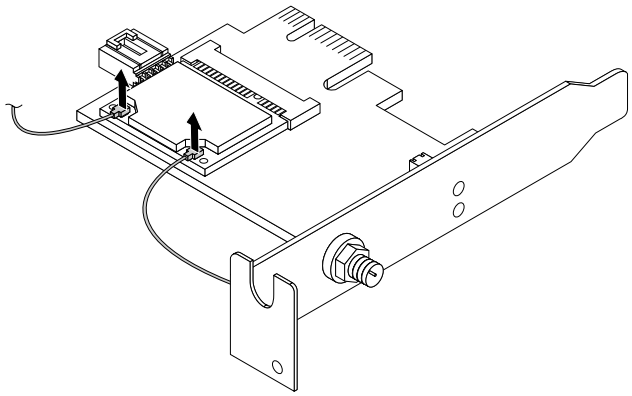

Figure 197. Removing the Wi-Fi antenna cables

5. Rotate the PCI card retainer to the open position. Grasp the Wi-Fi adapter card that is currently installed and gently pull it out of the slot.

   Note: The card fits tightly into the card slot. If necessary, alternate moving each side of the card a small amount until it is removed from the card slot.

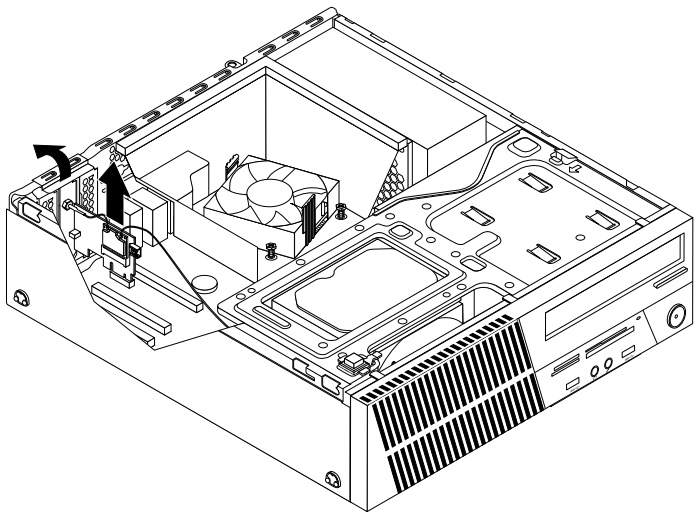

Figure 198. Removing the Wi-Fi adapter card

What to do next:

- To work with another piece of hardware, go to the appropriate section.
- To complete the installation or replacement, go to "Completing the parts replacement" on page 234.

Removing the Wi-Fi card module

To remove the Wi-Fi card module, do the following:

1. Remove the Wi-Fi adapter card. See "Removing the Wi-Fi adapter card" on page 222.

2. Remove the two screws that secure the Wi-Fi card module.

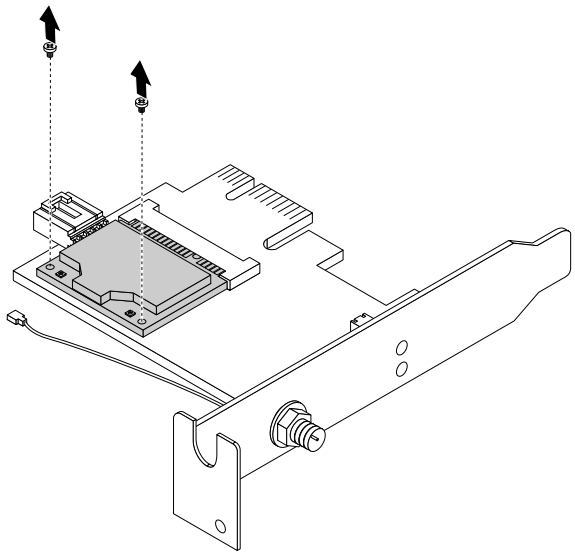

Figure 199. Removing the screws that secure the Wi-Fi card module

3. Pull the Wi-Fi card module out of the mini PCI Express slot.

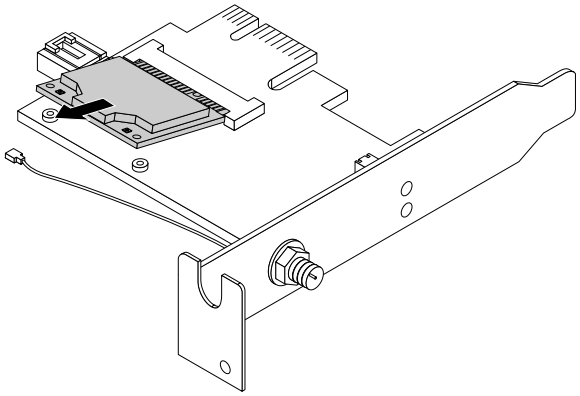

Figure 200. Removing the Wi-Fi card module

What to do next:

- To work with another piece of hardware, go to the appropriate section.
- To complete the installation or replacement, go to “Completing the parts replacement” on page 234.

Installing the Wi-Fi units

To install the Wi-Fi units, do the following:

1. Carefully insert the Wi-Fi card module into the mini PCI Express slot at an angle of about 20 degrees. Ensure that the Wi-Fi card module is firmly inserted and then pivot the module downward.

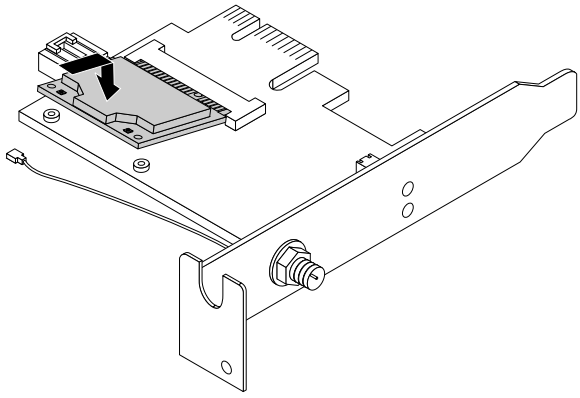

Figure 201. Installing the Wi-Fi card module

2. Install the two screws to secure the Wi-Fi card module to the Wi-Fi adapter card.

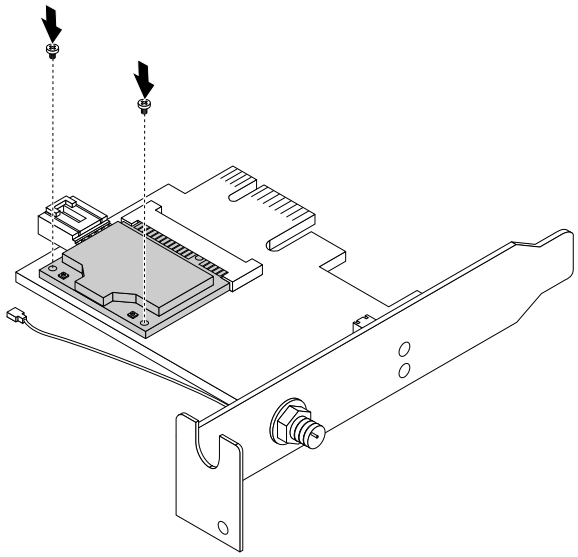

Figure 202. Installing the screws to secure the Wi-Fi card module

3. Connect the front Wi-Fi antenna cable and rear Wi-Fi antenna cable to the Wi-Fi card module.

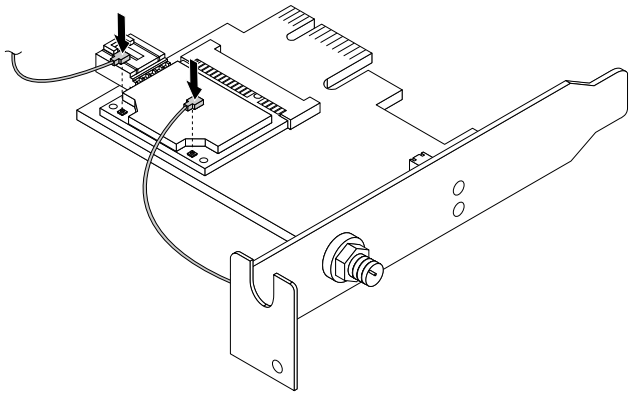

Figure 203. Connecting the Wi-Fi antenna cables

4. Install the Wi-Fi adapter card into the PCI Express x1 slot on the system board. Then, rotate the PCI card retainer to the closed position. See “Locating parts on the system board” on page 82.

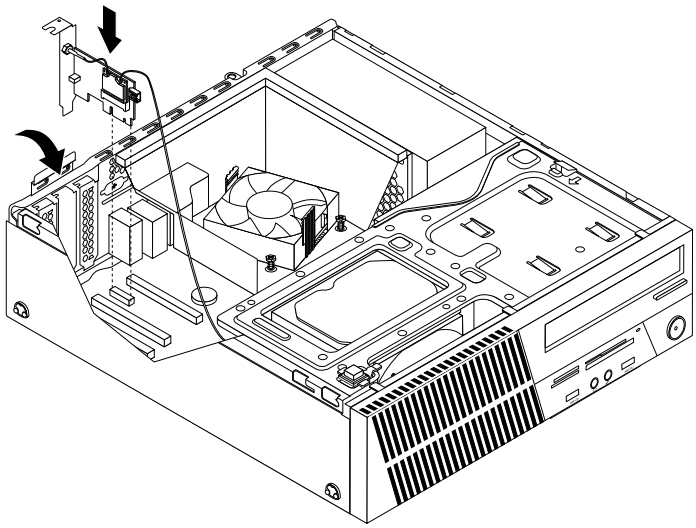

Figure 204. Installing the Wi-Fi adapter card

5. If the installed Wi-Fi card module supports the Bluetooth function, use a Bluetooth cable to connect the Bluetooth connector on the Wi-Fi adapter card to the front USB connector 1 on the system board. See “Locating parts on the system board” on page 82.

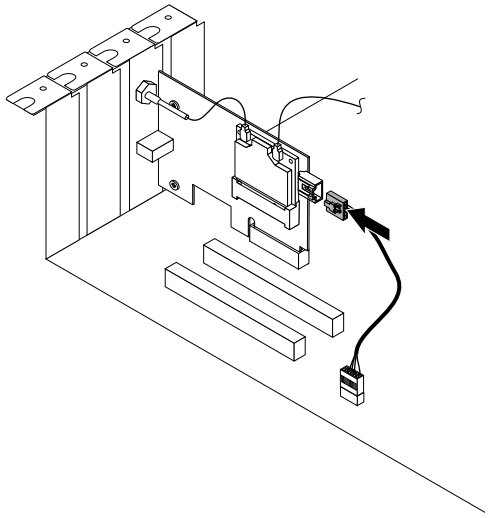

Figure 205. Connecting the Bluetooth cable

What to do next:

- To work with another piece of hardware, go to the appropriate section.
- To complete the installation or replacement, go to "Completing the parts replacement" on page 234.

Installing or removing the rear Wi-Fi antenna

This section provides instructions on how to install or remove the rear Wi-Fi antenna.

Installing the rear Wi-Fi antenna

Attention: Do not open your computer or attempt any repair before reading and understanding the Chapter 1 "Safety information" on page 1.

To install the rear Wi-Fi antenna, do the following:

1. Remove all media from the drives and turn off all attached devices and the computer. Then, disconnect all power cords from electrical outlets and disconnect all cables that are connected to the computer.
2. Remove the computer cover. See "Removing the computer cover" on page 159.

3. Align the rear Wi-Fi antenna cable connector **1** with the hole in the Wi-Fi antenna adapter as shown. Then, insert the rear Wi-Fi antenna cable connector into the hole.

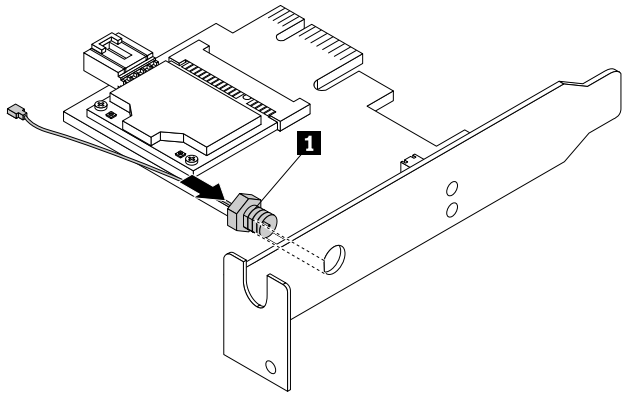

Figure 206. Installing the rear Wi-Fi antenna cable connector

4. Install the rear Wi-Fi antenna washer **2** and rear Wi-Fi antenna nut **3** to secure the rear Wi-Fi antenna cable connector **1** on the Wi-Fi adapter card.

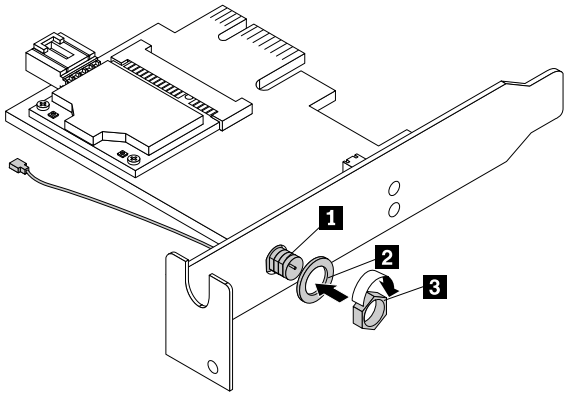

Figure 207. Installing the nut and washer to secure the rear Wi-Fi antenna cable connector

5. Install the rear Wi-Fi antenna to the rear Wi-Fi antenna cable connector. Then, adjust the angle of the rear Wi-Fi antenna to prevent accidental breakage of the antenna.

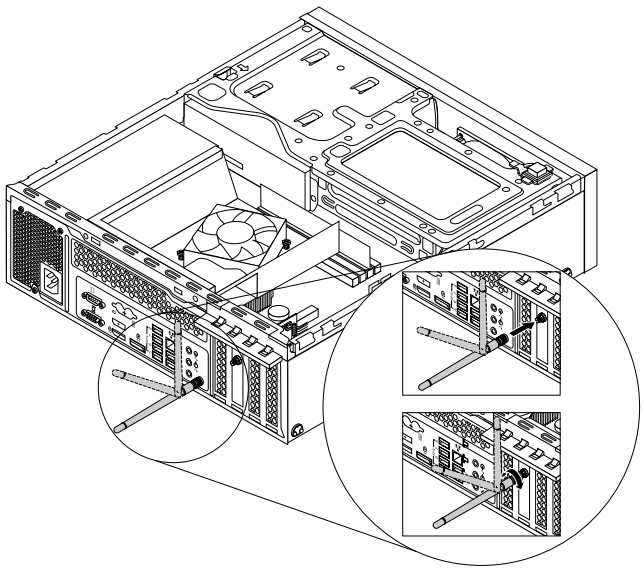

Figure 208. Installing the rear Wi-Fi antenna

6. Connect the rear Wi-Fi antenna cable to the Wi-Fi card module. See “Replacing the Wi-Fi units” on page 221.

What to do next:

- To work with another piece of hardware, go to the appropriate section.
- To complete the installation or replacement, go to “Completing the parts replacement” on page 234.

Removing the rear Wi-Fi antenna

Attention: Do not open your computer or attempt any repair before reading and understanding the Chapter 1 “Safety information” on page 1.

To remove the rear Wi-Fi antenna, do the following:

1. Remove all media from the drives and turn off all attached devices and the computer. Then, disconnect all power cords from electrical outlets and disconnect all cables that are connected to the computer.
2. Remove the computer cover. See “Removing the computer cover” on page 159.
3. Straighten the rear Wi-Fi antenna so that it can be more easily twisted.

4. Hold the thicker end of the rear Wi-Fi antenna and unscrew the Wi-Fi antenna from the rear of the computer.

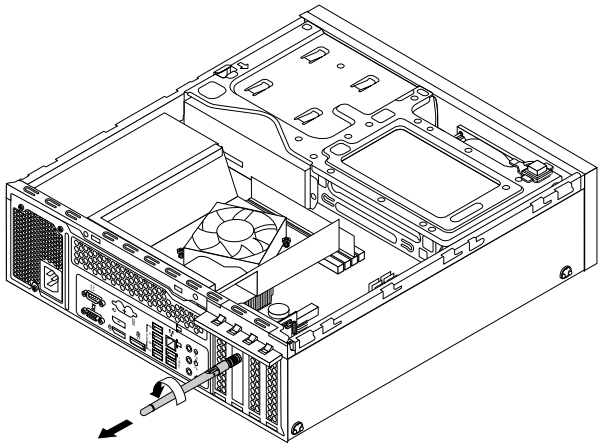

Figure 209. Removing the rear Wi-Fi antenna

5. Remove the Wi-Fi adapter card. See “Removing the Wi-Fi card module” on page 223.
6. Remove the rear Wi-Fi antenna nut **3** and rear Wi-Fi antenna washer **2** from the rear Wi-Fi antenna cable connector **1**. Then, remove the rear Wi-Fi antenna cable connector from the Wi-Fi adapter.

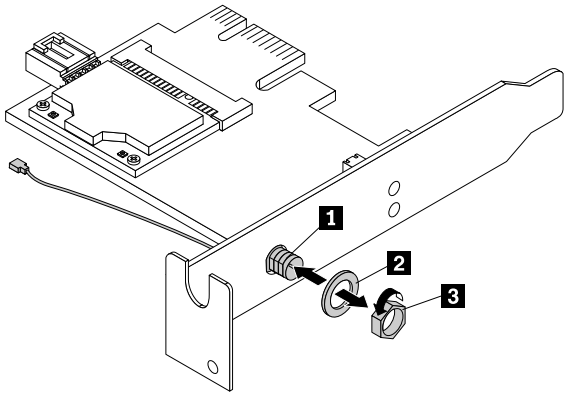

Figure 210. Removing the rear Wi-Fi antenna cable connector

What to do next:

- To work with another piece of hardware, go to the appropriate section.
- To complete the installation or replacement, go to “Completing the parts replacement” on page 234.

Installing or removing the front Wi-Fi antenna

This section provides instructions on how to install or remove the front Wi-Fi antenna.

Installing the front Wi-Fi antenna

Attention: Do not open your computer or attempt any repair before reading and understanding the Chapter 1 “Safety information” on page 1.

To install the front Wi-Fi antenna, do the following:

1. Remove all media from the drives and turn off all attached devices and the computer. Then, disconnect all power cords from electrical outlets and disconnect all cables that are connected to the computer.
2. Remove the computer cover. See “Removing the computer cover” on page 159.
3. Remove the front bezel. See “Removing and reinstalling the front bezel” on page 160
4. Press the retaining clip **1** in the direction as shown and pivot the drive bay assembly upward at the same time.

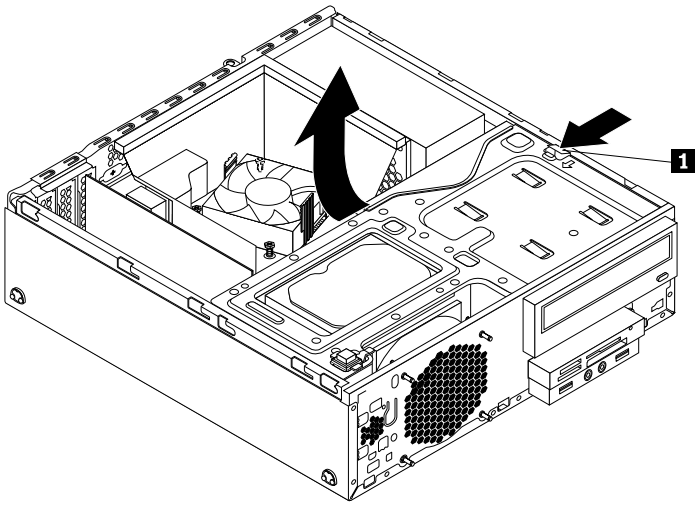

Figure 211. Pivoting the drive bay assembly upward

5. Peel off the paper that protects the sticker on the front Wi-Fi antenna.

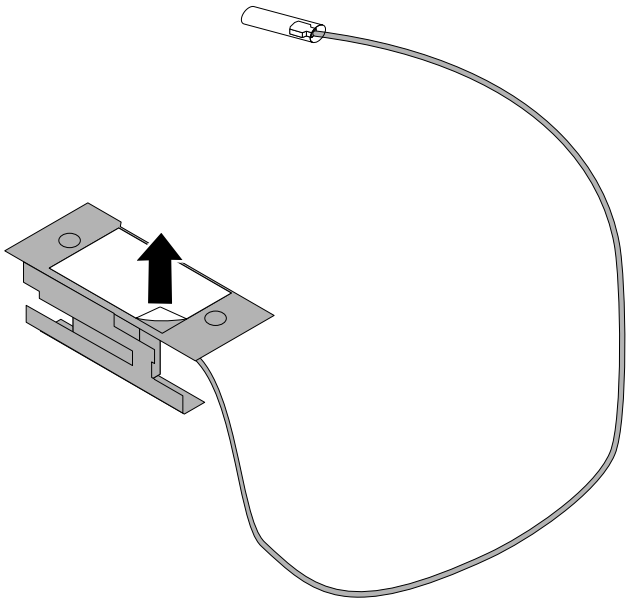

Figure 212. Peeling off the paper that protects the sticker

6. Stick the front Wi-Fi antenna to the front panel and then insert its cable through the corresponding hole in the front panel as shown.

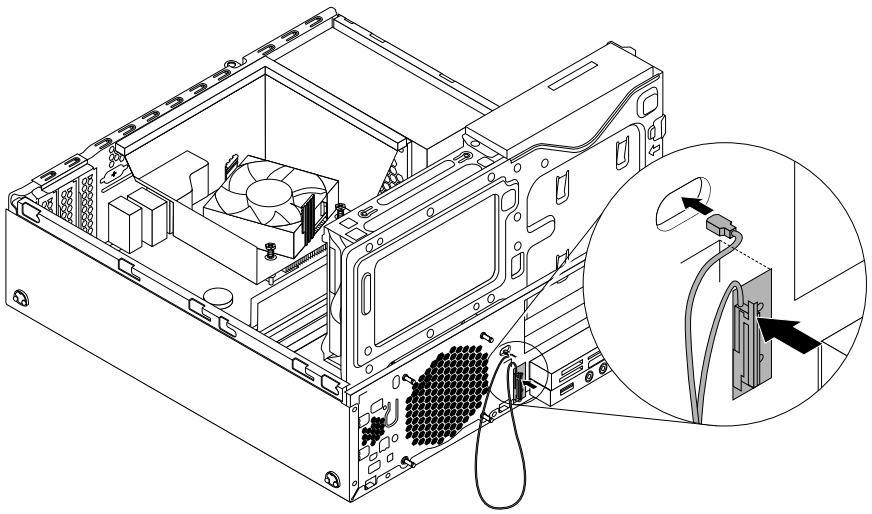

Figure 213. Installing the front Wi-Fi antenna

7. Connect the front Wi-Fi antenna cable to the Wi-Fi card module. See “Replacing the Wi-Fi units” on page 221.

What to do next:

- To work with another piece of hardware, go to the appropriate section.
- To complete the installation or replacement, go to “Completing the parts replacement” on page 234.

Removing the rear Wi-Fi antenna

Attention: Do not open your computer or attempt any repair before reading and understanding the Chapter 1 “Safety information” on page 1.

To remove the rear Wi-Fi antenna, do the following:

1. Remove all media from the drives and turn off all attached devices and the computer. Then, disconnect all power cords from electrical outlets and disconnect all cables that are connected to the computer.
2. Remove the computer cover. See “Removing the computer cover” on page 159.
3. Straighten the rear Wi-Fi antenna so that it can be more easily twisted.

4. Hold the thicker end of the rear Wi-Fi antenna and unscrew the Wi-Fi antenna from the rear of the computer.

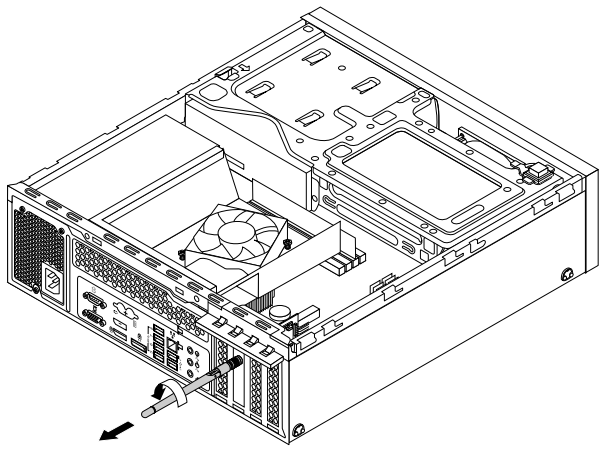

Figure 214. Removing the rear Wi-Fi antenna

5. Remove the Wi-Fi adapter card. See “Removing the Wi-Fi card module” on page 223.
6. Remove the rear Wi-Fi antenna nut 3 and rear Wi-Fi antenna washer 2 from the rear Wi-Fi antenna cable connector 1. Then, remove the rear Wi-Fi antenna cable connector from the Wi-Fi adapter.

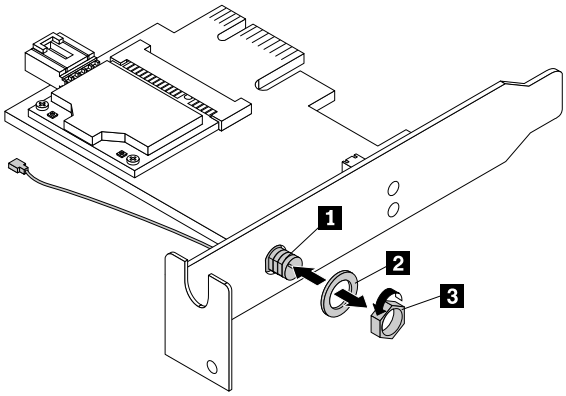

Figure 215. Removing the rear Wi-Fi antenna cable connector

What to do next:

- To work with another piece of hardware, go to the appropriate section.
- To complete the installation or replacement, go to “Completing the parts replacement” on page 234.

Replacing the keyboard or mouse

Attention: Do not open your computer or attempt any repair before reading and understanding the Chapter 1 “Safety information” on page 1.

This section provides instructions on how to replace the keyboard or mouse.

To replace the keyboard or mouse, do the following:

1. Disconnect the old keyboard cable or mouse cable from the computer.
2. Connect a new keyboard or mouse to one of the USB connectors on the computer. Depending on where you want to connect the new keyboard or mouse, see “Locating connectors, controls, and indicators on the front of your computer” on page 77 or “Locating connectors on the rear of your computer” on page 77.

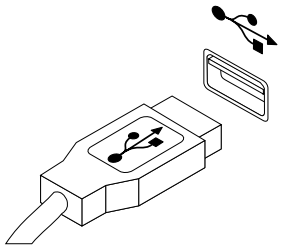

Figure 216. Connecting the USB keyboard or mouse

Completing the parts replacement

After completing the installation or replacement for all parts, you need to reinstall the computer cover and reconnect cables. Depending on the parts you installed or replaced, you might need to confirm the updated information in the Setup Utility program. Refer to Chapter 5 “Using the Setup Utility program” on page 55.

To reinstall the computer cover and reconnect cables to your computer, do the following:

1. Ensure that all components have been reassembled correctly and that no tools or loose screws are left inside your computer. See “Locating major FRUs and CRUs” on page 80 for the locations of various components in your computer.
2. Ensure that the cables are routed correctly before reinstalling the computer cover. Keep cables clear of the hinges and sides of the computer chassis to avoid interference with reinstalling the computer cover.

3. Press the release tab **1** on the right side of the drive bay assembly and pivot the drive bay assembly downward until it snaps into position.

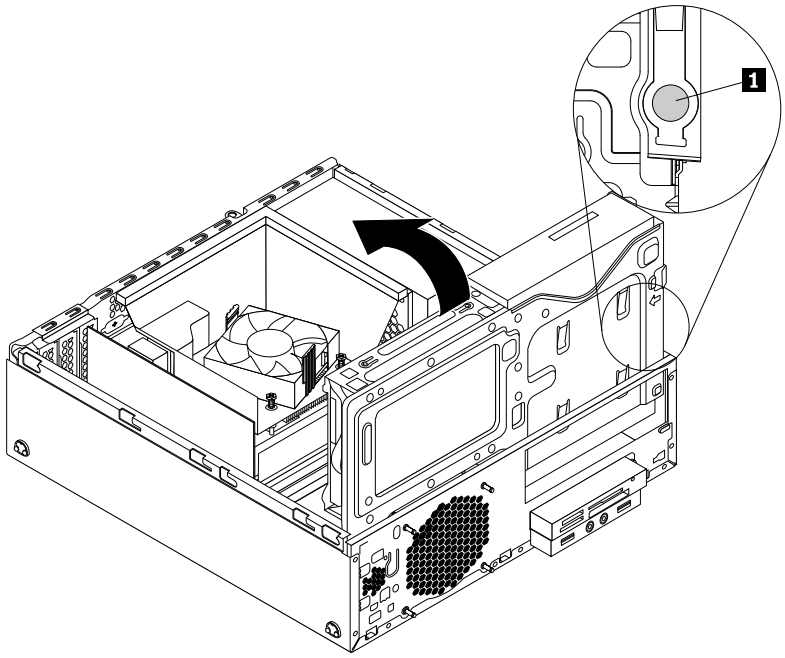

Figure 217. Pivoting the drive bay assembly downward

4. Reinstall the front bezel.
5. Position the computer cover on the chassis so that the rail guides on the bottom of the computer cover engage the rails on the chassis. Then, push the computer cover to the front of the computer until it snaps into position. Install the screws to secure the computer cover.

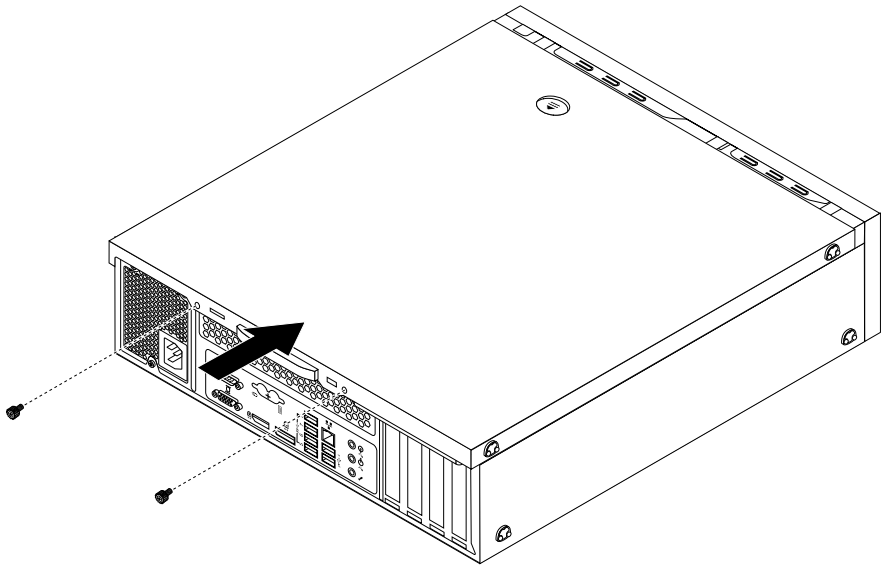

Figure 218. Installing the computer cover

6. Reconnect the external cables and power cords. See “Locating connectors on the rear of your computer” on page 77.
7. To update the configuration of your computer, refer to Chapter 5 “Using the Setup Utility program” on page 55.

Note: In most areas of the world, Lenovo requires the return of the defective Customer Replaceable Unit (CRU). Information about this will come with the CRU or will come a few days after the CRU arrives.

Obtaining device drivers

You can obtain device drivers for operating systems that are not preinstalled at http://www.lenovo.com/support. Installation instructions are provided in readme files with the device-driver files.

Chapter 10. Replacing FRUs (machine types: 10A4, 10A5, 10AA, 10AB, 10DF, 10DG, 10DH, 10DJ, 10E8, 10E9, 10EA, and 10EB)

This chapter provides information about the FRU replacement instructions.

Important: Be sure to read and understand Chapter 1 “Safety information” on page 1 before replacing any FRU. These precautions and guidelines will help you work safely.

Note: FRU replacements are to be done only by trained service technicians.

Removing the computer cover

Attention: Do not open your computer or attempt any repair before reading and understanding the Chapter 1 “Safety information” on page 1.

This section provides instructions on how to remove the computer cover.

CAUTION:



Before you open the computer cover, turn off the computer and wait several minutes until the computer is cool.

To remove the computer cover, do the following:

1. Remove any media from the drives and turn off all attached devices and the computer.
2. Disconnect all power cords from electrical outlets.
3. Disconnect the power cord, Input/Output cables, and any other cables that are connected to the computer.
4. Remove the screw that secures the computer cover.

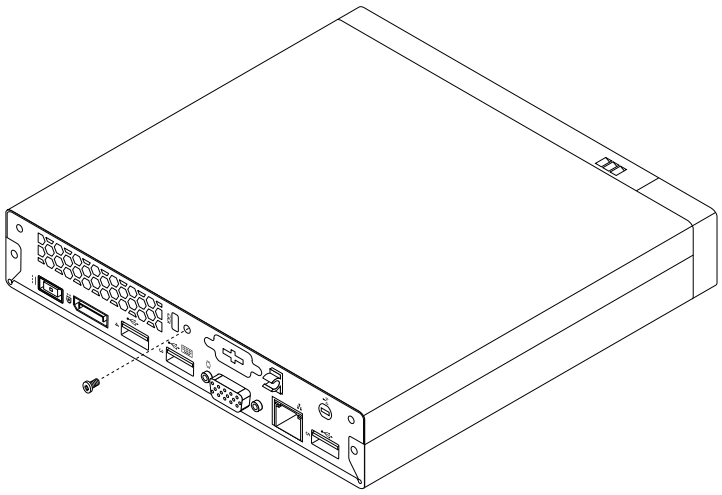

Figure 219. Removing the screw that secures the computer cover

© Copyright Lenovo 2013, 2015

5. Slide the computer cover toward the front of the computer a small amount. Then, lift the computer cover to remove it from the computer.

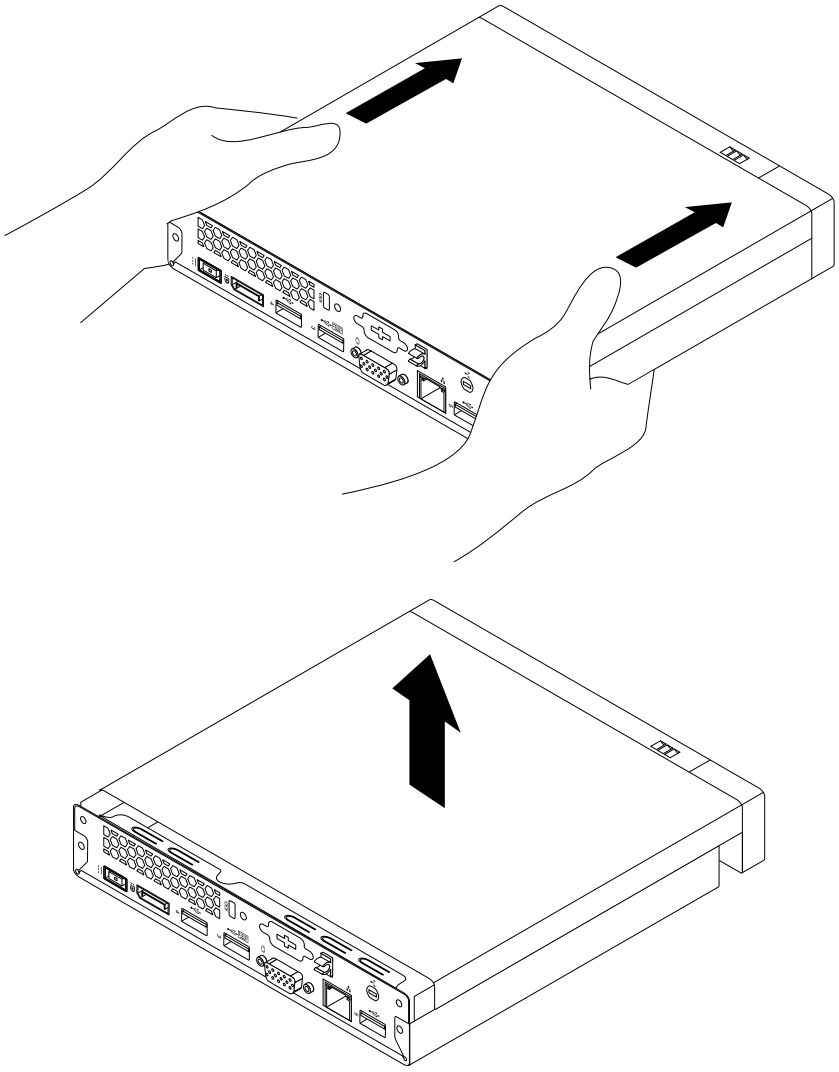

Figure 220. Removing the computer cover

Installing external options

You can connect external options to your computer, such as external speakers, a printer, or a scanner. For some external options, you must install additional software in addition to making the physical connection. When installing an external option, see “Locating connectors on the rear of your computer” on page 87 and “Locating connectors on the rear of your computer” on page 87 to identify the required connector. Then, use the instructions that come with the option to help you make the connection and install any software or device drivers that are required for the option.

Installing or removing the ac power adapter

Attention: Do not open your computer or attempt any repair before reading and understanding the Chapter 1 “Safety information” on page 1.

This section provides instructions on how to install or remove the ac power adapter.

To install the ac power adapter, connect the ac power adapter to the ac power adapter connector at the rear of your computer and a workable electrical outlet. Secure the power cord into the power adapter cable loop at the rear of the computer as shown.

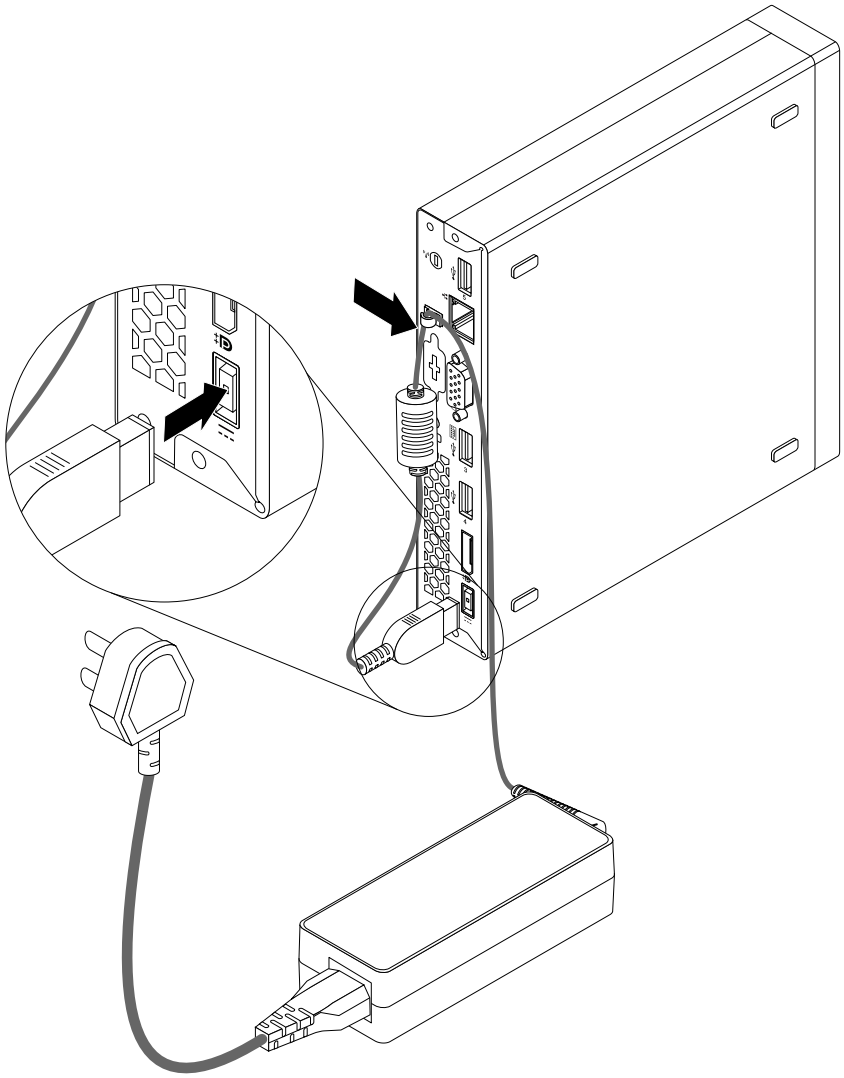

Figure 221. Connecting the ac power adapter

To remove the ac power adapter, do the following:

1. Remove all media from the drives and turn off all attached devices and the computer. Then, disconnect all power cords from electrical outlets and disconnect all cables that are connected to the computer.

2. Remove the power cord from the ac power adapter cable loop at the rear of the computer and then disconnect the ac power adapter cable from the computer.

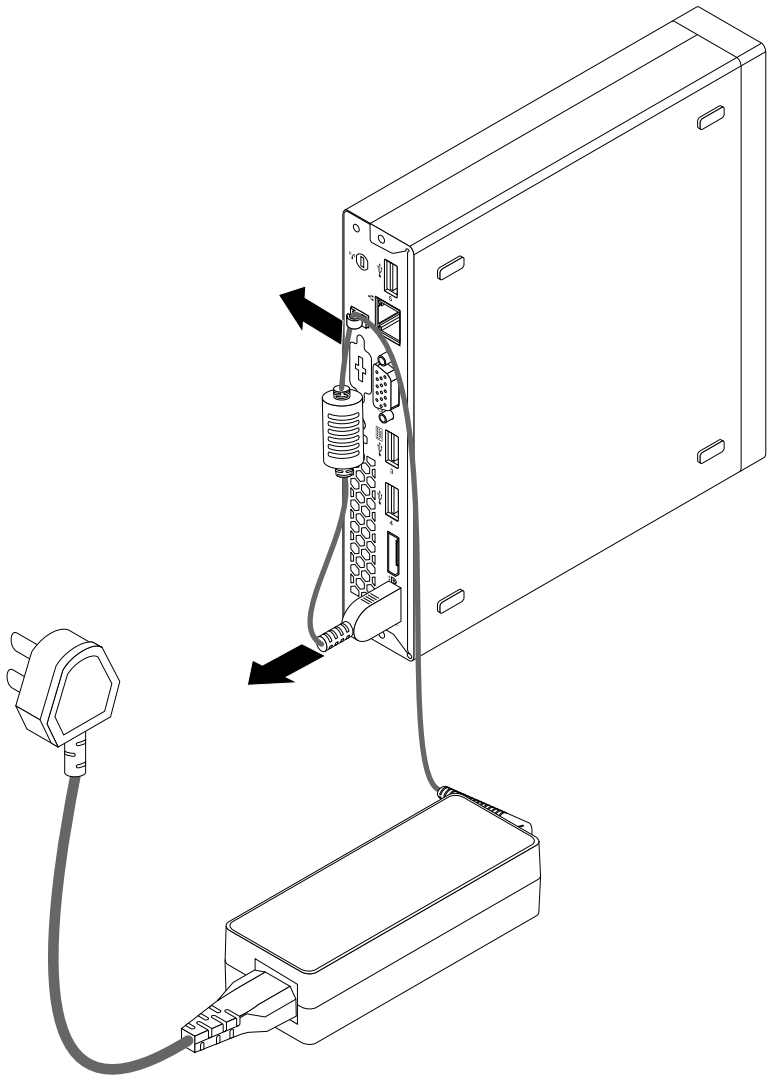

Figure 222. Disconnecting the ac power adapter

What to do next:

- To work with another piece of hardware, go to the appropriate section.
- To complete the installation or replacement, go to “Completing the parts replacement” on page 286.

Installing or removing the vertical stand

Attention: Do not open your computer or attempt any repair before reading and understanding the Chapter 1 “Safety information” on page 1.

This section provides instructions on how to install or remove the vertical stand.

Note: The vertical stand and Video Electronics Standards Association (VESA®) mount bracket are optional parts. If your computer comes with the VESA mount bracket installed, ensure that you remove the VESA

mount bracket before you install the vertical stand. To remove the VESA mount bracket, see “Installing or removing the VESA mount bracket” on page 242.

To install the vertical stand, do the following:

1. Turn off the computer.
2. Align the rear of the computer with the rear of the vertical stand and position the computer on the vertical stand as shown.

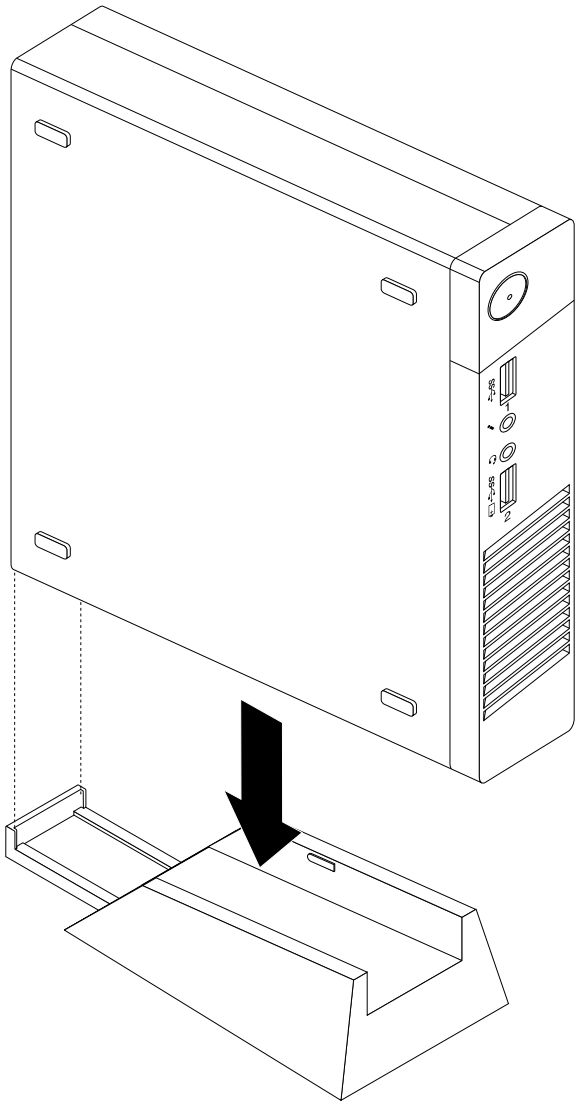

Figure 223. Installing the vertical stand

To remove the vertical stand, do the following:

1. Turn off the computer.

2. Lift the computer to remove it from the vertical stand.

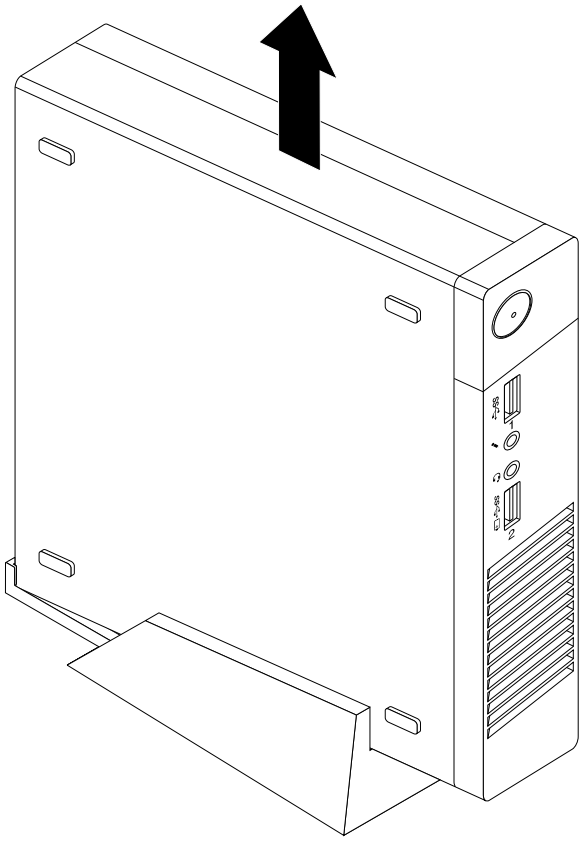

Figure 224. Removing the computer from the vertical stand

Installing or removing the VESA mount bracket

Attention: Do not open your computer or attempt any repair before reading and understanding the Chapter 1 “Safety information” on page 1.

This section provides instructions on how to install or remove the VESA mount bracket.

Note: The VESA mount bracket is only available on some models.

To install the VESA mount bracket, do the following:

1. Remove all media from the drives and turn off all attached devices and the computer. Then, disconnect all power cords from electrical outlets and disconnect all cables that are connected to the computer.

2. Slide the computer into the VESA mount bracket.

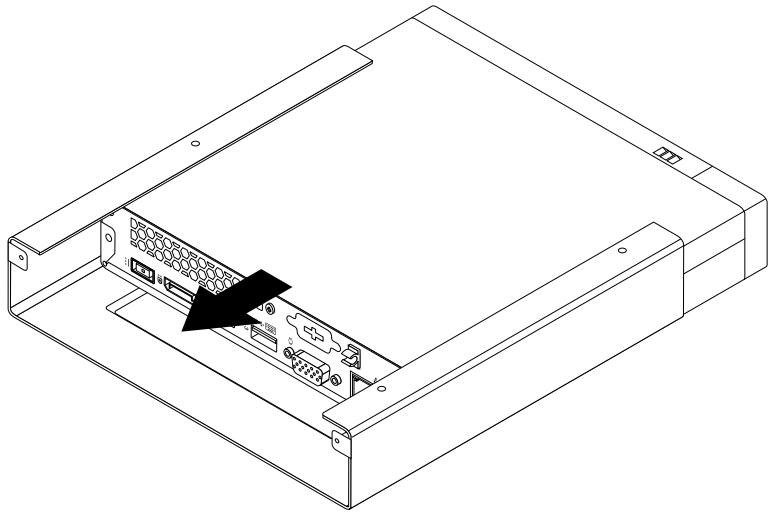

Figure 225. Installing the VESA mount bracket

3. Install the two screws to secure the VESA mount bracket to the computer.

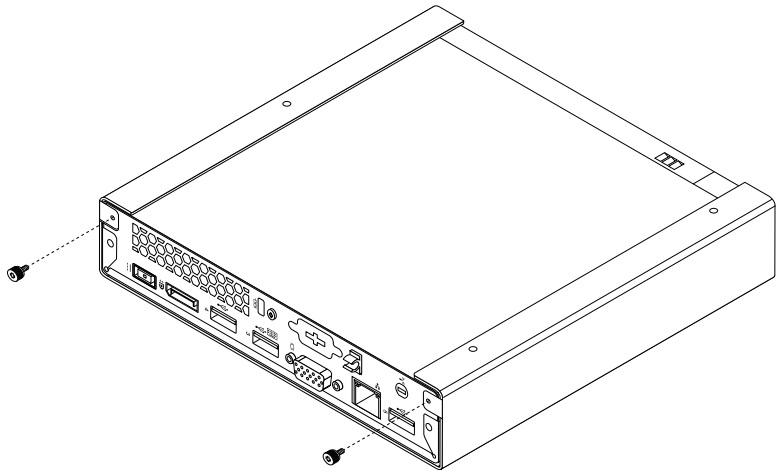

Figure 226. Installing the screws to secure the VESA mount bracket

To remove the VESA mount bracket, do the following:

1. Remove all media from the drives and turn off all attached devices and the computer. Then, disconnect all power cords from electrical outlets and disconnect all cables that are connected to the computer.

2. Remove the two screws that secure the VESA mount bracket to the computer.

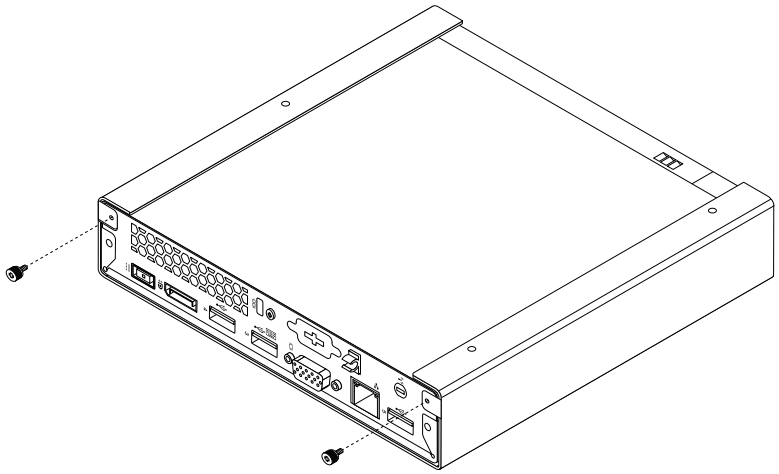

Figure 227. Removing the screws that secure the VESA mount bracket

3. Slide the computer toward the front of the VESA mount bracket to remove the VESA mount bracket from the computer.

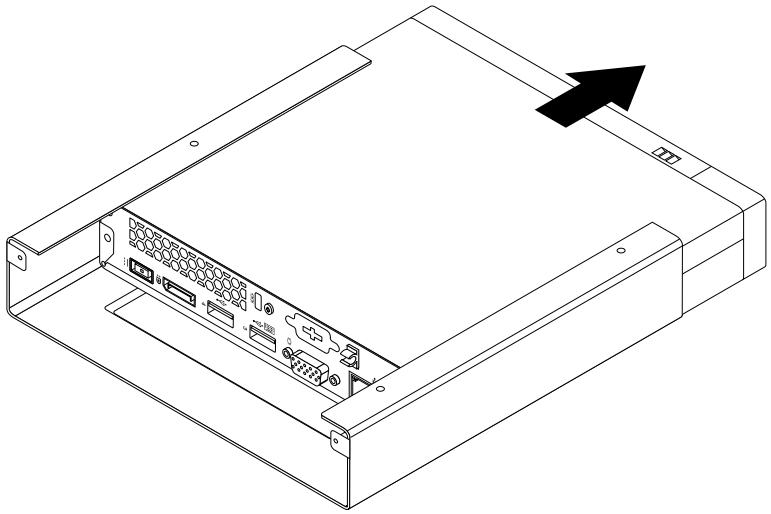

Figure 228. Removing the VESA mount bracket

Installing or removing the ac power adapter bracket

Attention: Do not open your computer or attempt any repair before reading and understanding the Chapter 1 “Safety information” on page 1.

This section provides instructions on how to install or remove the ac power adapter bracket.

Note: The ac power adapter bracket is only available on some models.

To remove the ac power adapter bracket, do the following:

1. Remove all media from the drives and turn off all attached devices and the computer. Then, disconnect all power cords from electrical outlets and disconnect all cables that are connected to the computer.
2. Pull the tab **1** and then slide the ac power adapter bracket as shown to remove it from the VESA mount bracket.

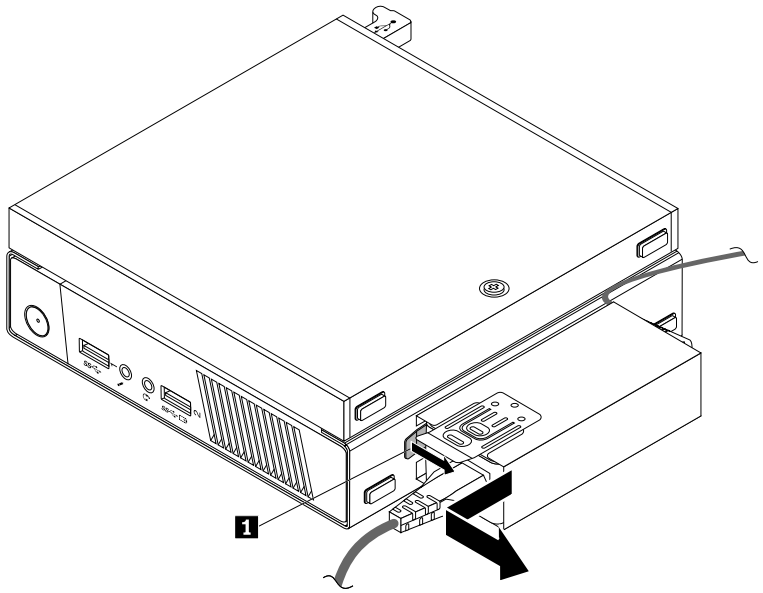

Figure 229. Removing the ac power adapter bracket

To install the ac power adapter bracket to the VESA mount bracket, align the two tabs on the ac power adapter bracket with the slots in the VESA mount bracket, and then slide the ac power adapter bracket as shown to install it on the VESA mount bracket.

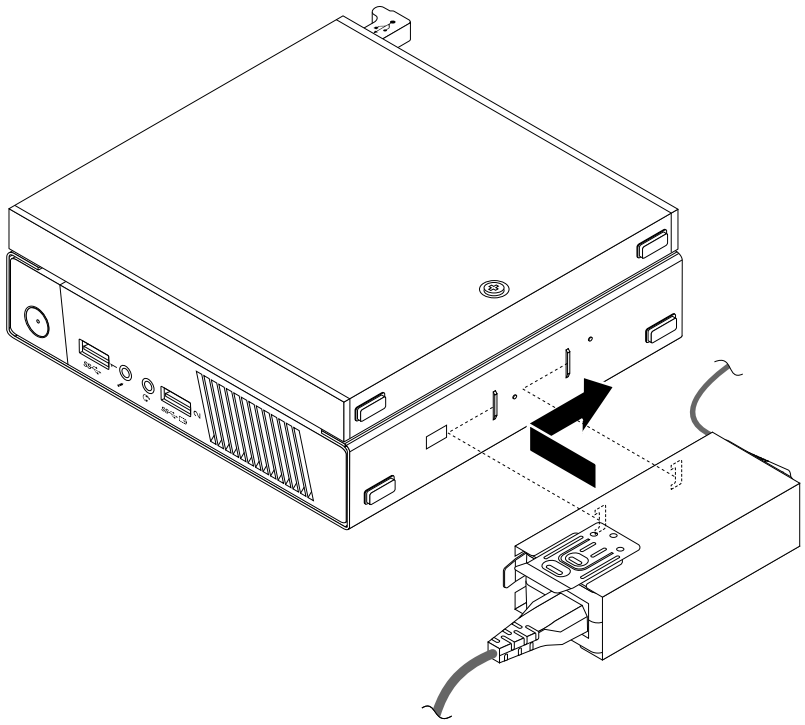

Figure 230. Installing the ac power adapter bracket

Replacing the optical drive

Attention: Do not open your computer or attempt any repair before reading and understanding the Chapter 1 “Safety information” on page 1.

This section provides instructions on how to replace the optical drive.

Note: The optical drive is only available on some models.

To replace the optical drive, do the following:

1. Remove all media from the drives and turn off all attached devices and the computer. Then, disconnect all power cords from electrical outlets and disconnect all cables that are connected to the computer.
2. Disconnect the optical drive cable from the USB connector on the computer.

3. Remove the screw that secures the optical drive box on the VESA mount bracket and then slide the optical drive box as shown to remove it from the VESA mount bracket.

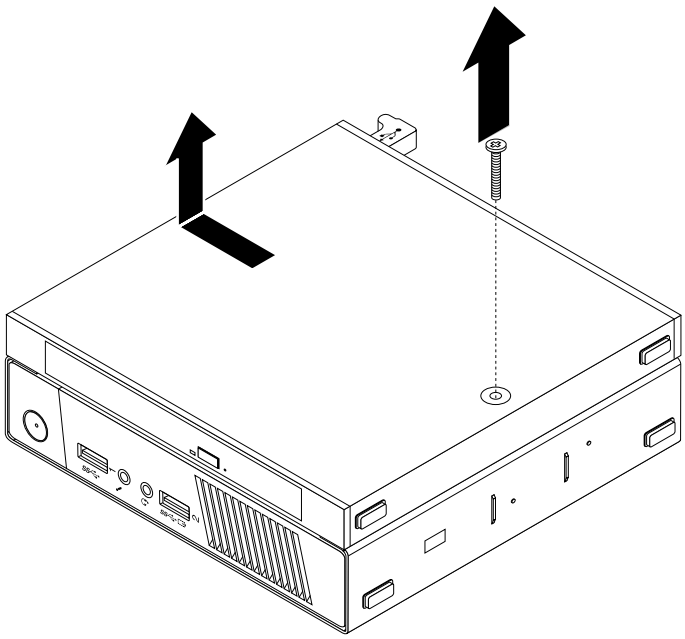

Figure 231. Removing the optical drive box

4. Remove the screw that secures the optical drive in the optical drive box. Use a screwdriver to slide the optical drive forward and then remove the optical drive from the optical drive box.

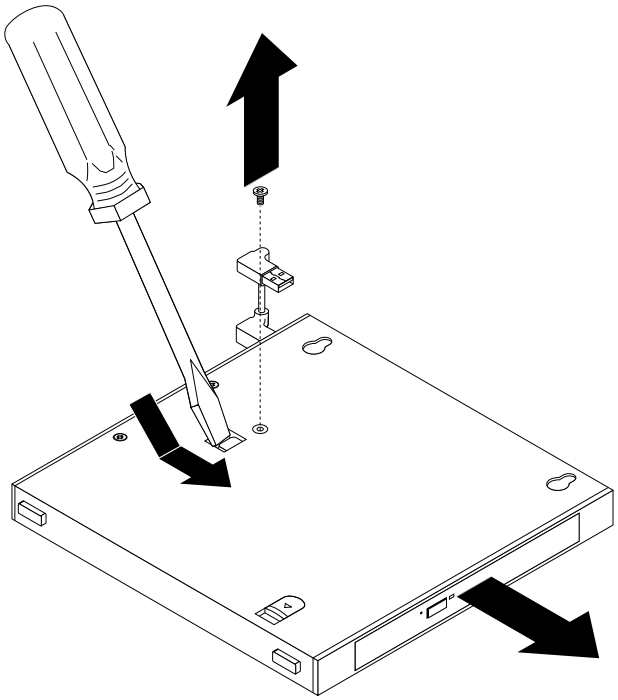

Figure 232. Removing the optical drive from the optical drive box

5. Remove the two screws that secure the optical drive metal plate and then remove the metal plate from the optical drive.

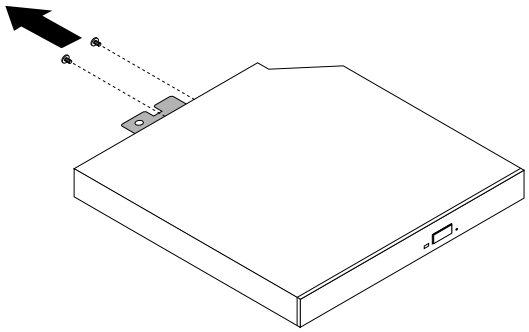

Figure 233. Removing the optical drive metal plate

6. Align the two screw holes in the optical drive metal plate with the corresponding holes in the new optical drive and then install the two screws to secure the metal plate on the new optical drive.

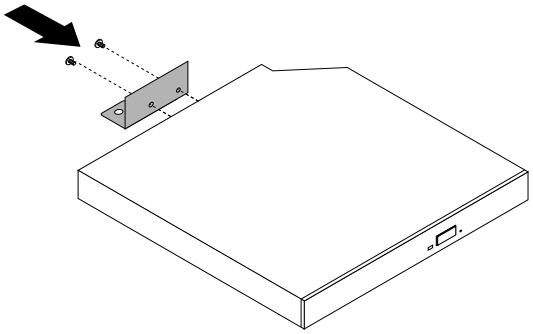

Figure 234. Installing the optical drive metal plate

7. Slide the new optical drive into the optical drive box until it snaps into position.

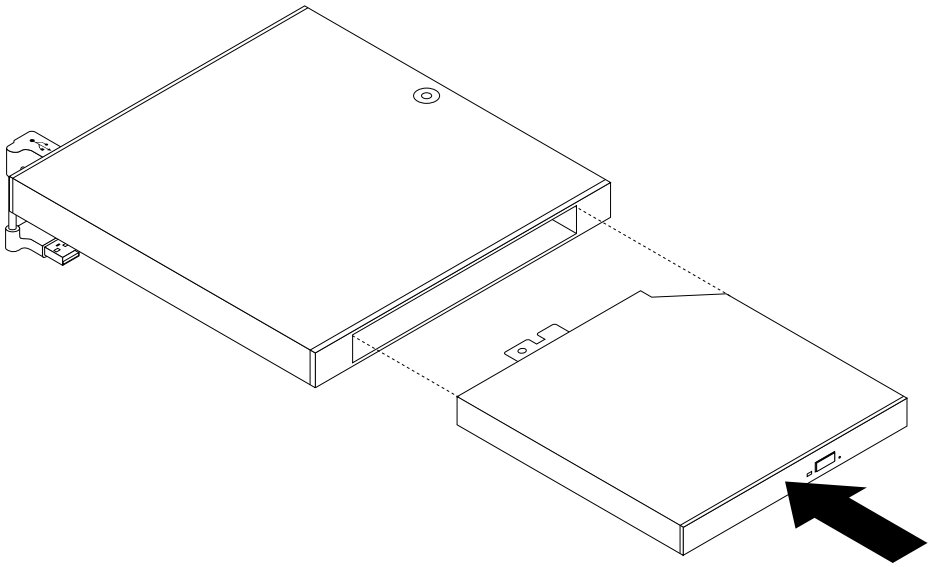

Figure 235. Installing the optical drive into the optical drive box

8. Install the screw that secures the optical drive in the optical drive box.

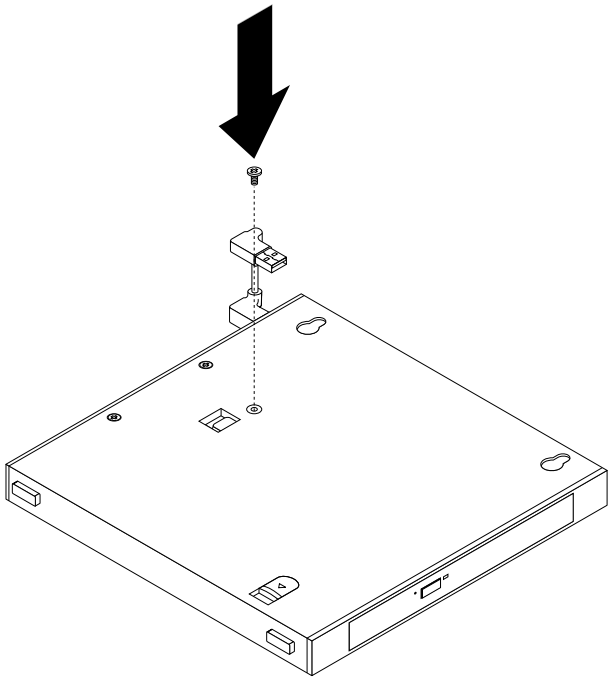

Figure 236. Installing the screw that secures the optical drive

9. Align the two holes in the optical drive box with the two screws on the VESA mount bracket and then slide the optical drive box as shown to install it on the VESA mount bracket.

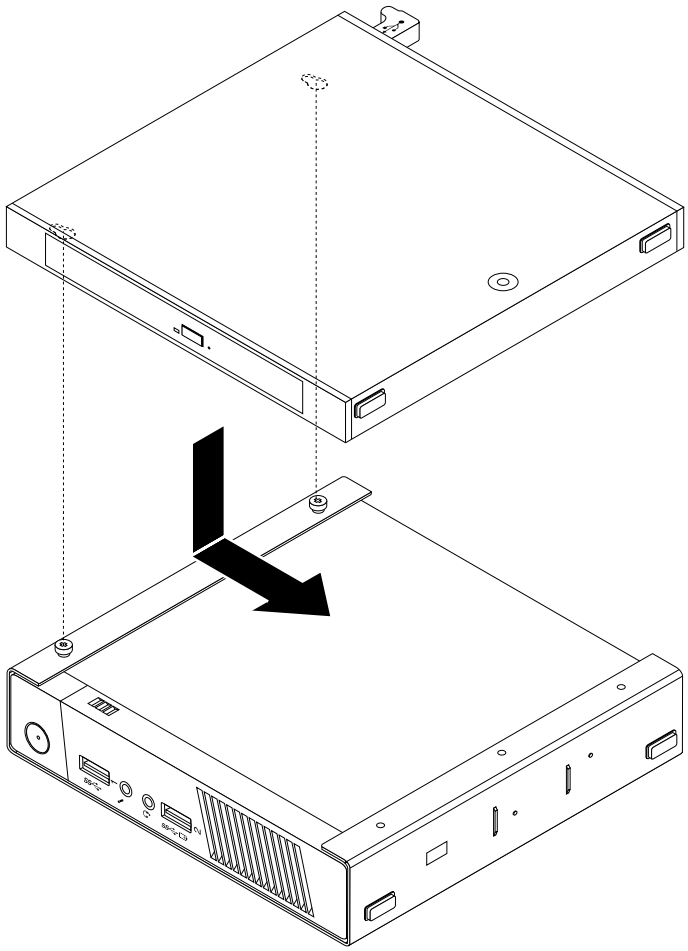

Figure 237. Installing the optical drive box

10. Install the screw that secures the optical drive box on the VESA mount bracket.

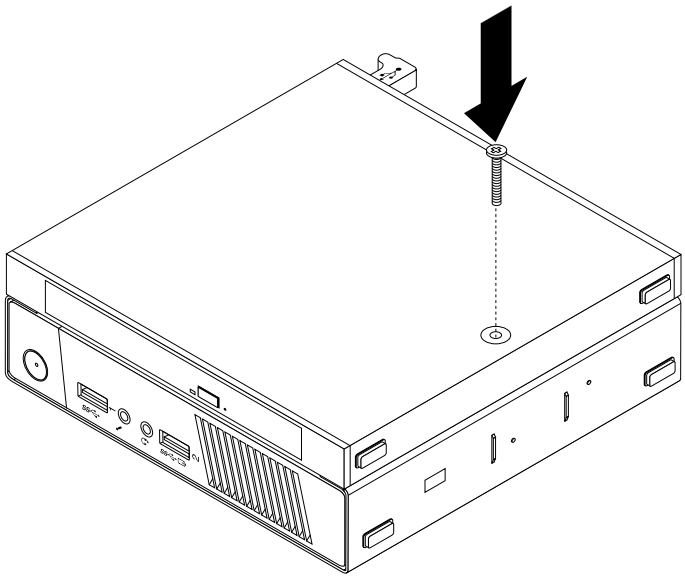

Figure 238. Installing the screw that secures the optical drive box

11. Connect the optical drive cable to a USB connector on the computer. See “Locating connectors on the rear of your computer” on page 87.

Installing or removing the hard disk drive assembly

Attention: Do not open your computer or attempt any repair before reading and understanding the Chapter 1 “Safety information” on page 1.

This section provides instructions on how to install or remove the hard disk drive assembly.

To remove the hard disk drive assembly, do the following:

1. Remove all media from the drives and turn off all attached devices and the computer. Then, disconnect all power cords from electrical outlets and disconnect all cables that are connected to the computer.
2. Remove the computer cover. See “Removing the computer cover” on page 237.
3. Locate the hard disk drive assembly in the computer. See “Locating major FRUs and CRUs” on page 88.
4. Disconnect the signal cable and the power cable from the hard disk drive.

5. Remove the two screws that secure the hard disk drive assembly. Slide the hard disk drive assembly as shown, and then lift the hard disk drive assembly to remove it from the chassis.

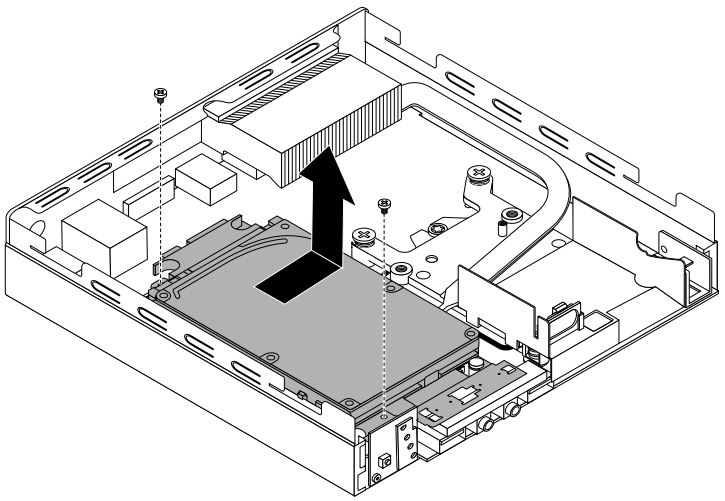

Figure 239. Removing the hard disk drive assembly

To install the hard disk drive assembly, do the following:

1. Position the hard disk drive assembly on the system board so that the two holes in the hard disk drive bracket are aligned with the standoffs on the system board. Slide the hard disk drive assembly as shown until the two screw holes **1** are aligned with the corresponding screw posts on the system board.

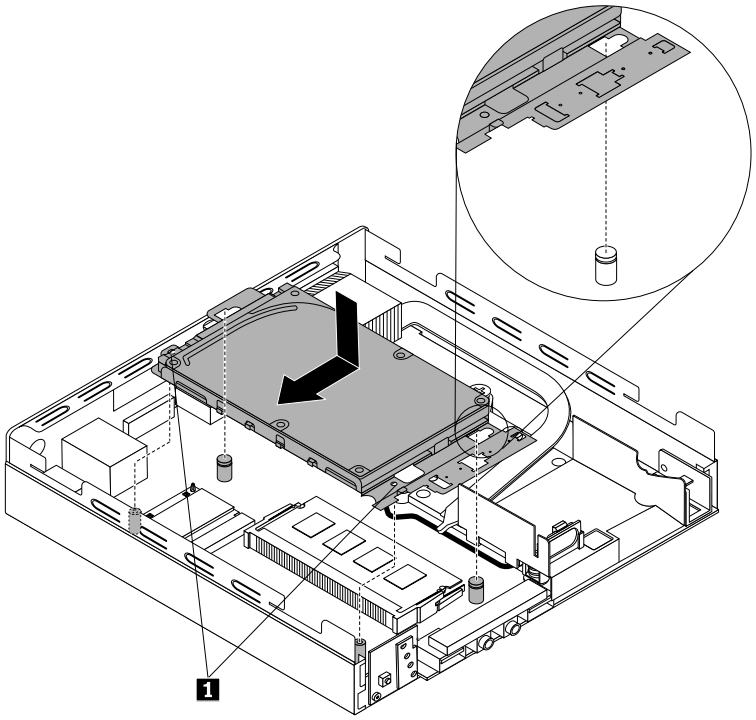

Figure 240. Installing the hard disk drive assembly

2. Install the two screws to secure the hard disk drive assembly.

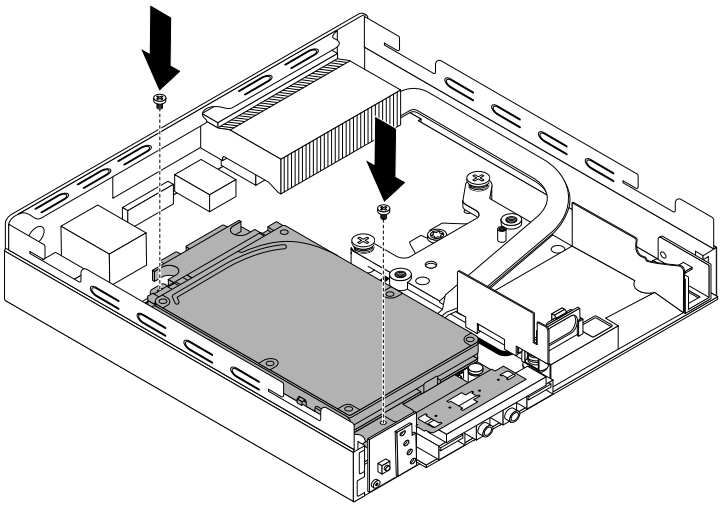

Figure 241. Installing the screws to secure the hard disk drive assembly

3. Connect the signal cable and the power cable to the hard disk drive.

What to do next:

- To work with another piece of hardware, go to the appropriate section.
- To complete the installation or replacement, go to “Completing the parts replacement” on page 286.

Replacing the secondary hard disk drive

Attention: Do not open your computer or attempt any repair before reading and understanding the Chapter 1 “Safety information” on page 1.

This section provides instructions on how to replace the secondary hard disk drive.

Note: The secondary hard disk drive is installed in the optical drive box and is only available on some models.

To replace the secondary hard disk drive, do the following:

1. Remove all media from the drives and turn off all attached devices and the computer. Then, disconnect all power cords from electrical outlets and disconnect all cables that are connected to the computer.
2. Disconnect the secondary hard disk drive cable from the USB connector on the computer.

3. Remove the screw that secures the optical drive box on the VESA mount bracket and then slide the optical drive box as shown to remove it from the VESA mount bracket.

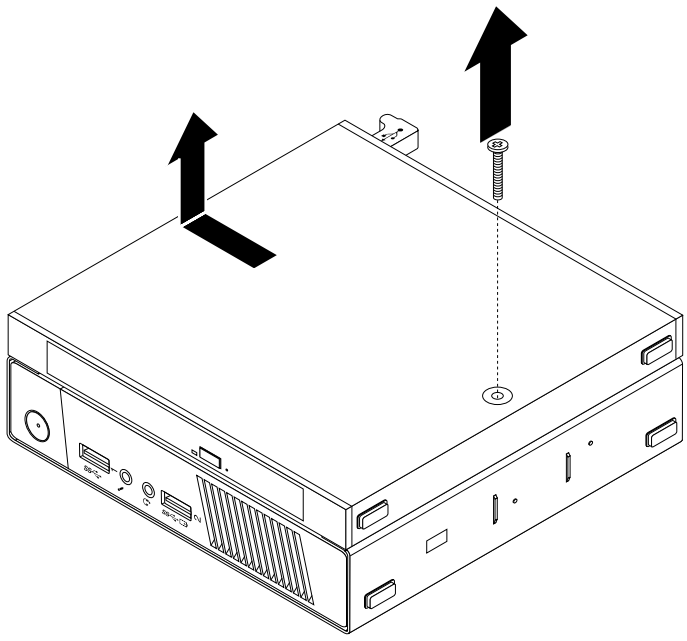

Figure 242. Removing the optical drive box

4. Slide the release button on the optical drive box and then remove the secondary hard disk drive adapter from the optical drive box.

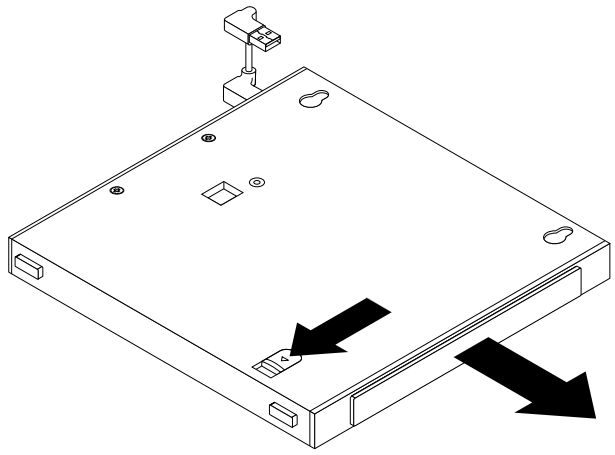

Figure 243. Removing the secondary hard disk drive adapter from the optical drive box

5. Flex the sides of the hard disk drive adapter bracket and then pivot the hard disk drive adapter to remove the adapter from the adapter bracket.

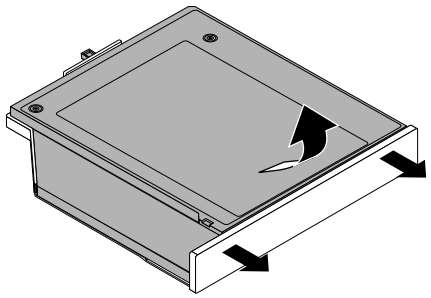

Figure 244. Removing the hard disk drive adapter from the adapter bracket

6. To remove the hard disk drive from the adapter, lift the adapter retaining latch. Slide the hard disk drive towards the retaining latch and then lift the hard disk drive out of the adapter.

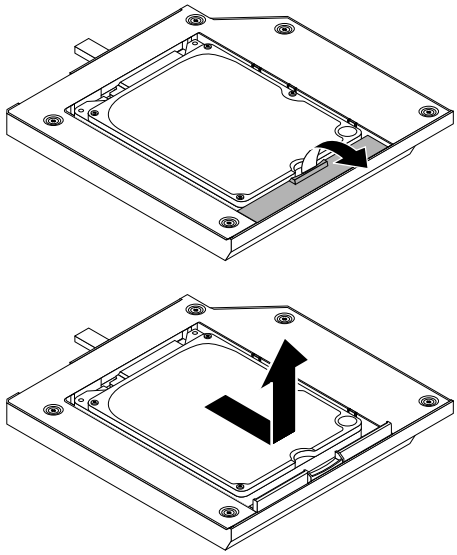

Figure 245. Removing the secondary hard disk drive from the adapter

7. Install the four screws to the new hard disk drive.

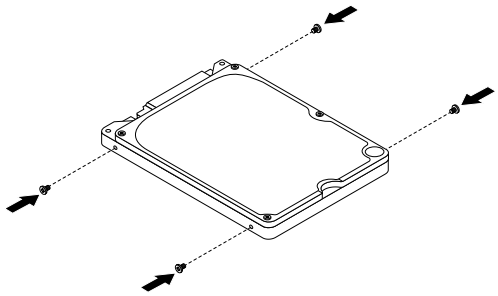

Figure 246. Installing the four screws to the hard disk drive

8. Install the new hard disk drive into the adapter as shown. Then, lower the adapter retaining latch until it snaps into position.

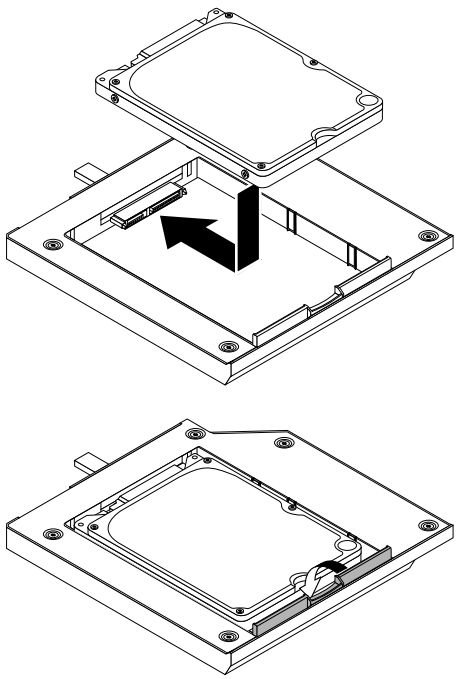

Figure 247. Installing the hard disk drive into the adapter

9. Position the adapter into the adapter bracket and then pivot the adapter downward until it snaps into position.

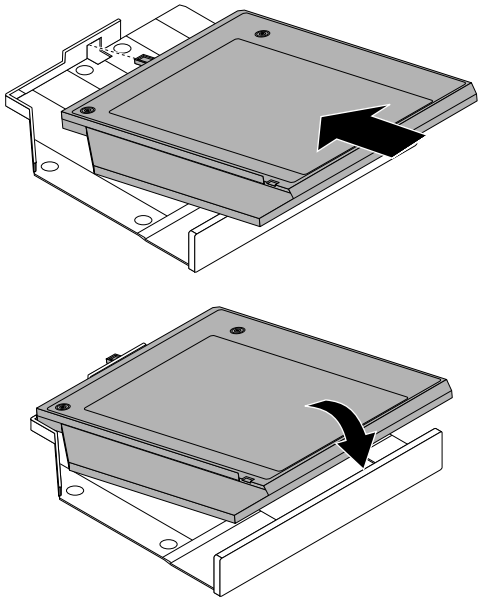

Figure 248. Installing the hard disk drive adapter into the adapter bracket

10. Slide the hard disk drive adapter bracket into the optical drive box until it snaps into position.

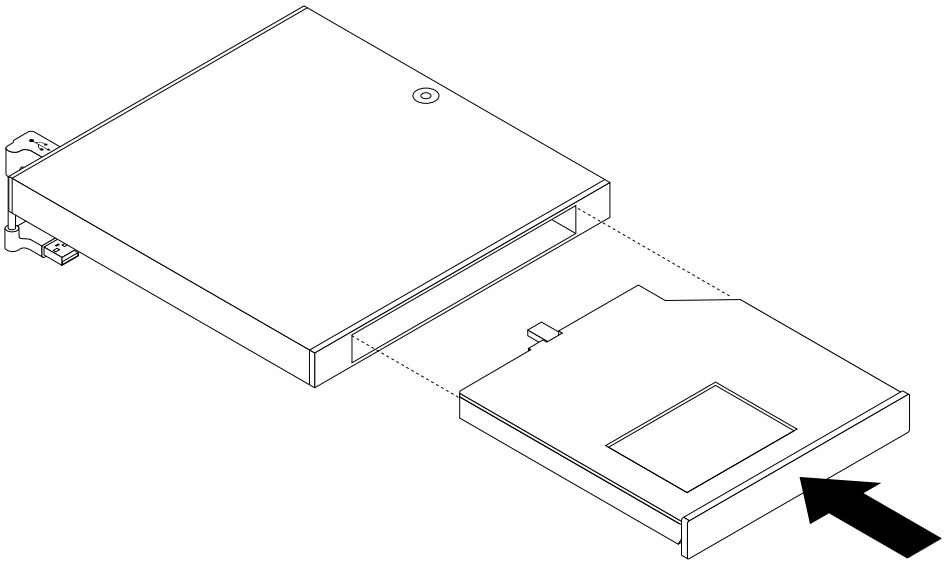

Figure 249. Installing the adapter bracket into the optical drive box

11. Align the two holes in the optical drive box with the two screws on the VESA mount bracket and then slide the optical drive box as shown to install it on the VESA mount bracket.

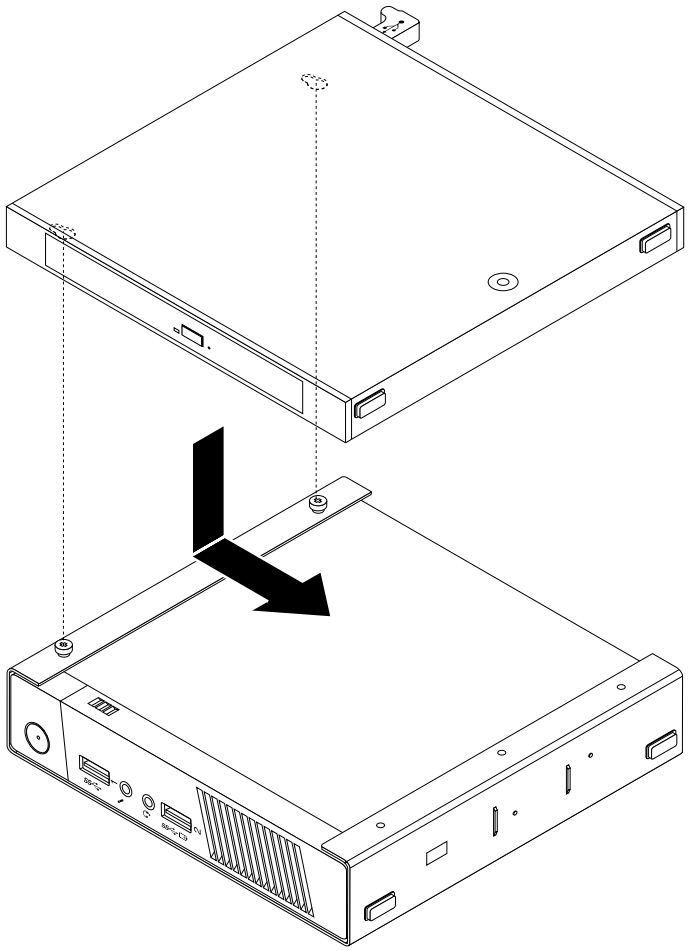

Figure 250. Installing the optical drive box

12. Install the screw that secures the optical drive box on the VESA mount bracket.

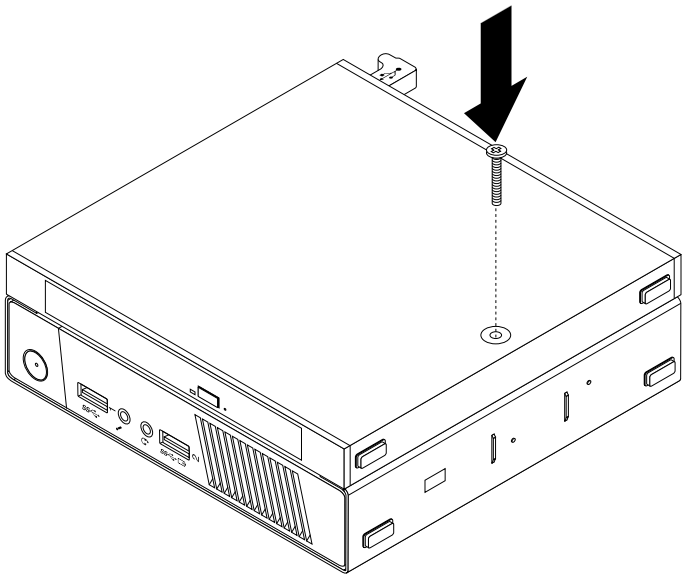

Figure 251. Installing the screw that secures the optical drive box

13. Connect the secondary hard disk drive cable to a USB connector on the computer. See “Locating connectors on the rear of your computer” on page 87.

Installing or removing the I/O box

Attention: Do not open your computer or attempt any repair before reading and understanding the Chapter 1 “Safety information” on page 1.

This section provides instructions on how to install or remove the I/O box.

Note: The I/O box is only available on some models.

The I/O box provides the following connectors for connecting to external devices:

- Four USB 2.0 connectors (two on the front and two on the rear)
- One serial port
- Two PS/2 connectors (one for keyboard and one for mouse)

To remove the I/O box, do the following:

1. Remove all media from the drives and turn off all attached devices and the computer. Then, disconnect all power cords from electrical outlets and disconnect all cables that are connected to the computer.
2. Disconnect the I/O box cable from the USB connector on the computer.

3. Remove the screw that secures the I/O box on the VESA mount bracket and then slide the I/O box as shown to remove it from the VESA mount bracket.

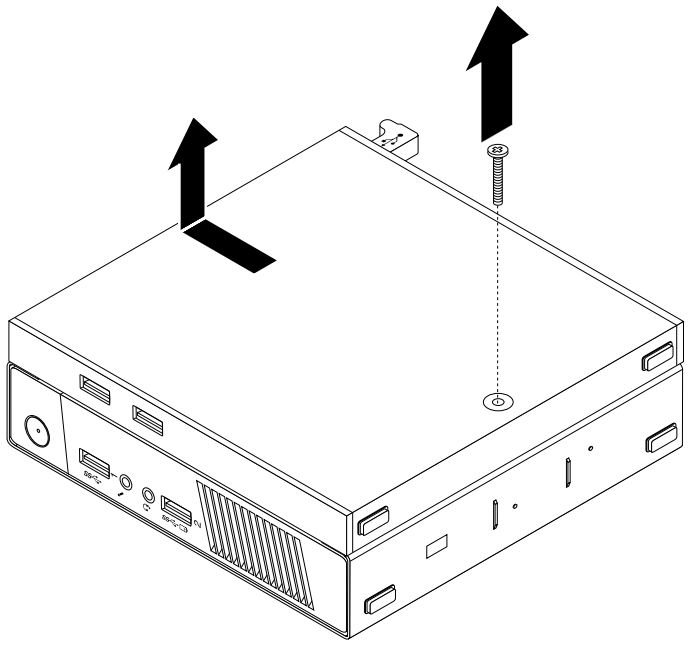

Figure 252. Removing the I/O box

To install the I/O box, do the following:

1. Remove all media from the drives and turn off all attached devices and the computer. Then, disconnect all power cords from electrical outlets and disconnect all cables that are connected to the computer.

2. Align the two holes in the I/O box with the two screws on the VESA mount bracket and then slide the I/O box as shown to install it on the VESA mount bracket.

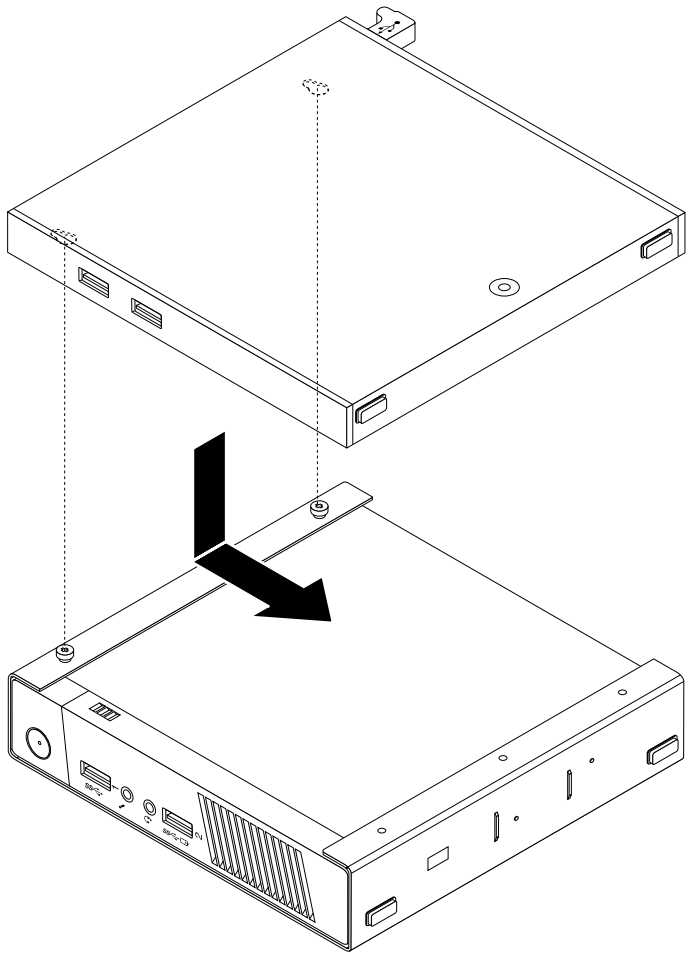

Figure 253. Installing the I/O box

3. Install the screw to secure the I/O box on the VESA mount bracket.

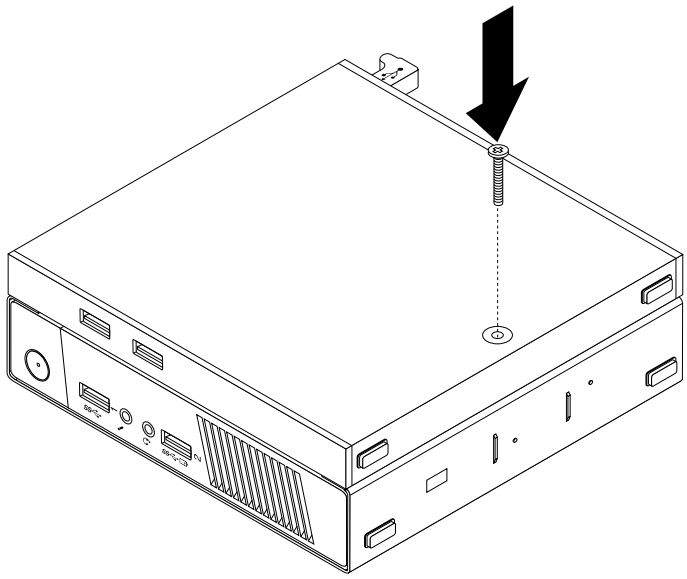

Figure 254. Installing the screw to secure the I/O box

4. Connect the I/O box cable to a USB connector on the rear of your computer. See “Locating connectors on the rear of your computer” on page 87.

Installing or replacing a memory module

Attention: Do not open your computer or attempt any repair before reading and understanding the Chapter 1 “Safety information” on page 1.

This section provides instructions on how to install or replace a memory module.

Your computer has two slots for installing or replacing DDR3 SODIMMs that provide up to a maximum of 16 GB system memory. When installing or replacing a memory module, use 2 GB, 4GB, or 8GB DDR3 SODIMMs in any combination up to a maximum of 16 GB.

To install or replace a memory module, do the following:

1. Remove all media from the drives and turn off all attached devices and the computer. Then, disconnect all power cords from electrical outlets and disconnect all cables that are connected to the computer.
2. Remove the computer cover. See “Removing the computer cover” on page 237.
3. Locate the memory slots. See “Locating parts on the system board” on page 90.
4. Remove the hard disk drive assembly to get access to the memory slots. See “Installing or removing the hard disk drive assembly” on page 251.
5. If you are replacing an old memory module, open the retaining clips and gently pull the memory module out of the memory slot.

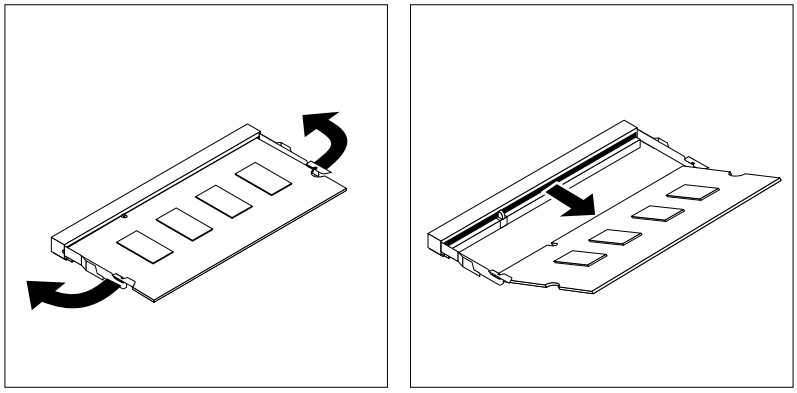

Figure 255. Removing the memory module

6. Insert the notched end **2** of the new memory module into the slot **1**. Press the memory module firmly and pivot the memory module until it snaps into place. Make sure that the memory module is secured in the slot and does not move easily.

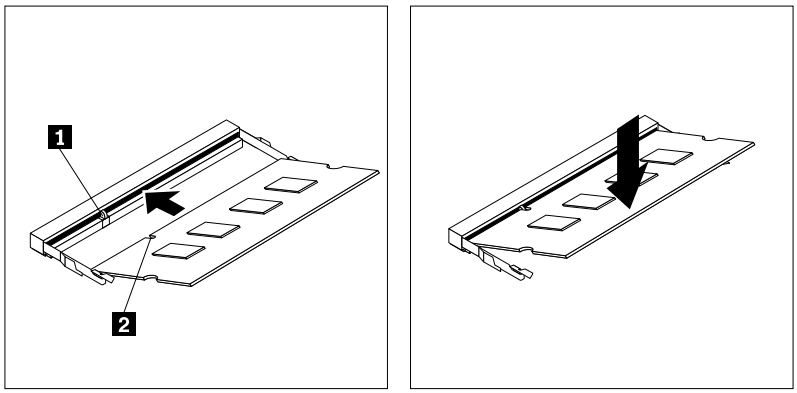

Figure 256. Installing a memory module

7. Reinstall the hard disk drive assembly. See “Installing or removing the hard disk drive assembly” on page 251.

What to do next:

- To work with another piece of hardware, go to the appropriate section.
- To complete the installation or replacement, go to “Completing the parts replacement” on page 286.

Replacing the battery

Attention: Do not open your computer or attempt any repair before reading and understanding the Chapter 1 “Safety information” on page 1.

Your computer has a special type of memory that maintains the date, time, and settings for built-in features, such as parallel-port assignments (configuration). A battery keeps this information active when you turn off the computer.

The battery normally requires no charging or maintenance throughout its life; however, no battery lasts forever. If the battery fails, the date, time, and configuration information (including passwords) are lost. An error message is displayed when you turn on the computer.

Refer to the “Lithium battery notice” in the *Safety, Warranty, and Setup Guide* for information about replacing and disposing of the battery.

To replace the battery, do the following:

1. Remove all media from the drives and turn off all attached devices and the computer. Then, disconnect all power cords from electrical outlets and disconnect all cables that are connected to the computer.
2. Remove the computer cover. See “Removing the computer cover” on page 237.
3. Locate the battery. See “Locating parts on the system board” on page 90.
4. Remove the hard disk drive assembly to get access to the battery. See “Installing or removing the hard disk drive assembly” on page 251.
5. Remove the old battery.

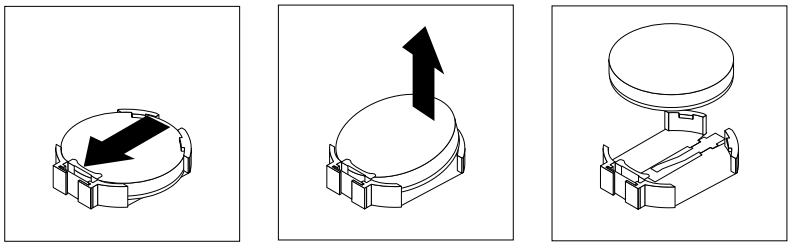

Figure 257. Removing the old battery

6. Install a new battery.

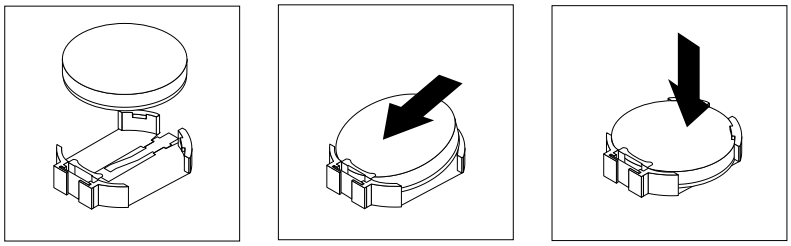

Figure 258. Installing a new battery

7. Reinstall the hard disk drive assembly. See “Installing or removing the hard disk drive assembly” on page 251.
8. Reinstall the computer cover and reconnect the cables. See “Completing the parts replacement” on page 286.

   Note: When the computer is turned on for the first time after replacing the battery, an error message might be displayed. This is normal after replacing the battery.
9. Turn on the computer and all attached devices.
10. Use the Setup Utility program to set the date, time, and any passwords. See Chapter 5 “Using the Setup Utility program” on page 55.

What to do next:

- To work with another piece of hardware, go to the appropriate section.
- To complete the installation or replacement, go to “Completing the parts replacement” on page 286.

Replacing the power switch board

Attention: Do not open your computer or attempt any repair before reading and understanding the Chapter 1 “Safety information” on page 1.

This section provides instructions on how to replace the power switch board.

To replace the power switch board, do the following:

1. Remove all media from the drives and turn off all attached devices and the computer. Then, disconnect all power cords from electrical outlets and disconnect all cables that are connected to the computer.
2. Remove the computer cover. See “Removing the computer cover” on page 237.
3. Locate the power switch board. See “Locating major FRUs and CRUs” on page 88.
4. Remove the hard disk drive assembly. See “Installing or removing the hard disk drive assembly” on page 251.
5. Disconnect the power switch board cable from the corresponding connector on the system board.
6. Remove the screw that secures the power switch board to the computer, and then pull the power switch board to remove it from the computer.

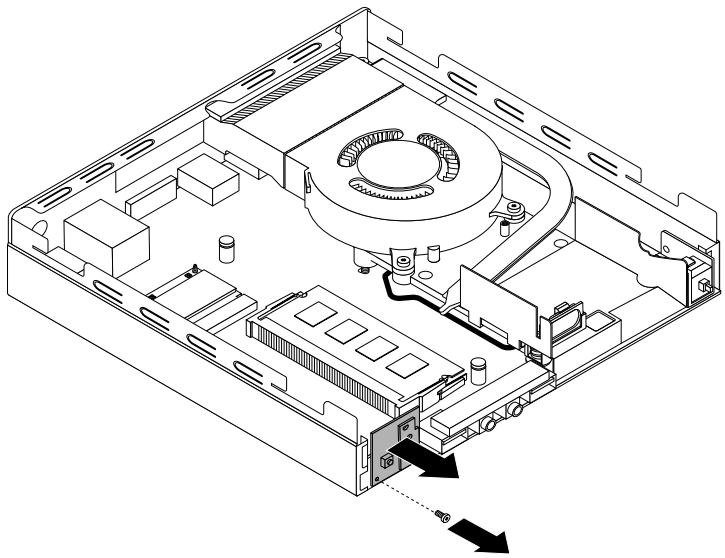

Figure 259. Removing the power switch board

7. Align the hole 1 in the new power switch board with the tab 2 on the computer and position the new power switch board onto the chassis. Then, install the screw to secure the new power switch board on the chassis.

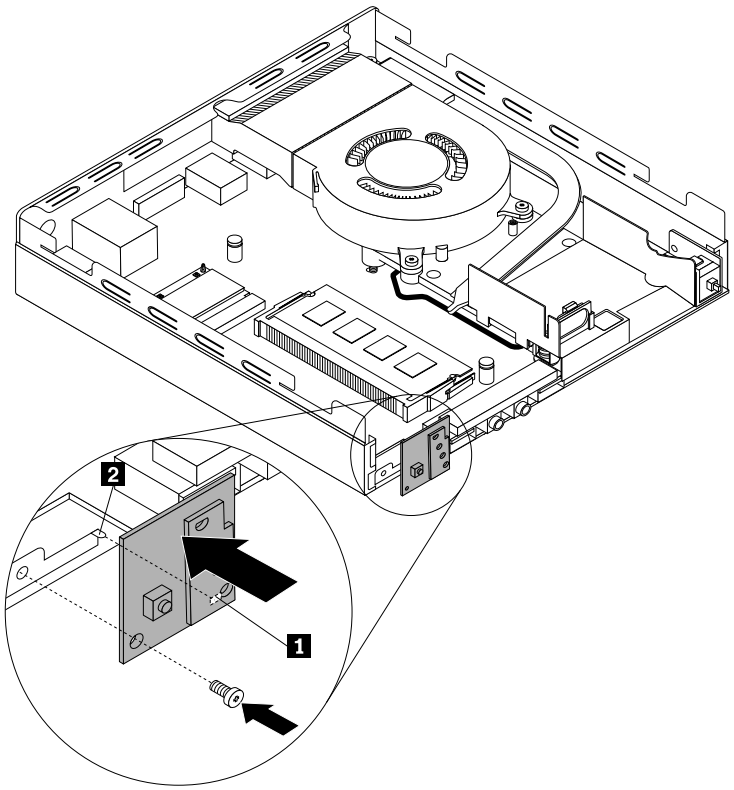

Figure 260. Installing the power switch board

8. Connect the power switch board cable to the power switch board cable connector on the system board. See “Locating parts on the system board” on page 90.
9. Reinstall the hard disk drive assembly. See “Installing or removing the hard disk drive assembly” on page 251.

What to do next:

- To work with another piece of hardware, go to the appropriate section.
- To complete the installation or replacement, go to “Completing the parts replacement” on page 286.

Replacing the Wi-Fi card module

Attention: Do not open your computer or attempt any repair before reading and understanding the Chapter 1 “Safety information” on page 1.

This section provides instructions on how to replace the Wi-Fi card module.

Note: The Wi-Fi card module is only available in some models.

To replace the Wi-Fi card module, do the following:

1. Remove all media from the drives and turn off all attached devices and the computer. Then, disconnect all power cords from electrical outlets and disconnect all cables that are connected to the computer.

2. Remove the computer cover. See “Removing the computer cover” on page 237.
3. Remove the hard disk drive assembly. See “Installing or removing the hard disk drive assembly” on page 251.
4. Locate the Wi-Fi card module in the computer. See “Locating major FRUs and CRUs” on page 88.
5. Disconnect the Wi-Fi antenna cables from the Wi-Fi card module.

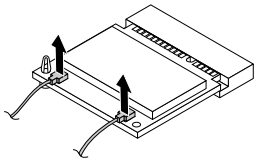

Figure 261. Removing the Wi-Fi antenna cables

6. Carefully pivot the Wi-Fi card module up to release it from the plastic post that secures it. Then, pull the Wi-Fi card module to remove it from the mini PCI Express card slot.

   Note: Do not over pivot the Wi-Fi card module.

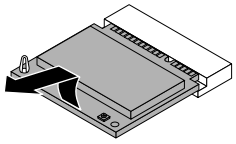

Figure 262. Removing the Wi-Fi card module

7. Insert the new Wi-Fi card module into the mini PCI Express card slot. Then, pivot the Wi-Fi card module downward until it snaps into position and is secured by the plastic post.

   Note: Do not touch the notched edge of the Wi-Fi card module.

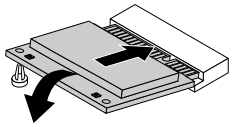

Figure 263. Installing the Wi-Fi card module

8. Connect the Wi-Fi antenna cables to the new Wi-Fi card module.

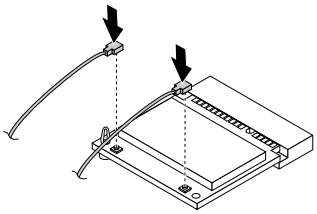

Figure 264. Connecting the Wi-Fi antenna cables

9. Reinstall the hard disk drive assembly. See “Installing or removing the hard disk drive assembly” on page 251.

What to do next:

- To work with another piece of hardware, go to the appropriate section.
- To complete the installation or replacement, go to “Completing the parts replacement” on page 286.

Installing or removing the front Wi-Fi antenna

Attention: Do not open your computer or attempt any repair before reading and understanding the Chapter 1 “Safety information” on page 1.

This section provides instructions on how to install or remove the front Wi-Fi antenna.

Note: The front Wi-Fi antenna is only available on some models.

To install the front Wi-Fi antenna, do the following:

1. Remove all media from the drives and turn off all attached devices and the computer. Then, disconnect all power cords from electrical outlets and disconnect all cables that are connected to the computer.
2. Remove the computer cover. See “Removing the computer cover” on page 237.
3. Remove the hard disk drive assembly. See “Installing or removing the hard disk drive assembly” on page 251.
4. Peel off the paper that protects the sticker on the bottom of the front Wi-Fi antenna.

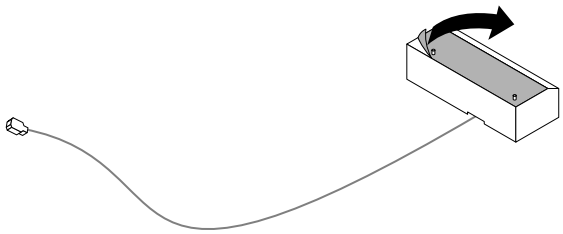

Figure 265. Peeling off the paper that protects the sticker

5. Align the two small columns on the bottom of the front Wi-Fi antenna with the two holes on the hard disk drive bracket as shown. Then, stick the front Wi-Fi antenna onto the hard disk drive bracket.

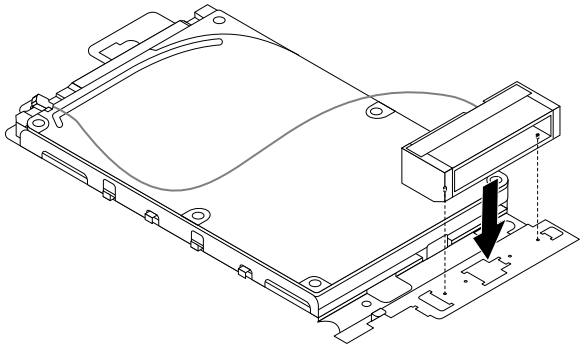

Figure 266. Sticking the front Wi-Fi antenna

6. Route the front Wi-Fi antenna cable through the five hooks on the hard disk drive bracket as shown.

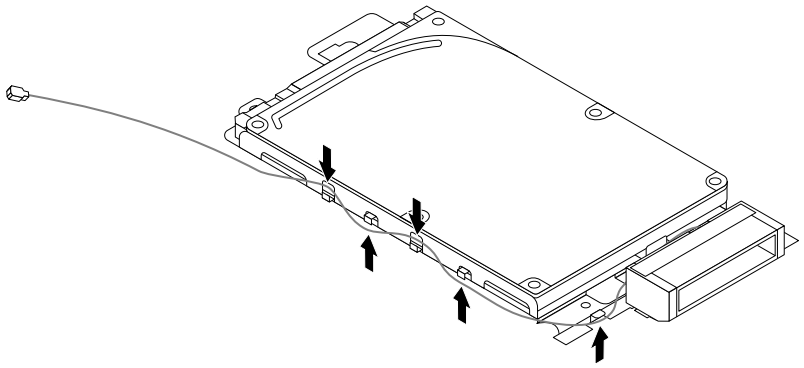

Figure 267. Routing the front Wi-Fi antenna cable

7. Reinstall the hard disk drive assembly without connecting the signal cable and power cable. See “Installing or removing the hard disk drive assembly” on page 251.
8. Route the front Wi-Fi antenna cable as shown, and then connect it to the Wi-Fi card module.

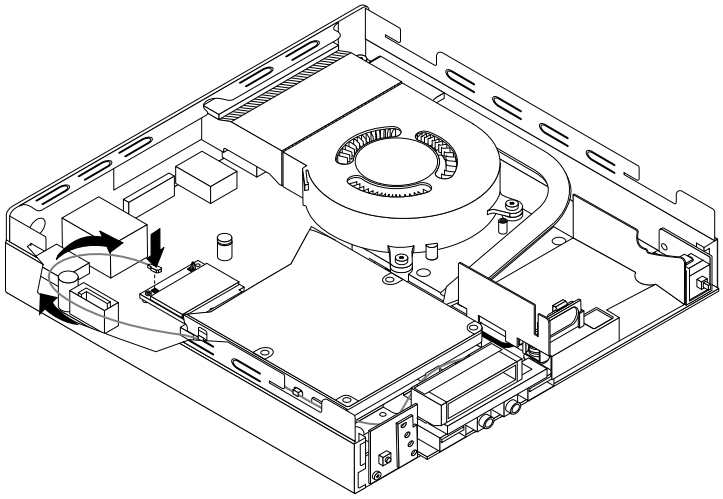

Figure 268. Connecting the front Wi-Fi antenna cable

9. Reconnect the signal cable and power cable to the hard disk drive.

To remove the front Wi-Fi antenna, do the following:

1. Remove all media from the drives and turn off all attached devices and the computer. Then, disconnect all power cords from electrical outlets and disconnect all cables that are connected to the computer.
2. Disconnect the signal cable and power cable from the hard disk drive.
3. Disconnect the front Wi-Fi antenna cable from the Wi-Fi card module.
4. Remove the hard disk drive assembly. See “Installing or removing the hard disk drive assembly” on page 251.

5. Release the front Wi-Fi antenna cable from the hooks on the hard disk drive bracket. Then, unstick the front Wi-Fi antenna from the hard disk drive bracket.

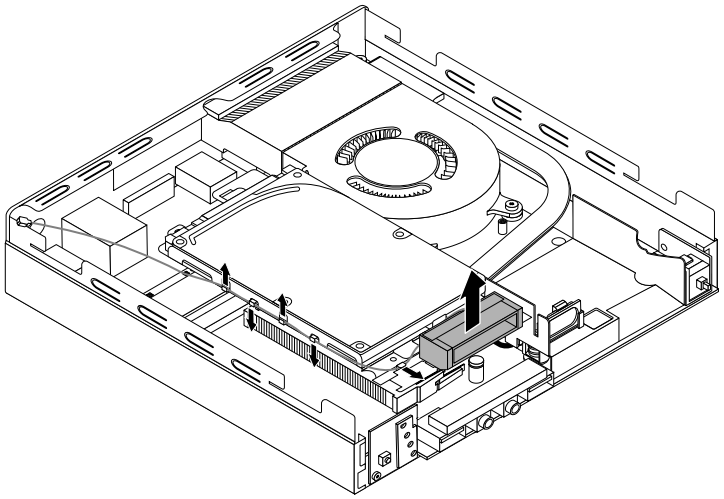

Figure 269. Removing the front Wi-Fi antenna cable

What to do next:

- To work with another piece of hardware, go to the appropriate section.
- To complete the installation or replacement, go to "Completing the parts replacement" on page 286.

Installing or removing the rear Wi-Fi antenna

Attention: Do not open your computer or attempt any repair before reading and understanding the Chapter 1 "Safety information" on page 1.

This section provides instructions on how to install or remove the rear Wi-Fi antenna.

Note: The rear Wi-Fi antenna is only available on some models.

To install the rear Wi-Fi antenna, do the following:

1. Remove all media from the drives and turn off all attached devices and the computer. Then, disconnect all power cords from electrical outlets and disconnect all cables that are connected to the computer.
2. Install the rear Wi-Fi antenna to the rear Wi-Fi antenna cable connector attached on the rear of the computer.

3. Adjust the angle of the rear antenna to lower the risk of breaking the antenna by accident.

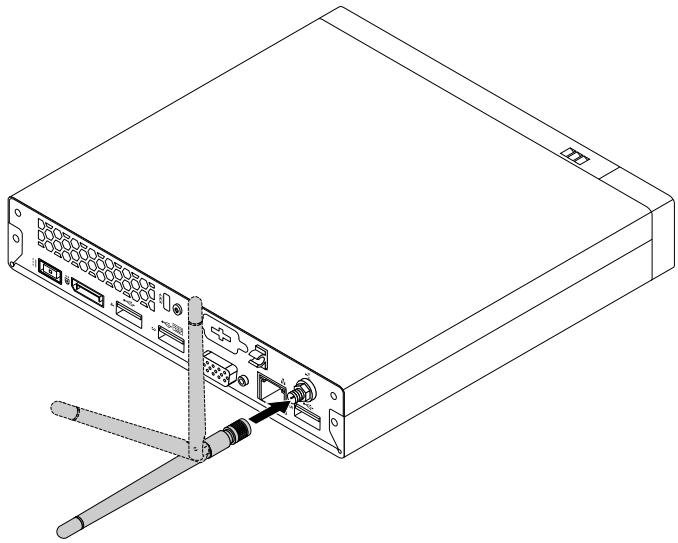

Figure 270. Installing the rear Wi-Fi antenna

To remove the rear Wi-Fi antenna, do the following:

1. Remove all media from the drives and turn off all attached devices and the computer. Then, disconnect all power cords from electrical outlets and disconnect all cables that are connected to the computer.
2. Straighten the rear Wi-Fi antenna so that it can be more easily twisted.
3. Hold the thicker end of the rear Wi-Fi antenna and unscrew the Wi-Fi antenna from the rear of the computer.

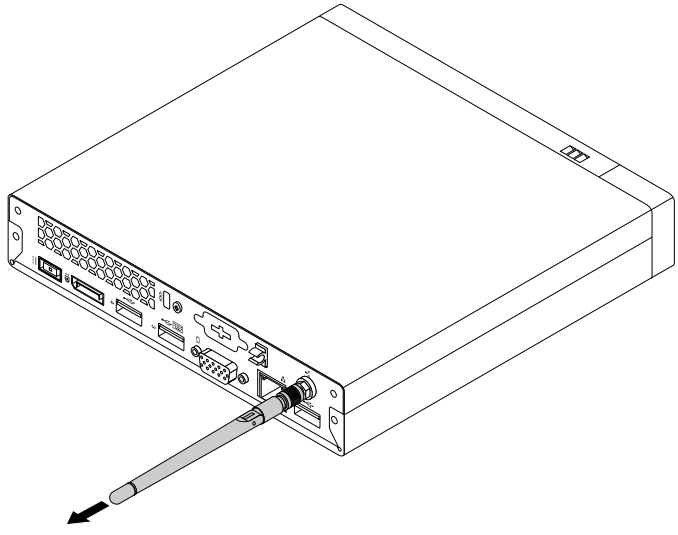

Figure 271. Removing the rear Wi-Fi antenna

Replacing the internal speaker

Attention: Do not open your computer or attempt any repair before reading and understanding the Chapter 1 “Safety information” on page 1.

This section provides instructions on how to replace the internal speaker.

To replace the internal speaker, do the following:

1. Remove all media from the drives and turn off all attached devices and the computer. Then, disconnect all power cords from electrical outlets and disconnect all cables that are connected to the computer.
2. Remove the computer cover. See “Removing the computer cover” on page 237.
3. Locate the internal speaker in the computer. See “Locating major FRUs and CRUs” on page 88.
4. Remove the hard disk drive assembly. See “Installing or removing the hard disk drive assembly” on page 251.
5. Disconnect the internal speaker cable from the system board.
6. Release the internal speaker cable from the retaining clip on the side of the thermal module bracket.

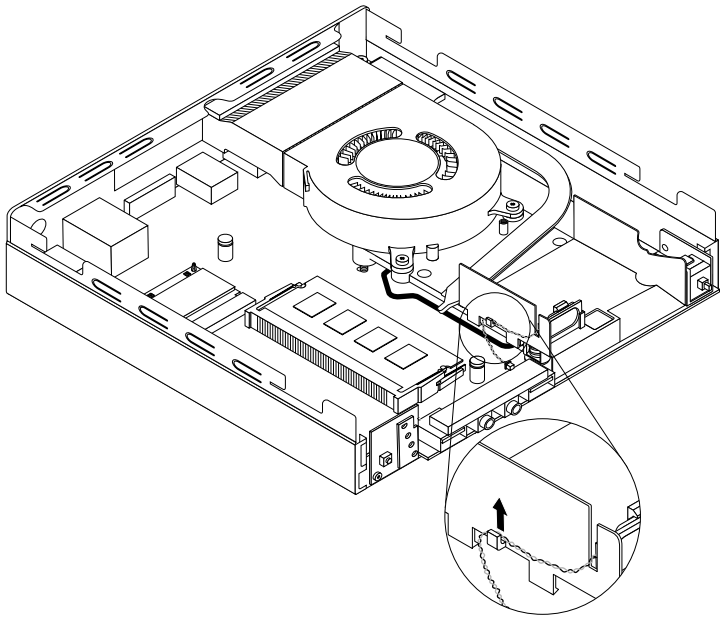

Figure 272. Releasing the internal speaker cable

7. Press the tab **1** that secures the internal speaker as shown and then lift the internal speaker out of the internal speaker holder.

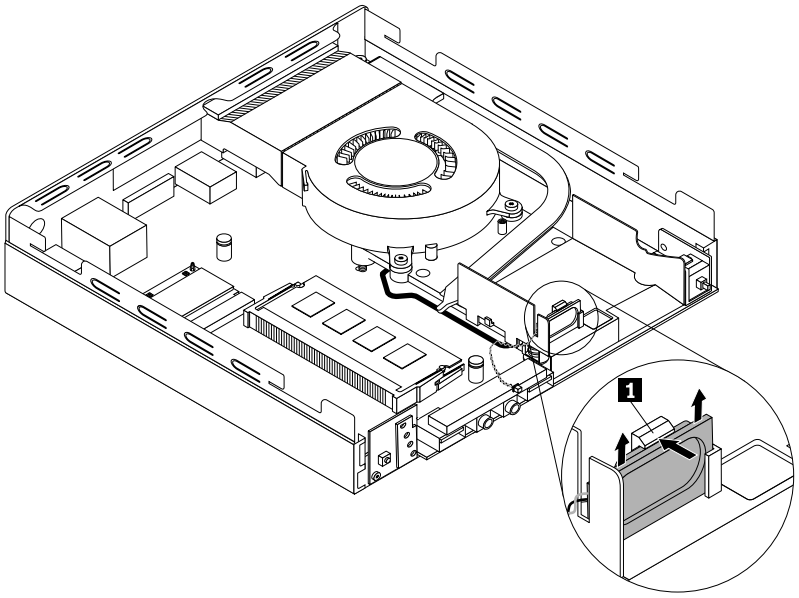

Figure 273. Removing the internal speaker

8. Press the tab **1** as shown and insert the new internal speaker into the internal speaker holder until the new internal speaker snaps into position and is secured by the tab **1**.

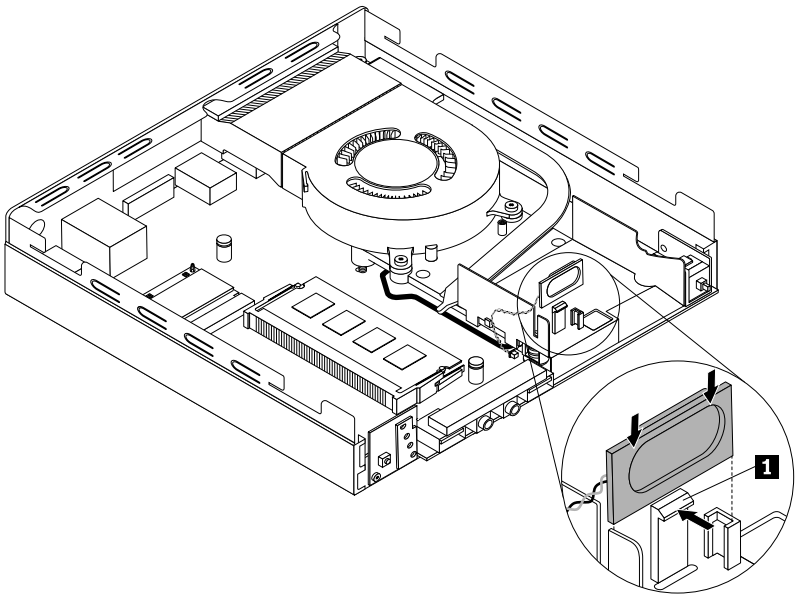

Figure 274. Installing the internal speaker

9. Secure the cable of the new internal speaker in the retaining clip on the side of the thermal module bracket.

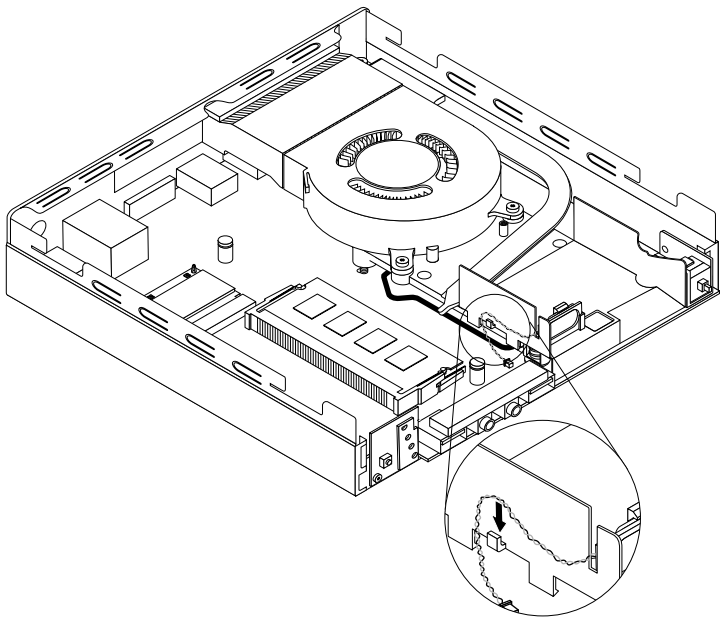

Figure 275. Securing the internal speaker cable

10. Connect the cable of the new internal speaker to the internal speaker connector on the system board. See “Locating parts on the system board” on page 90.
11. Reinstall the hard disk drive assembly. See “Installing or removing the hard disk drive assembly” on page 251.

What to do next:

- To work with another piece of hardware, go to the appropriate section.
- To complete the installation or replacement, go to “Completing the parts replacement” on page 286.

Replacing the cover presence switch

Attention: Do not open your computer or attempt any repair before reading and understanding the Chapter 1 “Safety information” on page 1.

This section provides instructions on how to replace the cover presence switch (also known as intrusion switch).

To replace the cover presence switch, do the following:

1. Remove all media from the drives and turn off all attached devices and the computer. Then, disconnect all power cords from electrical outlets and disconnect all cables that are connected to the computer.
2. Remove the computer cover. See “Removing the computer cover” on page 237.
3. Locate the cover presence switch in the computer. See “Locating major FRUs and CRUs” on page 88.
4. Disconnect the cover presence switch cable from the system board.

5. Pull the cover presence switch to remove it from the heat sink bracket.

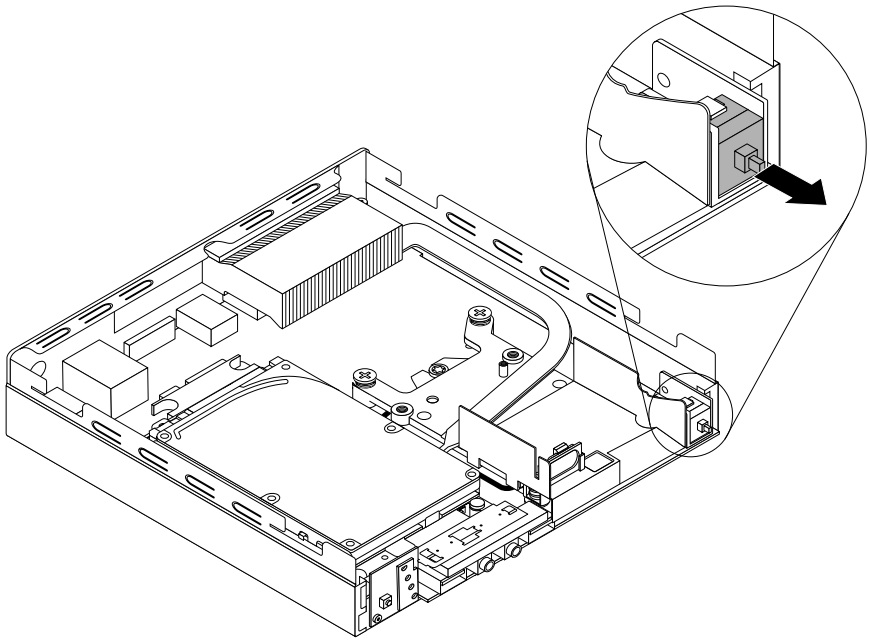

Figure 276. Removing the cover presence switch

6. Attach the new cover presence switch to the thermal module.

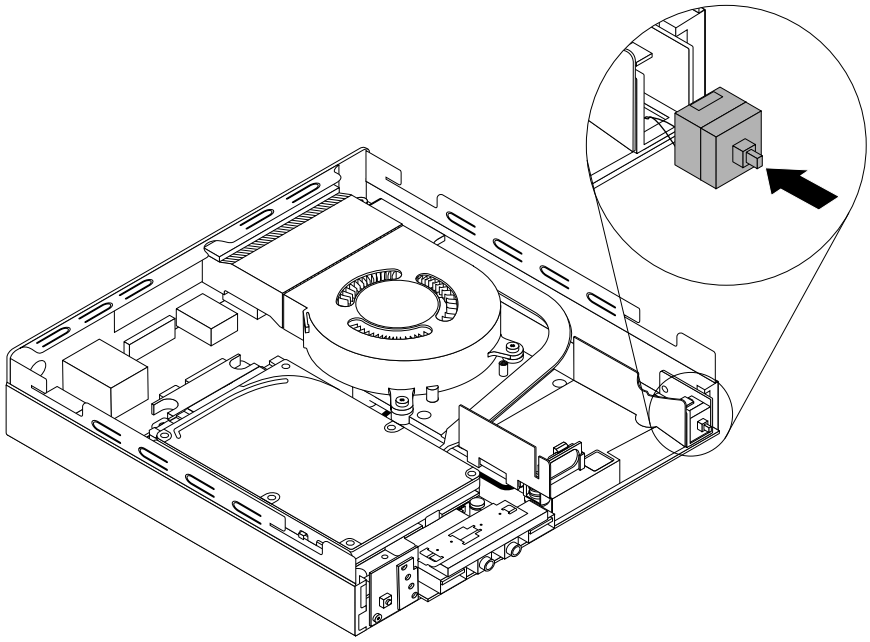

Figure 277. Installing the cover presence switch

7. Connect the cable of the new cover presence switch to the cover presence switch connector on the system board. See “Locating parts on the system board” on page 90.

What to do next:

- To work with another piece of hardware, go to the appropriate section.
- To complete the installation or replacement, go to “Completing the parts replacement” on page 286.

Replacing the system fan

Attention: Do not open your computer or attempt any repair before reading and understanding the Chapter 1 “Safety information” on page 1.

This section provides instructions on how to replace the system fan.

CAUTION:
Hazardous moving parts. Keep fingers and other body parts away.

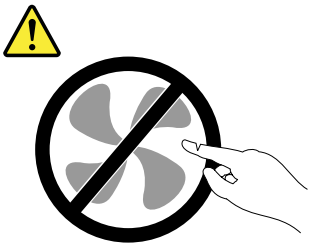

To replace the system fan, do the following:

1. Remove all media from the drives and turn off all attached devices and the computer. Then, disconnect all power cords from electrical outlets and disconnect all cables that are connected to the computer.
2. Remove the computer cover. See “Removing the computer cover” on page 237.
3. Locate the system fan in the computer. See “Locating major FRUs and CRUs” on page 88.
4. Disconnect the system fan cable from the system board.

5. Remove the three screws that secure the system fan to the thermal module, and then lift the system fan to remove it from the computer.

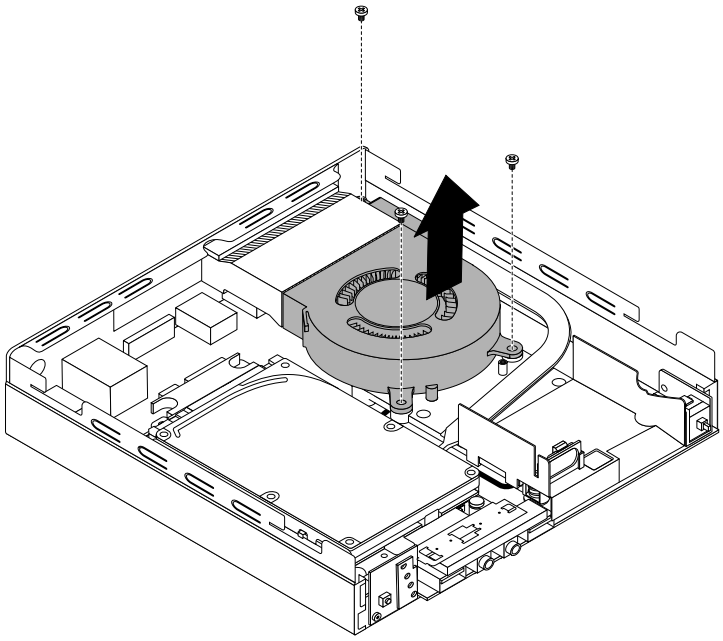

Figure 278. Removing the system fan

6. Position the new system fan on the chassis so that the three screw holes in the new system fan are aligned with the screw posts on the thermal module. Then, install the three screws to secure the new system fan to the computer.

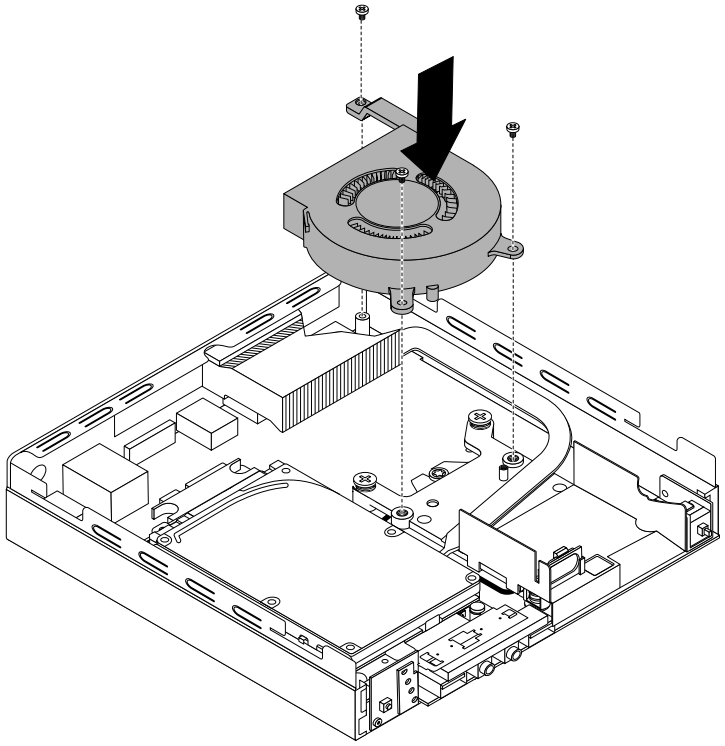

Figure 279. Installing the system fan

7. Connect the cable of the new system fan to the system fan connector on the system board. See “Locating parts on the system board” on page 90.

What to do next:

- To work with another piece of hardware, go to the appropriate section.
- To complete the installation or replacement, go to “Completing the parts replacement” on page 286.

Replacing the thermal module

This section provides instructions on how to replace the thermal module.

Attention: Do not open your computer or attempt any repair before reading and understanding the Chapter 1 “Safety information” on page 1.

CAUTION:



The thermal module might be very hot. Before you open the computer cover, turn off the computer and wait several minutes until the computer is cool.

To replace the thermal module, do the following:

1. Remove all media from the drives and turn off all attached devices and the computer. Then, disconnect all power cords from electrical outlets and disconnect all cables that are connected to the computer.

2. Remove the computer cover. See “Removing the computer cover” on page 237.
3. Locate the thermal module in the computer. See “Locating major FRUs and CRUs” on page 88.
4. Remove the internal speaker. See “Replacing the internal speaker” on page 271.
5. Remove the cover presence switch. See “Replacing the cover presence switch” on page 274.
6. Remove the system fan. See “Locating major FRUs and CRUs” on page 88.
7. Follow this sequence to remove the four screws that secure the thermal module to the system board:
   a. Partially remove screw **1**, then fully remove screw **2**, and then fully remove screw **1**.
   b. Partially remove screw **3**, then fully remove screw **4**, and then fully remove screw **3**.

   Lift and pull the thermal module to remove it from the system board.

Notes:

- Carefully remove the four screws from the system board to avoid any possible damage to the system board. The four screws cannot be removed from the thermal module.
- Do not touch the thermal grease while handling the thermal module.

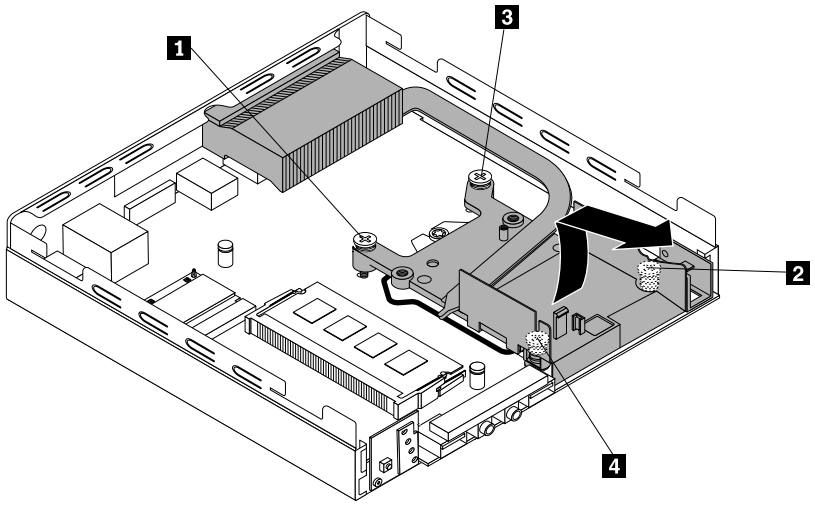

Figure 280. Removing the thermal module

8. Install the new thermal module into the chassis as shown. Ensure that the four screws on the new thermal module are aligned with corresponding holes in the system board.

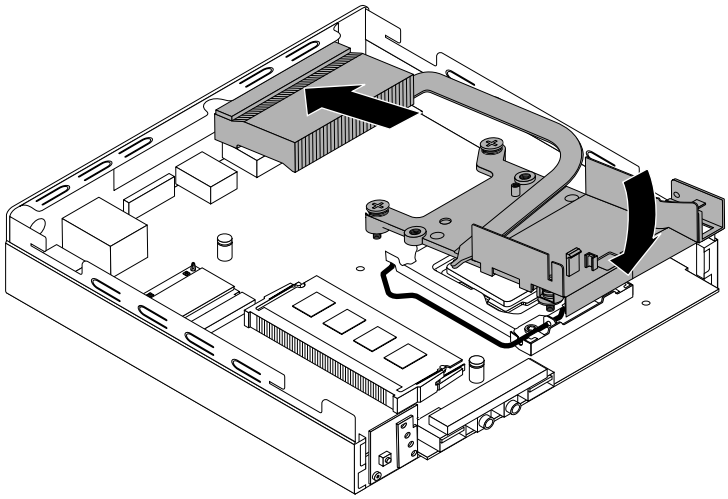

Figure 281. Installing the thermal module

9. Follow the clockwise sequence of **2**, **4**, **1**, and **3** to install the four screws to secure the new thermal module. Do not over-tighten the screws.
10. Reinstall the cover presence switch. See “Replacing the cover presence switch” on page 274.
11. Reinstall the internal speaker. See “Replacing the internal speaker” on page 271.

What to do next:

- To work with another piece of hardware, go to the appropriate section.
- To complete the installation or replacement, go to “Completing the parts replacement” on page 286.

Replacing the microprocessor

Attention: Do not open your computer or attempt any repair before reading and understanding the Chapter 1 “Safety information” on page 1.

This section provides instructions on how to replace the microprocessor.

CAUTION:



The thermal module and microprocessor might be very hot. Before you open the computer cover, turn off the computer and wait several minutes until the computer is cool.

To replace the microprocessor, do the following:

1. Remove all media from the drives and turn off all attached devices and the computer. Then, disconnect all power cords from electrical outlets and disconnect all cables that are connected to the computer.
2. Remove the computer cover. See “Removing the computer cover” on page 237.
3. Remove the thermal module. See “Removing the computer cover” on page 237.

   Note: Place the thermal module on its back so that the thermal grease on the bottom of it does not get in contact with anything.

4. Lift the small handle **1** and open the retainer **2** to access the microprocessor **3**.

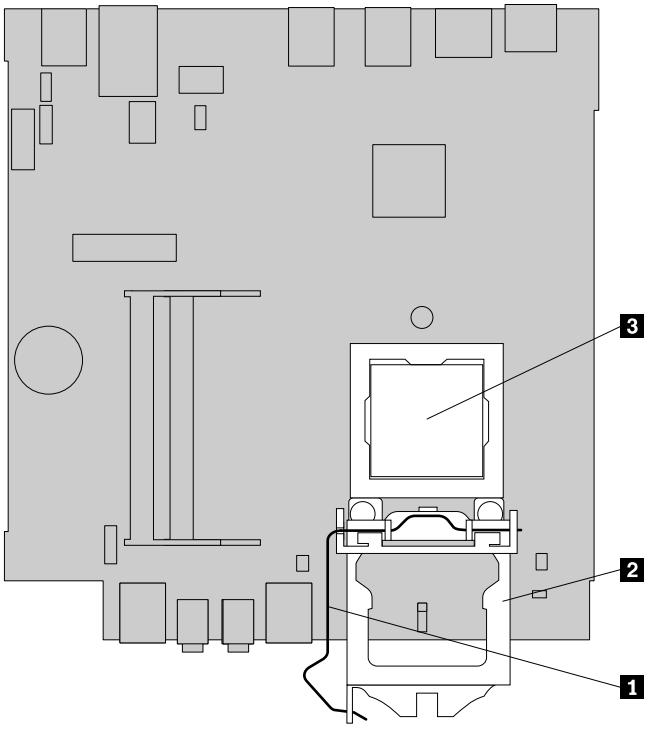

Figure 282. Accessing the microprocessor

5. Lift the microprocessor straight up and out of the microprocessor socket.

Notes:

- Your microprocessor and socket might look different from the one illustrated.
- Touch only the edges of the microprocessor. Do not touch the gold contacts on the bottom.
- Do not drop anything onto the microprocessor socket while it is exposed. The socket pins must be kept as clean as possible.

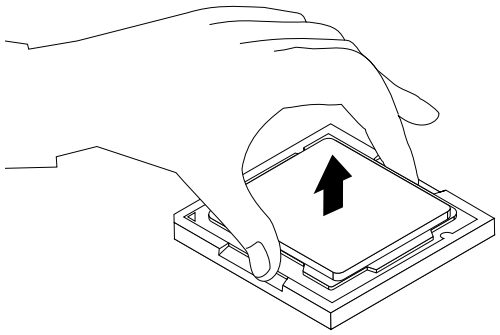

Figure 283. Removing the microprocessor

6. Ensure that the small handle is in the raised position and the microprocessor retainer is fully open.
7. Remove the protective cover that protects the gold contacts of the new microprocessor.

8. Note the orientation of the new microprocessor. Hold the new microprocessor by its edges and align the notches 1 on it with the tabs 2 in the microprocessor socket. Then, carefully lower the new microprocessor straight down into the microprocessor socket.

   Note: The small triangle 3 on one corner of the new microprocessor is the microprocessor orientation indicator. The new microprocessor is in the correct orientation when this indicator points to the beveled corner 4 of the microprocessor socket.

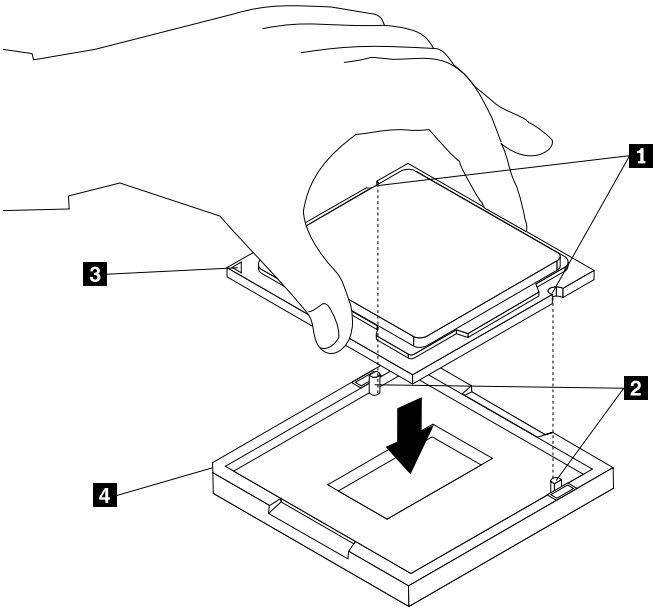

Figure 284. Installing the microprocessor

9. Close the microprocessor retainer and lock it into position with the small handle to secure the new microprocessor in the socket.
10. Reinstall the thermal module. See “Replacing the thermal module” on page 278.

What to do next:

- To work with another piece of hardware, go to the appropriate section.
- To complete the installation or replacement, go to “Completing the parts replacement” on page 286.

Replacing the system board

Attention: Do not open your computer or attempt any repair before reading and understanding the Chapter 1 “Safety information” on page 1.

This section provides instructions on how to replace the system board.

CAUTION:



The thermal module and microprocessor might be very hot. Before you open the computer cover, turn off the computer and wait several minutes until the computer is cool.

To replace the system board, do the following:

1. Remove all media from the drives and turn off all attached devices and the computer. Then, disconnect all power cords from electrical outlets and disconnect all cables that are connected to the computer.
2. Remove the computer cover. See “Removing the computer cover” on page 237.
3. Remove the hard disk drive assembly. See “Installing or removing the hard disk drive assembly” on page 251.
4. Remove all memory modules that are currently installed. See “Installing or replacing a memory module” on page 262.
5. Remove the system fan. See “Replacing the system fan” on page 276.
6. Remove the thermal module. See “Replacing the thermal module” on page 278.
7. Remove the Wi-Fi card module if your computer has one. See “Replacing the Wi-Fi card module” on page 266.
8. Record the cable routing and cable connections and then disconnect all cables from the system board.
9. Remove the five screws that secure the system board by following the sequence shown in the following illustration.

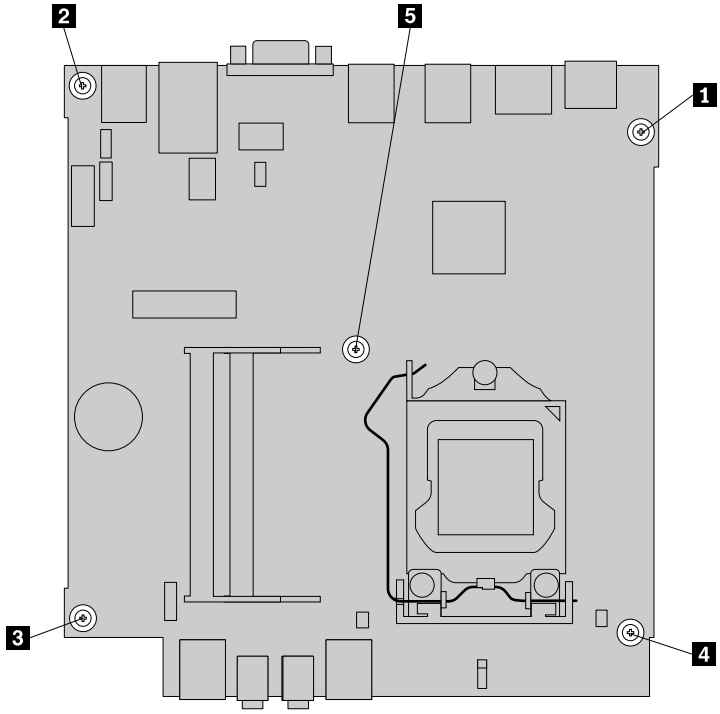

Figure 285. Removing the five screws to secure the system board

10. Carefully pivot the failing system board upward to remove it out of the chassis.

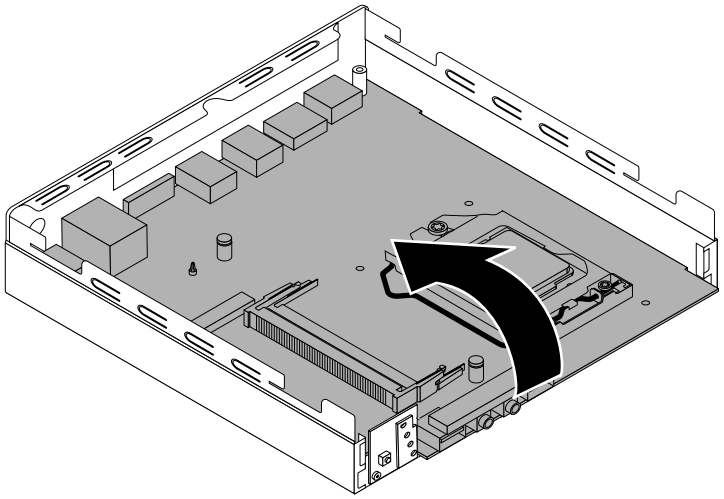

Figure 286. Removing the system board

11. Remove the microprocessor from the failing system board and install it on the new system board. See “Replacing the microprocessor” on page 280.
12. Install the new system board into the chassis by aligning the five screw holes in the new system board with the corresponding mounting studs on the chassis. Then, install the five screws to secure the system board by installing screw **5** to screw **1** as shown in the following illustration.

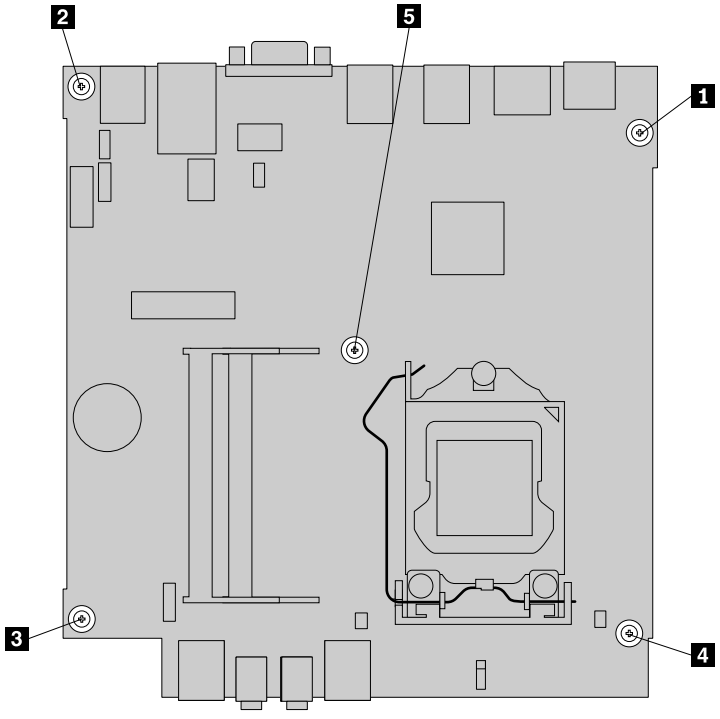

Figure 287. Installing the five screws to secure the system board

13. Reinstall the thermal module. See “Replacing the thermal module” on page 278.

14. Reinstall the system fan. See “Replacing the system fan” on page 276.
15. Reinstall the Wi-Fi card module if you have removed it. See “Replacing the Wi-Fi card module” on page 266.
16. Install all memory modules removed from the failing system board onto the new system board. See “Installing or replacing a memory module” on page 262.
17. Reinstall the hard disk drive assembly. See “Installing or removing the hard disk drive assembly” on page 251.
18. Refer to your record to connect cables to the new system board. You also can refer to “Locating parts on the system board” on page 90 to help you locate the connectors on the system board and connect cables.
19. To complete the replacement, go to “Completing the parts replacement” on page 286.

The failing system board must be returned with a microprocessor socket cover to protect the pins during shipping and handling.

To install the microprocessor socket cover, do the following:

1. After you have removed the microprocessor from the failing system board, close the microprocessor retainer and then put the lever to the locked position to secure the retainer in place.
2. Note the orientation of the socket cover, and install one side of the socket cover into the microprocessor socket. Carefully press the other side of the socket cover downward until the socket cover snaps into position.

   Note: Your microprocessor socket and cover might look slightly different from the illustration.

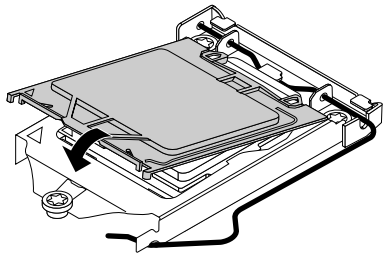

Figure 288. Installing the microprocessor socket cover

3. Carefully check the four corners of the socket cover to ensure that the cover is secured.
4. Follow any additional instructions that are included with the replacement part you received.

What to do next:

- To work with another piece of hardware, go to the appropriate section.
- To complete the installation or replacement, go to “Completing the parts replacement” on page 286.

Replacing the keyboard or mouse

Attention: Do not open your computer or attempt any repair before reading and understanding the Chapter 1 “Safety information” on page 1.

This section provides instructions on how to replace the keyboard or mouse.

To replace the keyboard or mouse, do the following:

1. Disconnect the old keyboard cable or mouse cable from the computer.
2. Connect a new keyboard or mouse to one of the USB connectors on the computer. Depending on where you want to connect the new keyboard or mouse, see “Locating connectors, controls, and indicators on the front of your computer” on page 86 or “Locating connectors on the rear of your computer” on page 87.

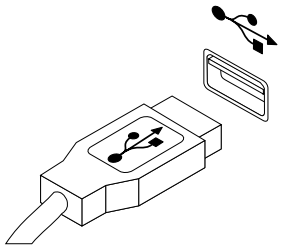

Figure 289. Connecting the USB keyboard or mouse

Completing the parts replacement

After completing the installation or replacement of all parts, you need to reinstall the computer cover and reconnect cables. Depending on the parts you installed or replaced, you might need to confirm the updated information in the Setup Utility program. Refer to Chapter 5 “Using the Setup Utility program” on page 55.

To reinstall the computer cover and reconnect cables to your computer, do the following:

1. Ensure that all components have been reassembled correctly and that no tools or loose screws are left inside your computer. See “Locating major FRUs and CRUs” on page 88 for the locations of various components in your computer.
2. Before reinstalling the computer cover, ensure that the cables are routed correctly. Keep cables clear of the hinges and sides of the computer chassis to avoid interference with reinstalling the computer cover.

3. Position the computer cover on the chassis and then push the cover to the rear of the computer until it snaps into position.

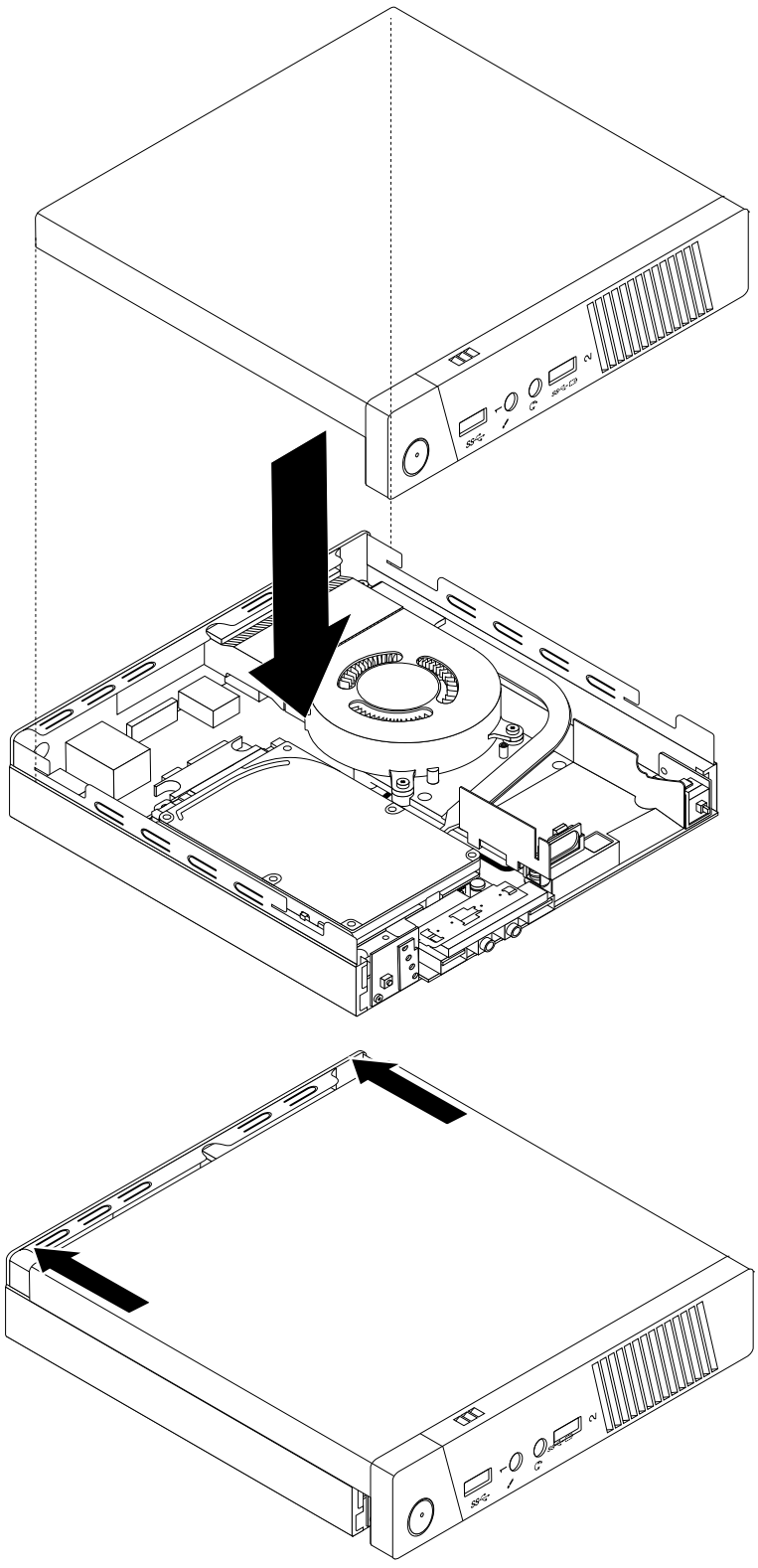

Figure 290. Installing the computer cover

4. Install the screw to secure the computer cover.

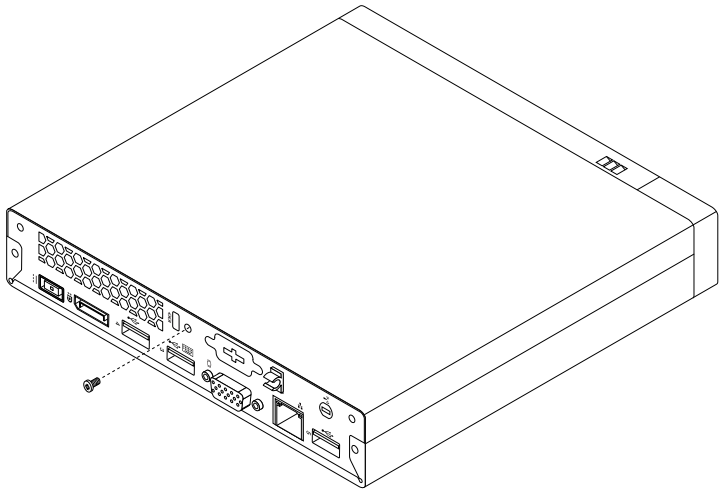

Figure 291. Installing the screw to secure the computer cover

5. Reconnect the external cables and power cords to the computer. See “Locating connectors on the rear of your computer” on page 87.
6. To update your configuration, refer to Chapter 5 “Using the Setup Utility program” on page 55.

Note: In most areas of the world, Lenovo requires the return of the defective Customer Replaceable Unit (CRU). Information about this will come with the CRU or will come a few days after the CRU arrives.

Obtaining device drivers

You can obtain device drivers for operating systems that are not preinstalled at http://www.lenovo.com/support. Installation instructions are provided in readme files with the device-driver files.

Chapter 11. Additional service information

This chapter provides additional information that the service representative might find helpful.

Security features

Security features in this section include the following:

- Passwords
- Vital Product Data
- Management Information Format (MIF)

Hardware controlled passwords

Hardware controlled passwords are set using the Setup Utility program. For more information about passwords, see “Using passwords” on page 55.

Operating system password

An operating system password is very similar to a power-on password and denies access to the computer by an unauthorized user when the password is activated. The computer is unusable until the password is entered and recognized by the computer.

Vital product data

Each computer has a unique Vital Product Data (VPD) code stored in the nonvolatile memory on the system board. After you replace the system board, the VPD must be updated. To update the VPD, see “Flash update procedures” on page 289.

BIOS levels

An incorrect level of BIOS can cause false errors and unnecessary FRU replacement. Use the following information to determine the current level of BIOS installed in the computer, the latest BIOS available for the computer, and where to obtain the latest level of BIOS.

- To determine the current Level of BIOS:
  - Start the Setup Utility.
  - Select Main menu.
- Sources for obtaining the latest level BIOS available
  1. Lenovo support web site: `http://www.lenovo.com/support/`
  2. Lenovo Customer Support Center
  3. Levels 1 and 2 Support

To update (flash) the BIOS, see “Flash update procedures” on page 289.

Note: BIOS settings vary by operating system. Change the BIOS settings before installing a new operating system. See “Changing the BIOS settings before installing a new operating system” on page 60.

Flash update procedures

This section details how to flash (update) the BIOS.

© Copyright Lenovo 2013, 2015

Updating the BIOS

When you install a new program, hardware device, or device driver, you might be informed to update the BIOS. You can update the BIOS from your operating system or a flash update disc (supported only on some models).

To update the BIOS, do the following:

1. Go to http://www.lenovo.com/drivers.
2. Download the flash BIOS update driver for the operating system version or the ISO image version (used to create a flash update disc). Then, download the installation instructions for the flash BIOS update driver you download.
3. Print the installation instructions you download and follow the instructions to update the BIOS.

Recovering from a POST/BIOS update failure

If the power to your computer is interrupted while the POST and BIOS is being updated, your computer might not restart correctly. If this happens, perform the following procedure to recover from the POST and BIOS update failure. This procedure is commonly called Boot-block Recovery.

1. Remove all media from the drives and turn off all attached devices and the computer. Then, disconnect all power cords from electrical outlets and disconnect all cables that are connected to the computer.
2. Open the computer cover. See “Removing the computer cover” on page 93.
3. Remove the hard disk drive. See “Replacing the primary hard disk drive” on page 126
4. Locate the Clear CMOS /Recovery jumper on the system board. See “Locating parts on the system board” on page 90.
5. Remove any cables that impede access to the Clear CMOS /Recovery jumper.
6. Move the jumper from the standard position (pin 1 and pin 2) to the maintenance position (pin 2 and pin 3).
7. Reconnect any cables that were disconnected and reinstall the PCI card if removed.
8. Close the computer cover and reconnect the power cords for the computer and monitor to electrical outlets. See “Completing the parts replacement” on page 156.
9. Turn on the computer and then insert the POST and BIOS update (flash update) disc into the optical drive. Wait a few minutes. Then, the recovery session begins. The recovery session will take two to three minutes. During this time, a warning message will be displayed and no action is needed from you.
10. After the recovery session is completed, there will be no video, and your computer will automatically turn off.
11. Repeat step 1 through step 5.
12. Move the Clear CMOS /Recovery jumper back to the standard position (pin 1 and pin 2).
13. Reconnect any cables that were disconnected and reinstall the PCI card if removed.
14. Close the computer cover and reconnect any cables that were disconnected.
15. Turn on the computer to restart the operating system.

Power management

Power management reduces the power consumption of certain components of the computer such as the system power supply, processor, hard disk drives, and some monitors.

Advanced configuration and power interface (ACPI) BIOS

Being an ACPI BIOS system, the operating system is allowed to control the power management features of the computer and the setting for Advanced Power Management (APM) BIOS mode is ignored. Not all operating systems support ACPI BIOS mode.

Automatic Power-on features

The Automatic Power-On features within the Power Management menu allow you to enable and disable features that turn on the computer automatically.

- **Wake Up on Alarm**: You can specify a date and time at which the computer will be turned on automatically. This can be either a single event or a daily event.
- **Wake on LAN**: If the computer has a properly configured token-ring or Ethernet LAN adapter card that is Wake on LAN-enabled and there is remote network management software, you can use the Wake on LAN feature. When you set Wake on LAN to **Enabled**, the computer will turn on when it receives a specific signal from another computer on the local area network (LAN).

To enable the Wake on LAN function or the Wake Up on Alarm function on the Windows 8 or Windows 8.1 operating system, do the following:

1. Open Control Panel.
2. Click **Hardware and Sound → Power Options**.
3. In the left panel, do one of the following:
   - For Windows 8: Click **Choose what the power buttons do**.
   - For Windows 8.1: Click **Choose what the power button does**.
4. In the **Shutdown setting** section, clear **Turn on fast startup**.

   Note: If the settings are unavailable, click **Change settings that are currently unavailable**.
5. Click **Save changes**.

Appendix A. Notices

Lenovo may not offer the products, services, or features discussed in this document in all countries. Consult your local Lenovo representative for information on the products and services currently available in your area. Any reference to a Lenovo product, program, or service is not intended to state or imply that only that Lenovo product, program, or service may be used. Any functionally equivalent product, program, or service that does not infringe any Lenovo intellectual property right may be used instead. However, it is the user's responsibility to evaluate and verify the operation of any other product, program, or service.

Lenovo may have patents or pending patent applications covering subject matter described in this document. The furnishing of this document does not give you any license to these patents. You can send license inquiries, in writing, to:

Lenovo (United States), Inc.
1009 Think Place - Building One
Morrisville, NC 27560
U.S.A.
Attention: Lenovo Director of Licensing

LENOVO PROVIDES THIS PUBLICATION “AS IS” WITHOUT WARRANTY OF ANY KIND, EITHER EXPRESS OR IMPLIED, INCLUDING, BUT NOT LIMITED TO, THE IMPLIED WARRANTIES OF NON-INFRINGEMENT, MERCHANTABILITY OR FITNESS FOR A PARTICULAR PURPOSE. Some jurisdictions do not allow disclaimer of express or implied warranties in certain transactions, therefore, this statement may not apply to you.

This information could include technical inaccuracies or typographical errors. Changes are periodically made to the information herein; these changes will be incorporated in new editions of the publication. Lenovo may make improvements and/or changes in the product(s) and/or the program(s) described in this publication at any time without notice.

The products described in this document are not intended for use in implantation or other life support applications where malfunction may result in injury or death to persons. The information contained in this document does not affect or change Lenovo product specifications or warranties. Nothing in this document shall operate as an express or implied license or indemnity under the intellectual property rights of Lenovo or third parties. All information contained in this document was obtained in specific environments and is presented as an illustration. The result obtained in other operating environments may vary.

Lenovo may use or distribute any of the information you supply in any way it believes appropriate without incurring any obligation to you.

Any references in this publication to non-Lenovo Web sites are provided for convenience only and do not in any manner serve as an endorsement of those Web sites. The materials at those Web sites are not part of the materials for this Lenovo product, and use of those Web sites is at your own risk.

Any performance data contained herein was determined in a controlled environment. Therefore, the result obtained in other operating environments may vary significantly. Some measurements may have been made on development-level systems and there is no guarantee that these measurements will be the same on generally available systems. Furthermore, some measurements may have been estimated through extrapolation. Actual results may vary. Users of this document should verify the applicable data for their specific environment.

© Copyright Lenovo 2013, 2015

Television output notice

The following notice applies to models that have the factory-installed television-output feature.

This product incorporates copyright protection technology that is protected by method claims of certain U.S. patents and other intellectual property rights owned by Macrovision Corporation and other rights owners. Use of this copyright protection technology must be authorized by Macrovision Corporation, and is intended for home and other limited viewing uses only unless otherwise authorized by Macrovision Corporation. Reverse engineering or disassembly is prohibited.

European conformance CE mark

CE

Trademarks

The following terms are trademarks of Lenovo in the United States, other countries, or both:

Lenovo
The Lenovo logo
Rescue and Recovery
ThinkCentre
ThinkVantage

Microsoft, Windows, and Windows Media are trademarks of the Microsoft group of companies.

DisplayPort and VESA are **T**rademarks of the Video Electronics Standards Association.

Other company, product, or service names may be trademarks or service marks of others.

Index

A

ac power adapter bracket, installing or moving 244
ac power adapter, replacing 238
accessing
  system board components and drives 161
administrator, password 56
audio line-in connector 69, 79
audio line-out connector 69, 79

B

basic troubleshooting 35
battery, replacing 110, 179, 263
BIOS settings, changing 60
boot-block recovery 290

C

card reader assembly, installing 169
card reader assembly, replacing 171
card reader, replacing 102, 105
changing
  password 56
  startup device sequence 58
cleaning an optical mouse 42
CMOS, clearing 56
components, internal 70, 80, 88
computer cover
  removing 93, 159, 237
computer cover, reinstalling 156, 234, 286
connector 69, 79, 88
connectors
  rear 67, 77, 87
connectors, controls, indicators
  front 67, 77, 86
considerations, passwords 56
cover presence switch, intrusion switch, replacing 274
cover presence switch, replacing 142, 200
CRU
  completing the installation 156, 234, 286
CRUs (Customer Replacable Units), returning
 defective 70, 80, 88

D

deleting a password 56
Description 69, 79, 88
device drivers 157, 236, 288
diagnostic program 52
diagnostics, troubleshooting 35
DisplayPort connector 69, 79, 88
drivers, device 157, 236, 288
drives
  bays 76, 85
  specifications 76, 85

E

environment, operating 27–29
Ethernet connector 70, 79, 88
exiting, Setup Utility 60
external options, installing 159, 238

F

failure, recovering from POST/BIOS 290
front
  connectors, controls, indicators 67, 77, 86
front audio and USB assembly, replacing 135, 215
front bezel
  front bezel, removing 94, 160
front bezel, reinstalling 94, 160
front fan assembly, replacing 131, 213
front USB assembly, installing 106
front USB assembly, replacing 109, 176
front Wi-Fi antenna, installing or removing 268
front Wi-Fi antenna, installing, removing 153, 230
FRU locations 70, 80, 88
FRU part numbers v, 67, 72, 82, 90, 159, 237
FRUs, replacing 93

H

hard disk drive assembly, replacing 251
hard disk drive, replacing 202
heat sink and fan assembly, replacing 191
heat sink assembly, replacing 113

I

I/O box, installing, removing 259
Identifying FRUs 70, 80, 88
installing 174
  mSATA solid-state drive 120, 180
  operating system 60
  solid-state drive 130, 211
installing options
  memory module 164, 262
  PCI card 95, 162
installing or removing
  vertical stand 240
  VESA mount bracket 242
installing or replacing
  secondary hard disk drive 204
installing, replacing
  memory module 98
internal speaker, replacing 138, 217, 271

© Copyright Lenovo 2013, 2015

K

keyboard connector 70, 80
keyboard, replacing 155, 233, 285

L

Lenovo Solution Center 52
locating components 70, 80, 88
looking up part numbers v, 67, 72, 82, 90, 159, 237

M

memory module 98
  installing, replacing 98, 164, 262
  system board 164, 262
Microphone connector 70, 80
microprocessor
  replacing 194, 280
mouse connector 70, 80
mouse, replacing 155, 233, 285
mSATA solid-state drive, installing 120, 180
mSATA solid-state drive, replacing 122, 182

N

notice, television output 294
notices 293

O

optical drive, replacing 100, 166, 246
optical mouse
  cleaning 42
Optional port 88
Optional-service CRUs 70, 80, 88

P

part numbers v, 67, 72, 82, 90, 159, 237
parts replacement, completing 156, 234, 286
password
  administrator 56
  considerations 56
  power-on password 56
  setting, changing, deleting 56
passwords
  erasing 56
  lost or forgotten 56
passwords, using 55
PCI card 95, 162
  installing, replacing 95, 162
  slots 95, 162
physical specifications 27
power supply assembly, replacing 186
power supply, replacing 112
power switch board, replacing 265
power switch unit, replacing 189
power-on, password 56
primary hard disk drive, replacing 126

R

rear connectors 67, 77, 87
rear fan assembly, replacing 133
rear Wi-Fi antenna, installing or removing 270
rear Wi-Fi antenna, installing, removing 152, 227
recovering
  from a POST/BIOS update failure 290
recovery
  boot-block 290
removing computer cover 93, 159, 237
replacing
  battery 110, 179, 263
  card reader 102, 105
  card reader assembly 171
  cover presence switch 274
  front USB assembly 109, 176
  hard disk drive 202
  hard disk drive assembly 251
  heat sink and fan assembly 191
  heat sink assembly 113
  microprocessor 194, 280
  mSATA solid-state drive 122, 182
  power supply 112
  power switch board 265
  primary hard disk drive 126
  secondary hard disk drive 208
  system board 117, 196, 282
  thermal module 278

S

secondary hard disk drive, installing or replacing 204
secondary hard disk drive, replacing 208, 253
security
  enabling or disabling 57
selecting
  startup device 57
  temporary startup device 57
Self-service CRUs 70, 80, 88
serial port 70, 80
setting
  password 56
settings
  changing 55
  viewing 55
Setup Utility 55
Setup Utility program, starting 55
Setup Utility, exiting 60
solid-state drive, installing 130, 211
starting the Setup Utility program 55
startup device 57
  sequence, changing 58
  temporary, selecting 57
support web site
  support 32
support, web site 32
system board
  connectors 73–74, 83–84, 91
  locating parts 73, 83, 91
  locations 73–74, 83–84, 91

memory module 164, 262
replacing 117, 196, 282
system board components and drives
accessing 161
system fan, replacing 276

T

television output notice 294
temporary startup device 57
thermal module, replacing 278
thermal sensor, replacing 140, 219
trademarks 294
troubleshooting, basic 35
troubleshooting, diagnostics 35

U

USB 3.0 connector 88
USB connector 70, 80
using
passwords 55
Setup Utility 55

V

vertical stand
installing or removing 240
VESA mount bracket, installing or removing 242
VGA monitor connector 70, 80, 88
viewing and changing settings 55

W

Wi-Fi card module, replacing 266
Wi-Fi units, Wi-Fi adapter card, Wi-Fi card module, Wi-Fi antenna cable, replacing 144, 221

© Copyright Lenovo 2013, 2015

