User Guide

IP Link® Products

IPCP 505

IP Link Control Processor

Extron Electronics
INTERFACING, SWITCHING AND CONTROL

68-2026-01 Rev. B
07 13

Safety Instructions

Safety Instructions • English

WARNING: This symbol, ⚠, when used on the product, is intended to alert the user of the presence of uninsulated dangerous voltage within the product's enclosure that may present a risk of electric shock.

ATTENTION: This symbol, ⚠, when used on the product, is intended to alert the user of important operating and maintenance (servicing) instructions in the literature provided with the equipment.

For information on safety guidelines, regulatory compliances, EMI/EMF compatibility, accessibility, and related topics, see the Extron Safety and Regulatory Compliance Guide, part number 68-290-01, on the Extron website, **www.extron.com**.

Instructions de sécurité • Français

AVERTISSEMENT: Ce pictogramme, ⚠, lorsqu'il est utilisé sur le produit, signale à l'utilisateur la présence à l'intérieur du boîtier du produit d'une tension électrique dangereuse susceptible de provoquer un choc électrique.

ATTENTION: Ce pictogramme, ⚠, lorsqu'il est utilisé sur le produit, signale à l'utilisateur des instructions d'utilisation ou de maintenance importantes qui se trouvent dans la documentation fournie avec le matériel.

Pour en savoir plus sur les règles de sécurité, la conformité à la réglementation, la compatibilité EMI/EMF, l'accessibilité, et autres sujets connexes, lisez les informations de sécurité et de conformité Extron, réf. 68-290-01, sur le site Extron, **www.extron.fr**.

Sicherheitsanweisungen • Deutsch

WARNUNG: Dieses Symbol ⚠ auf dem Produkt soll den Benutzer darauf aufmerksam machen, dass im Inneren des Gehäuses dieses Produktes gefährliche Spannungen herrschen, die nicht isoliert sind und die einen elektrischen Schlag verursachen können.

VORSICHT: Dieses Symbol ⚠ auf dem Produkt soll dem Benutzer in der im Lieferumfang enthaltenen Dokumentation besonders wichtige Hinweise zur Bedienung und Wartung (Instandhaltung) geben.

Weitere Informationen über die Sicherheitsrichtlinien, Produkthandhabung, EMI/EMF-Kompatibilität, Zugänglichkeit und verwandte Themen finden Sie in den Extron-Richtlinien für Sicherheit und Handhabung (Artikelnummer 68-290-01) auf der Extron-Website, **www.extron.de**.

Instrucciones de seguridad • Español

ADVERTENCIA: Este símbolo, ⚠, cuando se utiliza en el producto, avisa al usuario de la presencia de voltaje peligroso sin aislar dentro del producto, lo que puede representar un riesgo de descarga eléctrica.

ATENCIÓN: Este símbolo, ⚠, cuando se utiliza en el producto, avisa al usuario de la presencia de importantes instrucciones de uso y mantenimiento recogidas en la documentación proporcionada con el equipo.

Para obtener información sobre directrices de seguridad, cumplimiento de normativas, compatibilidad electromagnética, accesibilidad y temas relacionados, consulte la Guía de cumplimiento de normativas y seguridad de Extron, referencia 68-290-01, en el sitio Web de Extron, **www.extron.es**.

Chinese Simplified（简体中文）

警告: ⚠产品上的这个标志意在警告用户该产品机壳内有暴露的危险电压，有触电危险。

注意: ⚠产品上的这个标志意在提示用户设备随附的用户手册中有重要的操作和维护(维修) 说明。

关于我们产品的安全指南、遵循的规范、EMI/EMF 的兼容性、无障碍使用的特性等相关内容，敬请访问 Extron 网站 **www.extron.cn**，参见 Extron 安全规范指南，产品编号 68-290-01。

Chinese Traditional（繁體中文）

警告: ⚠若產品上使用此符號，是為了提醒使用者，產品機殼內存在著可能會導致觸電之風險的未絕緣危險電壓。

注意 ⚠ 若產品上使用此符號，是為了提醒使用者。

有關安全性指導方針、法規遵守、EMI/EMF 相容性、存取範圍和相關主題的詳細資訊，請瀏覽 Extron 網站：**www.extron.cn**，然後參閱《Extron 安全性與法規遵守手冊》，準則編號 68-290-01。

Japanese

警告: この記号 ⚠ が製品上に表示されている場合は、筐体内に絶縁されていない高電圧が流れ、感電の危険があることを示しています。

注意: この記号 ⚠ が製品上に表示されている場合は、本機の取扱説明書に記載されている重要な操作と保守(整備)の指示についてユーザーの**注意**を喚起するものです。

安全上のご注意、法規厳守、EMI/EMF適合性、その他の関連項目については、エクストロンのウェブサイト**www.extron.jp**より『Extron Safety and Regulatory Compliance Guide』(P/N 68-290-01) をご覧ください。

Korean

경고: 이 기호 ⚠, 가 제품에 사용될 경우, 제품의 인클로저 내에 있는 접지되지 않은 위험한 전류로 인해 사용자가 감전될 위험이 있음을 경고합니다.

주의: 이 기호 ⚠, 가 제품에 사용될 경우, 장비와 함께 제공된 책자에 나와 있는 주요 운영 및 유지보수(정비) 지침을 경고합니다.

안전 가이드라인, 규제 준수, EMI/EMF 호환성, 접근성, 그리고 관련 항목에 대한 자세한 내용은 Extron 웹 사이트(**www.extron.co.kr**)의 Extron 안전 및 규제 준수 안내서, 68-290-01 조항을 참조하십시오.

FCC Class A Notice

This equipment has been tested and found to comply with the limits for a Class A digital device, pursuant to part 15 of the FCC rules. The Class A limits provide reasonable protection against harmful interference when the equipment is operated in a commercial environment. This equipment generates, uses, and can radiate radio frequency energy and, if not installed and used in accordance with the instruction manual, may cause harmful interference to radio communications. Operation of this equipment in a residential area is likely to cause interference; the user must correct the interference at his own expense.

NOTE: For more information on safety guidelines, regulatory compliances, EMI/EMF compatibility, accessibility, and related topics, see the ***Extron Safety and Regulatory Compliance Guide*** on the Extron website.

Copyright
© 2013 Extron Electronics. All rights reserved.

Trademarks
All trademarks mentioned in this guide are the properties of their respective owners.

The following registered trademarks(®), registered service marks(SM), and trademarks(TM) are the property of RGB Systems, Inc. or Extron Electronics:

Registered Trademarks (®)
AVTrac, Cable Cubby, CrossPoint, eBUS, EDID Manager, EDID Minder, Extron, Flat Field, GlobalViewer, Hideaway, Inline, IP Intercom, IP Link, Key Minder, LockIt, MediaLink, PlenumVault, PoleVault, PowerCage, PURE3, Quantum, SoundField, SpeedMount, SpeedSwitch, System Integrator, TeamWork, TouchLink, V-Lock, VersaTools, VN-Matrix, VoiceLift, WallVault, WindoWall, XTP, XTP Systems
Registered Service Mark(SM) : S3 Service Support Solutions
Trademarks (TM)
AAP, AFL (Accu-Rate Frame Lock), ADSP (Advanced Digital Sync Processing), AIS (Advanced Instruction Set), Auto-Image, CDRS (Class D Ripple Suppression), DDSP (Digital Display Sync Processing), DMI (Dynamic Motion Interpolation), Driver Configurator, DSP Configurator, DSVP (Digital Sync Validation Processing), FastBite, FOXBOX, IP Intercom HelpDesk, MAAP, MicroDigital, ProDSP, QS-FPC (QuickSwitch Front Panel Controller), Scope-Trigger, SIS, Simple Instruction Set, Skew-Free, SpeedNav, Triple-Action Switching, XTRA, ZipCaddy, ZipClip

Conventions Used in this Guide

Notifications

The following notifications are used in this guide:

WARNING: A warning indicates a situation that has the **potential** to result in death or severe injury.

CAUTION: A caution indicates a situation that **may** result in minor injury.

ATTENTION: Attention indicates a situation that may damage or destroy the product or associated equipment.

NOTE: A note draws attention to important information.

TIP: A tip provides a suggestion to make working with the application easier.

Software Commands

Commands are written in the fonts shown here:

```
^AR Merge Scene,,Op1 scene 1,1 ^B 51 ^W^C
[Ø1] RØØØ4 ØØ3ØØ ØØ4ØØ ØØ8ØØ ØØ6ØØ [Ø2] 35 [17] [Ø3]
```

Esc X1 * X17 * X20 * X23 * X21 CE ←

NOTE: For commands and examples of computer or device responses mentioned in this guide, the character "Ø" is used for the number zero and "O" is the capital letter "o."

Computer responses and directory paths that do not have variables are written in the font shown here:

```
Reply from 2Ø8.132.18Ø.48: bytes=32 times=2ms TTL=32
C:\Program Files\Extron
```

Variables are written in slanted form as shown here:

ping *xxx.xxx.xxx.xxx* –t

SOH R *Data* STX *Command* ETB ETX

Selectable items, such as menu names, menu options, buttons, tabs, and field names are written in the font shown here:

From the **File** menu, select **New**.

Click the **OK** button.

Specifications Availability

Product specifications are available on the Extron website, **www.extron.com**.

Contents

Introduction 1

Before You Begin 1
About the IPCP 505 1
Features 1
Controlling Other Devices 2
Application Diagrams 3
IR and RS-232 Device Control 4
How the IPCP 505 Works: Components and Interactions 5
Creating a Control System Using the IPCP with Optional Extron TouchLink Touchpanels 5
System Requirements 6
Hardware Requirements 6
Software Requirements 6

Hardware Features and Installation 7

Setup Checklist: How to Proceed With Installation 7
Prepare 7
Perform Physical Installation 7
Configure the IPCP 7
Front Panel Features 9
IR Learning Sensor 9
Reset Features 9
Mounting the IPCP 505 10
UL Rack Mounting Guidelines 10
Rear Panel Features and Connections 11
Power Connections 11
Bidirectional Control and Communication Connections and Features 12
Unidirectional Control and Communication Connections 14
Additional Control Ports 15
Resetting the Unit 16

Software-based Configuration and Control 18

Configuration and Control: an Overview 18
Basic Setup Steps: a Guide to this Section and Other Resources 19
Communicating with the IPCP 19
Configuring the IPCP for Network Communication 19
Configuring the IPCP for Network Use Via Global Configurator 20
Configuring the IPCP for Network Use Via the ARP Command 20
Configuring the IPCP for Network Use Via a Web Browser 22
Configuring the IPCP for Network Use Via SIS Commands and Telnet 23
Setting up the PC for IP Communication With an IPCP 505 23
Global Configurator Software for Windows® 27
Downloading the Software and Getting Started 27
PC System Requirements 27
Using Global Configurator: Helpful Tips 28
Advanced Configuration 29
IR Learning to Create Customized IR Driver Files 29
Printing a Wiring Block Diagram or a GUI Configuration Report 30
Updating Firmware 30
Advanced Serial Port Control 31
Saving and Uploading the Configuration 36
Controlling an IPCP 505 36
Embedded Web Pages 36
GlobalViewer Web Pages 44
Controlling the IPCP 505 with a Touchpanel 47
Customizing the IPCP Control Web Pages 48
Troubleshooting 49
Power Connections 49
Data Connections 49
Device Control Connections and Configuration 49

SIS Programming and Control 50
Host-to-IPCP Communications 50
IPCP 505-initiated Messages 50
Password Information 51
Error Responses 51
Error Response References 51
Commands and Responses 51
Using the Command/Response Tables 51
Entering SIS Commands: Helpful Tips 52
Symbol Definitions 53
Command/Response Table for SIS Commands 57

Reference Information 75
Glossary 75
File Types: a Key to Extron-specific File Names ... 77

Firmware Updates 78
Determining the Firmware Version 78
Using the Global Configurator Software 78
Using a Web Browser 78
Updating the Main Firmware 81
Locating and Downloading the Firmware 81
Updating Firmware via Extron IP Link File Manager Software 82
Updating Firmware via the IPCP Embedded Web Page 83
Updating Firmware via Extron Firmware Loader Software 85

Index 86

Introduction

This section covers the following basic information you should know about this guide and the product before installation:

- **Before You Begin** — What this guide covers and does not cover, and what terms are used to refer to this product
- **About the IPCP 505** — An overview of the product and its features
- **Application Diagrams** — Example application diagrams
- **IR and RS-232 Device Control** — General information about IR and RS-232 control of other products
- **How the IPCP 505 Works: Components and Interactions** — A conceptual explanation of how it works
- **Creating a Control System Using the IPCP with Optional Extron TouchLink Touchpanels** — A brief overview about using the IPCP with touchpanels
- **System Requirements** — Computer and network system requirements for setting up an IPCP

Before You Begin

This guide provides detailed information and best practices recommendations about cabling and configuring the Extron IPCP 505 IP Link Control Processor and reference information about controller specifications, programming, and applications.

It does not contain instructions on the most basic setup steps: those are covered in the *Global Configurator Help* file, which describes how to use the Global Configurator (GC) program to download drivers, add AV devices to a GC configuration, configure functions, set a shutdown schedule, and set up e-mail alerts to flag a projector disconnection or warn that lamp usage hours have been exceeded.

Throughout this guide the IPCP 505 is also referred to as the “IPCP,” “control processor,” or “controller.” Global Configurator software is also referred to as “GC,” and the GlobalViewer application is sometimes referred to as “GV.”

About the IPCP 505

The IPCP 505 is capable of controlling and monitoring a projector or other display device, source devices, switchers, and various other items such as lights, a projector lift, or a screen motor. It can used in a distributed control system environment or as a stand-alone controller. It allows legacy products to be linked to and controlled via a network. The IPCP also has the ability to power devices that accept 12 VDC.

Features

General features

Flexible options for device control — The IPCP offers RS-232 and IR-based control, relays, and flexible I/O (analog input or digital input or digital output) controls.

Rack mountability — The 1U high, half rack wide enclosure is easily rack mounted.

Universal power system compatibility — The IPCP includes an internal power supply that accepts 100-240 VAC, 50-60 Hz input.

Network and configuration features

The IPCP 505 can be configured and controlled using a host computer via IP Link Ethernet control. Setup and control can be accomplished by simple ASCII commands (Simple Instruction Set, SIS™) or via the free Global Configurator (GC) program. The GC software offers many more setup options than does SIS programming. After being configured, the IPCP can be controlled by a TouchLink touchpanel connected to the same network.

The IPCP 505 integrates seamlessly with Extron GlobalViewer Enterprise (GVE) software and the free GlobalViewer web-based AV resource management and remote control application. The IPCP supports multiple TouchLink touchpanels over a standard Ethernet network. Global Configurator and other useful software applications are available at **www.extron.com**.

Via Ethernet/IP communication you can access the embedded web pages of the IPCP 505, which include online diagnostics and monitoring of basic control features. As an integrated part of the IPCP 505, IP Link provides the following advantages:

- **Global compatibility** — The IPCP uses standard Ethernet communication protocols, including ARP, DHCP, ICMP (ping), TCP, IP, Telnet, HTTP, and SMTP.
- **Embedded web page serving** — The IPCP 505 offers up to 975 MB of flash memory for storing Extron GlobalViewer and user-supplied web pages, configuration settings, and device drivers. Data in flash memory is served at a transfer rate of 6 Mbps (megabits per second).
- **Remote equipment management** — The IP Link connection allows you to remotely manage, monitor, and control up to eight Ethernet-enabled products such as projectors, cameras, video conferencing equipment, switchers, and other AV equipment. The IPCP provides support for the following:
  - TCP connections only
  - Password-protected TCP connections
  - Up to eight Ethernet drivers at a time
  - Connection via IP address or host name
  - A range of Telnet ports, when supported by the target device
- **Multi-user support** — Up to two hundred (200) simultaneous connections enable each IP Link device to support many concurrent users and improve system throughput by sending information in parallel.
- **Built-in multilevel security** — The user controls access to the devices attached to the controller. Two levels of password protection (administrator and user) provide appropriate security.
- **Management ability via Global Configurator** — The included software and the GlobalViewer web pages associated with it allow you to control, monitor, and schedule various functions of devices connected to IP Link products such as the IPCP.
- **E-mail notification** — The IPCP can be set up to send e-mail notifications, such as a notice that a projector has been disconnected or the projector lamp has been used for a designated number of hours.

Controlling Other Devices

The IPCP 505 offers RS-232, infrared (IR), TCP/Ethernet control and monitoring, relay device control, and control via flexible input/output (flex I/O) ports. It can learn IR signals from remote controls to communicate with sources such as VCRs and DVD players. Users can create their own device drivers (IR) or go to the Extron website (**www.extron.com**) to obtain device drivers.

The IPCP also provides four independently switched 12 VDC outputs, and can control up to eight Ethernet-enabled AV devices.

Application Diagrams

The following figures show examples of types of devices that can be connected to some of the ports on the IPCP 505.

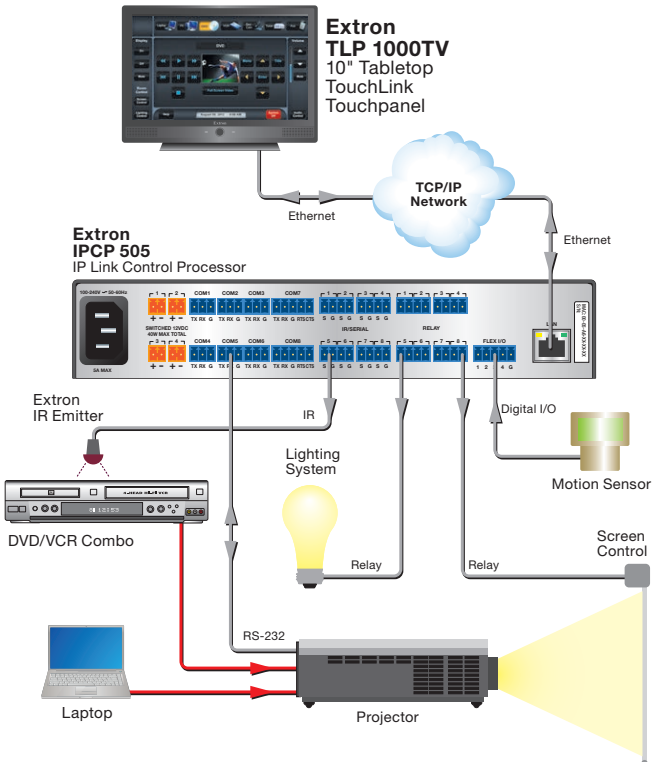

Figure 1. **An Example Application**

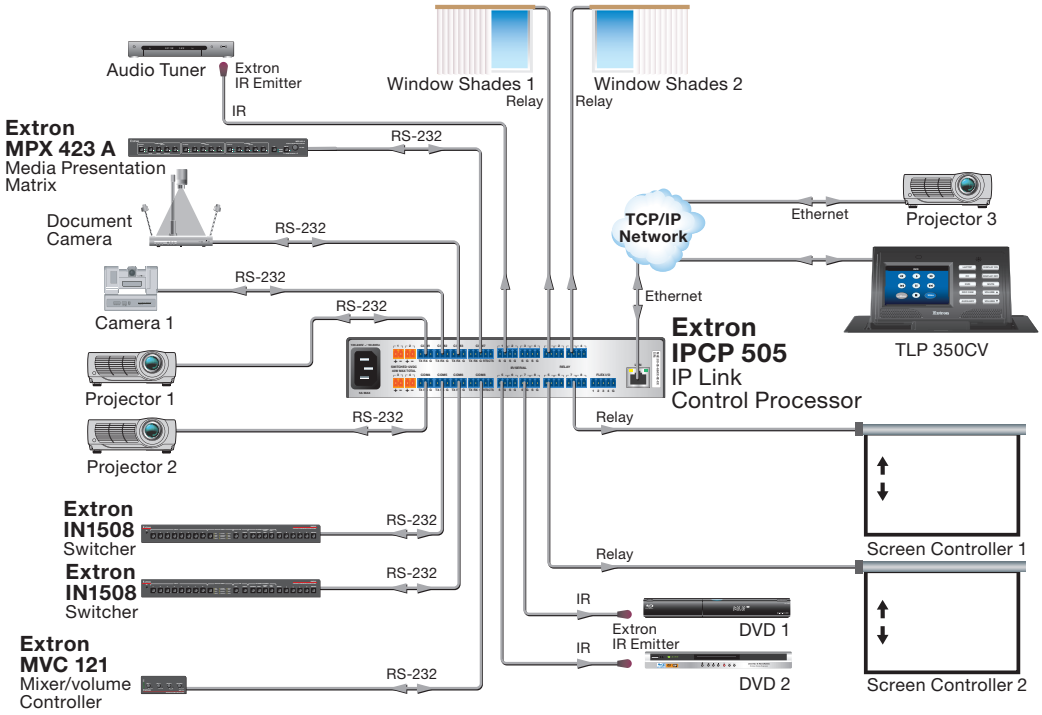

Figure 2. **A Typical IPCP 505 Application**

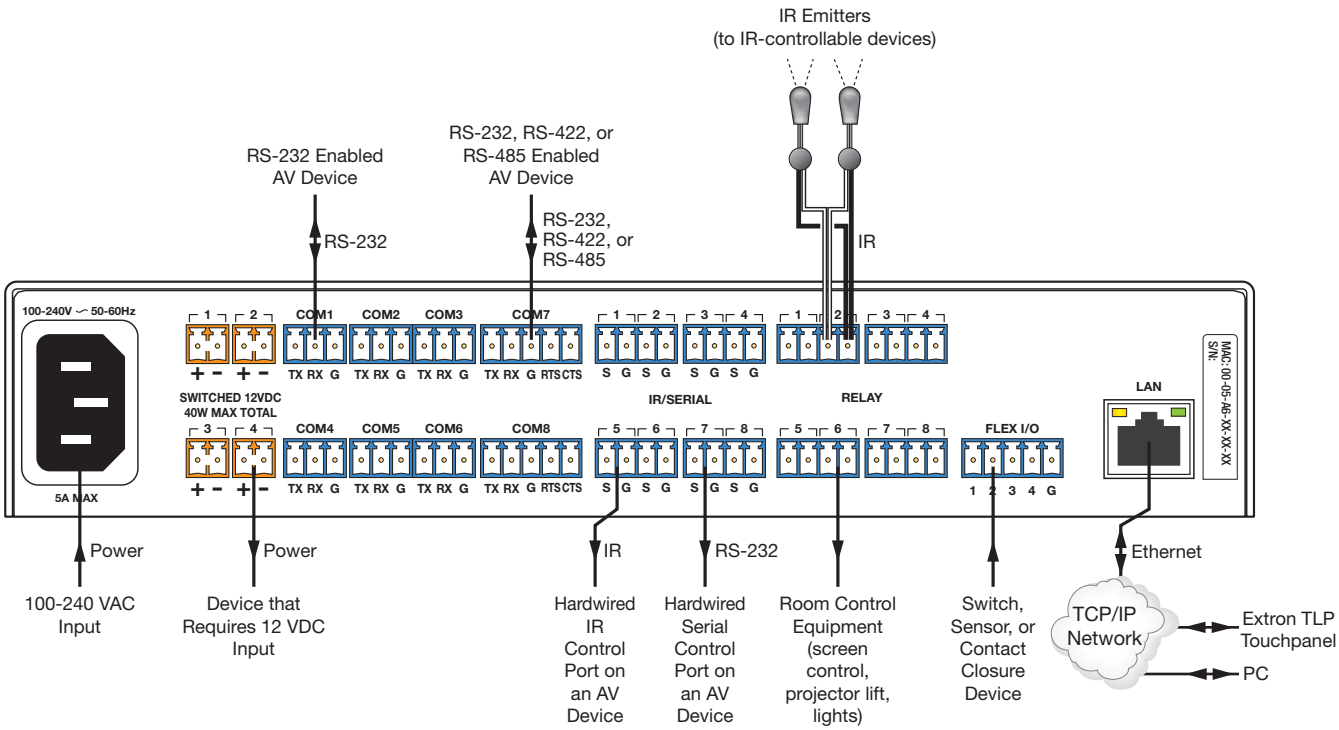

Figure 3. **Signal Flow and Generic Connection Types**

IR and RS-232 Device Control

The IPCP must be configured in one of the following ways before it will send commands to a projector, display, or source device:

- An IR or an RS-232 driver file can be installed from a disk, downloaded from the Extron website (**www.extron.com**), or downloaded from the extensive Extron driver library using the driver subscription feature within Global Configurator. The driver is saved to a folder and uploaded to the IPCP via Global Configurator.
- RS-232 command strings can be entered directly from a host computer using Global Configurator.
- IR commands can be entered directly from an IR remote control through IR learning and the Extron IR Learner software to create a driver that the IPCP can use. IR learning is seldom needed, but it is convenient for installing new or updated commands into the IPCP 505 in the field in the rare cases when a driver is not already available from Extron.

See the *Global Configurator Help* file or the *IR Learner Help* file (which comes with the software) for details on setting up the IPCP and for downloading, programming, or learning device control commands.

How the IPCP 505 Works: Components and Interactions

The IPCP 505 requires and uses event files to perform functions. The event files define, monitor, and govern how an IPCP 505 works. The following diagram is an example of how the IPCP interacts with accessories, event scripts, drivers, ports, input devices, and output devices.

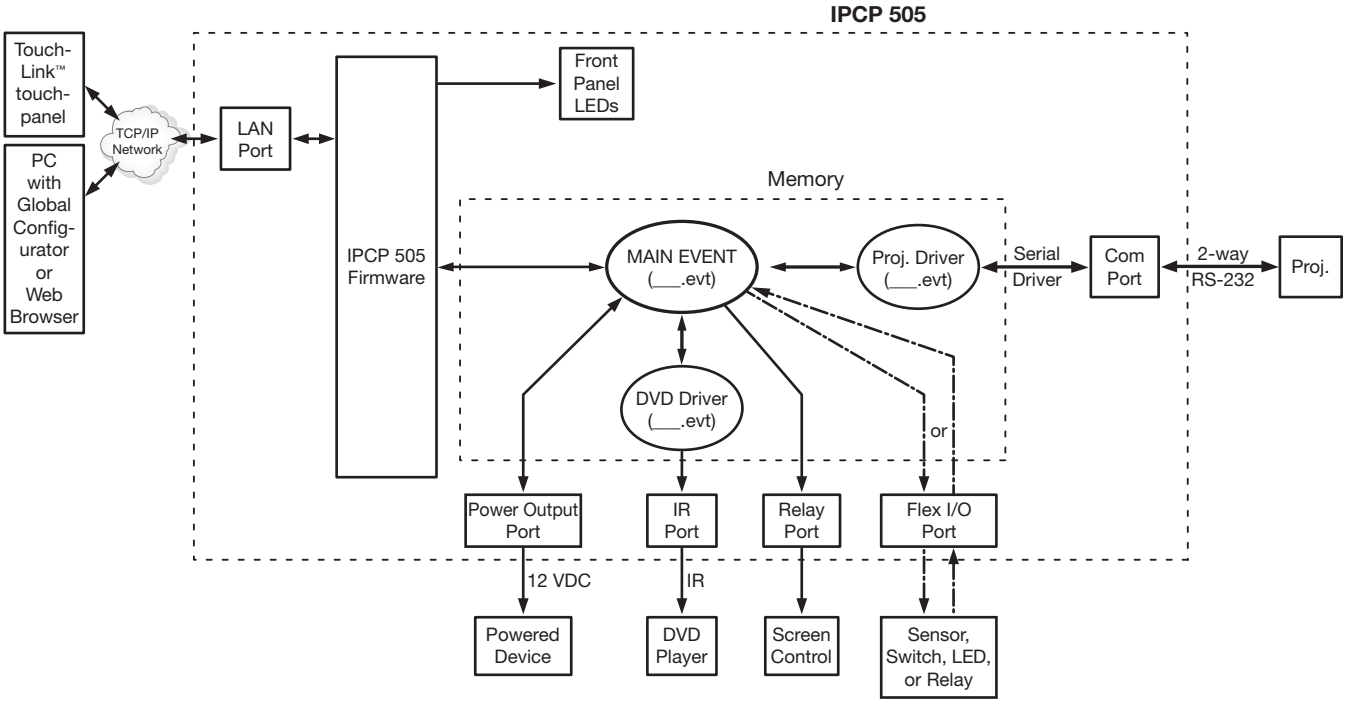

Figure 4. **How the IPCP 505 Works**

The IPCP can be configured completely via Global Configurator software. Once you have set up how you want it to work (assigned drivers to ports, configured relays and contact closure input, and set up IP addresses and functions), that information is saved to a project file that is uploaded into the IPCP.

The configuration information is used to create the “main event” (0.evt) script file that defines the operation of the IPCP. The main event file also controls and monitors ports and optional control accessories. Scripts are compiled to generate the main event file to monitor events and to generate actions (such as issuing commands and triggering relays).

Creating a Control System Using the IPCP with Optional Extron TouchLink Touchpanels

Not only can the IPCP 505 act as a stand-alone controller that can be accessed via its internal and GlobalViewer web pages, but it also can act as the centerpiece of a control system that features Extron TouchLink Touchpanels. The touchpanels provide a convenient, aesthetically pleasing interface for controlling the IPCP, which, in turn, controls the other system components.

If you have additional questions or require support for your Extron control system installation, contact the **Extron S3 Control Systems Support Hotline**.

System Requirements

The IPCP 505, Global Configurator, and GUI Configurator have the following minimum hardware and software requirements:

Hardware Requirements

	Global Configurator	GUI Configurator
Processor	Intel® Pentium® III, 1 GHz	Intel Pentium 4 or AMD™ Athlon™
RAM	512 MB	1 GB (2 GB is recommended for multiple or large projects)
Available hard disk space	50 MB	100 MB
Screen resolution		1024x768
A network connection with a minimum data transfer rate of 10 Mbps (100 Mbps is recommended)		

Software Requirements

	Global Configurator and GlobalViewer	GUI Configurator
Operating system	• Microsoft® Windows® XP, service pack 2 • Windows Vista® or • Windows 7	• Microsoft Windows XP, service pack 3 • Windows Vista or • Windows 7
	ATTENTION: Do not run Global Configurator software on a PC that uses an earlier version of Windows.	
Microsoft Windows Script	version 5.6	
Microsoft .NET framework		version 4.0 or higher
Browser	Microsoft Internet Explorer® version 6.0 or higher with ActiveX® enabled	

NOTE: GUI Configurator is used to set up any Extron TouchLink touchpanel that will be used with the IPCP.

Hardware Features and Installation

This section covers the following material:

- **Setup Checklist: How to Proceed With Installation** — A checklist of tasks to guide you through installation
- **Front Panel Features** — Locations and some descriptions of items on the front panel
- **Mounting the IPCP 505** — Brief guidelines for mounting
- **Rear Panel Features and Connections** — Locations, descriptions, and cabling notes for rear panel features and corresponding front panel indications
- **Resetting the Unit** — Information about the available reset modes and how to reset the IPCP

Setup Checklist: How to Proceed With Installation

Prepare

- ☐ Familiarize yourself with the features of the IPCP 505.
- ☐ Install the latest version of the Extron Global Configurator (GC) software (version 3.2 or higher), the latest driver package, and any additional software such as GUI Configurator, GlobalViewer Enterprise (GVE) or IR Learner (available from **www.extron.com** or the *Extron Software Products* disc).
- ☐ Obtain IP setting information from the network administrator for the IPCP.
- ☐ Obtain model names and setup information for devices that the IPCP will control.

Perform Physical Installation

- ☐ **Mount** the unit to a rack or projector mount (see the instructions on page 10).
- ☐ Connect the IPCP 505 to a network (LAN) and connect other devices to the IPCP (see **Rear Panel Features and Connections starting on page 11** or see the "Setup" section of the *IPCP 505 Setup Guide*).
- ☐ Connect power cords and turn on the output devices (projectors, monitors, speakers), the IPCP, a PC (for setup) or touchpanel (for control after configuration), and input devices (DSS, cable boxes, and the like).

Configure the IPCP

- ☐ **Connect** the PC and the IPCP 505 to the same Ethernet network (see page 13) and use Telnet, Extron DataViewer, or a similar application to configure the IPCP for network communication.
- ☐ Connect any Extron TLP touchpanels that will be part of the system to the same network as the PC and IPCP. Create a user interface layout for the touchpanels and upload the GUI configuration to each touchpanel. See the *GUI Configurator Help* file for instructions.

- ☐ Create a new GC project and configure the IPCP 505. See the *Global Configurator Help* file.
  - ☐ Set the IP address and subnet mask for the IPCP, and other IP settings.
  - ☐ Define the GlobalViewer Tree location of the unit.
  - ☐ Add the IPCP to the project.
  - ☐ Define e-mail settings and contacts.
  - ☐ Add serial, IR, and Ethernet device drivers.
  - ☐ Configure the ports on the IPCP and assign device drivers as needed.
  - ☐ Configure touchpanel buttons, if applicable, in Global Configurator.
  - ☐ Create a display shutdown schedule.
  - ☐ If a projector is part of the system and if desired, create a display lamp hours notification e-mail.
  - ☐ Create a display disconnection notification e-mail.
  - ☐ Perform configurations for special applications, if needed.
  - ☐ Save the Global Configurator project/configuration.
  - ☐ Build and upload the configuration.
- ☐ Test the system.

Front Panel Features

Front panel features are shown below. Most of the features and LED indications are described and shown in the “Rear Panel Features and Connections” section paired with the descriptions of the corresponding rear panel ports.

> **NOTE:** The IPCP 505 must be set up in order to function. See the **Software-based Configuration and Control** section starting on page 18 and the *Global Configurator Help* file for information about Global Configurator, which you must use to set up the unit.

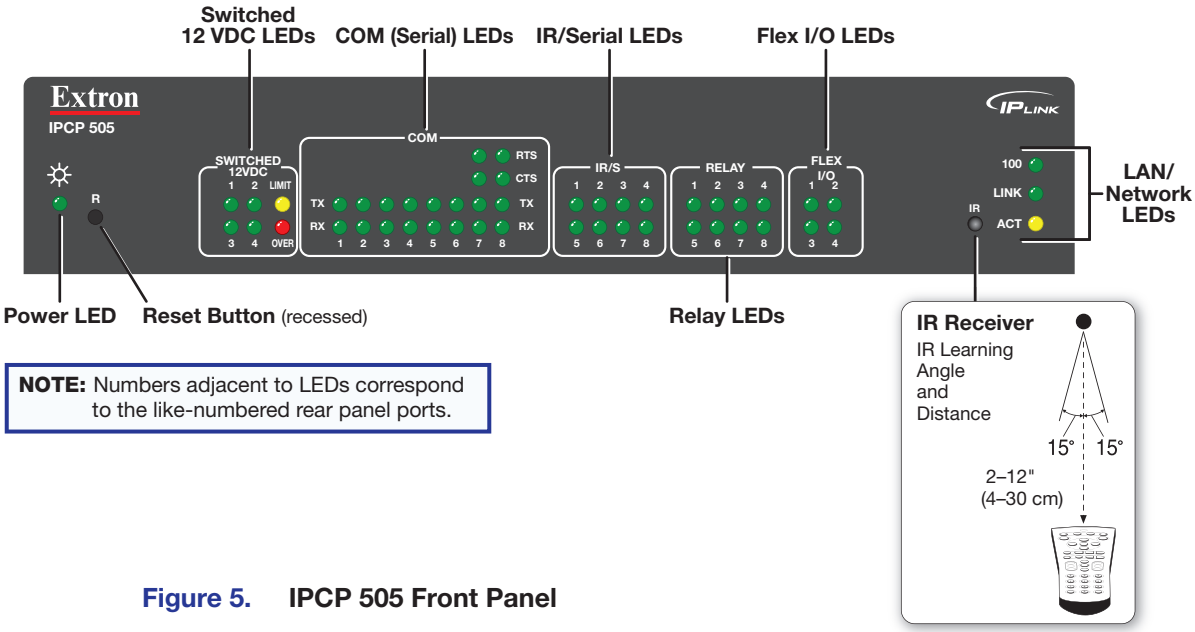

> **NOTE:** Numbers adjacent to LEDs correspond to the like-numbered rear panel ports.

Figure 5. **IPCP 505 Front Panel**

IR Learning Sensor

In most cases, Extron has already produced a driver file for controlling the projector, display, or source device you plan to use. If a device driver file is not available, you can create your own using Extron IR Learner software, the remote control of the projector or display, and the IR learning receiver sensor on the IPCP, shown the figure above.

This receiver accepts infrared signals of from 30 kHz to 1 MHz. The IR remote control must be pointed directly at the receiver for best results. The front panel diagram indicates the best distances and angles at which to hold the remote control.

Reset Features

Reset button and LED — Pressing this recessed button causes various IP functions and Ethernet connection settings to be reset to the factory defaults. The green LED flashes depending on the selected reset mode (see **Resetting the Unit** and the reset modes table on page 16 for details).

Mounting the IPCP 505

Optional rack shelves are available for use with the IPCP. Read the instructions that come with the rack shelf or mounting kit for installation procedures.

The IPCP 505 includes rubber feet so it can be set on a table. If you are going to mount the unit to a rack shelf and these feet were attached to the enclosure, remove the feet before mounting.

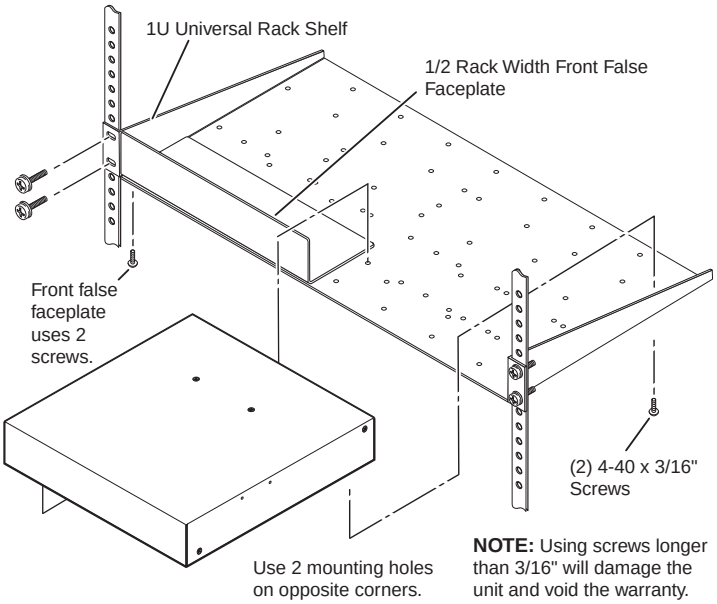

UL Rack Mounting Guidelines

The following **Underwriters Laboratories (UL)** guidelines pertain to the safe installation of the IPCP 505 in a rack.

1. **Elevated operating ambient temperature** — If installed in a closed or multi-unit rack assembly, the operating ambient temperature of the rack environment may be greater than room ambient temperature. Therefore, install the IPCP in an environment compatible with the maximum ambient temperature (Tma = +122 °F, +50 °C) specified by Extron.
2. **Reduced air flow** — Install the equipment in a rack so that the amount of air flow required for safe operation of the equipment is not compromised.
3. **Mechanical loading** — Mount the equipment in the rack so that a hazardous condition is not achieved due to uneven mechanical loading.
4. **Circuit overloading** — Connect the equipment to the supply circuit and consider the effect that circuit overloading might have on overcurrent protection and supply wiring. Appropriate consideration of equipment nameplate ratings should be used when addressing this concern.
5. **Reliable earthing (grounding)** — Maintain reliable grounding of rack-mounted equipment. Pay particular attention to supply connections other than direct connections to the branch circuit (such as use of power strips).

Rear Panel Features and Connections

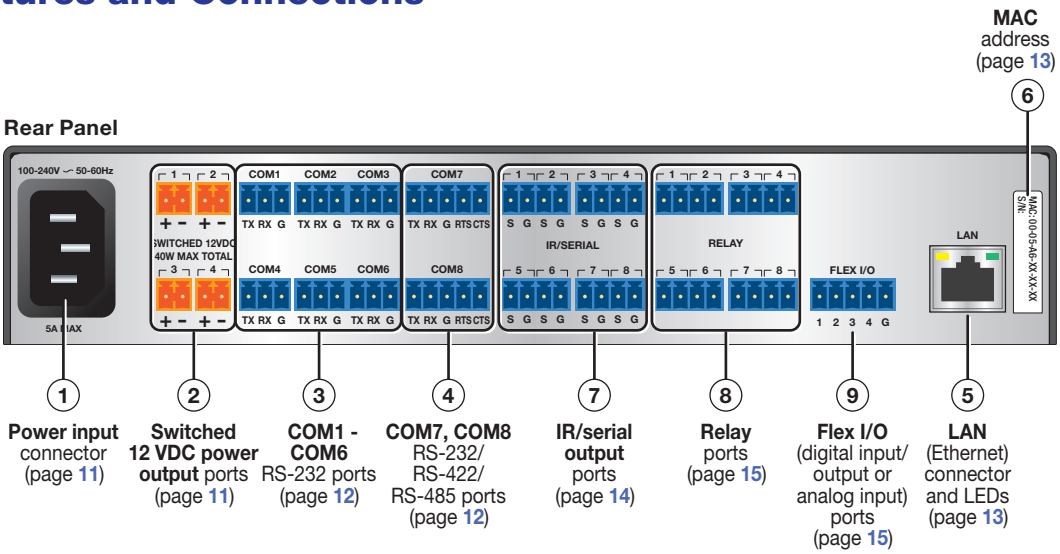

Figure 6. **IPCP 505 Rear Panel**

Power Connections

① **Power input connector** — Connect the IPCP to a 100-240 VAC power source here.

② **Switched 12 VDC power output ports** — These four ports provide 12 VDC output up to a combined maximum of 40 watts. Once configured, each port can be separately turned on or off. These ports are monitored continuously for total power usage (draw).

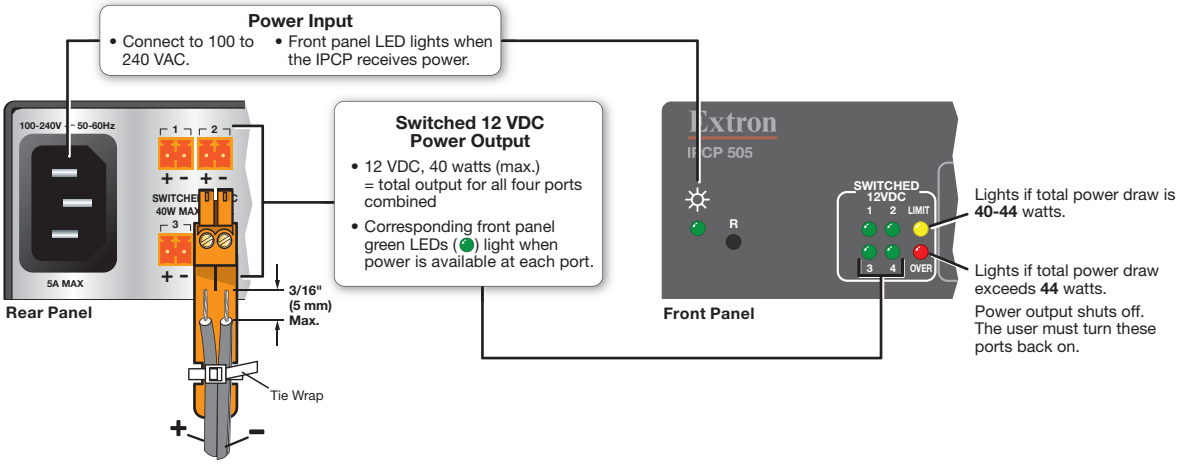

Figure 7. **Switched Power Output Ports**

- When the total power usage exceeds a threshold of 40 watts but is still below 44 watts, the IPCP enters the **limit mode**, during which the yellow front panel Limit LED lights. If you have configured the unit to do so, the IPCP can issue a power overcurrent notice.
- If power usage exceeds a second, higher threshold (44 watts), the IPCP enters **overcurrent mode**. It turns these ports off, and the red front panel Over LED lights.

  If the ports are disabled, the user must disconnect or fix the attached devices to correct the problem, after which power output can be re-enabled via controls in the IPCP internal web pages or via an SIS command.

Bidirectional Control and Communication Connections and Features

③ **COM1 through COM6 RS-232 ports** (-5 VDC to +5 VDC) and

④ **COM7 and COM8 RS-232/RS-422/RS-485 ports** (-5 VDC to +5 VDC) — Use COM ports for serial control of a display or other device and to receive status messages from the connected devices. These ports can send commands from a driver file.

IPCP 505 serial protocol:

- 300 to 115200 baud (9600 baud = default)
- 8 (default) or 7 data bits
- 1 (default) or 2 stop bits
- No parity (default), or even or odd parity
- Flow control support
  - COM1 - COM6: software-only (XON, XOFF)
  - COM7 and COM8: hardware and software

Use the following diagram as a wiring guide to cable the IPCP to other devices.

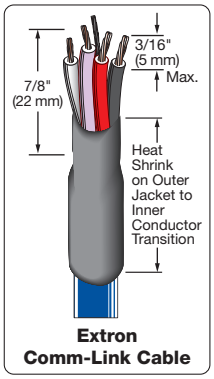

TIP: Comm-Link (CTL and CTLP) cable, shown at left, is recommended for these connections. For best results and to avoid short circuits, use shielded wires or wires insulated using heat shrink (instead of bare wires) for the common/drain wires.

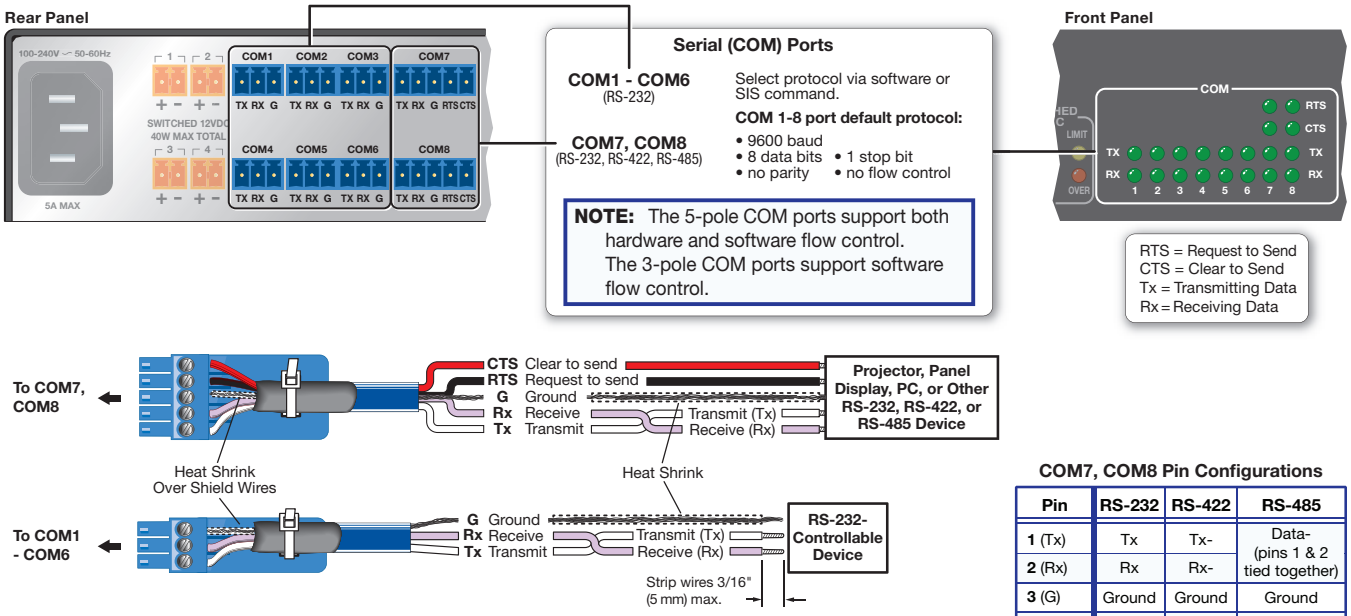

COM7, COM8 Pin Configurations

Pin	RS-232	RS-422	RS-485
1 (Tx)	Tx	Tx-	Data- (pins 1 & 2 tied together)
2 (Rx)	Rx	Rx-	
3 (G)	Ground	Ground	Ground
4 (RTS)	RTS	Tx+	Data+ (pins 4 & 5 tied together)
5 (CTS)	CTS	Rx+	

NOTE: If you use cable that has a drain wire, tie the drain wire to ground at both ends.

Figure 8. Wiring for Serial Control

For bidirectional serial communication, the transmit, ground, and receive pins must be wired at both the IPCP 505 and the other device. Each projector or other device may require different wiring. For details, see the manual for that equipment or read the Extron device driver communication sheet.

NOTE: Maximum distances between the IPCP and the device being controlled may vary up to 200 feet (61 m). Factors such as cable gauge, baud rates, environment, and output levels (from the IPCP and the device being controlled) all affect transmission distance. Distances of about 50 feet (15 m) are typically not a problem. In some cases the IPCP may be capable of transmitting and controlling a given device via RS-232 up to 250 feet (76 m) away, but the RS-232 response levels of that device may be too low for the IPCP to detect.

⑤ **LAN (IP) connector and LEDs** — To connect the IPCP to an Ethernet network (so you can configure and control the IPCP and the devices connected to it), plug a cable into this RJ-45 socket and connect the other end of the cable to a network switch, hub, router, or PC connected to a LAN or the Internet.

Cabling:

- For 10Base-T (10 Mbps) networks, use a CAT 3 or better cable.
- For 100Base-T (max. 155 Mbps) networks, use a CAT 5 cable.

You must configure this port before using it. Configure the settings for this port via either SIS commands or Global Configurator. See the programming sections (**Software-based Configuration and Control** starting on page 18 and **SIS Programming and Control** starting on page 50) of this guide for details on configuration.

Activity LED — This yellow LED blinks to indicate network activity.
Link LED — This green LED lights to indicate a good network connection.

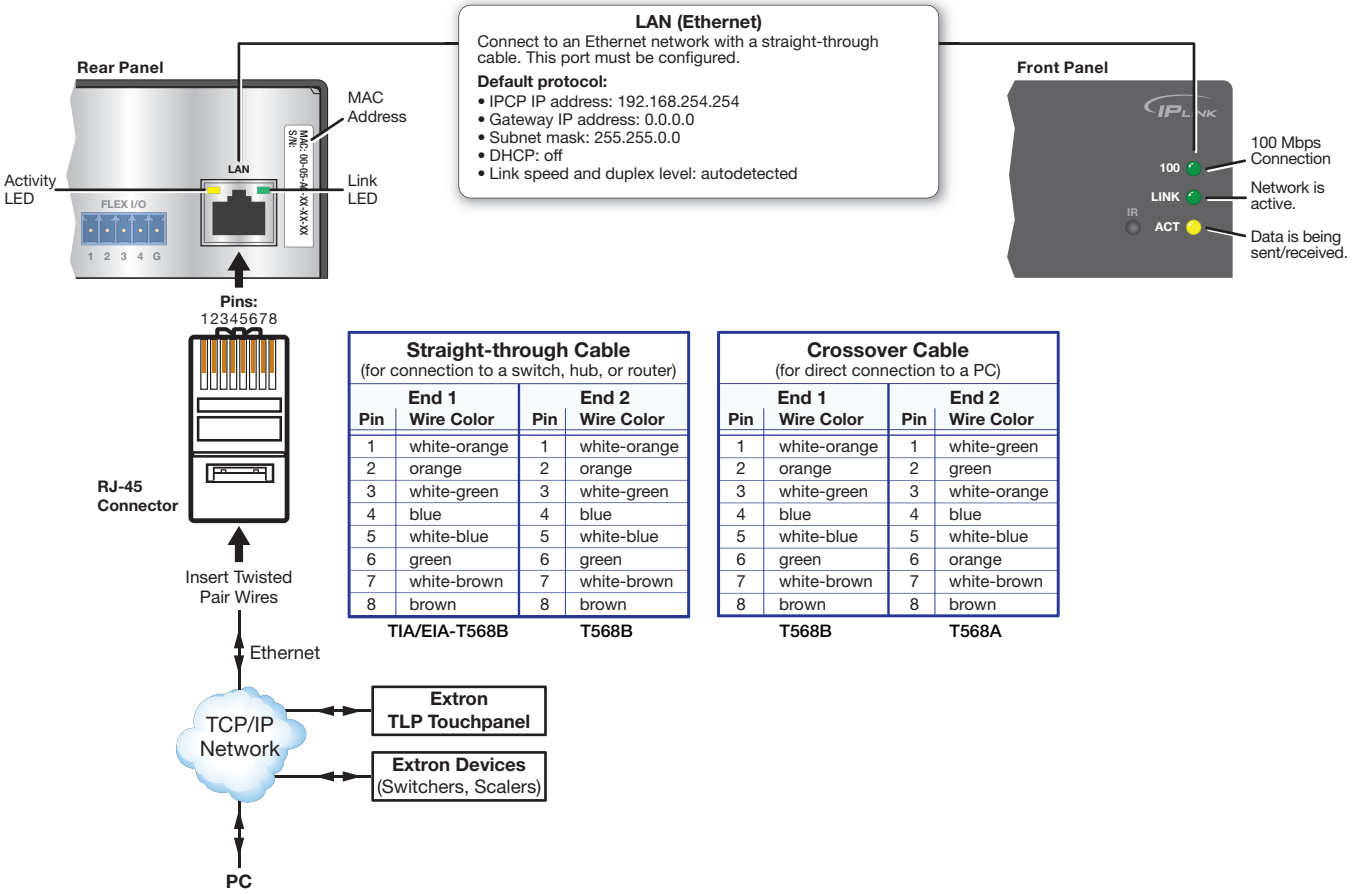

Straight-through Cable
(for connection to a switch, hub, or router)

End 1 Pin	End 1 Wire Color	End 2 Pin	End 2 Wire Color
1	white-orange	1	white-orange
2	orange	2	orange
3	white-green	3	white-green
4	blue	4	blue
5	white-blue	5	white-blue
6	green	6	green
7	white-brown	7	white-brown
8	brown	8	brown
TIA/EIA-T568B		T568B	

Crossover Cable
(for direct connection to a PC)

End 1 Pin	End 1 Wire Color	End 2 Pin	End 2 Wire Color
1	white-orange	1	white-green
2	orange	2	green
3	white-green	3	white-orange
4	blue	4	blue
5	white-blue	5	white-blue
6	green	6	orange
7	white-brown	7	white-brown
8	brown	8	brown
T568B		T568A	

Figure 9. **LAN Connector and LEDs**

- Use a **straight-through cable** for connection to a switch, hub, or router.
- Use a **crossover cable** for connection directly to a PC. Wire the connector as shown in the tables above.

⑥ **MAC address** — This is the unique user hardware ID number (MAC address) of the unit (for example, 00-05-A6-05-1C-A0). You may need this address during configuration.

Unidirectional Control and Communication Connections

⑦ **IR/Serial output ports** — An IPCP 505 can use infrared signals or unidirectional RS-232 serial signals to control various devices (up to 32 total for IR) via these eight ports. Set output signal type (IR or serial) during configuration. The figure below shows wiring examples.

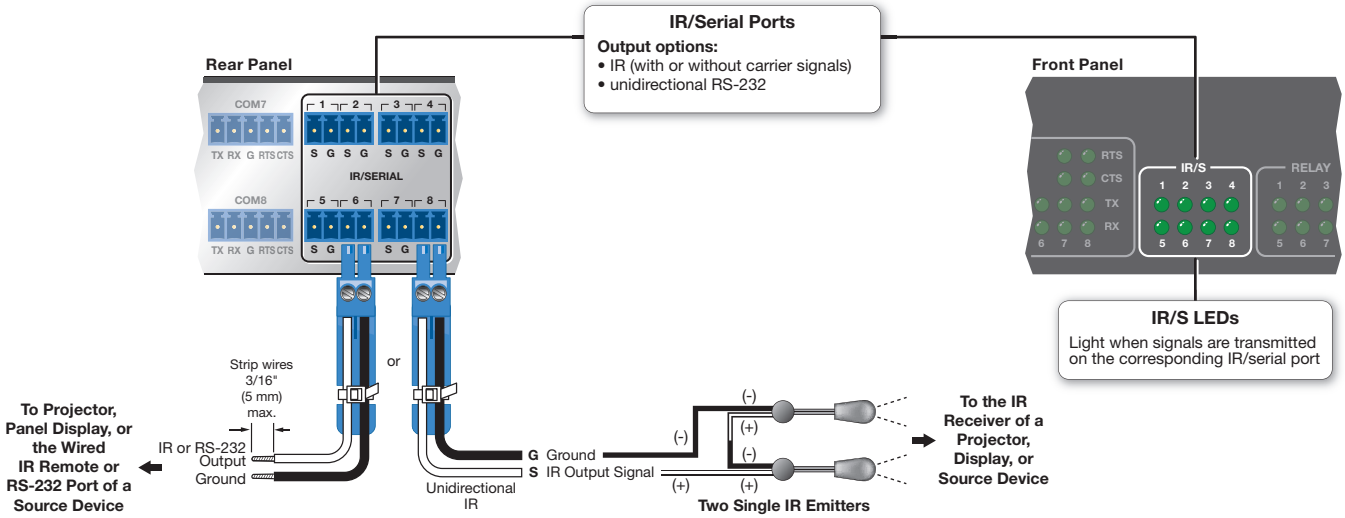

Figure 10. Wiring the IR/Serial Ports

Serial control: Connect one of these ports to the serial control receive (Rx) and ground pins of the device to be controlled. These ports have the same serial protocol options as the COM ports.

IR control: Connect one of these ports directly to the wired IR port of another device. Or insert the wires from up to four IR Emitters into an IR port and place the heads of the emitters over or next to the IR signal pickup windows of the devices. For wiring, see the following figures or the *IR Emitter Installation Guide*.

NOTE: Each emitter must be within 100 feet of the IPCP for best IR control results.

Installing One Single Emitter

One Single IR Emitter

Installing One Dual Emitter

Dual IR Emitter

Installing Two Single Emitters

When installing only single emitters, tie them **in series** as shown below.

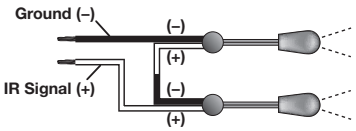

Two Single IR Emitters

⑧ **Relay ports** — Eight relay ports provide control for power, screen/projector lifts, window coverings, and similar items, when trigger events occur.

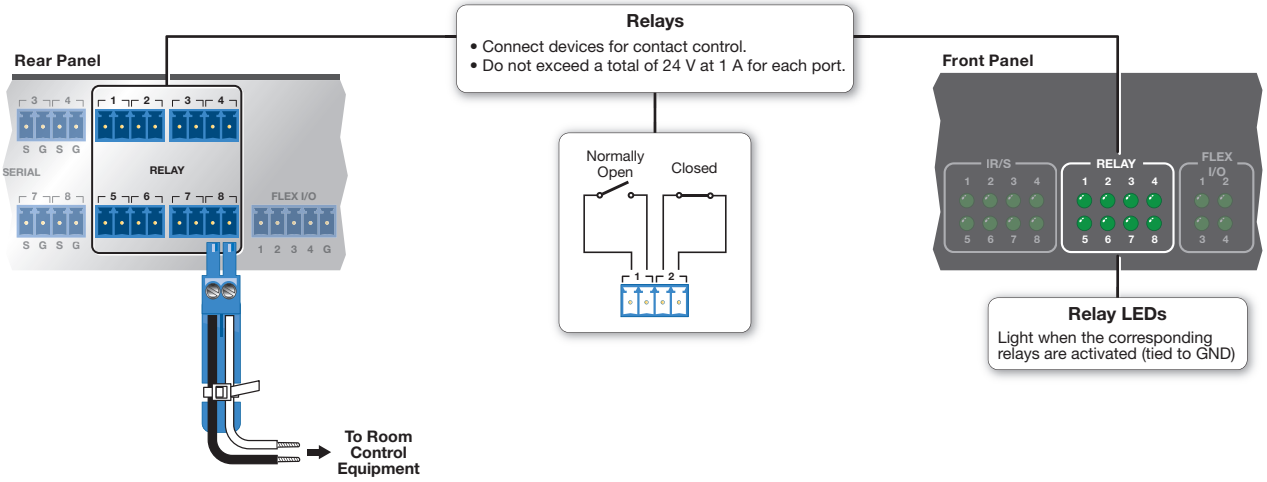

Figure 11. Wiring the Relay Ports

These relay contacts may be used to control any equipment as long as the contact specifications of a total of 24 volts at 1 ampere are not exceeded for each port. These relays are normally open by default.

When activated, the open contacts close. They can be set up to operate in one of two ways:

- **Latching** (brief contact) (press to turn on, press to turn off), or
- **Momentary** (timed) (press to turn on, timeout to turn off).

In the timed mode the default timeout period is ½ second (500 ms). Use Global Configurator software or SIS commands to change the length of the timeout period. See the X63 variable on page 56 and the corresponding **relay port commands** on page 61 in the "SIS Programming and Control" section for details.

Additional Control Ports

⑨ **Flex I/O ports** —To allow the IPCP 505 to monitor devices to trigger events, connect switches, sensors, LEDs, relays, or similar items to these four ports, which can be configured as analog inputs, or as digital inputs or outputs, with or without +5 VDC pull-up. These ports can trigger events or functions (such as triggering relays, issuing commands, or sending an e-mail) that have been configured using Global Configurator (GC) software.

Analog input — When a flex I/O port is configured as an analog input, the port can measure 0 to 25.3 VDC with 12-bit accuracy. A DC level is indicated by a count from 0-4096 (≈ 6 mV per count).

Digital input — To allow the IPCP to monitor external devices that do not use RS-232 communication, connect a switch, motion sensor, moisture sensor, tally feedback output, button pad, or a similar item to a flex I/O port and configure it for digital input. When configured as a digital input, the port is set to measure two states: high and low. The port accepts 0 to 12 VDC input. The threshold voltages are as follows: a voltage below 2.0 VDC is measured as logic low, and a voltage above 2.8 VDC is measured as logic high. There is also an internal, +5 VDC, selectable, pull-up resistor for this circuit.

Digital output — To power LEDs, incandescent lights, or other devices that accept a TTL signal, or to provide contact closure control for projector lifts, motorized screens,

room or light switches via an Extron IPA T RLY4, you can use one or more of these ports as a digital output. When a port is configured for digital output, it offers two output states: on and off. When the port is set to an “on” state, (the circuit is closed), the I/O pin is connected to ground. Each I/O port is capable of accepting 250 mA, maximum. When the port is set to the “off” state (the circuit is open), the output pin is not connected. If the application calls for TTL compatibility, the digital output circuit can be set up to provide a 2k ohm pull-up resistor to +5 VDC.

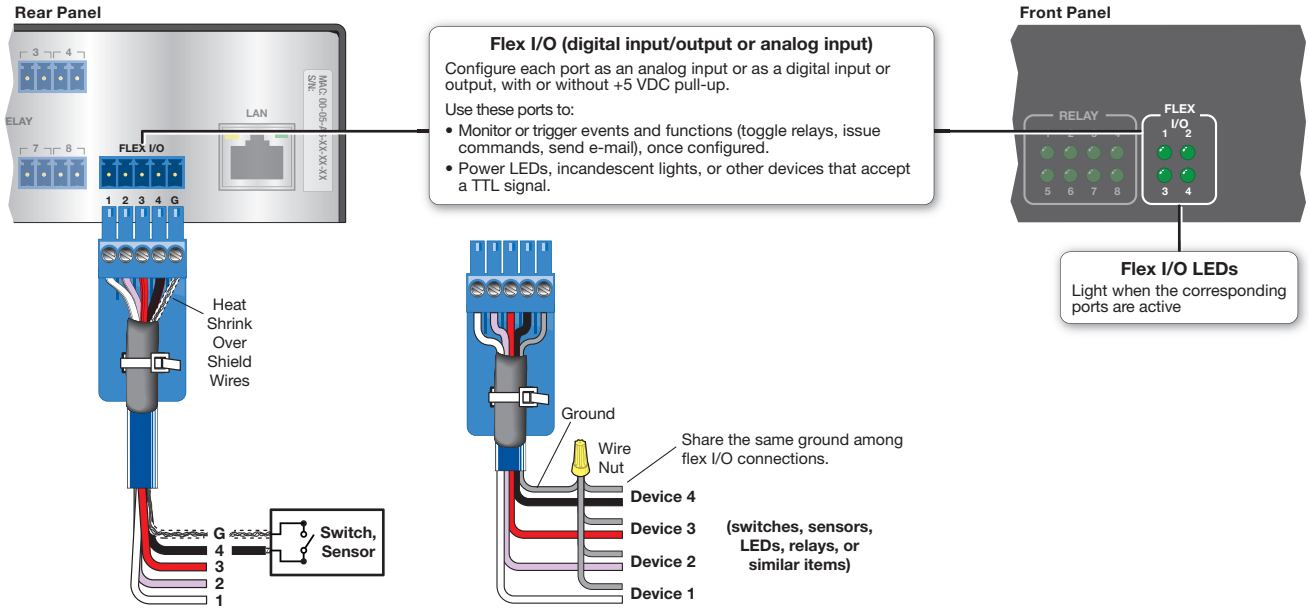

Figure 12. **Flex I/O Port Wiring Examples**

Resetting the Unit

There are five reset modes that are available by pressing the Reset button on the front panel. The Reset button is recessed, so use a pointed stylus, ballpoint pen, or Extron Tweeker to access it. See the **reset modes table** on the next page for a summary of the modes.

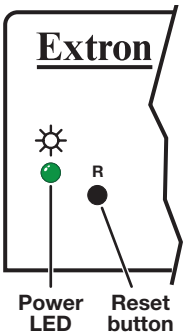

ATTENTION: Review the reset modes carefully. Using the wrong reset mode may result in unintended loss of flash memory programming, port reassignment, or an IPCP unit reboot.

The reset modes (with the exception of Mode 2) close all open IP and Telnet connections and close all sockets.

NOTE: If you hold down the reset button continuously, the LED blinks every 3 seconds, and the unit enters a different mode, from Modes 3 through 5. For Mode 5 the LED blinks three times, the third blink indicating the last mode. The modes are separate functions, not a continuation from Mode 1 to Mode 5.

IPCP Controller Reset Mode Summary				
	Mode	**Activation**	**Result**	**Purpose and Notes**
Use Factory Firmware	**1**	Hold down the recessed Reset button while applying power to the IPCP. **NOTE:** After a mode 1 reset is performed, update the IPCP firmware to the latest version. **Do not** operate the IPCP controller firmware version that results from the mode 1 reset. This mode temporarily resets the unit to factory default until power is recycled. If you want to use the factory default firmware, you must upload that version again. See the *Global Configurator Help* file for firmware upload instructions.	**The IPCP controller reverts to the factory default firmware.** Event scripting does not start if the unit is powered on in this mode. All user files and settings such as drivers, adjustments, and IP settings are maintained. **NOTE:** If you do not want to update firmware, or you performed a mode 1 reset by mistake, cycle power to the unit to return to the firmware version that was running prior to the mode 1 reset. Use the **ØQ** SIS command to confirm that the factory default firmware is no longer running (look for asterisks following the version number).	Use mode 1 to revert to the factory default version if incompatibility issues arise with user-loaded firmware. **NOTE:** User-defined web pages may not work correctly if using an earlier firmware version.
Enable SIS Serial Console	**2**	Press and release the Reset button. Within 2 seconds type +++ on the keyboard. **NOTE:** If the three "+"characters (+++) are not entered in the 2-second time frame, the COM port becomes a control port only.	**The connected COM port becomes a console port to send SIS commands.** Scripting remains on.	Mode 2 enables the SIS console port.
Run or Stop Events	**3**	Hold down the Reset button for about 3 seconds until the Power LED blinks once, then release and press Reset momentarily (for <1 second) within 1 second*.	**Mode 3 turns events on or off.** If the events are currently stopped following the momentary press, the power LED flashes twice indicating the starting of events. If the events are currently running following the momentary press, the Power LED flashes three times indicating the stopping of events.	Mode 3 is useful for troubleshooting.
Reset All IP Settings	**4**	Hold down the Reset button for about 6 seconds until the Power LED blinks twice (once at 3 seconds, again at 6 seconds). Then, release and press Reset momentarily (for <1 second) within 1 second*.	**Mode 4:** • Enables ARP capability • Sets the IP address back to factory default (192.168.254.254) • Sets the subnet back to factory default (255.255.0.0) • Sets the default gateway address to the factory default (0.0.0.0) • Sets port mapping back to factory default • Turns DHCP off • Turns events off	Mode 4 enables you to set IP address information using ARP and the MAC address.
Reset to Factory Defaults	**5**	Hold down the Reset button for about 9 seconds until the Power LED blinks three times (once at 3 seconds, again at 6 seconds, again at 9 seconds). Then release and press Reset momentarily (for <1 second) within 1 second*.	**Mode 5 performs a complete reset to factory defaults (except the firmware).** • Does everything mode 4 does • Clears driver-port associations and port configurations (IR and serial) • Removes button/touchpanel configurations • Resets all IP options • Removes scheduling settings • Removes/clears all files from the IPCP controller	Mode 5 is useful if you want to start over with configuration and uploading, and also to replace events.

*For modes 3, 4, and 5, nothing happens if the momentary press does not occur within 1 second.

Software-based Configuration and Control

This section of the guide is divided into the following topics:

- **Configuration and Control: an Overview**
- **Basic Setup Steps: a Guide to this Section and Other Resources**
- **Communicating with the IPCP**
- **Configuring the IPCP for Network Communication**
- **Global Configurator Software for Windows**
- **Advanced Configuration**
- **Controlling an IPCP 505**
- **Controlling the IPCP 505 with a Touchpanel**
- **Customizing the IPCP Control Web Pages**
- **Troubleshooting**

Configuration and Control: an Overview

An IPCP 505 must be configured before use in order to recognize and accept commands and pass them on to the controlled devices. It can be configured and controlled via a host computer attached to the LAN (local area network) port. See the **Hardware Features and Installation** section beginning on page 7 for details about the port and cabling.

- The primary means for configuring the controller is by using the Extron Global Configurator (GC) software. This method requires a properly configured PC with Windows XP or a higher version of Windows installed. Global Configurator generates GlobalViewer web pages that are uploaded to the IPCP and can be used to control the unit and make adjustments to its settings.

  NOTE: Microsoft Internet Explorer is currently the only web browser that fully supports GlobalViewer pages.

- Alternatively the default web pages embedded within the IPCP 505 provide a means to perform some setup, adjustment, and control via a web browser (Internet Explorer version 5.5+, or Mozilla® Firefox® version 1.0+) from any type of network-enabled computer.
- The third way to control and configure the controller is by using Simple Instruction Set (SIS) commands via Telnet (or a similar program), a web browser, or RS-232. SIS commands are discussed in detail in the **SIS Programming and Control** section starting on page 50.

Basic Setup Steps: a Guide to this Section and Other Resources

NOTE: Setup/configuration may be performed away from the job site.

1. **Configure the IPCP for network communication**. See **Configuring the IPCP for Network Communication** on this page.
2. **Download or install Global Configurator and other Extron software** (IR Learner, Firmware Loader, GUI Configurator, DataViewer) **and device drivers.** See the *IPCP 505 Setup Guide*, the software disc that was shipped with the unit, and the Extron website for instructions.

   NOTE: The setup guide is shipped with the unit and is available at **www.extron.com**. The included disc contains software, device drivers, PDF files of the guides, and additional documentation that was available when the unit was shipped. The setup guide and help files outline most of the common tasks required for setup.

3. **Create a Global Configurator project and configure basic settings and functions.** See the *Global Configurator Help* file for step-by-step procedures.
4. **Configure additional or advanced functions**, if desired.
   See the *Global Configurator Help* file for step-by-step instructions. For information on IR learning, see the *IR Learner Help* file.

   NOTE: If Extron TouchLink TLP touchpanels will be part of the system, you also need to use GUI Configurator to design and set up the interface for the touchpanels, preferably before completing the IPCP configuration.

5. **Save and upload the configuration to the IPCP.**
6. **Control the IPCP and devices connected to it** by using the IPCP embedded web pages, its GlobalViewer (GV) web pages, or a fully configured TLP touchpanel.
   See **Controlling an IPCP 505** on page 36.

Communicating with the IPCP

To communicate with the IPCP 505, you must power on the IPCP and the PC you will use to configure it, and connect the two devices for IP (network) communication.

- **Power:** see page 11 for **power input** details.
- **Communication:** **connect** the IPCP to a network (see page 13). See "Configuring the IPCP for Network Communication" below to set the unit up to talk with the PC.

Configuring the IPCP for Network Communication

Both the PC and the IPCP 505 must be configured with the correct protocols and IP addresses and connected to the same subnetwork.

When you power on the IPCP for the first time, you have a choice of several ways to set up the IP address:

- Use the ARP (address resolution protocol) command.
- Use the Global Configurator software.
- Use a web browser.
- Use SIS commands via Telnet or a similar utility.

If you use a web browser or Telnet the first time you connect a PC to an IPCP via IP, you may need to temporarily change the IP settings of the PC in order to communicate with the controller. See **Setting up the PC for IP communication with an IPCP 505** on page 23. Then you must change the default IP address, subnet mask, and [optional]

administrator name and password of the controller in order to use the IPCP on a network. After setting up the IPCP 505 for network use, you can reset the PC to its original network configuration.

IPCP 505 LAN port defaults:

- **IP address:** 192.168.254.254
- **Gateway IP address:** 0.0.0.0
- **Subnet mask:** 255.255.0.0
- **DHCP:** off
- **Link speed and duplex level:** autodetected

NOTE: Both the computer and the IPCP must be connected to the same subnet on a LAN (using a straight-through cable). Alternatively, you can use a crossover Ethernet cable to connect the controller directly to the Ethernet card in the computer.

The following instructions assume that you have already connected the PC to the LAN port on the IPCP and powered on the controller and the PC.

Configuring the IPCP for Network Use Via Global Configurator

You can configure the IP address of the controller via an IP (Ethernet) connection using Global Configurator (GC) software. See the *Global Configurator Help* file for basic information on using the software and setting up a project. The "Add an IPCP 505 and Set the IP Address" topic in the help file provides step-by-step instructions on how to use GC to set up the IP address of the IPCP.

Configuring the IPCP for Network Use Via the ARP Command

The ARP (address resolution protocol) command tells the computer to associate the MAC (media access control) address of the IPCP 505 with the assigned IP address. You must then use the ping utility to access the controller, at which point the IP address of the controller is reconfigured.

Use ARP to configure the IP address as follows:

1. Obtain a valid IP address for the IPCP 505 from your network administrator.
2. Obtain the MAC address (UID #) of the IPCP from the label on its rear panel. The MAC address should have this format: 00-05-A6-xx-xx-xx.
3. If the IPCP has never been configured and is still set for factory defaults, go to step **4**. If not, perform a Mode 4 system reset. For detailed information on reset modes, see **Resetting the Unit** starting on page 16 in the "Hardware Features and Installation" section.

   ATTENTION: The IPCP must be configured with the factory default IP address (192.168.254.254) before the ARP command is executed.

4. To change to the new IP address, at the PC, access the command prompt, then enter the `arp –s` command. Type in the desired new IP address for the unit and the MAC address of the unit (listed on the **rear panel**, see page 13). For example:
`arp –s 10.13.197.7 00-05-A6-03-69-B0`

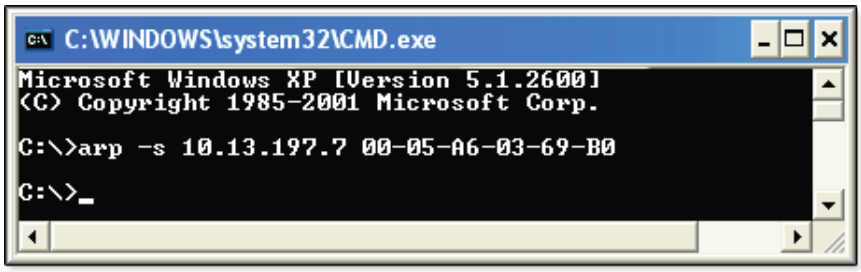

Figure 13. Sending the `arp –s` Command

After the arp -s command is issued, the controller changes to the new address and starts responding to the ping requests, as described in the next step.

5. Execute a ping command by entering "ping" followed by a space and the new IP address at the command prompt. For example:
`ping 10.13.197.7`

You must ping the IPCP 505 in order for the IP address change to take place. The response should show the new IP address, as shown in figure 13.

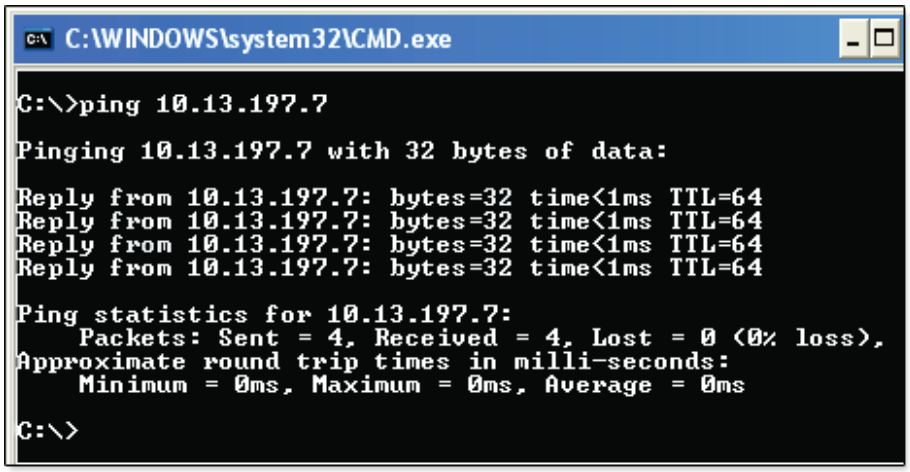

Figure 14. Ping Command and Response

You can reconnect using either Telnet or a web browser to verify that the update was successful.

6. Optional step: after verifying that the IP address change was successful, enter and issue the `arp –d` command at the prompt. For example:

`arp –d 10.13.197.7` removes 10.13.197.7 from the ARP table

or

`arp –d*` removes all static IP addresses from the ARP table.

Configuring the IPCP for Network Use Via a Web Browser

The default web pages that are preloaded on the IPCP 505 are compatible with popular web browsers such as Microsoft Internet Explorer (version 5.5 or higher) or Mozilla Firefox (version 1.0 or higher). However, the IPCP and the PC must both be part of the same subnet before they can communicate. You must change the IP address of the PC to one that is on the same subnet as the default IP address of the IPCP 505 (192.168.254.254).

NOTES:

- This method requires connecting the IPCP to the LAN port of the PC using a **crossover** network cable (see page 13 for **cabling** details).
- Make a note of the host TCP/IP configuration of the PC before changing its IP address and make sure the PC and IPCP are on the **same** subnet.

1. Temporarily change the IP address of the host PC. See **Setting up the PC for IP communication with an IPCP 505** on page 23 for step-by-step instructions.
2. Obtain a valid IP address for the controller from your network administrator.
3. Launch the web browser on the connected PC (for which you set up the network configuration earlier), and enter `http://192.168.254.254/` in the address box. The default web page of the IPCP 505 is displayed.
4. Select the **`Configuration`** tab (see figure 15, ①).
5. Select **`System Settings`** from the menu on the left of the screen (see figure 15, ②). A web page appears.

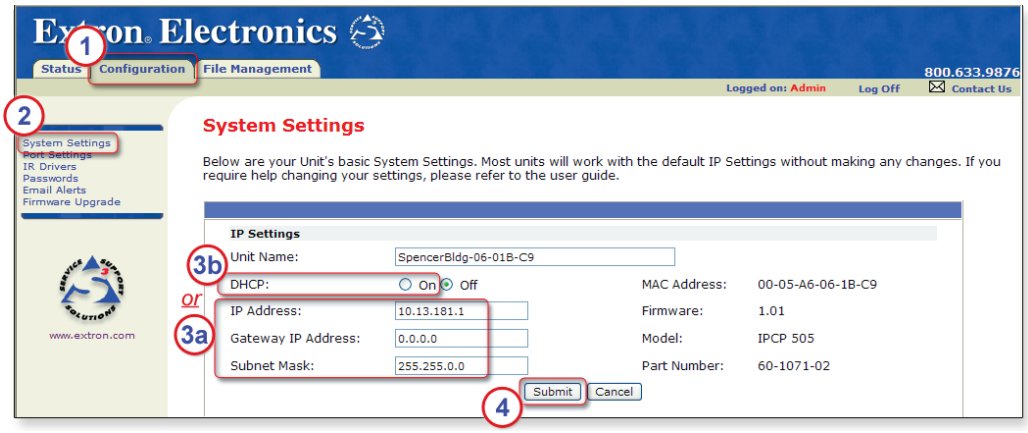

Figure 15. Configuring for Network Use Via the System Settings Embedded Web Page, Steps 4 Through 7

6. Set the IPCP for the new IP address using either step **6a** *or* step **6b**.
   a. Enter the new IP address for the IPCP 505, the corresponding subnet mask, and the gateway address (see ③a). IP addresses and subnet masks follow standard naming and numbering conventions. The IP network administrator should provide the IP addresses and subnet mask to be used with this controller.
   b. Select **`DHCP On`** (see ③b).
7. Click **`Submit`** (see ④). It takes a minute or more for the controller to store the new settings. Once the controller's IP address is changed, you lose communication with the controller.
8. Close the browser.
9. After changing the IP settings of the controller, change the TCP/IP settings of the PC back to their original configuration.

Configuring the IPCP for Network Use Via SIS Commands and Telnet

The IPCP and the PC must both be part of the same subnet before they can communicate. You must change the IP address of the PC to one that is on the same subnet as the default IP address of the IPCP 505 (192.168.254.254).

NOTES:

- This method requires connecting the IPCP to the LAN port of the PC using a **crossover** network cable (see page 13 for **cabling** details).
- Make a note of the host TCP/IP configuration of the PC before changing its IP address and make sure the PC and IPCP are on the **same** subnet.

1. Temporarily change the IP address of the host PC (see **Setting up the PC for IP Communication With an IPCP 505** [the next topic in this section] on page 23 for instructions).
2. Start Telnet on the PC:
   a. Click the **`Start`** menu and select **`Run`**. The Run dialog box appears, as shown at right.
   b. Type `telnet`, a space, and the default IP address (192.168.254.254) into the **`Open`** field, and click **`OK`**.

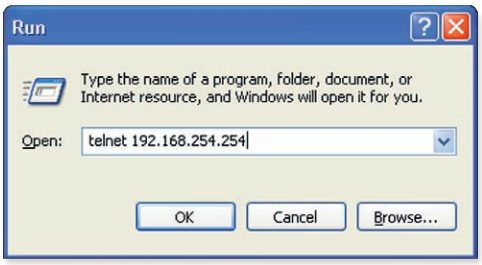

Figure 16. Step 2b: The Run Dialog Box

3. Set the IPCP to the new IP address by doing one of the following.
   - Enter SIS command Esc X14 `CI`←, where X14 is the new IP address (see the **SIS Programming and Control** section starting on page 50) to set the IP address.
   - Enter SIS command `1DH`← to enable DHCP.
4. After changing the IP address of the IPCP controller, change the TCP/IP settings of your PC back to their original configuration.

Setting up the PC for IP Communication With an IPCP 505

You need a Windows-based (Windows 2000, Windows XP, or higher) PC equipped with an operating network adapter. For your PC to work with Extron Ethernet-controlled products, the TCP/IP protocol must be installed and properly configured, and you must change the IP address of the PC to one that is on the same subnet as the IPCP.

If you use an existing Ethernet LAN intranet, your network administrator can provide you with a unique IP address for the controller or confirm whether you need to set up the IPCP 505 for DHCP (Dynamic Host Configuration Protocol) to have an address assigned automatically when you sign on.

1. Open the Network Connections page as follows:

   - Locate and right-click on **My Network Places** on the Windows 2000, Windows XP (or higher version) desktop, then click on **Properties**.

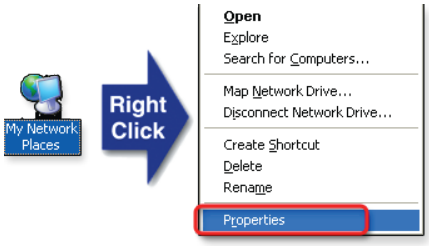

   or

   - Click on the **Start** menu, click on **Settings** (if needed), click on **Control Panel** to open the Control Panel window, and double-click on **Network and Dial-up Connections** (Windows 2000), **Network Connections** (Windows XP, shown below),

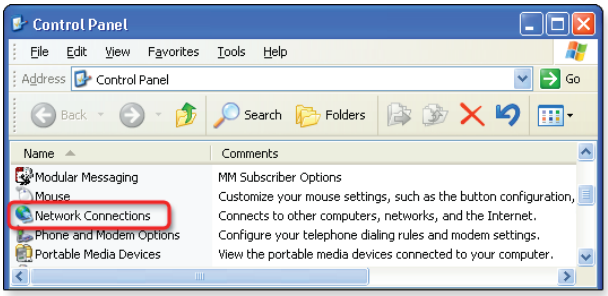

   or **Network and Sharing Center** (Windows 7, shown below).

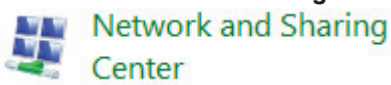

2. Access the properties dialog box.

   - For Windows XP, right-click on **Local Area Connection**, then select **Properties**.

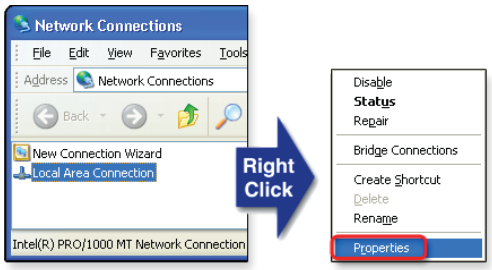

   - For Windows 7, click on **Local Area Connection** to open the Local Area Connection Status dialog box, then click **Properties**.

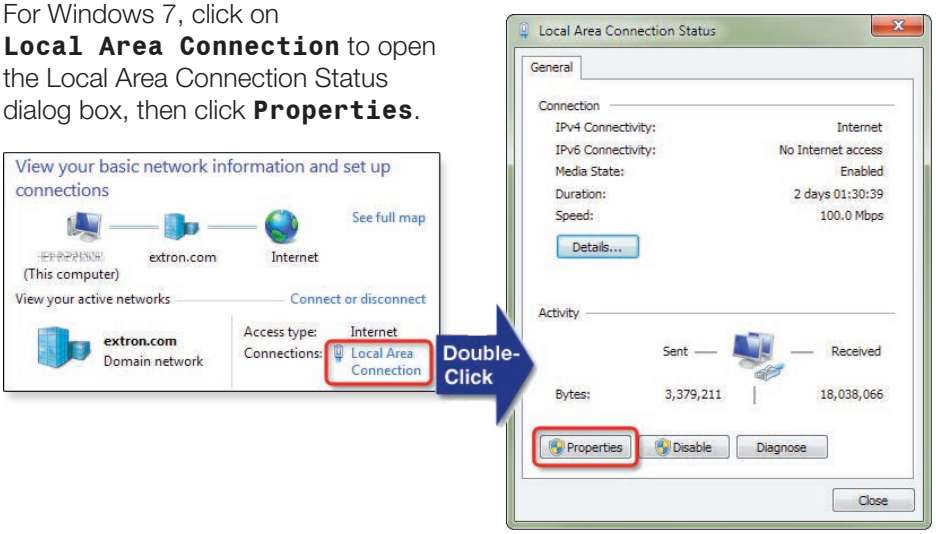

3. Select **`Internet Protocol (TCP/IP)`** and click on the **`Properties`** button, as shown in figure 17 below for Windows XP (left) and Windows 7 (right). If **`Internet Protocol (TCP/IP)`** is not on the list, it must be added (installed). See the Microsoft Windows user manual or the Windows online help system for information on how to install the TCP/IP protocol.

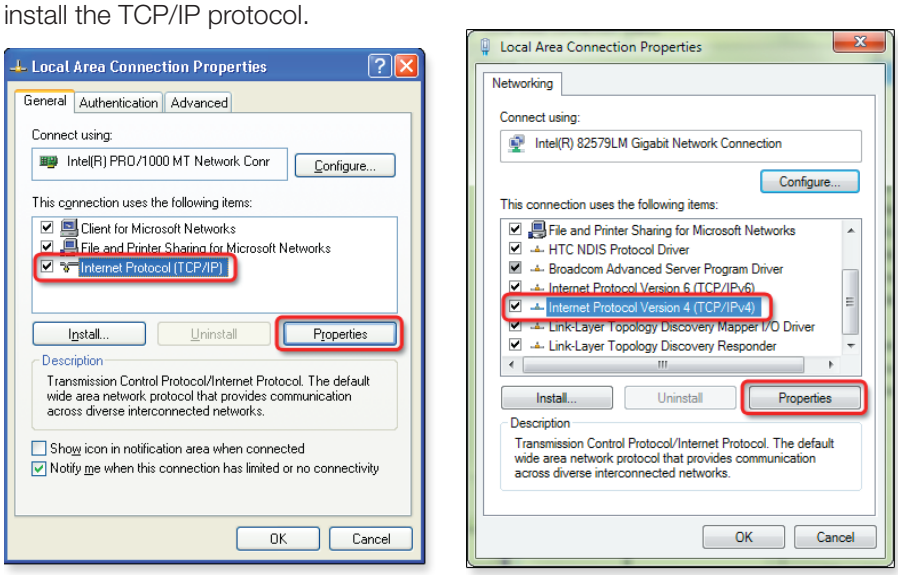

Figure 17. Selecting Internet Protocol (TCP/IP) For the LAN Connection

4. Write down the PC's current IP address and subnet mask below. If your PC is set to "Obtain an IP address automatically," make a note of that, instead. You will need to restore these settings to the PC later.

IP address:

. . . .

Subnet mask:

. . . .

5. Change the IP address of the **PC** so it can communicate with the IPCP, and change the IP settings of the controller.

   a. Click the **`Use the following IP address`** button (see figure 18, 1a).

   b. Enter the following values, as shown in the following pictures for Windows XP (left) and Windows 7 (right) (see 1b):

      IP address: 192.168.254.253
      Subnet mask: 255.255.0.0
      Default gateway: blank or 0.0.0.0

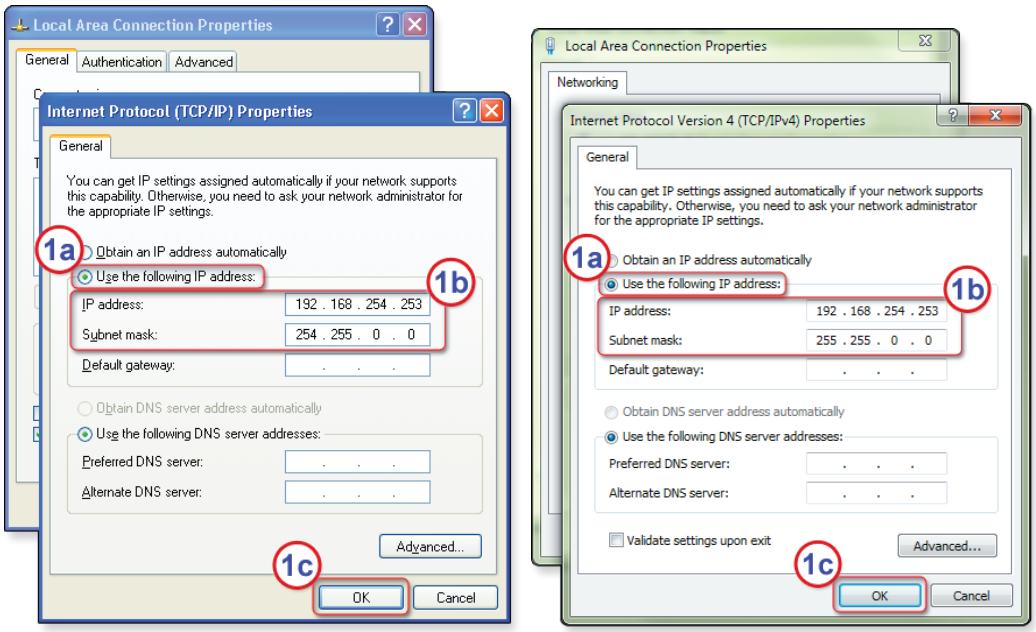

Figure 18. Step 5: Changing the IP Address of the PC

   c. Click the **OK** button to save the changes and exit the network setup (see 1c). Reboot the PC, if required, for the changes to become effective.

6. Plug one end of a CAT5 Ethernet crossover cable into the LAN connector on the IPCP (see page 13 for RJ-45 **LAN connector wiring**). Plug the other end of the Ethernet cable into the Ethernet port on the PC.

> **NOTE:** If a network hub or switch is used between the PC and the IPCP, use a straight-through CAT 5 cable instead of a crossover cable (see page 13 for **pin assignments**).

7. Set up the IP address of the **IPCP** using a web browser, or the same SIS commands as described earlier in this section.

8. Restore the previous IP configuration of the **PC** by following steps **1**, **2**, **3**, and **5**, but use the original IP address settings for the PC that you wrote down in step **4**.

Global Configurator Software for Windows®

The included Global Configurator (GC) program for Windows offers the best, most complete way to configure and customize the controller. GC provides the ability to generate a web browser-based GlobalViewer (GV) application and web pages for each IP Link-based device (IPCP 505, IP Link control processor, System 5 IP, MLC 226 IP, MLC 104 IP Plus, or other Extron device) on a network. Once an IPCP 505 is configured, its GlobalViewer web pages allow the user to manage, monitor, and control the IPCP and the devices connected to it.

Other setup options include using SIS commands and the factory-embedded web pages, but many setup features are available only via Global Configurator. GC includes some functions found on the embedded web pages of the controller and many additional features that are available only through the software.

Downloading the Software and Getting Started

Global Configurator software updates and a large variety of device drivers can be downloaded at no charge from the Extron website (**www.extron.com**). When you locate the desired software or driver package, follow the on-screen directions to download and install it.

NOTE: Ethernet, serial, and infrared (IR) device drivers (for controlling projectors, VCRs, DVD players, and so forth) are available on the Extron website…

- As individual device driver files
- As an IP Link driver package.

If an IR driver does not already exist for an IR-controlled device in your system, you can download the optional IR Learner. It is a free software utility that makes it possible to capture infrared codes from a handheld IR remote control and create custom drivers for operating the corresponding IR-controlled device.

NOTE: **Do not** change the directory or the name of the directory where the software files are installed by default.

Read the *Global Configurator Help* file for details and step-by-step procedures on how to start a GC project and perform basic setup tasks for an IPCP. The help file contains instructions on how to set the **IP address, gateway IP address, subnet mask, mail server IP address, domain name, Telnet port, web port, SMTP username**, and **SMTP password** so that the IPCP 505 is able to communicate with the network. Obtain this information from your network administrator and set the IP address before continuing.

PC System Requirements

See page 6 in the “Introduction” section for a list of the **minimum hardware and software requirements**.

NOTE: The IPCP 505 requires GC version 3.2 or higher.

Using Global Configurator: Helpful Tips

Resources and Notes

- The *IPCP 505 Setup Guide* is shipped with the unit, and it covers how to install the software and lists other available resources (software, drivers, instructions). It includes a quick reference to the front and rear panel features, and covers basic hardware installation and how to set the IP address of the unit using the ARP command.
- The *Global Configurator Help* file provides information on settings and how to use the Global Configurator program, itself. This help file, included with the software, covers basic setup steps and includes examples of how to use the basic tabs in GC and step by step instructions for typical configuration tasks.
- See **Front Panel Features** on page 9 and **Rear Panel Features and Connections** on page 11 in the "Hardware Features and Installation" section of this guide for features and settings for the ports you will configure in GC.
- If you will configure the IPCP at the installation site, Extron recommends using the driver subscription function within Global Configurator to download drivers for all manufacturer and device types before you go out into the field.
- The Global Configurator project file (`*.gc2` or `*.gcz`) contains configuration settings and it can be saved to a directory or folder for backup or for installation on another IPCP 505 controller. Saving a configuration is recommended before you perform a firmware upgrade.
- Global Configurator 3 is capable of loading all GC2 project files from GC version 2.0.3.3 and up. GCZ files can be opened by clicking **`File`** > **`Open`**, by clicking the toolbar icon, or by double-clicking on the GCZ file. GC2 and GCC files must be imported, however.
- The IPCP can be set up to allow configuration access only to administrators to prevent other users from making changes to settings, events, and controls. If an administrator password is set for the controller, non-administrator users can select inputs, adjust volume, and trigger some other device commands from the GlobalViewer Control pages but are prevented from making any other changes using GlobalViewer web pages.
- IP addresses, subnet mask, and e-mail addresses follow standard naming and numbering protocol. The network administrator provides the IP addresses and subnet mask to be used with this controller.
- The unit name is any name (for example, Room107-IPCP505, Lab1234control, ConfRmSystem) that you want to use to label a specific IPCP 505 unit. The default is a combination of the product name and part of the hardware address. This can be changed to your choice of alphanumeric characters and hyphens (-).
  - Spaces are not permitted within the name of a unit.
  - Underscores (_) are not permitted.
  - Valid characters are A-Z, a-z, 0-9, and - (hyphen).
  - The name cannot start with a number or a hyphen, and it cannot end with a hyphen.
  - Maximum name length is 24 characters.

A Brief Guide to Tabs in Global Configurator

In the upper right side of the GC window are several tabs that divide the program into groups of functions you can view and configure. The left three, **`IP Link Settings`**, **`Schedule`**, and **`Monitor`**, are displayed for all IP Link-enabled products. Tabs to the right of those three vary in quantity, type, and layout, depending on the product and ports being configured. The following figures show tabs that may be available when you configure an IPCP 505.

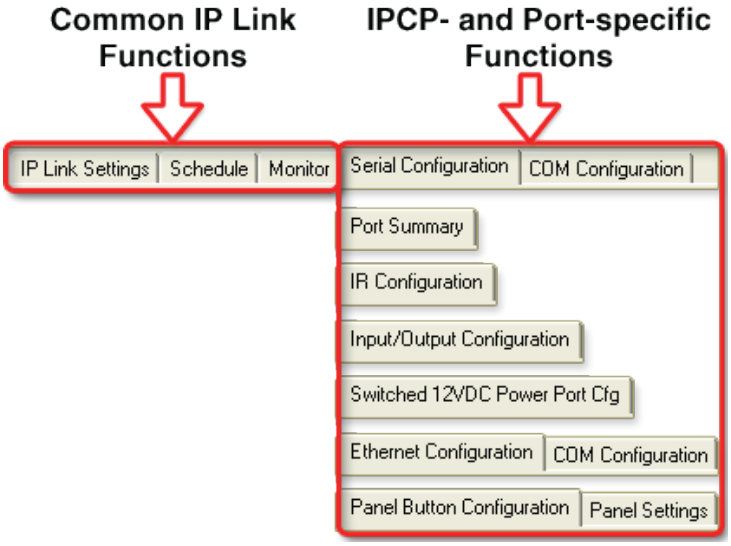

Figure 19. Tabs That May Be Available in Global Configurator

To learn about the functions available on each of these tabs, see the *Global Configurator Help* file. In the contents pane on the left, click on **`Reference Information`**, click **`Global Configurator Window`**, then click on the name of the tab you want to know more about.

Advanced Configuration

IR Learning to Create Customized IR Driver Files

If you do not find a driver on the Extron website for the device you plan to use, you can create your own IR driver file. Extron IR Learner software lets you create a customized driver file of IR commands that can be used with the Global Configurator software for port setup and button configuration. Visit **www.extron.com** to download IR Learner and install it on your PC.

NOTE: The IPCP 505 requires IR Learner version 1.24 or higher.

Once IR Learner is installed on the PC, you can start the program directly by double-clicking the IR Learner icon, shown at right.

Alternatively, you can select **`Run IR Learner`** from the Global Configurator **`Tools`** menu, as shown at right. The IR Learner utility opens in a new window.

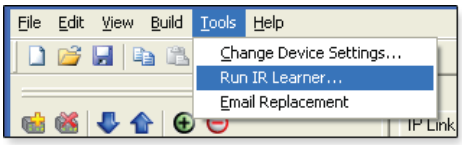

See the *IR Learner Help* file for instructions on how to create the driver file. During IR command capture, hold the IR remote for the device so that it faces the IR learning receiver (on the IPCP front panel) within the angles and distance range shown in the **front panel diagram** on page 9.

Printing a Wiring Block Diagram or a GUI Configuration Report

Once you have configured a system using Global Configurator, you can generate and print a simple block diagram of what products to wire to which of the ports on the IPCP 505. The diagram includes model names and the type of communication (IR or RS-232) configured for each port. For more detailed information, in the *Global Configurator Help* file, read about the **File** menu within the "Reference Information" section.

> **NOTE:** This procedure requires Microsoft Word software (for a block diagram) or an internet browser application (for a GUI configuration report). The installer or user must provide that software. They are not Extron products.

Procedure overview:

1. In Global Configurator, click on the **File** drop-down menu and select **Print** and then **Wiring Diagrams/GUI Configuration Report**.
2. In the Print Wiring Diagrams/GUI Configuration Report window, select the devices to include in the diagram.
3. Click the **Print Wiring Diagrams** button or the **Print GUI Report** button. GC processes the information about the selected device(s), generates a document containing the wiring diagram or report, and opens that document in Word (for the diagram) or in a browser window (for the GUI report).

   To see an example of a wiring diagram, click **here** to open the Attachments area to the left of this page, then double-click on the name of the attached PDF file. The file opens in a new window.
4. Print the diagram(s) and, if desired, save the file(s). Exit Word or the browser.
5. Close the Global Configurator Print Wiring Diagrams/GUI Configuration Report window.

Updating Firmware

If the need arises, you can replace the firmware of the IPCP without opening the unit or changing firmware chips. See the **Firmware Updates** section starting on page 78 for instructions on how to update the firmware for the controller.

> **NOTE:** Save the existing GC configuration project before replacing the firmware.

Advanced Serial Port Control

If serial setup configurations are required, the following options provide more advanced methods for serial configuration within the IPCP:

- **Serial pass-through** (or redirect mode) (page 32) — to pass a control signal in one serial port on the IPCP and out through another serial port on the same IPCP
- **Direct port access** (page 32) — to pass a control signal through a Telnet connection on the IPCP to an AV device connected to an IPCP serial port
- **Serial bridging** (page 33) — to pass a control signal into a serial port on an originating IPCP (or IPL) through a network and out a specified serial port of a destination IPCP (or IPL) to a connected AV device

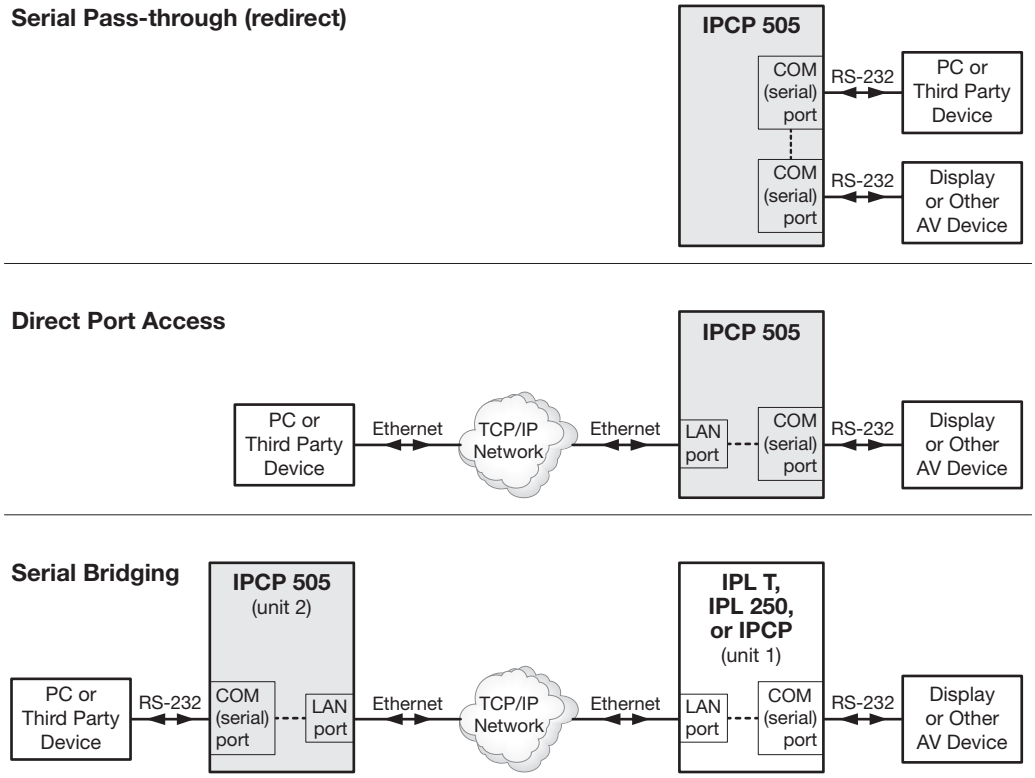

Figure 20. Methods of Advanced Serial Port Control

Serial pass-through (redirect mode)

Serial pass-through allows serial commands from a controller to “pass through” an IPCP 505 on route to an AV device. Any serial port on an IPCP can be configured as a pass-through connection to another serial port on the same device. For example, an RS-232 control device connected to the COM1 port on an IPCP 505 could control a projector connected to the COM2 port. COM1 passes through (redirects) the serial signal to COM2 in that example.

Serial pass-through is enabled or disabled through the COM Configuration tab within Global Configurator, as shown below and as described in the GC help file.

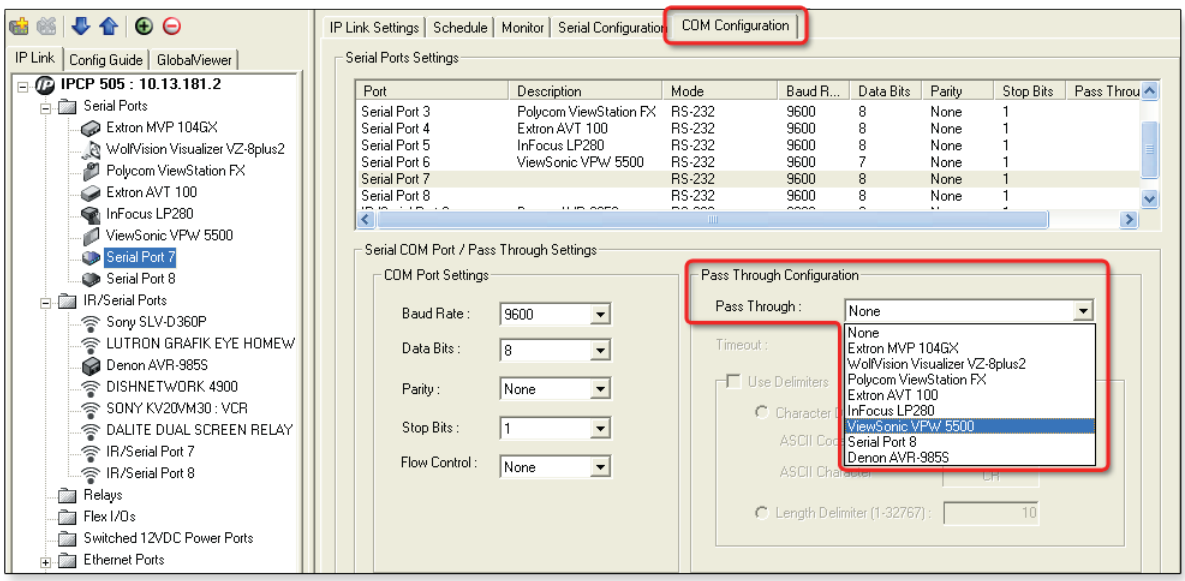

Figure 21. A Global Configurator Screen Showing Serial Pass-Through Configuration

Advanced users can use the pass-through SIS command as well (see the Simple Instruction Set **CD commands** on page 59 for detailed command descriptions).

Direct port access (ports 2001 through 2016)

Direct port access allows a direct, one-to-one connection to any one of the IPCP serial ports using a TCP/IP connection. When a TCP session is initiated to a COM port, all data sent and received passes directly to and from that port without any processing. Set serial port parameters (baud rate, parity, data bits, stop bits) within the IPCP prior to using direct access.

NOTES: The reserved TCP port numbers (2001-2016) are assigned by default as follows:

Bidirectional ports:		Unidirectional ports:	
2001 = COM1	2005 = COM5	2009 = IR/Serial 1	2013 = IR/Serial 5
2002 = COM2	2006 = COM6	2010 = IR/Serial 2	2014 = IR/Serial 6
2003 = COM3	2007 = COM7	2011 = IR/Serial 3	2015 = IR/Serial 7
2004 = COM4	2008 = COM8	2012 = IR/Serial 4	2016 = IR/Serial 8

You can use **SIS commands** (see page 68) to assign a different range of port numbers to these ports, if needed.

An IR/serial port must be configured for serial communication to be used for direct port access.

To initiate direct port access using Extron DataViewer software:

1. Connect the IPCP 505 to a network.
2. If necessary, use GC (see the help file for details), the **Port Settings** embedded web page (see page 40), or **SIS commands** (see page 58) to set serial port parameters (baud rate, parity, stop bits) for the IPCP 505 COM port to be used.
3. Launch the DataViewer program.
4. Click **File** > **Connect** to open the Communication Setup dialog box.
5. Click the **TCP/IP** tab.
6. Complete the fields with the IP address of the IPCP 505 and the TCP/IP port number (2001, 2002, 2003,...) of the COM port (on that same IPCP unit) that will be used, as shown below.

NOTE: A password is not required for direct port access.

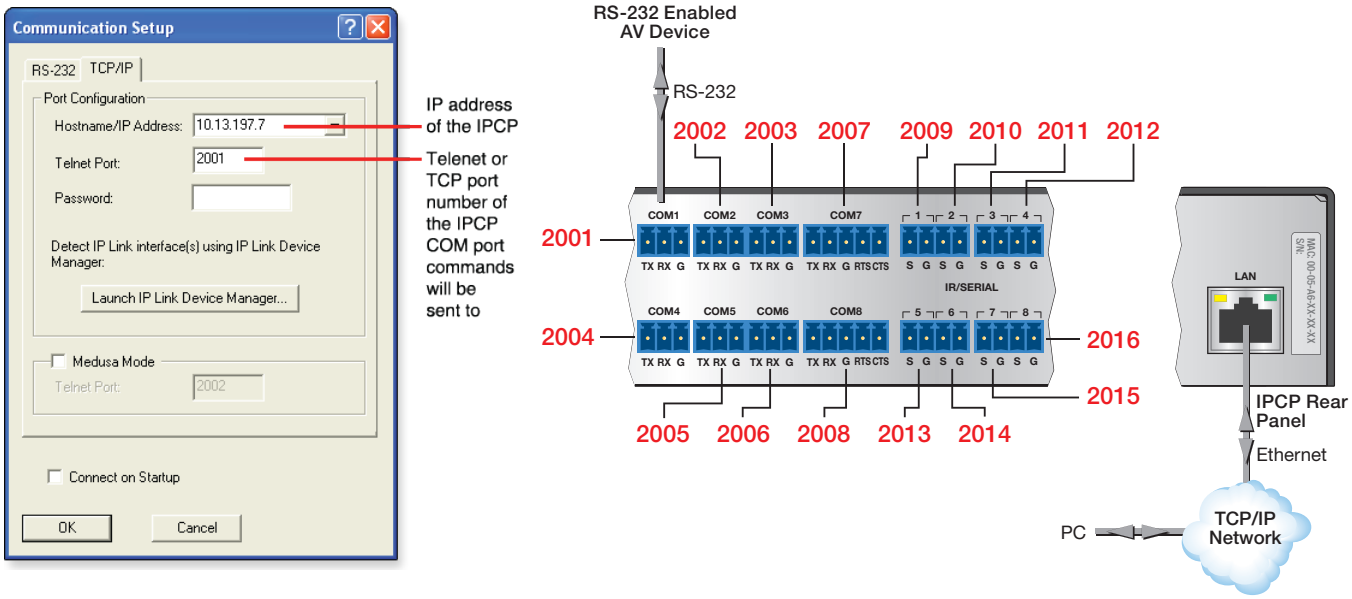

Figure 22. DataViewer Communication Setup Dialog Box and Direct Access Wiring

7. Click **OK**. The DataViewer commands window opens.
8. Type SIS commands into the Commands area of the window to send those commands directly to the attached AV device through the selected COM port.
9. To end the direct access session, close DataViewer.

Serial bridging

Serial bridging mode creates a virtual serial connection (a “bridge”) between two IPCP or IPL units (or an IPCP and an IPL unit). This allows serial data to be passed over a shared LAN to devices connected via the COM ports on the IPCP. To use serial bridging, two IPCP or IPL devices (one local and one remote) must be enabled to communicate with each other, establishing PC, touchpanel, or controller access to a remote AV device.

Hardware connection

To set up the hardware for serial bridging:

1. Verify that the protocol (baud rate, data bits, stop bits, parity) is identical for both serial ports that will be “bridged” (one port on each IPCP or IPL unit).
2. For unit 1 (the remote IPCP or IPL device), connect a serial cable to an AV device such as a display or projector (see figure 23, ①).
3. Connect that same remote IPCP or IPL (unit 1) to the LAN (see ②).

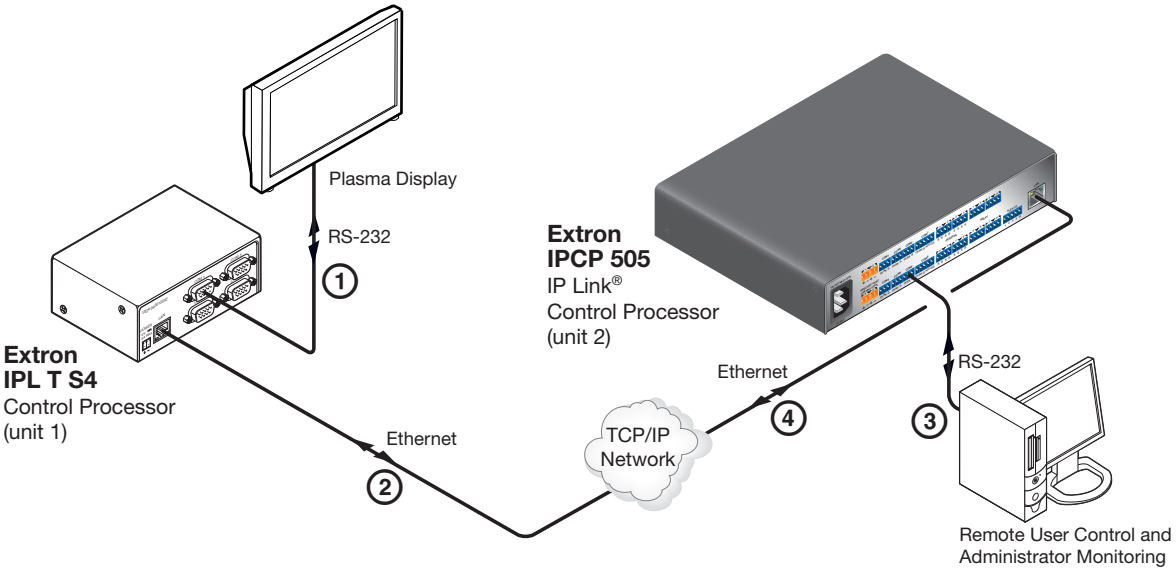

Figure 23. Connections for Serial Bridging

4. For unit 2 (the local IPCP or IPL device), make a serial connection to the PC or controller that is to control the remote AV device (see ③).
5. Connect the local IPCP or IPL device (unit 2) to the same network (see ④).

You are now ready to configure unit 2 (the local IPCP or IPL device) for serial bridging mode.

Serial bridge configuration

To allow both units to communicate together, you must configure unit 2 to communicate with unit 1.

NOTE: If a serial (RS-232) driver was previously loaded (via Global Configurator) onto the IPCP unit, serial bridging disables it.

To configure unit 2:

1. Enter the IP address of unit 2 in the Internet browser **`Address`** field at the top of the screen, and press the <Enter> key. The System Status page opens, showing the current IP and serial port settings of unit 2.

2. Access the web server port setting screen by clicking the **`Configuration`** tab, then the **`Port Settings`** link on the left side of the window (see figure 24, ①). The Port Settings page appears, as shown in figure 24.

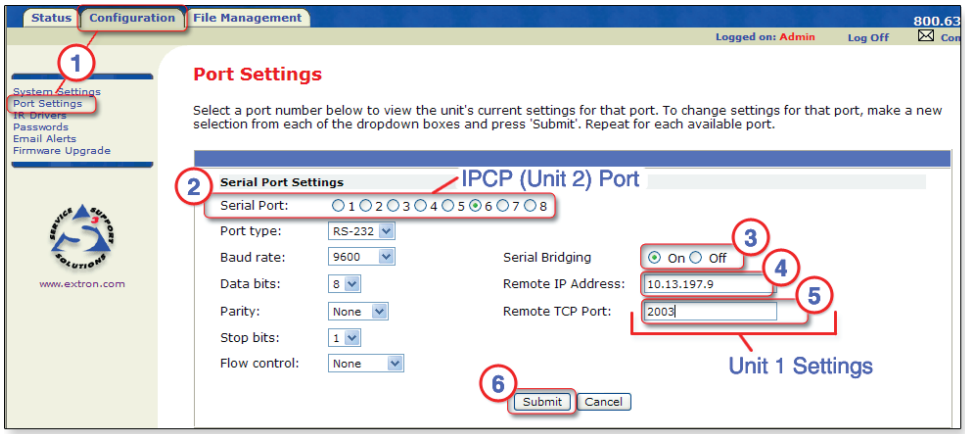

Figure 24. Port Settings Internal Web Page for Unit 2

3. Choose the serial port (on the local IPCP 505, unit 2) that you wish to communicate through (see figure 24, ③).

4. For serial bridging, click the **`On`** radio button to activate bridging mode (see ④).

5. In the **`Remote IP Address`** field, type in the IP address of unit 1 (the remote device) (see ⑤).

6. In the **`Remote TCP Port`** field, type in the number of the serial port number on unit 1 for this virtual connection (see ⑥).

   - For an IPCP 505, choose a port number from 2001 (COM1) - 2016 (IR/serial port 8), as noted on page **32** in the direct port access section of this guide.
   - For an IPL 250 or IPL T S Series control processor, choose from 2001 (COM1) - 2006 (COM6), based on the available COM ports. See the diagram below (figure 25).

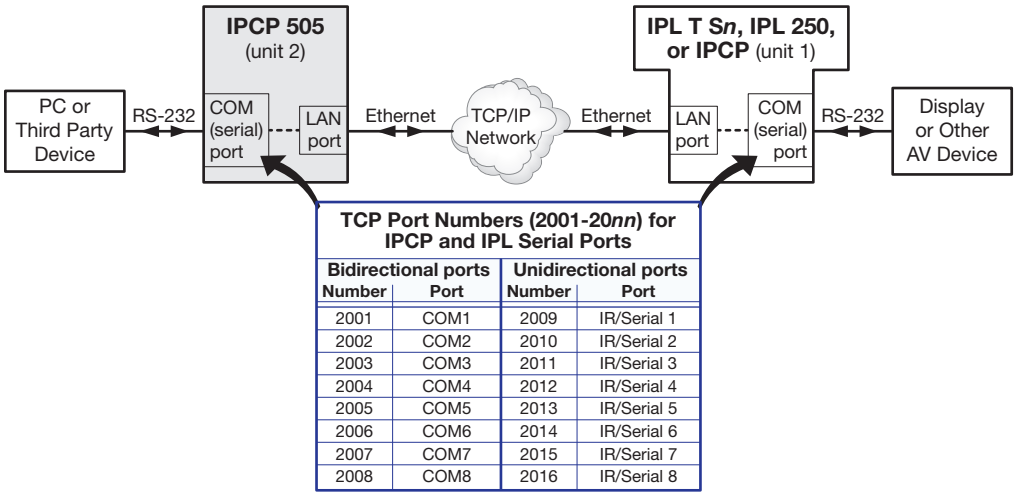

TCP Port Numbers (2001-20*nn*) for IPCP and IPL Serial Ports

Bidirectional ports		Unidirectional ports	
Number	Port	Number	Port
2001	COM1	2009	IR/Serial 1
2002	COM2	2010	IR/Serial 2
2003	COM3	2011	IR/Serial 3
2004	COM4	2012	IR/Serial 4
2005	COM5	2013	IR/Serial 5
2006	COM6	2014	IR/Serial 6
2007	COM7	2015	IR/Serial 7
2008	COM8	2016	IR/Serial 8

Figure 25. Serial Bridging System Diagram and Port Numbers

7. Click the **`Submit`** button (see figure 24, ⑥). The AV device attached to remote unit 1 should now accept all serial commands from your PC, touchpanel, or controller.

Saving and Uploading the Configuration

This is not an advanced configuration function, but when you finish creating the configuration in Global Configurator, you must save the GC project and upload the configuration to one or more IPCP 505 units (see the *Global Configurator Help* file for instructions).

Controlling an IPCP 505

You can control the IPCP and devices connected to it by using a shared network and one or more of the following tools:

- The factory-embedded web pages within the IPCP
- The GlobalViewer (GV) web pages that are created when you upload the GC configuration to the IPCP
- A TouchLink touchpanel with a customized graphical user interface (GUI), provided that the TouchLink is included in the IPCP 505 configuration

Embedded Web Pages

The IPCP 505 features an embedded web server, which includes factory-set web pages. These pages can be replaced with user-designed files, but the default web pages provide many basic features for monitoring, configuring, and controlling the unit via a web browser. This section provides an overview of these web pages, which provide some of the features of the configuration program.

To access the embedded web pages,

1. Launch a web browser (Internet Explorer, Mozilla Firefox) on the connected PC, enter the IP address of the IPCP in the address field, and press the <Enter> key.

   NOTE: After GlobalViewer web pages have been uploaded to the IPCP, the GV web pages open by default (instead of the factory-set web pages) if you enter just the IP address (such as *`10.13.197.7`* or *`http://10.13.197.7`*) of the IPCP unit. To view the factory-set web pages on a GV-enabled IPCP unit, add `/nortxe_index.html` after the IP address before pressing <Enter>. For example, enter `http://10.13.197.7/nortxe_index.html`.

2. In the Connect to *`{IP address}`* or Windows Security dialog box, shown at right, enter the IP address of the IPCP or text of your choice in the **`User Name`** field, type in the administrator password in the **`Password`** field, and click **`OK`**. The IPCP default web page appears.

   If the IPCP has not already been configured with a password, this password dialog box does not appear; the default web page opens directly.

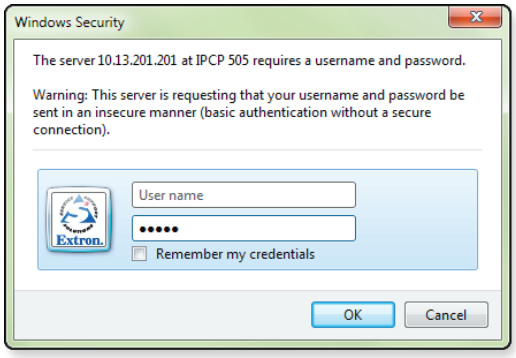

   NOTE: Passwords must contain 4 to 12 alphanumeric characters. Symbols and spaces are not allowed, and the passwords are case sensitive.

   NOTE: Administrators have access to all of the web pages and are able to make changes to settings. Users can access the System Status page only.

Status

The Status web page provides only settings information. Changes must be made via the Configuration web page, the Global Configurator software, or SIS programming. Personnel who have user access can view the Status page but do not have access to configuration pages.

System Status

The System Status page provides information about the IPCP 505 model, part number, firmware version, port and IP settings, as shown in the following example. This information is useful when troubleshooting.

Extron Electronics

Status | Configuration | File Management

800.633.9876

Logged on: Admin Log Off Contact Us

www.extron.com

System Status

Below are your Unit's current system settings.

System Description

Model:	IPCP 505
Description:	(8) Bi-Directional Serial Ports, (8) Unidirectional IR/Serial Ports, (8) Relay Ports, (4) Flex I/O Ports, (4) 12VDC Ports, (1) eBUS Port
Part Number:	60-1071-02
Firmware:	1.01
Date	6/16/2011
Time:	2:28 PM

IP Settings

Unit Name:	SpencerBldg-06-01B-C9
DHCP:	Off
IP Address:	10.13.181.1
Gateway IP Address:	0.0.0.0
Subnet Mask:	255.255.0.0
MAC Address:	00-05-A6-06-1B-C9

Serial Port Settings

Port:	1	Port:	2	Port:	3	Port:	4
Type:	RS-232	Type:	RS-232	Type:	RS-232	Type:	RS-232
Baud Rate:	9600	Baud Rate:	9600	Baud Rate:	14400	Baud Rate:	38400
Data Bits:	8	Data Bits:	8	Data Bits:	8	Data Bits:	8
Parity:	None	Parity:	None	Parity:	None	Parity:	None
Stop Bits:	1	Stop Bits:	1	Stop Bits:	1	Stop Bits:	1
Flow Control:	Software	Flow Control:	None	Flow Control:	None	Flow Control:	None

Port:	5	Port:	6	Port:	7	Port:	8
Type:	RS-232	Type:	RS-232	Type:	RS-232	Type:	RS-232
Baud Rate:	38400	Baud Rate:	9600	Baud Rate:	9600	Baud Rate:	9600
Data Bits:	8	Data Bits:	8	Data Bits:	8	Data Bits:	8
Parity:	None	Parity:	None	Parity:	None	Parity:	None
Stop Bits:	1	Stop Bits:	1	Stop Bits:	1	Stop Bits:	1
Flow Control:	None	Flow Control:	None	Flow Control:	Software	Flow Control:	Hardware

IR/Serial Port Settings

Port:	1	Port:	2	Port:	3	Port:	4
Type:	IR	Type:	RS-232	Type:	IR	Type:	RS-232
		Baud Rate:	9600			Baud Rate:	9600
		Data Bits:	8			Data Bits:	8
		Parity:	None			Parity:	None
		Stop Bits:	1			Stop Bits:	1

Port:	5	Port:	6	Port:	7	Port:	8
Type:	RS-232	Type:	RS-232	Type:	IR	Type:	IR
Baud Rate:	9600	Baud Rate:	9600				
Data Bits:	8	Data Bits:	8				
Parity:	None	Parity:	None				
Stop Bits:	1	Stop Bits:	1				

Flex I/O Port Settings

Port	Mode	Pull-up	Threshold	Lower (0-24V)	Upper (0-24V)	Status
1	Digital Input	☑	☑	10.0	20.0	On
2	Digital Output	☑	☐			On (0V)
3	Digital Input	☑	☑	10.0	20.0	On
4	Digital Input	☑	☑	10.0	20.0	On

Relay Port Settings

Port	Status
1	On
2	Off
3	Off
4	Off
5	Off
6	Off
7	Off
8	Off

12VDC Switching/Grouping

Port	Power	Power Usage	Load Status	Group Number
1	On	17.1 Watts	OK	1
2	On			1
3	Off			2
4	Off			2

Figure 26. A System Status Embedded Web Page

Configuration

There are six Configuration web pages, which only administrators can access:

- System Settings
- Port Settings
- IR Drivers
- Passwords
- Email Alerts
- Firmware Upgrade

System Settings

This page is for IP and date/time setting changes.

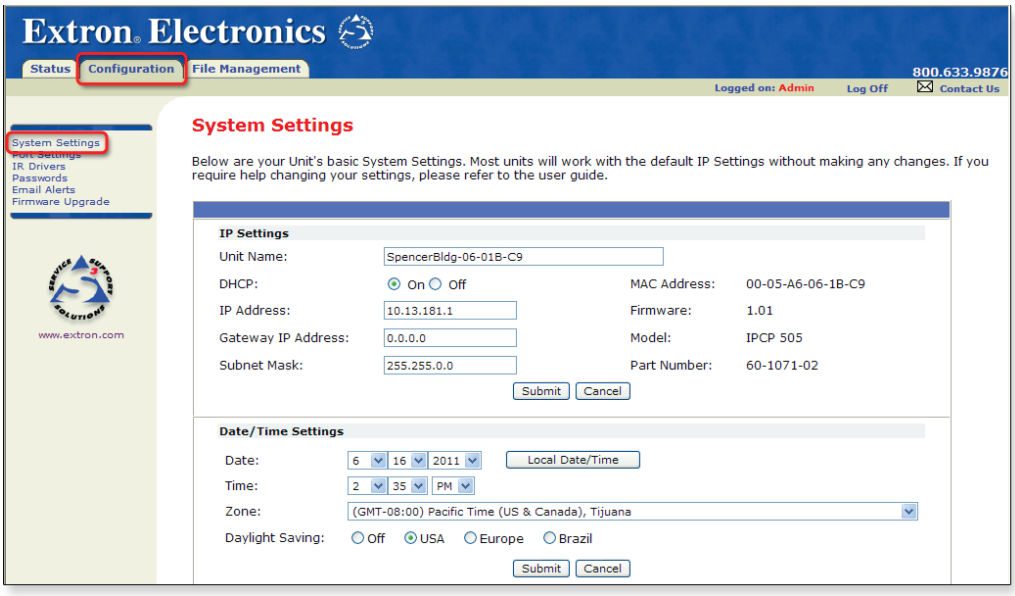

Figure 27. A System Settings Embedded Web Page

NOTE: The unit name can be changed to one of your choice using up to 24 alphanumeric characters and hyphens (-). See **Using Global Configurator: Helpful Tips** on page 28 earlier in this section for examples.

- Spaces ( ) and underscores (_) are not permitted within the name of an IPCP unit.
- Valid characters are A-Z, a-z, 0-9, and - (hyphen).
- The name cannot start with a number or hyphen. It cannot end with a hyphen.

Port Settings

This page allows limited changes to serial (COM) port, IR/serial port, and flex I/O port settings, and to the on/off status of each relay port. It also permits control and grouping of the switched 12 VDC power output ports.

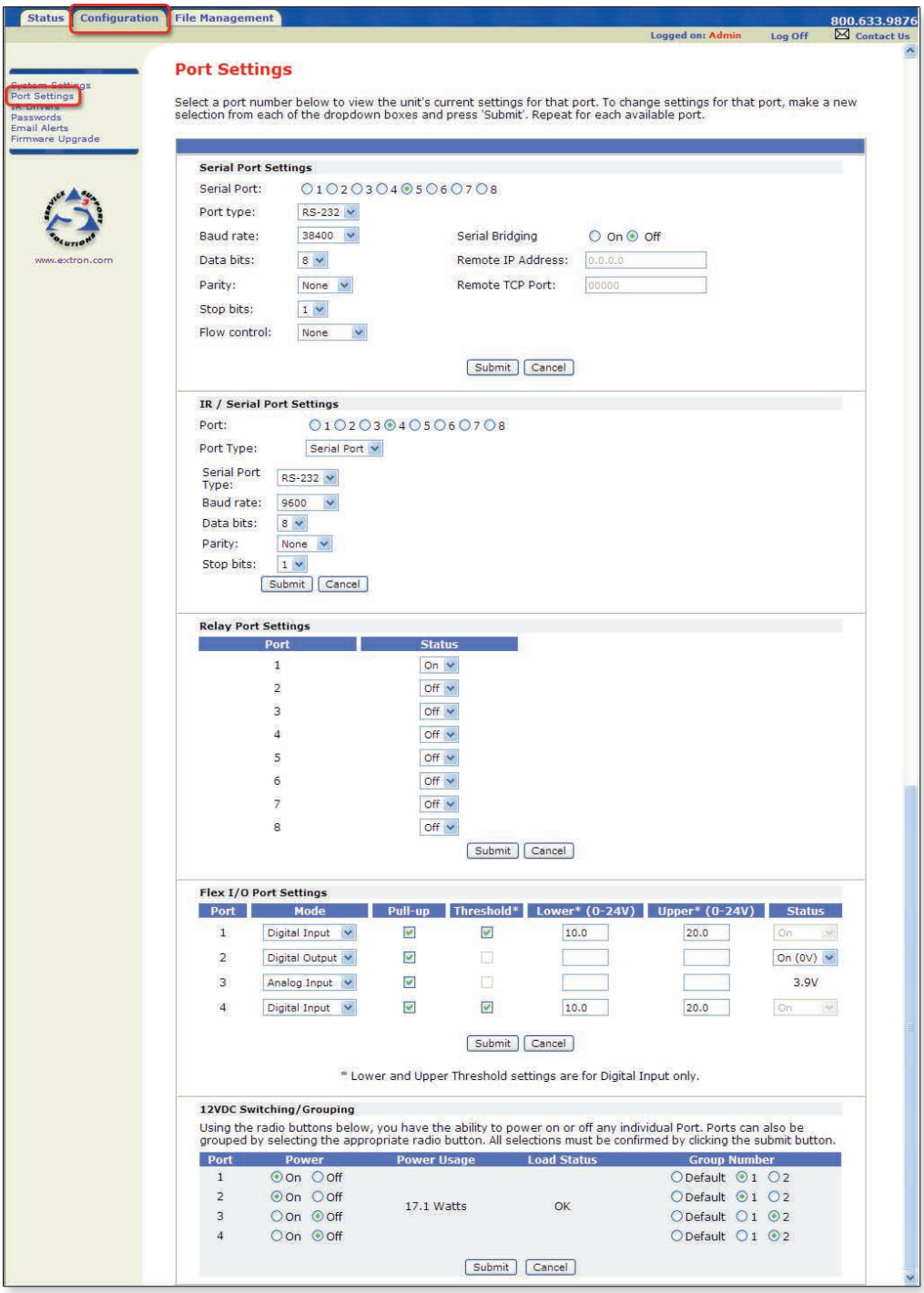

Figure 28. A Port Settings Embedded Web Page

IR Drivers

Once the IPCP 505 is configured and IR drivers have been uploaded to the unit and linked to specific IR ports, you can view a list of the uploaded drivers using this page. Click on the name of the driver file to switch to a view of the commands loaded for that driver. Clicking on a port and then a command name makes the IPCP send that command out its linked IR port to the connected device.

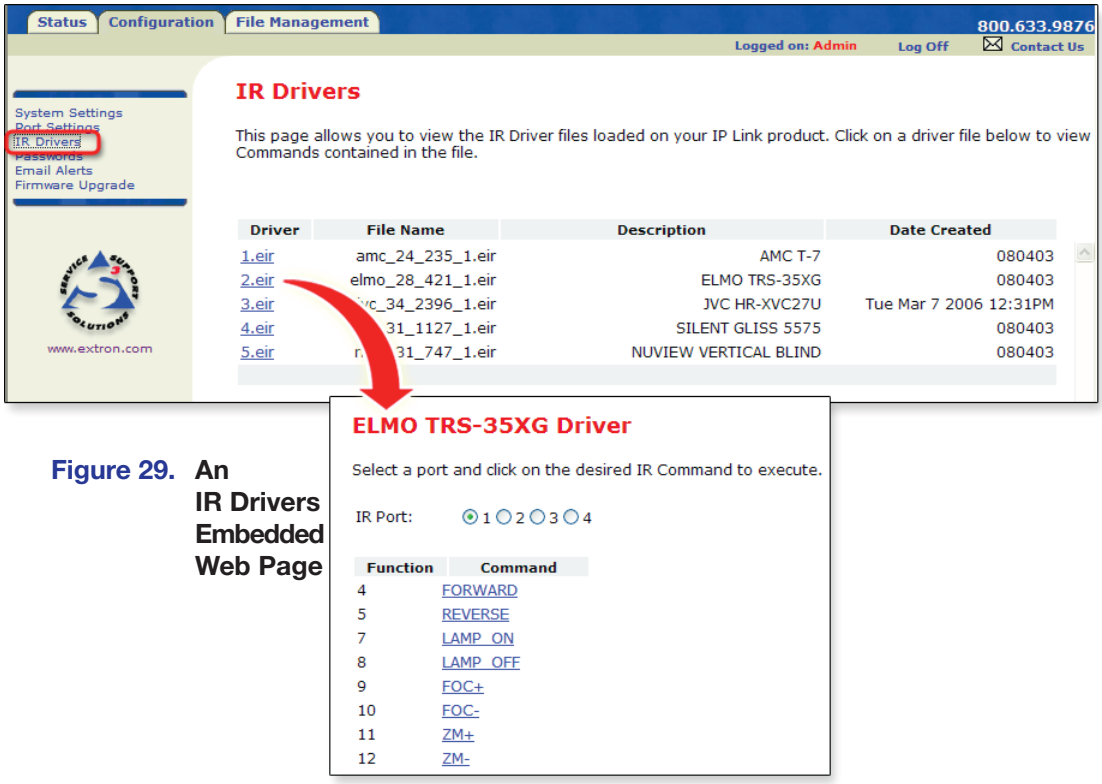

Figure 29. **An IR Drivers Embedded Web Page**

Passwords

In the Passwords page you can change the administrator and/or user passwords.

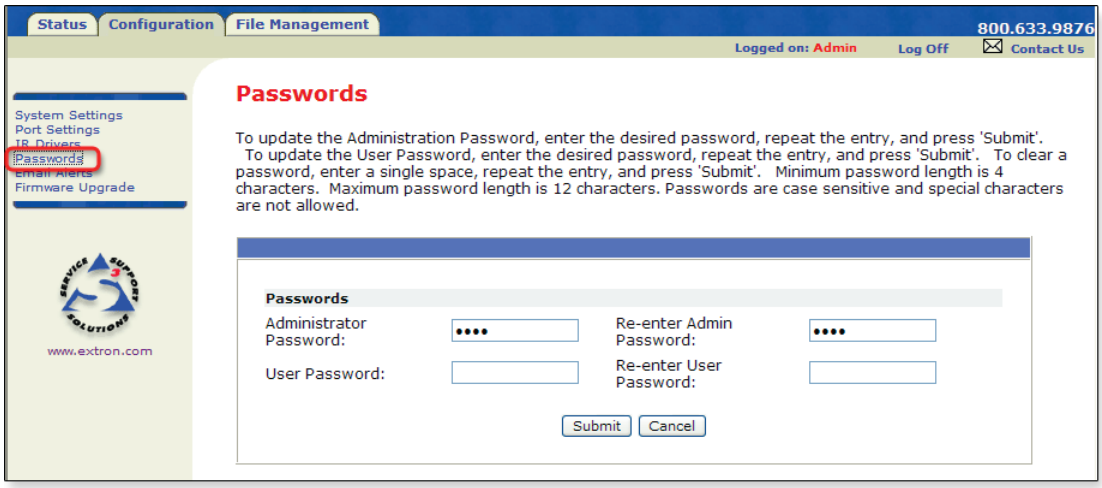

Figure 30. **A Passwords Embedded Web Page**

NOTES:

- Passwords must contain 4 to 12 alphanumeric characters. Symbols and spaces are not allowed, and the passwords are case sensitive. A minimum of four characters are required when creating passwords via the web pages.
- A user password cannot be assigned if an administrator password does not exist.
- If the administrator password is cleared, the user password is also cleared.

Email Alerts

In this page you can specify the IP address and domain name of the web server, set up SMTP verification credentials, and specify the addresses of e-mail alert recipients and which e-mail file they will be sent.

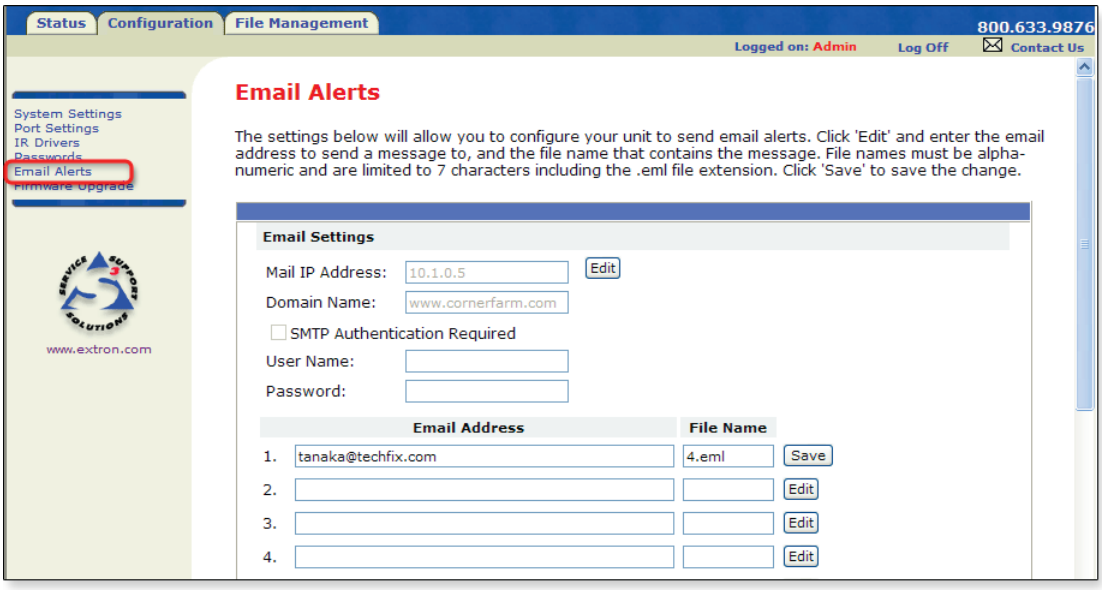

Figure 31. An Email Alerts Embedded Web Page

Firmware Upgrade

Through this page you can locate and load new firmware to the unit.

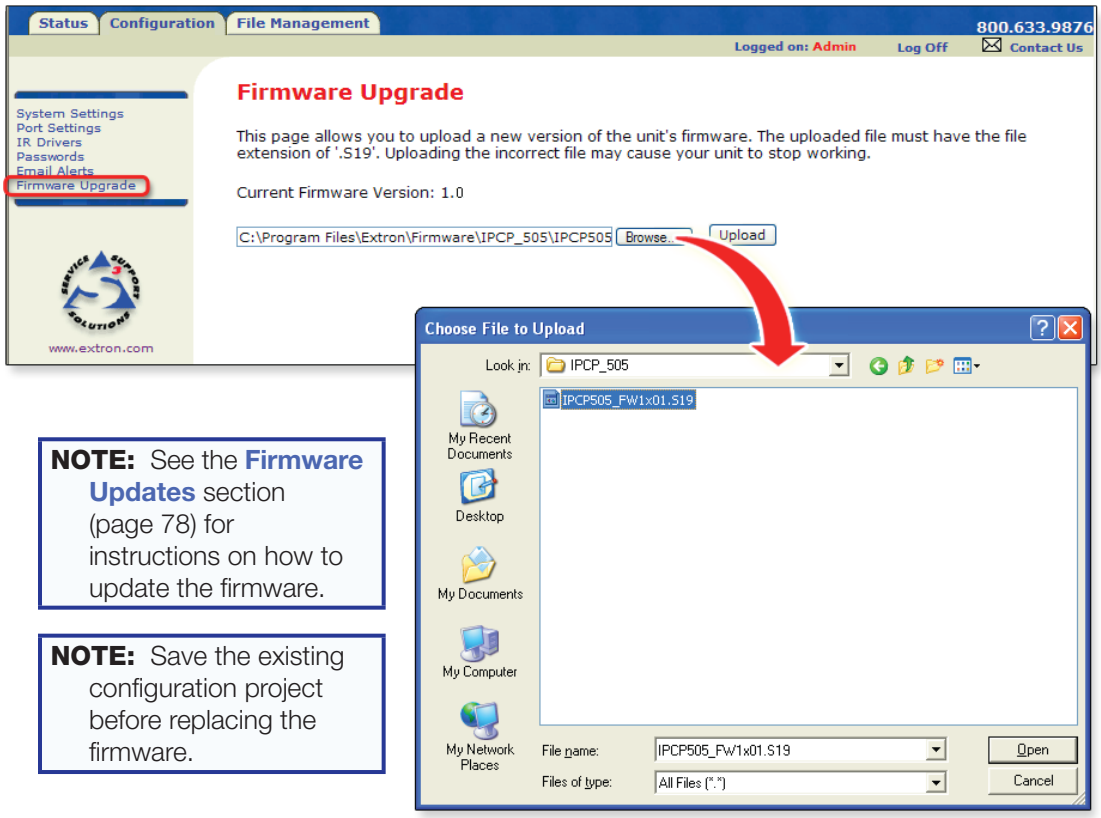

NOTE: See the **Firmware Updates** section (page 78) for instructions on how to update the firmware.

NOTE: Save the existing configuration project before replacing the firmware.

Figure 32. A Firmware Upgrade Embedded Web Page

File Management

This web page allows you to sort by file type (see the **`Filter by File Extension`** drop-down box). Personnel with administrator access can view these pages and make changes. Those with user-level privileges are not able to see this page. For an explanation of file types see **File Types: a Key to Extron-specific File Names** on page 77.

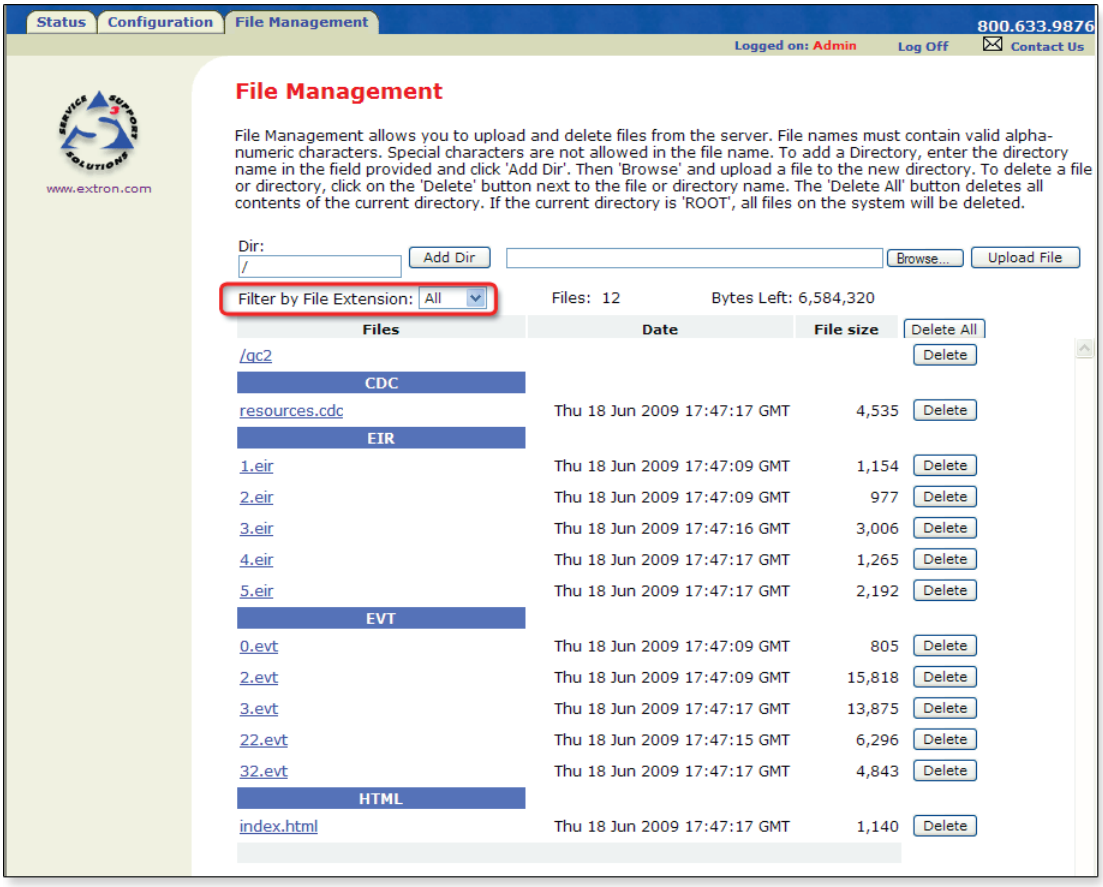

Figure 33. A Typical File Management Page with Filtering by File Extension

ATTENTION: Files with the .cdc extension (___`.cdc` files) should NOT be deleted.

ATTENTION: Potential for product malfunction. Event files (__`.evt`) should NOT be deleted. They are necessary for operation of the controller. Never delete the main event file (`Ø.evt`).

You can also view files in subfolders, including those containing GlobalViewer files if they have been installed on the IPCP 505. The following screen view shows an example of the file management page for subfolders.

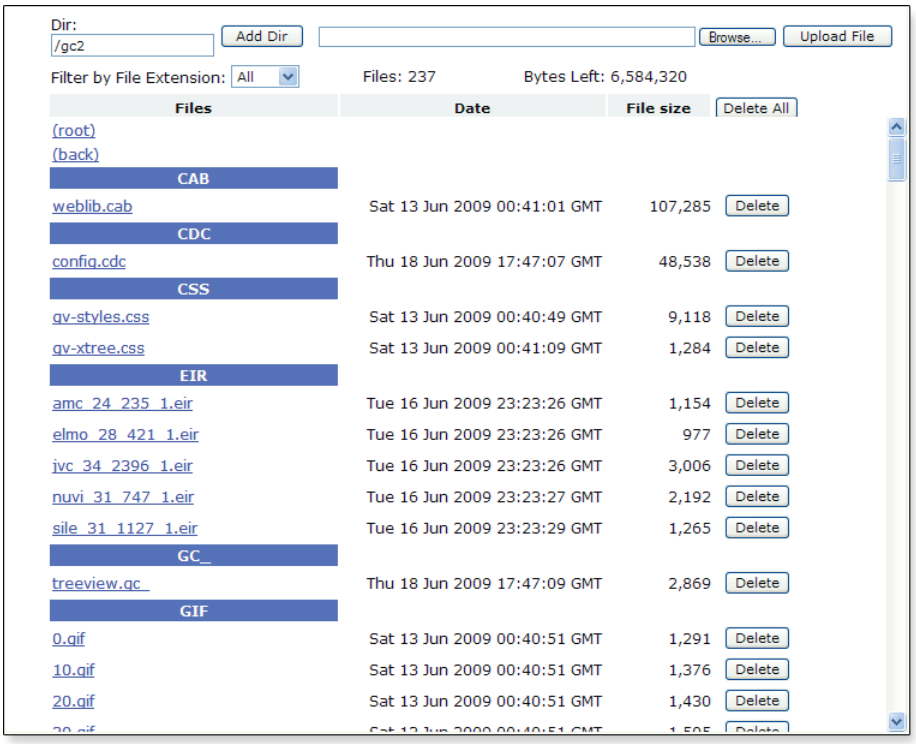

Figure 34. A File Management Page For a Subfolder

GlobalViewer Web Pages

Once an IPCP 505 (or other IP Link-based device) is configured using Global Configurator, GC generates the web browser-based GlobalViewer (GV) application for that unit. Once uploaded to the IPCP, the GlobalViewer web pages allow the user to manage, monitor, and control the IPCP and the devices connected to it.

NOTE: To work with GlobalViewer web pages, you must use Microsoft Internet Explorer version 6.0 or higher with ActiveX enabled.

See the *Global Configurator Help* file for specific information on how to use the software and perform basic setup tasks.

NOTE: If the IPCP has been configured with passwords, the GlobalViewer web pages are password protected. Although default embedded web pages are accessible via the GlobalViewer web pages, non-administrators (personnel with only user access) are able to access only the Status default web page and some GlobalViewer Control pages.

Four screens for the IPCP are available via Global Viewer: Control, Monitor, Schedule, and Info (

). Screens such as Monitor and Schedule appear only for ports and controlled devices that have been included in specific monitors or schedules that can be set up using GC. The Info screen appears for the overall system, not for specific connected devices.

Read the *Global Configurator Help* file for details about each screen and how to use the GlobalViewer pages.

The following figures are examples of IPCP 505 GlobalViewer pages.

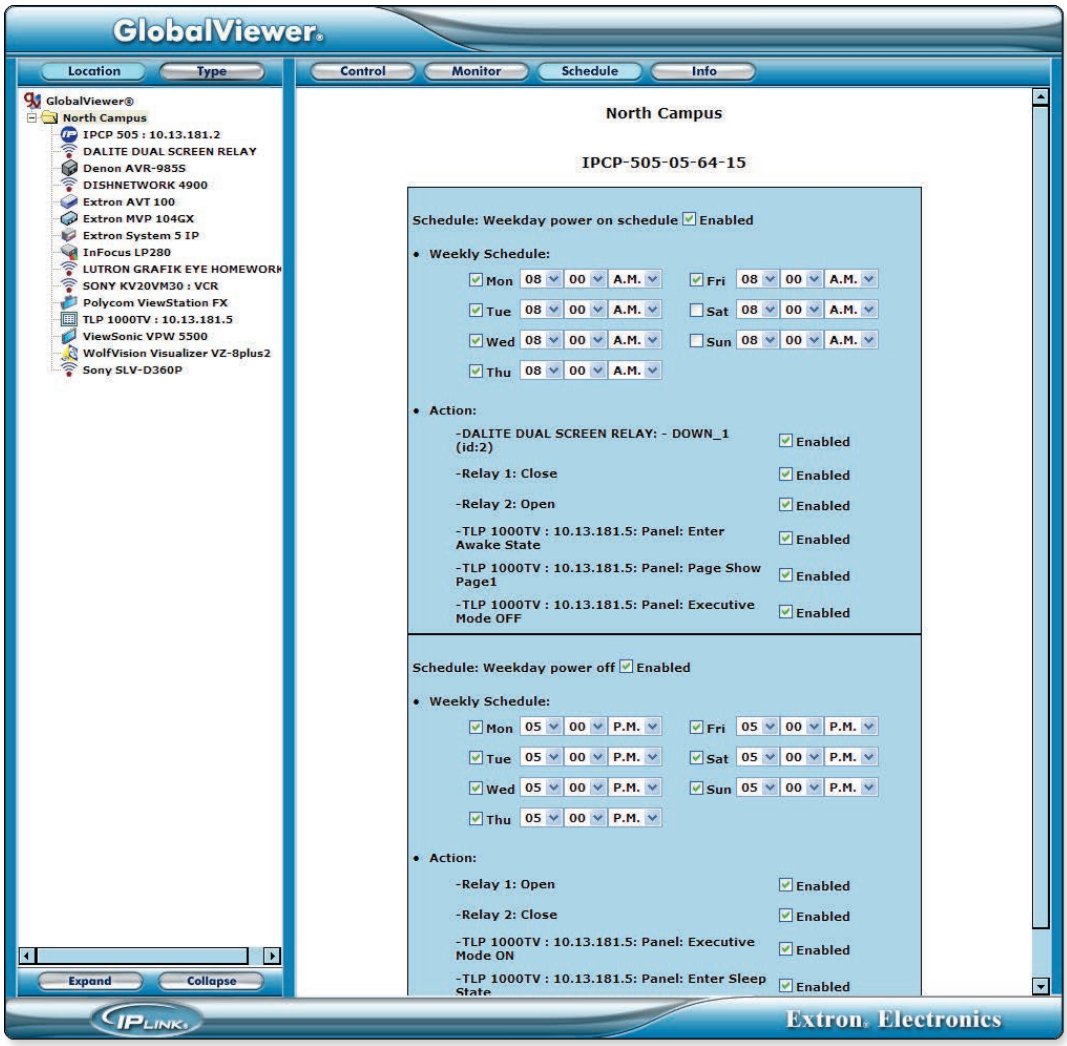

Figure 35. A GlobalViewer Schedule Page

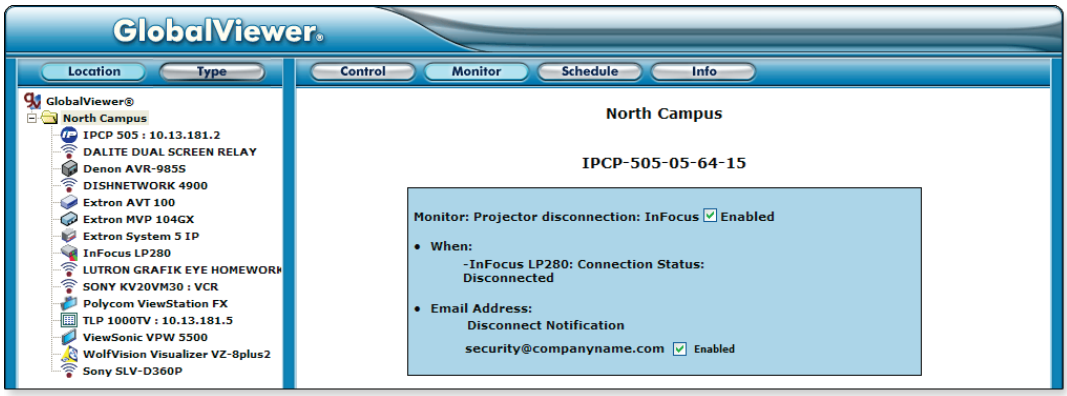

Figure 36. A GlobalViewer Monitor Page

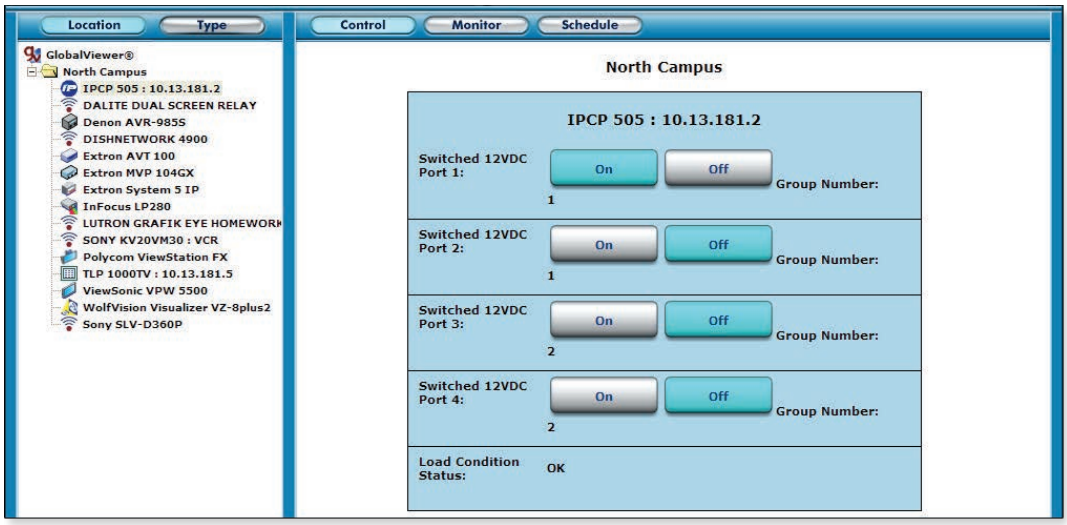

Figure 37. An IPCP-specific GV Control Page for Switched Power Output Ports

If a device has been set up with control drivers, click on the name of the system or on the name of the device on the left side of the GlobalViewer window to open a Control page that shows the available commands for all of the controlled devices or for that one specific device. The following figure shows an example.

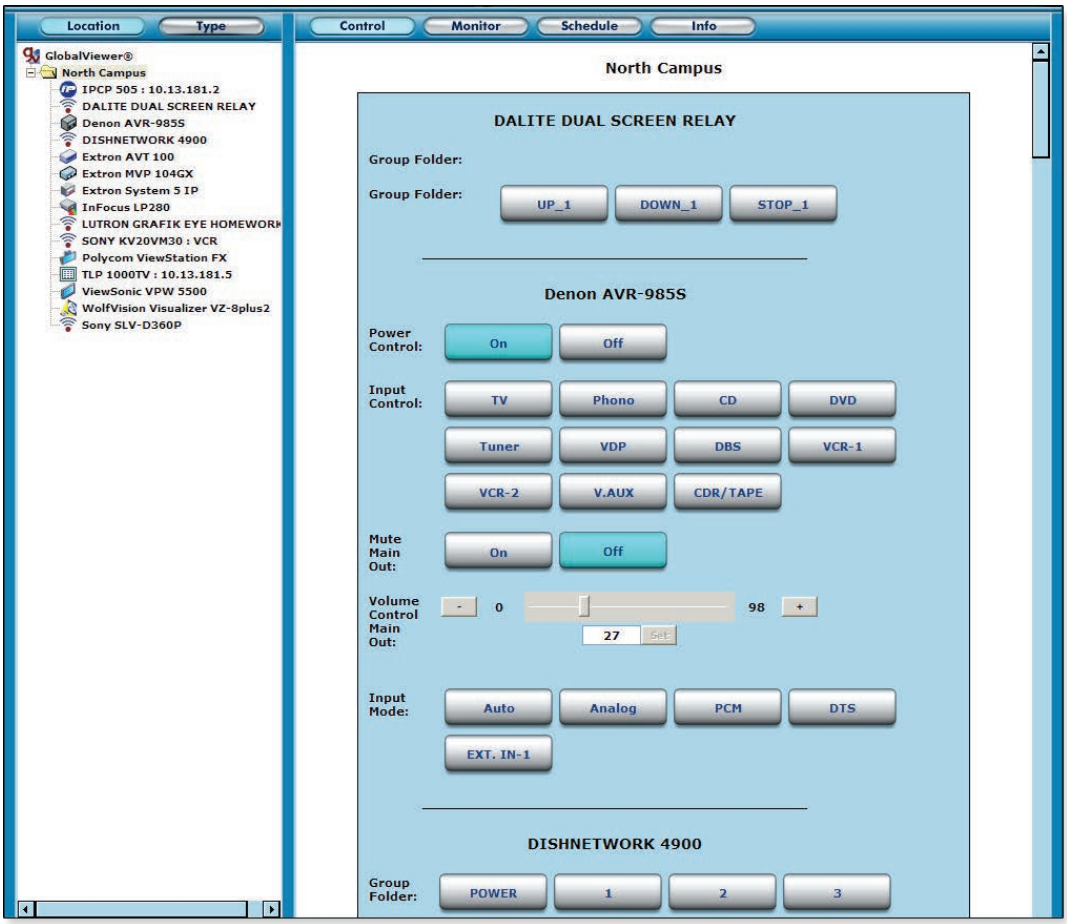

Figure 38. A GlobalViewer Overall System Device Control Page

You can click the GlobalViewer on-screen buttons in the Control pages to send the corresponding command from the IPCP to that device.

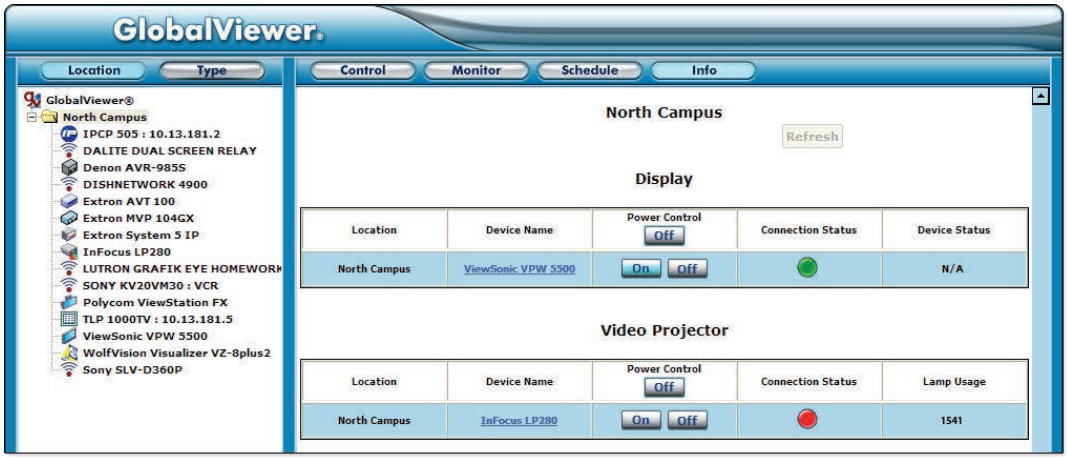

Figure 39. **A GlobalViewer Info Page**

Controlling the IPCP 505 with a Touchpanel

After both devices are configured, the IPCP 505 can be controlled with an optional Extron TLP touchpanel.

1. Set up the graphical user interface (GUI) for each touchpanel by using the GUI Configurator software. See the *GUI Configurator Help* file for details.
2. Connect the touchpanel(s) to the same network that the IPCP 505 uses.
3. While configuring the IPCP using Global Configurator, add each TLP to the Touchpanel ports. Connect to the TLPs and upload the GUI layout for each panel (see the *Global Configurator Help* file for the procedure).

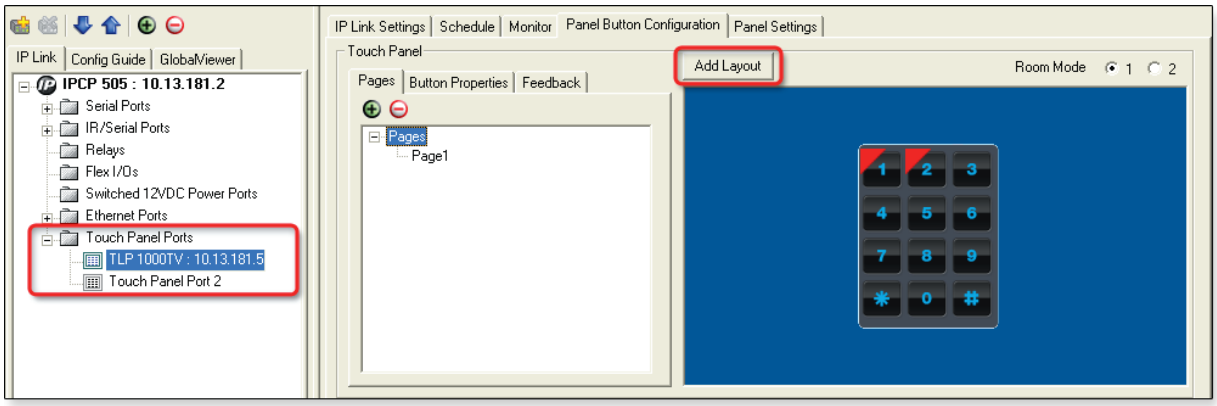

Figure 40. **A GC Panel Button Configuration Page Example**

4. Use GC to configure the on-screen and (if applicable) hardware buttons for the panel.
5. Upload the configuration to the IPCP.
6. Test the system by pressing the buttons on the touchpanel (or pressing/clicking the touchpanel virtual buttons in the GlobalViewer web page of the IPCP 505) and observing how the IPCP and the other devices in the system react.
   - If everything works as it is supposed to, you may disconnect the PC or laptop from the IPCP or the network and use just the touchpanels to control the IPCP.
   - If the system components do not respond properly when you test the touchpanel, check and adjust the configuration of the IPCP using GC, then upload the revised configuration.

Customizing the IPCP Control Web Pages

Extron offers web page templates that can be customized using standard HTML editing tools or third-party software such as Microsoft® FrontPage or Adobe® Dreamweaver® to provide a different interface to the user while still using GlobalViewer functions. An experienced web developer can add images, modify text, and change background colors to create a look and feel that reflects your brand or specific requirements of the user. For example, a university with dozens of devices and rooms to control may wish to create customized web pages with the school colors and logo of the university. End users can control the system using these customized pages instead of the standard GV pages.

Alternatively, Extron can create a customized GUI for you to upload to each IPCP 505 in the system. End users can view the web pages of this customized GUI while administrators and installers still have access to the factory-set web pages and the standard GV web pages in addition to the customized ones.

For a small, one-time fee, Extron will turn the following items into files ready to upload to the unit:

- Your GlobalViewer project file containing system configuration details
- Your choice of available color schemes
- Your choice of labels for panel buttons
- A company or institution logo

Visit the Extron website (**http://www.extron.com/product/customgui.aspx**) or contact an Extron customer support representative for more information on this service and on available template options.

Troubleshooting

Turn on the input devices (DVD players, VCRs, PCs, and other sources), output devices (display screens, projectors), the IPCP 505, and the PC and touchpanel. Touch a configured button on the touchpanel or (via PC) click a control button on the IPCP embedded Control web pages.

If an input or output AV device cannot be remotely controlled (does not respond as expected), check the following:

Power Connections

- Ensure that all devices are plugged in.
- Make sure that each device is receiving power. The IPCP front panel Power LED lights if the device is receiving power.

Data Connections

1. Check the **cabling connections** and make adjustments as needed. The Link LEDs on the IPCP and on the touchpanel or PC should be lit solid green if a network connection is detected. If these LEDs are not lit, either the cable is faulty or not plugged in, or the wrong type of cable is being used (see page 13 in "Hardware Features and Installation").
2. Try to "ping" the unit by entering `ping 192.168.254.254` at the command prompt, or use the IP or web address provided to you by your system administrator. If you get no response:
   - Make sure your unit is using the appropriate subnet mask (check with your system administrator).
   - Make sure your PC and network do not have a software firewall program that might block the IP address of the IPCP unit.
3. If contact is established with the unit, but the IPCP web pages cannot be accessed by your web browser, verify (via an Internet network options or preferences menu) that your web browser is configured for direct network connection and is not set up to use a proxy server.

Device Control Connections and Configuration

- Verify that ports are wired correctly and that ground (earthing) wires are connected to the proper pins on the IPCP and, if applicable, on the controlled device.
- Ensure that each IR emitter head is placed adjacent to or directly over the IR pickup window on the controlled device.
- Verify that the appropriate drivers were used while creating the GC configuration file and that the correct commands and signal types (IR or RS-232) are associated with the correct ports on the IPCP and on the other devices.

If you are still experiencing problems, call the **Extron S3 Sales & Technical Support Hotline** or the **Extron S3 Control Systems Support Hotline**.

SIS Programming and Control

This section covers the following topics:

- **Host-to-IPCP Communications**
- **Commands and Responses**

The IPCP 505 can be remotely controlled via a host computer, touchpanel, or other device (such as a control system) attached to a shared network.

The IPCP must be configured before use. As shipped, the controller/processor cannot control any other devices or interact with a touchpanel until it has been configured. Set up the IPCP or control it by using Simple Instruction Set (SIS) commands or Global Configurator software (version 3.2 or higher) via an Ethernet LAN connection. See page 13 in the "Hardware Features and Installation" section for **pin assignments and protocol**. For information on the software and the embedded web pages, see **Software-based Configuration and Control** starting on page 18 and see the help files for the software.

IPCP 505 LAN port defaults:

- **IP address:** 192.168.254.254
- **Gateway IP address:** 0.0.0.0
- **Subnet mask:** 255.255.0.0
- **DHCP:** off

Host-to-IPCP Communications

SIS commands consist of one or more characters per field. No special characters are required to begin or end a command sequence. When the IPCP determines that a command is valid, it executes the command and sends a response to the host device. All responses from the IPCP to the host end with a carriage return and a line feed (CR/LF = ↵), which signals the end of the response character string. A string is one or more characters.

IPCP 505-initiated Messages

If you are communicating with the IPCP via a **verbose** Telnet connection, when a local event such as a selection via a touchpanel takes place, the IPCP responds by sending a message to the host. No response is required from the host. The IPCP-initiated messages are listed here.

```
(c) Copyright 2Ø13, Extron Electronics, IPCP 5Ø5, Vx.xx, 6Ø-1Ø71-Ø2↵
Day, DD MMM YYYY HH:MM:SS↵
```

Vx.xx is the firmware version number.

Example:

```
(c) Copyright 2Ø13, Extron Electronics, IPCP 5Ø5, V1.Ø3, 6Ø-1Ø71-Ø2
Mon, 15 Jul 2Ø13 1Ø:49:12
```

The IPCP 505 sends the boot and copyright messages when you first open a Telnet connection to the IPCP. The day of the week, date, and time are displayed if the unit is connected via Telnet. If you use a Telnet connection, the copyright message, date, and time may be followed by a password prompt.

Additional messages may be sent by the IPCP in response to changes made through the touchpanel and when scripts are executed during scheduled events.

Password Information

The "↵`Password:`" prompt requires a password (administrator level or user level) followed by a carriage return. The prompt is repeated if the correct password is not entered.

If the correct password is entered, the unit responds with "↵`Login Administrator`↵", "******↵`Login Administrator`↵", or "↵`Login User`↵", depending on the password entered. If passwords are the same for both administrator and user, the unit defaults to administrator privileges.

Error Responses

When the IPCP 505 receives a valid SIS command, it executes the command and sends a response to the host device. If the IPCP is unable to execute the command because the command is invalid or it contains invalid parameters, it returns an error response to the host.

The error response codes and their descriptions are as follows:

E10 – Invalid command
E12 – Invalid port number
E13 – Invalid value (the number is out of range/too large) or parameter
E14 – Not valid for this configuration
E22 – Busy
E24 – Privilege violation
E25 – Device is not present
E26 – Maximum number of connections has been exceeded
E27 – Invalid event number
E28 – Bad filename or file not found
E31 – Attempt to break port pass-through when not set (A user or software attempted to disable the port redirect feature when it was not already set or active.)

Error Response References

The following superscripted numbers are used within the command descriptions on the following pages to identify commands that may respond as shown:

[14] = Commands that yield an E14 (not valid for this configuration) response if the current configuration of the unit does not support that command.

[22] = Commands that yield an E22 (busy) response.

[24] = Commands that yield an E24 (privilege violation) response if you are not logged in at the administrator level.

[27] = Commands that may yield an E27 (invalid event number) response.

[28] = Commands that may yield an E28 (file not found) response.

Commands and Responses

Using the Command/Response Tables

The IPCP 505 can be controlled via a Telnet (port 23) connection using ASCII commands, or via a web browser (port 80) connection using URL-encoded commands. The ASCII and URL commands listed in the **tables** starting on page 57 perform the same functions, but they are encoded differently to accommodate the requirements of each port (Telnet or browser).

The ASCII to hexadecimal (HEX) conversion table shown here is for use with the command/response tables.

The command/response tables list valid ASCII command codes, the corresponding URL (uniform resource locator) encoded (for web browsers) command codes, the responses of the IPCP to the host, and a description of the command's function or the results of executing the command.

Space →

ASCII to Hex Conversion Table															
	2Ø	!	21	"	22	#	23	$	24	%	25	&	26	'	27
(	28	)	29	*	2A	+	2B	,	2C	-	2D	.	2E	/	2F
Ø	3Ø	1	31	2	32	3	33	4	34	5	35	6	36	7	37
8	38	9	39	:	3A	;	3B	<	3C	=	3D	>	3E	?	3F
@	4Ø	A	41	B	42	C	43	D	44	E	45	F	46	G	47
H	48	I	49	J	4A	K	4B	L	4C	M	4D	N	4E	O	4F
P	5Ø	Q	51	R	52	S	53	T	54	U	55	V	56	W	57
X	58	Y	59	Z	5A	[	5B	\	5C	]	5D	^	5E	_	5F
`	6Ø	a	61	b	62	c	63	d	64	e	65	f	66	g	67
h	68	i	69	j	6A	k	6B	l	6C	m	6D	n	6E	o	6F
p	7Ø	q	71	r	72	s	73	t	74	u	75	v	76	w	77
x	78	y	79	z	7A	{	7B	|	7C	}	7D	~	7E	DEL	7F

Esc 1B CR ØD LF ØA

Figure 41. ASCII to Hex Conversion Table

Entering SIS Commands: Helpful Tips

- Upper and lower case characters may be used interchangeably in the command field unless otherwise specified.
- Commands may be sent back-to-back without spaces (for example, `2!65V1Z`).
- Numbers can be entered as 1, 2, or 3 digits, for example, `8V` = `Ø8V` = `ØØ8V`.
- There are a few differences in how to enter the commands depending on whether you are using Telnet or a web browser.
  - When using these commands through a web browser, the URL reference is used to shorten the examples. "URL" refers to the full URL of the control interface and web page reference including all path information (such as `http://192.168.1ØØ.1Ø/myform.htm`).
  - To send any of the commands using a web browser you must prefix them with the full URL followed by `?cmd=`.
  - For control via a web browser, all non-alphanumeric characters must be represented as the hexadecimal equivalent, `%xx`, where `xx` represents the two-character hex byte. A comma (,), for example, would be represented as `%2C`. Characters such as %, +, and the space character ( ) must be encoded as hex bytes, or they will be misinterpreted by the IPCP. For example, the ASCII command `+V` must be encoded as `%2BV` for web browser use.

Character Type	Examples
Alphanumerics	0-9 a-z A-Z
Special characters	$ _ . + ! * ( ) ,
Reserved characters	' / ? : @ = & When used for their reserved purposes, these characters do not require encoding within a URL.

Reserved Characters
(for web encoding purposes)

Character		Hex	Dec
$	dollar	24	36
&	ampersand	26	38
+	plus	2B	43
,	comma	2C	44
/	forward slash/virgule	2F	47
:	colon	3A	58
;	semicolon	3B	59
=	equal	3D	61
?	question mark	3F	63
@	"at" symbol	40	64

- Some characters differ depending on the method you use to send the commands:

Telnet	Web browser
Escape (hex 1B)	W [must not be hex encoded]
Carriage return (hex 0D)	Pipe character (`|`) [must not be hex encoded]

NOTE: With Telnet you can use either an "Escape" (Esc) command or a "W" command, and the carriage return or the pipe character. With the web browser, you are required to use a "W" command and the pipe character.

In either method, `{Data}` = data that will be directed to a specified port and **must** be hex encoded if non-alphanumeric.

> **NOTE:** If you make adjustments, it takes up to 1 minute 40 seconds (100 seconds) for the data in the IPCP RAM to be saved to flash memory. Do not remove power during that period.

Symbol Definitions

↵ = CR/LF (carriage return/line feed) (hex 0D 0A)

← = Carriage return (no line feed, hex 0D)
(for URL-encoded commands, use the pipe character, **|**, instead)

• = Space character

| = Pipe (vertical bar) character

* = Asterisk character (which is a command character, not a variable)

Esc = Escape key (hex 1B)
(for URL-encoded commands, use **W** instead of **Esc**)

X1 = Specific port number or relay number (01-99)

Serial ports:	**IR/serial ports:**
01 = COM1 port	09 = IR/serial port 1
02 = COM2 port	10 = IR/serial port 2
03 = COM3 port	11 = IR/serial port 3
04 = COM4 port	12 = IR/serial port 4
05 = COM5 port	13 = IR/serial port 5
06 = COM6 port	14 = IR/serial port 6
07 = COM7 port	15 = IR/serial port 7
08 = COM8 port	16 = IR/serial port 8

Relay ports:	**Flex I/O ports:**
01 = Relay port 1	01 = I/O port 1
02 = Relay port 2	02 = I/O port 2
03 = Relay port 3	03 = I/O port 3
04 = Relay port 4	04 = I/O port 4
05 = Relay port 5	
06 = Relay port 6	
07 = Relay port 7	
08 = Relay port 8	

Switched power output ports:
01 = power port 1
02 = power port 2
03 = power port 3
04 = power port 4

00 = reserved or all ports

> **NOTE:** Port numbers are two ASCII characters (two bytes). For example, port 1 is represented as `Ø1`.

X2 = Command data section.

> **NOTE:** **For web encoding only**:
> data will be directed to the specified port and **must** be encoded (URL encoding) if it is non-alphanumeric. Change any **non-alphanumeric** character (%, +, **|**, ←, and the like) within the data section into the corresponding hexadecimal equivalent, `%xx`, where `xx` represents the two-character hex byte.
> For example, a space (hex: 20) would be encoded as `%2Ø` (hex: 25 32 30) and a plus sign (hex: 2B) would be encoded as `%2B` or hex 25 32 42.

X3 = Greenwich Mean Time (GMT) offset value
(-12.00 to +14.00) represents the time difference in hours and minutes (+/-hh:mm) relative to Greenwich, England. The leading zero is optional. For example, 5:30 = 05:30. Do not use a plus (+) sign if the GMT offset is positive.

X5 = On/off status
0 = off/disable
1 = on/enable

X11 = Version (typically listed to two decimal places; for example, `x.xx`)

X12 = IPCP 505 unit name. The name is a text string of up to 24 characters drawn from the alphabet (A-Z), digits (0-9), and minus sign/hyphen (-). No blank or space characters are permitted as part of a name. No distinction is made between upper and lower case. The first character **must** be a letter. The last character **must not** be a minus sign or hyphen.

X13 = Local date and time format

Set format (MM/DD/YY-HH:MM:SS).
Example: `Ø1/18/Ø5-1Ø:54:ØØ`.

Read format (day of week, date month year HH:MM:SS).
Example: `Tue, 13 Jun 2Ø11 18:19:33`.

X14 = IP address (xxx.xxx.xxx.xxx). Leading zeros in each of the four fields are optional in setting values, and they are suppressed in returned values. IPCP 505 default address: 192.168.254.254.

X15 = E-mail domain name; for example, `extron.com`

X17 = Time in tens of milliseconds to wait until the **first** response character is received via a serial port before terminating the current receive operation. (Default = 10 = 100 ms, max. = 32767.) The response includes leading zeros.

> **NOTE:** For commands that use both X17 and X20, both variables must be zero **or** both must be non-zero. In the RS (send data) command, X17 may be omitted as long as X20 is also missing.

X18 = Hardware (MAC) address (xx-xx-xx-xx-xx-xx) (00-05-A6-xx-xx-xx) For the location of this address, see ⑥ **MAC address** on page 13 in "Hardware Features and Installation".

X19 = Subnet mask (xxx.xxx.xxx.xxx). Leading zeros are optional in setting values in each of the four fields, and they are suppressed in returned values. Default = 255.255.0.0.

X20 = Time in tens of milliseconds to wait **between characters** being received via a serial port before terminating the current command or receive operation. The response includes leading zeros. (Default = 2 = 20 ms, max. = 32767.)
See the note for X17, as it pertains to this variable, as well.

X21 = Parameter (#L or #D) to set either the **L**ength of message to receive or the **D**elimiter value.
# = byte count (for L) or
# = a single ASCII character expressed in decimal form (for D).
The parameter is case sensitive; you must use capital "D" or capital "L."
Byte count # can be from 0 to 32767, default = 0.
The ASCII decimal # can be from 0 to 00255, default = 00000L.

Examples:
A 3-byte length = 3L.
A delimiter of ASCII 0A = 10D.
The response from the unit includes leading zeros.

X22 = Verbose/tagged response mode status:

> **NOTE:** In verbose/response mode, the device (the IPCP) responds with more information than it usually would. For example, the IPL can send out a notice of a change in some setting without receiving a query via your PC. That change could have been a result of an internal process (a script execution), a selection made using a touchpanel or keypad, a change made using GV or a web page, or input from a connected sensor or switch.
>
> That is an example of a verbose (wordy) relationship between the controller and a connected device. Verbose mode creates more network traffic than usual, which can slow down network performance.

0 = clear, default for Telnet connections
1 = verbose mode is on (enabled)
2 = verbose mode is off, tagged responses are sent for queries (tagged responses are enabled)
3 = verbose mode is on (enabled) and tagged responses are enabled and sent for queries

X22 value	Verbose Responses **Receive unsolicited responses (messages) for all actions** initiated via any source (touchpanel, port input, internal web page changes, or commands) instead of only for SIS commands	Tagged Responses **Receive tagged responses to read/view requests** (Responses to SIS commands are always tagged. Turning tagged responses on adds tags to the responses to SIS read requests.)
0		
1	✔	
2		✔
3	✔	✔

See the **verbose mode command** (Esc CV ←) on page 66 within the IP commands section in the command/response table for a brief explanation of what this communication mode is and what it does.

> **NOTE:** If tagged responses are enabled, all read commands return the constant string and the data or value, the same as in responses for setting a value. For example, for Esc CN ←, the response is **Ipn•**X12 ↵ rather than just the data (X12 ↵).

X23 = Priority status for receiving timeouts:
0 = use **send data string** command parameters (0 = default)
1 = use **configure receive timeout** command parameters

X25 = Baud rate: 300, 600, 1200, 1800, 2400, 3600, 4800, 7200, 9600 (default), 14400, 19200, 28800, 38400, 57600, or 115200

X26 = Parity (only the first letter is needed):
O = odd
E = even
N = none (default)
M = mark
S = space

X27 = Data bits: 7, 8 (default = 8)

X28 = Stop bits: 1, 2 (default = 1)

X29 = Serial port type:
0 = RS-232 (the only serial protocol supported by COM1-COM6 ports, and the default for COM7-COM8)
1 = RS-422
2 = RS-485

X30 = Flow control (only the first letter is needed):
H = hardware
S = software
N = none

X31 = Data pacing (time between bytes) in milliseconds (0000 - 1000). 0000 (0 ms) is the default.

X33 = Password (minimum length = 4 characters, maximum length = 12 characters). Passwords are case sensitive. No special characters are allowed: use alphanumeric characters. Disallowed characters are shown below.

Character		Hex	Dec
	Space	20	32
' "	Quotation marks	22	34
<	"Less than" symbol	3C	60
>	"Greater than" symbol	3E	62
#	Pound (hash mark)	23	35
%	Percent	25	37
{	Left curly brace	7B	123
}	Right curly brace	7D	125
|	Vertical bar / pipe	7C	124
\	Backslash	5C	92
^	Caret	5E	94
~	Tilde	7E	126
[	Left square bracket	5B	91
]	Right square bracket	5D	93
`	Grave accent	60	96

> **NOTE:** A user password cannot be assigned if no administrator password exists; the E14 error code will be returned. If the administrator password is cleared, then the user password is also removed.

X34 = Daylight saving time (DST) is a region-specific 1-hour offset that begins in spring and ends in fall.
0 = off/ignore (default)
1 = USA on – DST begins on the second Sunday of March at 2 AM and ends at 2 AM on the first Sunday of November. For example, time in California is GMT -8:00 from March to November and GMT -7:00 from November to March. However, DST should be turned off in Hawaii, American Samoa, Guam, Puerto Rico, the Virgin Islands, the eastern time zone portion of the state of Indiana, and the state of Arizona (excluding the Navajo Nation).
2 = Europe on – begins on the last Sunday in March, ends on the last Sunday in October. DST should be turned off for Iceland.
3 = Brazil on

X35 = Event number: 0 - 99
This is valid only while events are running.

X36 = Event buffer:
0 = receive
1 = user (absolute, unified)
2 = user (relative, data)
3 = NVRAM

X37 = Event buffer offset: 0 - [max. buffer size]

X38 = Event data buffer size (only the first letter is needed):
b = bit
B = byte (8 bits)
S = short (16 bits)
L = long (32 bits)

NOTE: This parameter is case sensitive.

X39 = Event data to write

X40 = Flex I/O mode:
0 = digital input
1 = digital output
2 = digital input with +5 VDC pull-up
3 = digital output with +5 VDC pull-up
4 = analog input
5 = analog input with +5 VDC pull-up
6 = digital input with adjusted thresholds (requires X55 and X56 thresholds)
7 = digital input with adjusted thresholds with +5 VDC pull-up (requires X55 and X56 thresholds)

X41 = Password to display on screen (response to password query or set). When the unit connects to a host device via RS-232, the password (X33), itself, is the response. When the connection is via IP, X41 is 4 asterisks (****) if a password has been assigned, or it is an empty field ( ) if a password hasn't been assigned.

X43 = Flex I/O port status:
0 = off
1 = on
n (0-4095), analog port voltage increments of about 0.006 V per step (for analog in modes, based on 12-bit A-to-D conversion over a range of 0 to about 24 V)

X44 = Number of bytes to read (1 - 27)

X45 = E-mail event number or mailbox (1 - 64). The response includes leading zeros.

X46 = E-mail address of recipient (such as `JDoe@extron.com`) for the person to whom messages will be sent. The e-mail address has a 31 character maximum.

X47 = Name (for CR commands) or numeral (1 - 999, for SM commands) of the e-mail file to be sent

NOTE: E-mail files must have a file extension of `.eml`. The first line of the file is the subject, the rest is the body of the e-mail.

X49 = Default name: a combination of the model name and the last 3 pairs of the MAC address of the unit (for example, `IPCP-5Ø5-Ø3-69-BØ`)

X50 = Redirection status:
0 = no redirection
1 - 16 = redirect serial port communication from the specified port (1 = COM1, 2 = COM2, 3 = COM3,... 8 = COM8; 9 = IR/serial port 1,... 16 = IR/serial port 8) to allow a serial pass-through mode (see **Serial pass-through (redirect mode)** on page 32 in the "Software-based Configuration and Control" section)

X52 = Security level of the connection:
0 = not logged in
11 = user
12 = administrator
The response includes leading zeros.

X53 = Timeout period in tens of milliseconds for serial data pass-through mode, after which event data can be inserted into the transmit buffer and the serial port is released to another source (Default = 10 = 100 ms, range = 1 - 32767.) The response includes leading zeros.

X54 = ASCII digit(s) representing the numeric value of the data element read from the event buffer (Leading zeros are suppressed.)

X55 = Upper signal transition threshold (detection of a "1") for digital inputs:
0-04095 (0-25.3 VDC)
328 = default ≈ 2 VDC

X56 = Lower signal transition threshold (detection of a "0") for digital inputs:
0-04095 (0-25.3 VDC)
164 = default ≈ 1 VDC.

NOTE: The lower threshold (X56) must be smaller than the upper threshold (X55).

X57 = IR playback file number (0 to 99) (no extension). The response includes leading zeros.

X58 = IR playback function number (1 to 137). The response includes leading zeros. IR function numbers 0 and 127 or higher can return information only.
0 = return all data
129 = manufacturer
130 = model
131 = class
132 = remote
133 = creation date
134 = comments
137 = user file name (a descriptive name the user/installer gave the file)

X59 = IR playback mode
0 = play once
1 = play continuously
The response includes leading zeros.

NOTE: Send the command again with mode = 0 to stop mode 1 playback.

X63 = Pulse time in 20 ms increments. If this parameter is missing or = 0, then pulse length = default = 25 = 500 ms. 1 = 20 ms (minimum pulse time) to 65535 = 1310700 ms (maximum pulse time).

X69 = IP connection timeout period specified in 10-second steps (1 - 65000, default = 30 = 300 seconds). If no data is received during the specified period, the Ethernet connection closes. Responses are returned with leading zeros.

X70 = The number (0 - 65535) to insert into an e-mail message if an *.eml file has an embedded server-side include "`<!--#echo var = "WCR|" -->`" (the Esc CR← command with no parameters) The numeral is a 16-bit number to be employed as the user defines.
This is an optional parameter. Use Ø as a placeholder if the optional X47 variable is used but X70 is not needed.
Maximum = 65535.

X73 = An e-mail account username of up to 31 characters. Do not use commas. This parameter is optional during setup and is used for SMTP authentication.

X74 = An e-mail account password (for SMTP authentication) of up to 31 characters.
Do not use commas. This parameter is optional during setup. If a password is set, the response is not the actual password characters but asterisks (****).

X85 = Switched output power load status:
0 = ok (total power draw <40 watts)
1 = at limit (total power draw is 40-44 watts)
2 = fault/overload (total power draw >44 watts)

X86 = Switched output power use:
total power drawn from all power output ports = *nnn,* in tenths of watts

X87 = Switched output power group:
0 = no group
1 = group 1
2 = group 2

X210 = IR/serial port configuration type
0 = IR port (default, 0 – 5 VDC)
1 = RS-232 port (±5 VDC)

NOTE: For commands and examples of computer or device responses mentioned in this guide, the character "Ø" is used for the number zero and "O" represents the capital letter "o".

Command/Response Table for SIS Commands

Command	ASCII (Telnet) (host to IPCP)	URL Encoded (web) (host to IPCP)	Response (IPCP to host)	Additional description

Serial port configuration and use

These commands apply to any port that uses RS-232 communication: both 1-way (output) and 2-way (bidirectional) RS-232 communication.

Send data string

```
Esc X1 * X17 * X20 * X21 RS ← X2
W X1 %2A X17 %2A X20 %2A X21 RS | X2
response from command ↵
```

NOTE: * X17 * X20 * X21 is optional. X17 may be omitted only if X20 is also missing. If these three variables are not specified, the default values are used. For this command, X17 and X20 must both a) equal zero or b) be nonzero, or c) both be omitted.

NOTE: **For web encoding** for X2, convert non-alphanumeric characters to hex numbers. A space (hex = 20) is encoded as %2Ø. A plus sign (hex = 2B) is encoded as %2B.

Example:

```
Esc Ø5*4*7*3L RS ←<data>
WØ5%2A4%2A7%2A3L RS |<data>
response from command ↵
```

NOTE: The data string (X2) in this RS command is limited to 200 bytes.

NOTE: Use the ASCII to decimal table below to convert the delimiter character for X21 when using a delimiter (D).

ASCII to Decimal Conversion Table

To find the decimal equivalent of the ASCII character, add the row heading and column heading numbers together.

	0	1	2	3	4	5	6	7	8	9
10	LF			CR						
20								Esc		
30			space	!	“	#	$	%	&	’
40	(	)	*	+	,	-	.	/	Ø	1
50	2	3	4	5	6	7	8	9	:	;
60	<	=	>	?	@	A	B	C	D	E
70	F	G	H	I	J	K	L	M	N	O
80	P	Q	R	S	T	U	V	W	X	Y
90	Z	[	\	]	^	_	‘	a	b	c
100	d	e	f	g	h	i	j	k	l	m
110	n	o	p	q	r	s	t	u	v	w
120	x	y	z	{	|	}	~	Del		

LF = line feed
CR = carriage return (←)
Esc = escape
Del = delete

X1 = Specific port number (Ø1 - 99):

Serial ports:	IR/serial ports:
Ø1 = COM1 port	Ø9 = IR/serial port 1
Ø2 = COM2 port	1Ø = IR/serial port 2
Ø3 = COM3 port	11 = IR/serial port 3
Ø4 = COM4 port	12 = IR/serial port 4
Ø5 = COM5 port	13 = IR/serial port 5
Ø6 = COM6 port	14 = IR/serial port 6
Ø7 = COM7 port	15 = IR/serial port 7
Ø8 = COM8 port	16 = IR/serial port 8

ØØ = reserved or all ports

X2 = command data section (< 200 bytes).

X17 = time in tens of ms for the IPCP to wait until receipt of the first response character before terminating the current receive operation (default = 1Ø = 100 ms, max. = 32767). The response includes leading zeros.

X20 = time in tens of milliseconds (ms) for the IPCP to wait between characters being received via a serial port before terminating the current receive operation (default = 2 = 20 ms, max. = 32767). The response includes leading zeros.

X21 = #L or #D. The letter parameter is case sensitive (requires a capital “D” or capital “L”). The response includes leading zeros.

L indicates the length of the message to be received.

D indicates the delimiter value that ends the response.

= byte count (for L) or a single ASCII character expressed in decimal form (for D). Byte count # can be from Ø to 32767, default = Ø. The ASCII decimal delimiter # value can be from Ø to ØØ255, default = ØL.

For #L, # is a regular ASCII (character) numeral. If the length is 50 bytes, # = 5Ø.

For #D, # can be any character(s) or number(s), but it is translated into decimal format for use in the command.

Examples: A 3-byte message length = 3L. A delimiter of $ would be entered as 36D (36 is the decimal equivalent of the dollar sign).
A delimiter of ASCII 0A = 10D (line feed).

Command/Response Table for SIS Commands (continued)

Command	ASCII (Telnet) (host to IPCP)	URL Encoded (web) (host to IPCP)	Response (IPCP to host)	Additional description
Configure serial port parameters[24]	Esc X1 * X25, X26, X27, X28 CP ←	W X1 %2A X25 %2C X26 %2C X27 %2C X28 CP |	Cpn X1 •Ccp X25, X26, X27, X28 ↵	X1 = serial port number: **Serial ports:** Ø1 = COM1 port, Ø2 = COM2 port, Ø3 = COM3 port, Ø4 = COM4 port, Ø5 = COM5 port, Ø6 = COM6 port, Ø7 = COM7 port, Ø8 = COM8 port **IR/serial ports:** Ø9 = IR/serial port 1, 1Ø = IR/serial port 2, 11 = IR/serial port 3, 12 = IR/serial port 4, 13 = IR/serial port 5, 14 = IR/serial port 6, 15 = IR/serial port 7, 16 = IR/serial port 8 X25 = baud rate (300-115200 baud, default = 9600 baud). X26 = parity (O = odd, E = even, N = none [default], M = mark, S = space). X27 = data bits: 7, 8 (default = 8). X28 = stop bits: 1, 2 (default = 1).
Example:	Esc 2*96ØØ,N,8,1CP ←	W2%2A96ØØ%2CN%2C8%2C1CP |	CpnØ2•Ccp96ØØ,N,8,1 ↵	Set port 2 for 9600 baud, no parity, 8 data bits, and 1 stop bit.
View serial port parameters	Esc X1 CP ←	W X1 CP |	X25, X26, X27, X28 ↵	
Example	Esc 2CP ←		96ØØ,N,8,1 ↵	
Configure mode[24]	Esc X1 * X29 CY ←	W X1 %2A X29 CY |	Cpn X1 •Cty X29 ↵	X29 = serial port type: 0 = RS-232 (the only serial protocol supported by COM1-COM6 ports, and the default for COM7-COM8) 1 = RS-422 2 = RS-485.
View mode	Esc X1 CY ←	W X1 CY |	X29 ↵	
Configure flow control	Esc X1 * X30, X31 CF ←	W X1 %2A X30 %2C X31 CF |	Cpn X1 •Cfl X30, X31 ↵	X30 = flow control (H = hardware, S = software, N = none). X31 = data pacing in milliseconds (0000 - 1000).
View flow control[24]	Esc X1 CF ←	W X1 CF |	X30, X31 ↵	
Configure receive timeout[24]	Esc X1 * X17 * X20 * X23 * X21 CE ←	W X1 %2A X17 %2A X20 %2A X23 %2A X21 CE |	Cpn X1 •Cce X17, X20, X23, X21 ↵	Set the time to wait (X17 = waiting time in tens of ms until receipt of the first response character before terminating the receive operation, X20 = waiting time in tens of ms between characters before terminating) and priority status. (X23: 0 = default, use **send data string** command parameters; 1 = use **configure receive timeout** command parameters) **for port** X1. X21 = #L **or** #D (see previous page). The response includes leading zeros.
View receive timeout	Esc X1 CE ←	W X1 CE |	X17, X20, X23, X21 ↵	

Command/Response Table for SIS Commands (continued)

Command	ASCII (Telnet) (host to IPCP)	URL Encoded (web) (host to IPCP)	Response (IPCP to host)	Additional description
Configure serial pass-through mode[24]	Esc X1 * X50 * X53 * X21 CD ←	W X1 %2A X50 %2A X53 %2A X21 CD |	Cpn X1 •Ccd X50 , X53 , X21 ↵	X1 = specific port number (01 - 08) X50 = Redirection status: Ø = no redirection 1 - 8 = redirect serial port communication from the corresponding COM port (see **Serial pass-through (redirect mode)** on page 32 in the "Software-based Configuration and Control" section). X53 = Timeout period in tens of milliseconds (1 - 32767) for data pass-through mode. X21 = Parameter (#L or #D) to set either the **L**ength of message to receive or the **D**elimiter value. # = byte count (for L) or # = a single ASCII character expressed in decimal form (for D). The parameter is case sensitive. Byte count # can be from 0 to 32767, default = Ø. The ASCII decimal # can be from 0 to 00255, default = ØØØØØL.
Terminate serial pass-through mode[24]	Esc X1 *Ø CD ←	W X1 %2A Ø CD |	Cpn X1 •Ccd ØØØØØ , ØØØØØ , ØØØØØL ↵	End serial pass-through.
View serial pass-through mode	Esc X1 CD ←	W X1 CD |	X50 , X53 , X21 ↵	
Ethernet port configuration and use				
Set current Ethernet connection timeout period[24]	Esc Ø* X69 TC ←	WØ%2A X69 TC |	PtiØ* X69 ↵	X69 = IP timeout period specified in 10-second steps (1 - 65000, default = 3Ø = 300 seconds). If no data is received during the specified period, the Ethernet connection closes. Responses include leading zeros.
	The current port timeout period applies to the currently open Telnet session only. When you start another Telnet session, it uses the default global port timeout period.			
View current connection timeout period	Esc ØTC ←	WØTC |	X69 ↵	
Set global Ethernet connection timeout period[24]	Esc 1* X69 TC ←	W1%2A X69 TC |	Pti1* X69 ↵	
View global connection timeout period	Esc 1TC ←	W1TC |	X69 ↵	

Command/Response Table for SIS Commands (continued)

Command	ASCII (Telnet) (host to IPCP)	URL Encoded (web) (host to IPCP)	Response (IPCP to host)	Additional description
IR/Serial port use				
The following variables are used for these IR/serial port commands: X1 = port number: Ø9 = IR/serial port 1 1Ø = IR/serial port 2 11 = IR/serial port 3 12 = IR/serial port 4 13 = IR/serial port 5 14 = IR/serial port 6 15 = IR/serial port 7 16 = IR/serial port 8 Port numbers are two ASCII characters (2 bytes). For example, port 1 is represented as 01. X57 = the IR file number (Ø-99), as in files 1.eir, 2.eir, 3.eir, and so on, stored in the controller. Each .eir file contains commands for a specific device.			X58 = IR playback function number (1-137), of a specific function or command set contained within the file. IR function numbers 0 and 127 or higher can return information only. Ø = return all data 129 = manufacturer 13Ø = model 131 = class 132 = remote 133 = creation date 134 = comments 137 = user file name (a descriptive name the user/installer gave the file). X59 = IR playback mode Ø = play once 1 = play continuously 2 = stop.	X210 = IR/serial port configuration type Ø = IR port (default, 0– 5 VDC) 1 = RS-232 port (±5 VDC).
View IR/serial port configuration	Esc X1 IC↵	W X1 IC |	X210↵	
Send an IR command[28]	Esc X1, X57, X58, X59 IR↵	W X1 %2C X57 %2C X58 %2C X59 IR | Irs X1, X57, X58, X59↵		Send an IR command via IR/serial output port number X1. The response includes leading zeros.
Get IR command info[13, 28]	Esc X57, X58 IR↵	W X57 %2C X58 IR |	{*descriptive text*}↵	The response to this command is the name/description (such as Power On, Power Off, Enter, Play, Stop, RGB, Menu) of the specific command you ask about.
Example:	Esc 3,1IR↵	W3 %2C 1IR |	POWER↵	Command/function 1 in file 3.eir is the Power command.
Example:	Esc 3,2IR↵	W3 %2C 2IR |	E13↵	Command/function 2 in file 3.eir is not defined or does not exist, so the controller returns E13, the invalid value error number.

NOTE: An IR driver must be loaded into the IPCP before IR command information can be read.

Command/Response Table for SIS Commands (continued)

Command	ASCII (Telnet) (host to IPCP)	URL Encoded (web) (host to IPCP)	Response (IPCP to host)	Additional description
Flex I/O port use				
For flex I/O commands, X40 = Flex I/O mode: Ø = digital input 1 = digital output 2 = digital input with +5 VDC pull-up 3 = digital output with +5 VDC pull-up 4 = analog input 5 = analog input with +5 VDC pull-up 6 = digital input with adjusted thresholds (requires X55 and X56 thresholds) 7 = digital input with adjusted thresholds with +5 VDC pull-up (requires X55 and X56 thresholds) **NOTES:** • Modes 6 and 7 (X40 = 6 or 7) allow you to specify the digital input signal voltage range. • The default signal range for digital input modes Ø and 2 is 1-2 VDC. X43 = Flex I/O port status: Ø = off 1 = on *n* (Ø-4Ø95), analog port voltage increments of about 0.006 V per step (for analog in modes, based on 12-bit A-to-D conversion over a range of 0 to about 24 V)				X55 = Upper signal transition threshold (detection of a "1") for digital inputs: Ø-Ø4Ø95 (0-25.3 VDC) 328 = default ≈ 2 VDC X56 = Lower signal transition threshold (detection of a "0") for digital inputs: Ø-Ø4Ø95 (0-25.3 VDC) 164 = default ≈ 1 VDC. **NOTE:** The lower threshold (X56) must be smaller than the upper threshold (X55). X63 = Pulse time in 20 ms increments. If this parameter is missing or = Ø, then pulse length = default = 25 = 500 ms. 1 = 20 ms (minimum pulse time) to 65535 = 1310700 ms (maximum pulse time).
Set I/O mode 0-5	X1*X40[	X1%2AX40%5B	CpnX1•IomX40↵	Set flex I/O port X1 to function as a digital input, digital output, or analog input; with or without using the +5 VDC pull-up resistor.
Set I/O mode 6-7	X1*X40*X55*X56[	X1%2AX40%2AX55%2AX56%5B	CpnX1•IomX40,X55,X56↵	
View I/O mode 0-5	X1[	X1%5B	X40↵	
View I/O mode 6-7	X1[	X1%5B	X40,X55,X56↵	
Pulse I/O state[14]	X1*3*X63]	X1%2A 3 %2A X63%5D	CpnX1•SioX43↵	
Toggle I/O state[14]	X1*2]	X1%2A 2 %5D	CpnX1•SioX43↵	
Set I/O state on[14]	X1*1]	X1%2A 1 %5D	CpnX1•Sio1↵	
Set I/O state off[14]	X1*Ø]	X1%2A Ø %5D	CpnX1•SioØ↵	
View I/O state	X1]	X1%5D	X43↵	
Relay port use				
Pulse relay	X1*3*X63 0	X1%2A 3 %2A X63 0	CpnX1•RlyX5↵	X1 = Relay port number: Ø1-Ø8 = Relay port 1-8. X63 = Pulse time (see details above). X5 = On/off status: Ø = off, 1 = on.
Turn relay off (open)	X1*Ø0	X1%2A Ø0	CpnX1•RlyØ↵	
Turn relay on (close)	X1*10	X1%2A 10	CpnX1•Rly1↵	
Toggle relay	X1*20	X1%2A 20	CpnX1•RlyX5↵	
View relay state	X1 0	X1 0	X5↵	

Command/Response Table for SIS Commands (continued)

Command	ASCII (Telnet) (host to IPCP)	URL Encoded (web) (host to IPCP)	Response (IPCP to host)	Additional description
Switched 12 VDC power output port use				
Set a switched power port on or off	Esc P X1 * X5 DCPP ←	WP X1 %2A X5 DCPP |	DcppP X1 * X5 ↵	X1 = switched power port number (1-4). X5 = port status: 0 = off, 1 = on.
Example:	Esc P1*Ø DCPP ←	WP1 %2A Ø DCPP |	DcppP1*Ø ↵	Example: turn 12 VDC output port 1 off (no power output).
View switched power port on/off status	Esc P X1 DCPP ←	WP X1 DCPP |	X5 ↵	
View the load condition status of the switched power ports	Esc S DCPP ←	WS DCPP |	X85 ↵	X85 = Switched output power load status: 0 = ok (total power draw <40 watts), 1 = at limit (total power draw is 40-44 watts), 2 = fault/overload (total power draw >44 watts).
View power use status	Esc A DCPP ←	WA DCPP |	X86 ↵	X86 = Switched output power use: total power drawn from all power output ports = *nnn,* in tenths of watts.
Example:	Esc A DCPP ←	WA DCPP |	114 ↵	Example: the power drawn from all four switched power output ports is 11.4 watts.
Assign a group number to a power port (power output grouping)	Esc G X1 * X87 DCPP ←	WG X1 %2A X87 DCPP |	DcppG X1 * X87 ↵	X87 = Switched output power group: 0 = no group 1 = group 1 2 = group 2.
View power output grouping	Esc G X1 DCPP ←	WG X1 DCPP |	X87 ↵	
Firmware version, part number, and information requests				
NOTE: Responses to commands differ depending on which, if any, verbose response mode the IPCP is in. See the **CV command** (Esc X22 CV ←, page 66) under IP setup commands later in this table.				
NOTE: In a ØQ query response, an asterisk (*****) after the version number indicates the version that is currently used. A question mark (**?** or **?.??**) indicates that the factory default firmware is the only firmware loaded in the IPCP. A carat (**^**) indicates the version of firmware that should be running, but, since a mode 1 reset was performed, the factory default firmware version is loaded and running instead. An exclamation point (**!**) indicates that the firmware is corrupted.				
Query firmware version number	Q *or* 1Q	Q *or* 1Q	X11 ↵ *or* VerØ1*X11 ↵	Show the firmware version (X11) of the IPCP to two decimal places. This query yields the number of the currently running version of the user-updatable firmware.
Example:	1Q	1Q	1.Ø1 *or* VerØ1*1.Ø1	
Query verbose firmware version information	ØQ	ØQ	{*response from 2Q*}–{*response from 3Q*}–{*response from 4Q*}↵ or VerØØ*{*response from 2Q*}–{*response from 3Q*}–{*response from 4Q*}↵	Show the bootstrap, factory-installed, and updated firmware versions. See 2Q, 3Q, and 4Q on the next page.
Example:	ØQ	ØQ	Ø.Ø8-1.ØØ(1.81-IPCP Series -Wed, 16 Jan 2ØØ3 ØØ:ØØ:ØØ GMT)-1.Ø1*(1.81-IPCP Series -Tue, 14 Jun 2Ø11 Ø3:56:14 GMT)↵	

Command/Response Table for SIS Commands (continued)

Command	ASCII (Telnet) (host to IPCP)	URL Encoded (web) (host to IPCP)	Response (IPCP to host)	Additional description
Query firmware version	1Q	1Q	X11↵ *or* Ver01*X11↵	This command shows the currently-running firmware version (X11) of the IPCP to two decimal places.
Example:	1Q	1Q	1.01↵	
Query bootstrap firmware version	2Q	2Q	X11↵ *or* Ver02*X11↵	The bootstrap firmware is not user-replaceable, but you may need this information during troubleshooting.
Example:	2Q	2Q	0.08↵	
Query factory firmware version	3Q	3Q	X11(*kernel version–model description–date time of upload*)↵ *or* Ver03*X11(*kernel version–model description–date time of upload*)↵	
Example:	3Q	3Q	1.00(1.81-IPCP Series -Wed, 17 Jan 2003 00:00:00 GMT)↵	In this example the factory firmware version is 1.00 and the IP Link kernel version is 1.81 for the IPCP, dated 17 January 2003.
NOTE: Factory-installed firmware is different from the bootstrap firmware, but it is also not user-replaceable. This firmware was installed at the factory; it is the version the controller reverts to after a **mode 1 reset** (see page 16 in the "Hardware Features and Installation" section).				
Query updated firmware version	4Q	4Q	X11 (*kernel version–model description–date time of upload*)↵ *or* Ver04*X11(*kernel version–model description–date time of upload*)↵	Use this command to find out which version of the firmware, if any, was uploaded into the controller after it left the factory.
Example:	4Q	4Q	1.01*(1.81-IPCP Series -Fri, 11 Feb 2011 03:56:14 GMT)↵	In this example the current firmware version is 1.01, the IP Link kernel version is 1.81, and the last firmware upload was on February 11, 2011.
NOTE: Responses to commands differ depending on which, if any, verbose response mode the IPCP is in. See the **CV command** (Esc X22 CV←, page 66) under IP setup commands later in this table.				
Request the IPCP part number	N	N	60-1071-02↵ *or* Pno60-1071-02↵	Show the IPCP part number.
Request the model name	1I	1I	IPCP•505↵ *or* Inf01*IPCP•505↵	IPCP 505.
Request the model description	2I	2I	(8) Bi-Directional Serial Ports, (8) Unidirectional IR/Serial Ports, (8) Relay Ports, (4) Flex I/O Ports, (4) 12VDC Ports, (1) eBUS Port↵ *or* Inf02* (8) Bi-Directional Serial Ports, (8) Unidirectional IR/Serial Ports, (8) Relay Ports, (4) Flex I/O Ports, (4) 12VDC Ports, (1) eBUS Port↵	

Command/Response Table for SIS Commands (continued)

Command	ASCII (Telnet) (host to IPCP)	URL Encoded (web) (host to IPCP)	Response (IPCP to host)	Additional description
Request system memory usage	3I	3I	# Bytes used out of # of Kbytes↵ *or* Inf03*# Bytes used out of # of Kbytes↵	Show amount of memory used and total available memory for system operations.
Example:	3I	3I	Inf03*12800 Bytes Used out of 1024 KBytes↵	
Request user memory usage	4I	4I	# Bytes used out of # of KBytes↵ *or* Inf04*# Bytes used out of # of KBytes↵	Show amount of user memory used and total available user memory. The maximum user memory on an IPCP is about 975 MB.
Example:	4I	4I	4096 Bytes Used out of 1001488 KBytes↵	
IP setup commands				
Set the unit name[24]	Esc X12 CN←	W X12 CN|	Ipn• X12↵	Change the IPCP unit name to one of your choosing (X12, user-defined unit name), such as "AuditoriumIPCP", "Rm316-AVcenter", or "exec-boardroom-ctrl".
	NOTE: The name consists of up to 24 alphanumeric characters (and the minus sign). The first character must be a letter, the last character cannot be a minus sign (hyphen). Spaces may not be used. Either case (upper, lower) is OK.			
Set unit name to factory default[24]	Esc •CN←	W %20 CN|	Ipn• X49↵	X49 = The name the IPCP was shipped with: IPCP-505-##-##-##, a combination of the model name and the last 3 pairs of hex numbers in the MAC address of the controller (for example, IPCP-505-06-1C-A0).
Read the unit name	Esc CN←	WCN|	X12↵ *or* X49↵	
Set date/time[24]	Esc X13 CT←	W X13 CT|	Ipt• X13↵	X13 = Local date and time format. The **set** format is *MM/DD/YY-HH:MM:SS*. *Example:* 01/31/11-10:54:00.
Read date/time	Esc CT←	WCT|	X13↵	The **Read** format is *day of week, DD month year HH:MM:SS*. *Example:* Wed, 15 Jun 2011 11:57:17.
Set GMT offset[24]	Esc X3 CZ←	W X3 CZ|	Ipz X3↵	Set the Greenwich Mean Time (GMT) offset value (X3) for the location of the IPCP installation. GMT offset (-12.00 to +14.00) represents the time difference in hours and minutes (+/-hh:mm) relative to Greenwich, England. The leading zero is optional. For example, 5:30 = 05:30. Do not use a plus (+) sign if the GMT offset is positive.
Read GMT offset	Esc CZ←	WCZ|	X3↵	

Command/Response Table for SIS Commands (continued)

Command	ASCII (Telnet) (host to IPCP)	URL Encoded (web) (host to IPCP)	Response (IPCP to host)	Additional description
Set daylight saving time[24]	Esc X34 CX ←	W X34 CX |	Ipx X34 ↵	
X34 = Daylight saving time (DST) is a region-specific 1-hour offset that begins in spring and ends in fall. **0 = off/ignore** (default) **1 = USA on** – Starting in 2007, DST begins on the second Sunday of March at 2 AM and ends at 2 AM on the first Sunday of November. For example, time in California is GMT -8:00 from March to November and GMT -7:00 from November to March. However, DST should be turned off in Hawaii, American Samoa, Guam, Puerto Rico, the Virgin Islands, the eastern time zone portion of the state of Indiana, and the state of Arizona (excluding the Navajo Nation). **2 = Europe on** – Begins on the last Sunday in March, ends on the last Sunday in October. DST should be turned off for Iceland. **3 = Brazil on**.				
Read daylight saving time	Esc CX ←	WCX |	X34 ↵	
Set DHCP on[24]	Esc 1 DH ←	W1DH |	Idh1 ↵	
Set DHCP off[24]	Esc Ø DH ←	WØDH |	IdhØ ↵	
NOTE: Changing DHCP from on to off also resets the IP address to the factory default (192.168.254.254).				
View DHCP on/off mode	Esc DH ←	WDH |	X5 ↵	X5 = 0 (off, default) or 1 (on).
Set IP address[24]	Esc X14 CI ←	W X14 CI |	Ipi• X14 ↵	X14 = IP address (xxx.xxx.xxx.xxx). Leading zeros in each of the four fields are optional in setting values.
Read IP address	Esc CI ←	WCI |	X14 ↵	Leading zeros in each of the four fields are suppressed in returned values.
Read hardware address (MAC)	Esc CH ←	WCH |	X18 ↵ *or* Iph• X18 ↵	X18 = hardware (MAC) address (ØØ-Ø5-A6-xx-xx-xx).
Set subnet mask[24]	Esc X19 CS ←	W X19 CS |	Ips• X19 ↵	X19 = subnet mask (xxx.xxx.xxx.xxx). Syntax is the same as for IP addresses. Leading zeros are optional in setting values.
Read subnet mask	Esc CS ←	WCS |	X19 ↵	Leading zeros are suppressed.
Set gateway IP address[24]	Esc X14 CG ←	W X14 CG |	Ipg• X14 ↵	
Read gateway IP address	Esc CG ←	WCG |	X14 ↵	
Get a connection listing	Esc CC ←	WCC |	{*number of connections*} ↵ *or* Icc{*number of connections*} ↵	Display the number of currently active IP client connections.
Example:	Esc CC ←	WCC |	ØØ2 ↵	*Example:* This shows two client connections.

Command/Response Table for SIS Commands (continued)

Command	ASCII (Telnet) (host to IPCP)	URL Encoded (web) (host to IPCP)	Response (IPCP to host)	Additional description
Set verbose/response mode[24]				

This command controls both verbose responses/messages and tagged (labeled) responses.

Verbose mode is a communication mode in which the device responds with more information than it usually would. For example, the IPCP can send out a notice of a change in some setting without receiving a query via your PC. That change could have been a result of an internal process (a scheduled script execution), a selection made using a touchpanel or keypad, a change made using GV or the embedded web pages of the device, or input (a voltage or resistance change at a port) from a connected sensor or switch. That is an example of a verbose (wordy) relationship between the control processor and a connected device.

- With verbose mode **off**, you receive no notification of those changes or events.
- With verbose mode **on**, you receive status messages, such as X85↵ when the switched power ports change from normal operation to an overload state, or X5↵ when a relay is opened, closed, or toggled. These are not replies to a command that you send, but they are unsolicited messages that are generated by the equipment.

NOTE: Verbose mode creates more network traffic than usual, which can slow down network performance. Verbose mode is usually enabled for troubleshooting and disabled for daily use.

- By default, when the IPCP is connected via Ethernet, verbose mode is disabled in order to reduce the amount of communication traffic on the network.
- If you want to use the verbose mode (other than mode Ø) with a controller, this mode must be set to "on" each time you reconnect to the controller.

X22 value	Verbose Responses: Receive unsolicited messages for all actions initiated via any source (touchpanel, port input, internal web page changes, or commands) instead of only for SIS commands	Tagged Responses: Receive tagged responses to read/view requests (Responses to SIS commands are always tagged. Turning tagged responses on adds tags to the responses to SIS read requests.)
0		
1	✓	
2		✓
3	✓	✓

	Esc X22 CV←	W X22 CV|	Vrb X22↵	Set the verbose mode. For X22: Ø = clear/off (responses are plain, untagged), default 1 = verbose mode is on (enabled) 2 = verbose mode is off, tagged responses are sent for queries (tagged responses are enabled) 3 = verbose mode is on (enabled) and tagged responses are enabled and sent for queries.

NOTE: If tagged responses are enabled, all read or view commands return the constant (tagged) string and the data or value, the same as in responses for setting a value.
For example, for Esc CN←, the verbose response is Ipn·X12↵ rather than just the data (X12↵).

Read verbose mode status	Esc CV←	WCV|	X22↵	

Command/Response Table for SIS Commands (continued)

Command	ASCII (Telnet) (host to IPCP)	URL Encoded (web) (host to IPCP)	Response (IPCP to host)	Additional description
Password and security settings				
Read the security level of the connection	Esc CK ←	WCK |	X52 ↵ *or* Pvl X52 ↵	For X52: Ø = not logged in 11 = user 12 = administrator. The response includes leading zeros.
Set administrator password[24]	Esc X33 CA ←	W X33 CA |	Ipa• X41 ↵	Set the administrator access password (X33, 4 to 12 alphanumeric characters). The password is case sensitive. Special characters (spaces, symbols) are not allowed. X41 = Password to display on screen (response to password query). X41 is 4 asterisks (****) if a password has been assigned, or it is an empty field ( ) if a password has not been assigned.
Clear administrator password[24]	Esc • CA ←	W%2Ø CA ↵	Ipa• ↵	Clear/remove all passwords (administrator and user).
NOTE: If the administrator password is cleared, the user password is also cleared.				
Read administrator password[24]	Esc CA ←	WCA |	X41 ↵	
Set user password[14, 24]	Esc X33 CU ←	W X33 CU |	Ipu• X41 ↵	Set the user password (X33 is 4 to 12 alphanumeric characters). The password is case sensitive. Special characters (spaces, symbols) are not allowed. X41 = Password that is displayed on screen.
NOTE: A user password cannot be assigned if an administrator password does not exist. Also, if the administrator password is cleared, the user password is also cleared.				
Clear user password[24]	Esc • CU ←	W%2ØCU |	Ipu• ↵	This clears the user password only.
Read user password[24]	Esc CU ←	WCU |	X41 ↵	

Command/Response Table for SIS Commands (continued)

Command	ASCII (Telnet) (host to IPCP)	URL Encoded (web) (host to IPCP)	Response (IPCP to host)	Additional description
Remapping port designations				
For security reasons the network administrator may wish to assign new/different port numbers to the Telnet, web browser, and direct access ports of the controller or to disable one or more ports. Typically Telnet uses port 23, web access is via port 80 (HTTP), and direct access is via port 2001.				
ATTENTION: Do **not** set two or more ports to the same port number. Setting two ports to the same number could cause networking conflicts and will also result in an E13 (invalid parameter) error.				
NOTE: If you remap a port, you must set the port number to 1024 or higher, unless you reset the port to the default number or disable the port by setting it to Ø.				
Set the Telnet port map[24]	Esc *port#*MT ↵	W*port#*MT |	Pmt *port#* ↵	Select a number (*port#*) for the port that will not conflict with any other ports.
Reset the Telnet port map[24]	Esc 23MT ↵	W23MT |	Pmt ØØØ23 ↵	This resets the Telnet port to port 23.
Disable the Telnet port map[24]	Esc ØMT ↵	WØMT |	Pmt ØØØØØ ↵	Setting the port number to 0 disables the port.
Read the Telnet port map	Esc MT ↵	WMT |	*port#* ↵	If set to the default port number, the response is ØØØ23.
Set the web (HTTP) port map[24]	Esc *port#*MH ↵	W*port#*MH |	Pmh *port#* ↵	
Reset the web (HTTP) port map[24]	Esc 8ØMH ↵	W8ØMH |	Pmh ØØØ8Ø ↵	This resets the web port to port 80.
Disable the web (HTTP) port[24]	Esc ØMH ↵	WØMH |	Pmh ØØØØØ ↵	
Read the web (HTTP) port map	Esc MH ↵	WMH |	*port#* ↵	
Set the initial port number for the direct access port map[24]	Esc *port#*MD ↵	W*port#*MD |	Pmd *port#* ↵	This command sets the initial (lowest) port number for the range numbers assigned to the serial ports for direct port access (see page 12 for **port location** and page 32 for more on **direct access**). By default the IPCP direct access port numbers start at 2001 (for COM1) and go up to 2016 (for IR/serial port 8).
Reset the direct access port map[24]	Esc 2ØØ1MD ↵	W2ØØ1MD |	Pmd Ø2ØØ1 ↵	This resets the initial direct access port to port 2001.
Disable the direct access ports[24]	Esc ØMD ↵	WØMD |	Pmd ØØØØØ ↵	
Read the direct access port map	Esc MD ↵	WMD |	*port#* ↵	

Command/Response Table for SIS Commands (continued)

Command	ASCII (Telnet) (host to IPCP)	URL Encoded (web) (host to IPCP)	Response (IPCP to host)	Additional description
Directory commands				
Change or create a directory	Esc *path/directory/* CJ ←	W*path*%2F*directory*%2F CJ |	Dir•*path/directory/* ↵	The directory name must be composed of alphanumeric characters and may include the minus sign (hyphen, -) and the colon (:). The first character must be a letter. Case does not matter. No blank or space characters are permitted in the name. Include the **full path**, not just the name of the directory. Nonalphanumeric characters in the path (such as /) must be encoded to hex characters for use with a web browser.
NOTE: A directory does not fully exist until a file has been copied into that path. Also, the IPCP operates differently from PC operating systems: files stored in and directories created in the IPCP may have the same names.				
Example:	Esc majordirectory/subdirectory/next-level/ CJ ←	W*majordirectory* %2F *subdirectory* %2F *next-level* %2F CJ |	Dir•*majordirectory/subdirectory/next-level/* ↵	In this case, the path is majordirectory/subdirectory/. The directory that was just created or changed to is called next-level.
Example:	Esc *custompages/HTMLfiles/* CJ ←	W*custompages* %2F *HTMLfiles* %2F CJ |	Dir•*custompages/HTMLfiles/* ↵	This example created a subdirectory for storing custom-made HTML files from the user. The directory that was just created is called HTMLfiles.
Example:	Esc oak/CJ ←	W oak%2F CJ |	Dir•oak ↵	
Change back to the root directory	Esc /CJ ←	W%2F CJ |	Dir•/ ↵	
Go up one directory level	Esc .. CJ ←	W%2E%2E CJ |	Dir•*path/directory/* ↵	
View the current directory	Esc CJ ←	WCJ |	*path/directory/* ↵	
NOTE: The current directory is determined on a per-connection basis. At the beginning of each IP connection/session, the current directory is selected as the root directory.				
File handling commands				
Erase the user-supplied web page and files[24,28]	Esc *filename* EF ←	W*filename* EF |	Del• *filename* ↵	
Erase the current directory and its files[24,28]	Esc /EF ←	W%2F EF |	Ddl ↵	
Erase the current directory and its subdirectories[24,28]	Esc //EF ←	W%2F%2F EF |	Ddl ↵	

Command/Response Table for SIS Commands (continued)

Command	ASCII (Telnet) (host to IPCP)	URL Encoded (web) (host to IPCP)	Response (IPCP to host)	Additional description
List files from the current directory	Esc DF↵	WDF|	[filename 1]•[day, date time of upload]GMT•[file size 1 in bytes]↵ [filename 2]•[day, date time of upload]GMT•[file size 2 in bytes]↵ [filename 3]•[day, date time of upload]GMT•[file size 3 in bytes]↵ … [filename *n*]•[day, date time of upload]GMT•[file size *n* in bytes]↵ [space remaining (to 7-digits)]•Bytes Left ↵↵	Retrieve a list of files stored in the controller. Each line of the response lists a different file name and its corresponding file size. The last line of the response indicates how much available file space there is.
When working with the IPCP 505 embedded web pages, the response visible in a JavaScript™ server-side include (inserted between `<script> </script>` tags into HTML source code) follows this structure:			var file=new Array(); file[1]="[filename 1],[day, date time1 of upload] GMT, [file size 1 in bytes]";↵ file[2]="[filename 2],[day, date time2 of upload] GMT, [file size 2 in bytes]";↵ file[3]="[filename 3],[day, date time3 of upload] GMT, [file size 3 in bytes]";↵ … file[*n*]="[filename *n*],[day, date time*n* of upload] GMT, [file size *n* in bytes]";↵ file[*n*+1]="[space remaining (to 7-digits)],Bytes Left";↵↵	
Example (via Telnet or HyperTerminal):	Esc DF↵	WDF|	4.evt Tue, 01 Mar 2011 02:03:07 GMT 42233↵ 1.eml Tue, 01 Mar 2011 02:03:34 GMT 200↵ 2.eml Tue, 01 Mar 2011 02:03:34 GMT 300↵ 2.eir Tue, 01 Mar 2011 02:03:34 GMT 1683↵ 6.evt Tue, 01 Mar 2011 02:03:36 GMT 17956↵ 4.eir Tue, 01 Mar 2011 02:03:47 GMT 6849↵ IPCPmain.sc Tue, 01 Mar 2011 02:03:52 GMT 8515↵ 0.evt Tue, 01 Mar 2011 02:03:56 GMT 34413↵ 99.eml Tue, 01 Mar 2011 02:04:19 GMT 178↵ buttons.xml Tue, 01 Mar 2011 02:04:19 GMT 17214↵ IPCP.cfg Wed, 16 Mar 2011 21:34:45 GMT 7188↵ 6568448 Bytes Left↵↵	
List files from the current directory and its subdirectories	Esc LF↵	WLF|	(See responses to Esc DF↵, above.)	The response is the same except that the path/directory precedes file names for files within the subdirectories.

Command/Response Table for SIS Commands (continued)

Command	ASCII (Telnet) (host to IPCP)	URL Encoded (web) (host to IPCP)	Response (IPCP to host)	Additional description
File streaming commands				
NOTE: File streaming commands should be used by advanced programmers only.				
Load a file to user flash memory via Telnet or RS-232[24, 28]				
	Esc+ UF *filesize, filename* ←{raw, unprocessed data in a file of up to *filesize*}		Upl↵	
or				
Load file to user flash memory via Telnet or RS-232 and set specific time and date for the uploaded file[24, 28]	Esc+ UF *filesize*<day-of-week>●<month>●<day>●<year>●<hour>●<minute>●<second>, filename*←{raw, unprocessed data in a file of up to *filesize*}		Upl↵	<*day-of-week*> = 1-7 where 1 = Sunday. <*month*> = 1-12 where 1 = January. <*day*> = 1-31. <*hour*> = 0-23.
NOTES: • If the IPCP has insufficient memory available to store the sent file, it responds with Fld↵ (failed) instead of with Upl↵ (uploaded). • Firmware can be updated by using this command to upload an ____.s19 file to the IPCP. If the IPCP determines that the file is not intended for its model, the Upl↵ response is followed by a Fwm↵ (firmware mismatch) response.				
Retrieve a file from user flash memory via Telnet or RS-232[28]				
	Esc *filename* SF←			
		W *filename* SF|	{4 bytes of *filesize*, and then raw data from the file}	
Load a file to user flash memory via port 80 (HTTP, web)				
	Send a Post command on port 80 followed by the delimited data to be written to the file in flash memory.			
Retrieve a file from user flash memory via port 80 (HTTP, web)				
	Send a Page Get command on port 80 followed by WSF|			
			{The response is raw data from the file.}	
Example:	http://192.168.254.254/mypage.html?cmd=WSF|			
			{data from the file mypage.html}	
Web browser-specific commands				
Read response from last URL command	Esc UB←	WUB|	{response from command}↵	

Command/Response Table for SIS Commands (continued)

Command	ASCII (Telnet) (host to IPCP)	URL Encoded (web) (host to IPCP)	Response (IPCP to host)	Additional description
E-mail commands				
Configure e-mail events (mailbox)[24]	Esc X45, X46, X47 CR←	W X45%2C X46%2C X47CR|	Ipr X45, X46, X47↵	X45 = e-mail event number (1 - 64). X46 = e-mail recipient address (for example, JDoe@extron.com) for the person to whom messages will be sent. This address is limited to 31 characters. X47 = name of e-mail file to be sent (1.eml, 2.eml, ... 64.eml) (first line of the file = the subject, the rest = the body of the e-mail).
Example:	Esc 5, jdoe@extron.com, 7.eml CR←	W5 %2C jdoe %4Ø extron %2E com %2C 7 %2E eml CR|	Ipr 5, jdoe@extron.com, 7.eml↵	For e-mail event 5, send file 7.eml to jdoe@extron.com.
Read e-mail event	Esc X45 CR←	W X45 CR|	X46, X47↵	
Send e-mail file specified in the e-mail event configuration[24]	Esc X45 SM←	W X45 SM|	Eml X45↵	X45 = e-mail event number (1 - 64).
Send a different e-mail file (one not configured for an e-mail event) or send an e-mail file using a different e-mail address (one that has not been specified via the CR command during e-mail configuration)[24]	Esc X46,X45,X70,X47 SM←	W X46%2C X45%2C X70%2C X47SM|	Eml X45↵	X46 = e-mail recipient address, limited to 240 characters. X70 = The number to insert into an e-mail message if a ____.eml file has an embedded server-side include "<!--#echo var = "WCR|" -->" (the Esc← command with no parameters). The numeral is a 16-bit number to be employed as the user defines. This is an optional parameter. Use Ø as a placeholder if the optional X47 variable is used but X70 is not needed. X47 = *xxx*, where *xxx* = a number 1 - 999 corresponding to the e-mail file name (*xxx*.eml). If *xxx* = Ø or no parameter is given, the unit sends the file that was set via the CR command.

NOTE: If file X47.eml is not found when the SM command is executed, the IPCP sends a default e-mail message.

Command/Response Table for SIS Commands (continued)

Command	ASCII (Telnet) (host to IPCP)	URL Encoded (web) (host to IPCP)	Response (IPCP to host)	Additional description
Set e-mail server IP address and user domain name[24]	Esc X14,X15,X73,X74 CM←	W X14%2C X15%2C X73%2C X74 CM|	Ipm•X14,X15,X73,X74↵	X14 = IP address (*xxx.xxx.xxx.xxx*). Leading zeros are optional in setting values; they are suppressed in returned values. X15 = E-mail domain name; `extron.com`, for example X73 = An e-mail account username (for SMTP authentication) of up to 31 characters. This parameter is **optional** during setup. X74 = An e-mail account password (for SMTP authentication) of up to 31 characters. This parameter is **optional** during setup. In a response, instead of the actual password, X74 is displayed as 4 asterisks (****) if a password has been set up or as nothing ( ) if it has not.
	NOTES: • The variables X73 and X74 are optional for this command. However, if you use them, you must use **both** variables together. • Do not use commas in the names or passwords.			
Example:	Esc 10.1.5.49,extron.com,JaneQInstaller,s3cretK3y CM←	W10.1.5.49%2C extron.com%2C JaneQInstaller%2C s3cretK3y CM|	Ipm•10.1.5.49,extron.com,JaneQInstaller,****↵	
Read e-mail server IP address and user domain name	Esc CM←	W CM|	X14,X15 X73,X74↵	

Event control

NOTES: • The "F" must be capitalized in these event commands.
• IPCP responses to event read/write commands include binary data.

For buffer memory commands:

X35 = Event number: 0 - 99.

X36 = Event buffer:
0 = receive
1 = user (absolute, unified)
2 = user (relative, data)
3 = NVRAM.

X37 = Event buffer offset: 0 - [max. buffer size].

X38 = Event data buffer size (case-sensitive parameter):
b = bit
B = byte (8 bits)
S = short (16 bits)
L = long (32 bits).

X39 = Event data to write.

X54 = ASCII digit(s) representing the numeric value of the data read from the event buffer (Leading zeros are suppressed.)

Read event buffer memory[27]	Esc X35, X36, X37 X38 E←	W X35%2C X36%2C X37 X38 E|	X54↵	
Write event buffer memory[24,27]	Esc X35, X36, X37, X39 X38 E←	W X35%2C X36%2C X37%2C X39 X38 E|	Evt X35, X36, X37, X39↵	**NOTE:** The response includes leading zeros (5 digits each for X35, X36, X37; 10 digits for X37).
Read string from event buffer memory[27]	Esc X35, X36, X37, X44 FE←	W X35%2C X36%2C X37%2C X44 FE|	{*string*}↵	X44 = Number of bytes to read (1 - 27). {*string*} is the event data string.
Write string to event buffer memory[24,27]	Esc {*string*}* X35, X36, X37 FE←	W{*string*}%2A X35%2C X36%2C X37 FE|	Evt X35, X36, X37 {*string*}↵	

Command/Response Table for SIS Commands (continued)

Command	ASCII (Telnet) (host to IPCP)	URL Encoded (web) (host to IPCP)	Response (IPCP to host)	Additional description
Start events[24,27]	Esc 1AE←	W1AE|	Ego↵	Start all events.
Stop events[24,27]	Esc ØAE←	WØAE|	Est↵	Stop running all events.
Query quantity of events running	Esc AE←	WAE|	#####↵ *or* Enm #####↵	The response is the quantity of currently running events, and it includes leading zeros. For example, if two events are running, the response is ØØØØ2↵.
Reset (zap) commands and erase commands				
Erase the flash memory[24]	Esc ZFFF←	WZFFF|	Zpf↵	
Reset all device settings to factory defaults[24]	Esc ZXXX←	WZXXX|	Zpx↵	The "reset all settings" command does not affect IP settings or flash memory.
NOTES: • The ZXXX command does not reset any IP-related settings such as the IP address, subnet mask, and gateway IP address. It also does not affect user files stored in flash memory. • Contact input ports are reset to open position, relays are set to open, receive timout periods are reset to defaults, port redirection settings are cleared and ended.				
Reset all device settings and delete files[24]	Esc ZY←	WZY|	Zpy↵	
NOTE: This command is intermediate between the ZXXX and ZQQQ commands. It is an absolute system reset **excluding** IP settings (IP address, subnet mask, gateway IP address, unit name, DHCP settings, port mapping). This allows you to maintain communication with the IPCP. Files, file directories, and passwords are erased by this command. This reset is recommended after you perform a firmware update.				
Absolute system reset[24] (mode 5 reset)	Esc ZQQQ←	WZQQQ|	Zpq↵	Reset all settings/memories. The ZQQQ command resets everything (all settings, adjustments, the IP address, and subnet mask) to the factory default values. Files in flash memory are also erased by this command. The firmware version does not change. The IP address is reset to 192.168.254.254, the subnet mask is reset to 255.255.0.0.
NOTE: This command is identical to **reset mode 5**, discussed in **Resetting the Unit** starting on page 16 in the "Hardware Features and Installation" section.				

Reference Information

This section of the guide includes the following reference items:

- **Glossary**
- **File Types: a Key to Extron-specific File Names**

Full product specifications are available via the IPCP 505 product page at **www.extron.com**.

Glossary

10/100Base-T Ethernet which uses unshielded twisted pair (UTP - CAT 5, CAT 5e, CAT 6) cable, where the amount of data transmitted between two points in a given amount of time is equal to either 10 Mbps or 100 Mbps.

ARP (Address Resolution Protocol) A protocol which assigns an IP address to a device based on the MAC or physical machine address of the device.

Custom web page Any file that can be loaded into an IPCP and served by the internal web server. The IPCP can be used for various web-based tasks. The web page provides a way to control the IPCP and other devices attached to it without use of the software, and with or without an accompanying event script. Any number and size of graphics can be used. If they are too large to fit in the nonvolatile memory of the IPCP, web pages can be created so that they can be served from another web server using Microsoft Internet Information Services (IIS).

DHCP (Dynamic Host Configuration Protocol) A standardized communications protocol that enables network administrators to locally and automatically manage the assignment of IP addresses within the network of an organization.

Driver A software package that controls the interface between the controller and peripheral devices.

Ethernet A network protocol that uses MAC addresses instead of IP addresses to exchange data between computers. Using ARP (see above) with TCP/IP support, Ethernet devices can be connected to the Internet. An Ethernet LAN typically uses unshielded twisted pair (UTP) wires. Ethernet systems currently provide transmission speeds of 10 Mbps or 100 Mbps.

Event script A program that controls an IP Link product. Event scripts are written in the "Extron C" language (`.sc`), and compiled into a machine-readable event script file (`.evt`). The Global Configurator program performs this compilation and uploads the compiled event file onto the IPCP 505. The Extron C language is similar to ANSI C, with some differences. As long as event scripts are turned on, they run continuously on the unit.

HTTP (HyperText Transfer Protocol) A web protocol based on TCP/IP that is used to fetch HyperText objects from remote web pages.

IP (Internet Protocol) The protocol or standard used to send information from one computer to another on the Internet.

IP address A unique, 32-bit, binary number (12 digit decimal number, xxx.xxx.xxx.xxx) that identifies each device or device port (an information sender and/or receiver) that is connected to a LAN, WAN, or the Internet. IP addresses can be static (see static IP) or dynamic (see **DHCP**).

IP net mask/subnet mask — See subnet mask.

MAC (Media Access Control) Address
A unique hardware number given to devices that connect to a network such as the Internet. When a computer or networking device (router, hub, interface, and the like) is connected to a LAN or the Internet, a table (see ARP) relates the IP address of the device to its corresponding physical (MAC) address on the LAN.

Ping A utility/diagnostic tool that tests network connections. It is used to determine if the host has an operating connection and is able to exchange information with another host.

Port number A preassigned address within a server that provides a direct route from the application to the transport layer or from the transport layer to the application of a TCP/IP system.

SSI (server side include)
A type of HTML instruction set that tells the IPCP (or some other web server) dynamically which material to include in the contents of a web page or e-mail. SSI files typically have a file extension of `.shtml`.

Static IP An IP address that has been specifically (instead of dynamically—see **DHCP**) assigned to a device or system in a network configuration. This type of address requires manual configuration of the actual network device or system and can only be changed manually or by enabling DHCP.

Subnet — See subnetwork.

Subnet address The portion of an IP address that is specifically identified by the subnet mask as the subnetwork.

Subnet mask A 32-bit binary number (12 digit decimal number, xxx.xxx.xxx.xxx) used on subnets (smaller, local networks) to help routers determine which network traffic gets routed internally (within the subnetwork) to local computers and which network traffic goes out to the rest of the network or the Internet. It is an address mask used to identify the bits of an IP address that are used for the subnet address. Using a mask, the router does not need to examine all 32 bits, only those selected by the mask.

Subnetwork A network that is part of a larger IP network and is identified by a subnet address. Networks can be segmented into subnetworks to provide a hierarchical, multilevel routing structure.

TCP (Transmission Control Protocol)
A connection-oriented protocol defined at the Transport layer of the OSI reference model. It provides reliable delivery of data.

TCP/IP (Transmission Control Protocol/Internet Protocol)
The communication protocol of the Internet. Computers and devices with direct access to the Internet are provided with a copy of the TCP/IP program to allow them to send and receive information in an understandable form.

Telnet A standard terminal emulation utility/protocol that allows a computer to communicate with a remote user/client. A user who wishes to access a remote system initiates a Telnet session using the address of the remote client. The user may be prompted to provide a user name and password if the client is set up to require them. Telnet enables users to log in on remote networks and use those resources as if they were locally connected.

Tool tip Text that appears when the mouse pointer hovers over a button or other item on screen.

UDP (User Datagram Protocol)
An Internet protocol for sending short packets of information quickly between networked devices. It is faster than TCP and is often used for broadcast and multicast communication, but it does not include data verification to ensure that all packets arrived at their destination.

URL (Uniform Resource Locator)
The address (such as www.extron.com) that lets a resource on the internet be identified, located, and accessed.

Verbose

A wordy way of speaking. For the IPCP and other IP-enabled products, verbose mode is a communication mode in which the device responds with more information than it usually would. For detailed information, see the verbose mode **SIS commands** on page 66 in the "SIS Programming and Control" section. Verbose mode is usually enabled for troubleshooting and disabled for daily use. Verbose mode creates more network traffic than usual and can slow down performance.

File Types: a Key to Extron-specific File Names

You must have a basic understanding of the types of files used by the controller in order to decide what (if anything) to do with them.

- **`___.cdc`** — These are compressed device configuration files created and used by Global Configurator.

  ATTENTION: `___.cdc` files should **NOT** be deleted.

- **`___.eir`** — These are IR driver files containing infrared commands. There is a separate `.eir` file for each device the IPCP controls via infrared communication. This is the type of file created during IR learning. Via Global Configurator, these files can be imported and associated with one of the IR ports on the controller.
- **`___.eml`** — E-mail template files have the `.eml` extension. These files are used to generate e-mail messages such as those regarding projector disconnection and excessive projector lamp hours. The first line of the file is the subject. The rest of the file contains the body of the e-mail. For the IPCP, these files are numerically named (1 through 64). For example, `1.eml`, `2.eml`, `3.eml`,... `64.eml`.
- **`___.evt`** — These are event files, the most important files for the functioning of the IPCP. Almost everything the IPCP does is coordinated by the scripts in the main event file, `Ø.evt`. The other event files perform device driver functions.

  ATTENTION: Event files should **NOT** be deleted. They are necessary for the operation of the IPCP. Never delete the main event file (`Ø.evt`).

- **`_____.gc2`** or **`_____.gcz`** — These are configuration files that are used by Global Configurator only, not by the IPCP controller. They contain configuration settings that must be processed by Global Configurator to create device configuration and event files for the IPCP. Global Configurator 3 is capable of loading all GC2 project files from GC version 2.0.3.3 and up. GCZ files can be opened by clicking **`File`** > **`Open`**, by clicking the toolbar icon, or by double-clicking on the GCZ file. GC2 and GCC files must be imported, however.
- **`_____.s19`** — This is an Extron-supplied firmware update file. This file is not displayed on the **File Management** embedded web page (see page 43). See the **Firmware Updates** section starting on page 78 for details on firmware updates. Firmware cannot be updated by loading an `.s19` file through the File Management page, but it can be updated via the **Firmware Upgrade** web page (see page 42).

Firmware Updates

If the need arises, you can replace the IPCP main firmware without opening the unit or changing firmware chips. This section covers the following aspects of how to do that:

- **Determining the Firmware Version** — How to find the current firmware version
- **Updating the Main Firmware** — How to download and replace firmware

Determining the Firmware Version

There are several ways to check which version of firmware the controller is using:

- The IP Link Settings tab within Global Configurator (GC) software
- The System Status or the System Settings page of the IPCP embedded web pages
- The GlobalViewer web pages
- The response from the controller to an SIS command of **1Q** (see page 62) or **ØQ** (see page 62)

Using the Global Configurator Software

1. Via Ethernet, connect a PC (on which the Global Configurator program has been installed) to the IPCP.
2. Start the Global Configurator (GC) program and open a project (see the *Global Configurator Help* file and see the **Software-based Configuration and Control** section of this guide on page 18 for details).
3. In the window on the left side of the GC screen, click on the name of the IPCP for which you want to check the firmware version.
4. In the right side of the GC screen, click the **`IP Link Settings`** tab.
5. Click the **`Refresh`** button. The firmware version is listed in the System Description area.

Using a Web Browser

The IPCP controller comes with a set of factory default embedded web pages. Also, if the IPCP is used as part of a network of devices based on IP Link technology, such as IP Link control processors and MediaLink controllers, the GlobalViewer (GV) application could be installed in the IPCP as well as in other IP Link devices within the network. See the *Global Configurator Help* file for information on how to use that software and the resulting web pages. Either type of web page (factory default or GV) can be used to find the part number.

1. Connect the controller to a PC via an Ethernet connection, or connect the controller and the PC to a network/LAN. For details see the **Hardware Features and Installation** section starting on page 7, the **Software-based Configuration and Control** section starting on page 18, and the *IPCP 505 Setup Guide*.
2. Start a web browser program (such as Microsoft Internet Explorer).

3. Type the IP address of the IPCP into the browser in the address field and log on to the internal web page (see the **Software-based Configuration and Control** section starting on page 18) or to the optional GlobalViewer web page stored in the IPCP (see the *Global Configurator Help* file for details).

NOTE: If GlobalViewer is installed in the IPCP, the GlobalViewer web pages appear by default.

- GlobalViewer web pages are supported by Internet Explorer, but not by other browsers. GlobalViewer features may not work properly when viewed via Navigator, Mozilla® Firefox®, Google Chrome™, or other browser programs.
- To reach the factory default web pages on a controller that has been set up for GlobalViewer, type `http://<IP address>/nortxe_index.html` into the address field of the browser, substituting the actual IP address for "`<IP address>`". For example, `http://10.13.196.42/nortxe_index.html`.

4. In the factory default web pages:

- Select the **Status** tab. The firmware version is listed in the System Description area as shown at right.

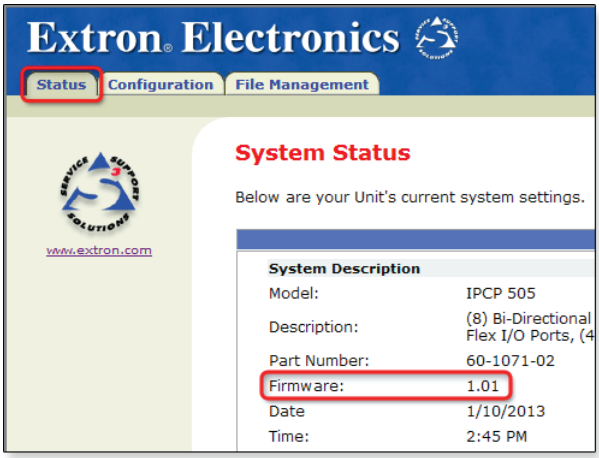

Figure 42. Locating the Current Firmware Version in the Status Embedded Web Page

Or

- Select the **System Settings** page within the **Configuration** tab. The firmware version is listed in the IP Settings area as shown below.

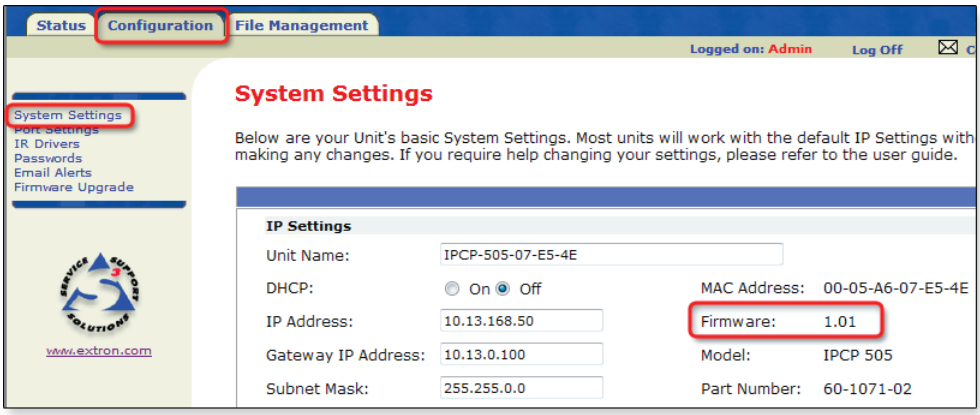

Figure 43. Locating the Current Firmware Version in the System Settings Embedded Web Page

If using GlobalViewer, click the **Type** button in the upper left of the GV page, and click on the **IPCP 505** folder. The firmware version is listed in the Control window.

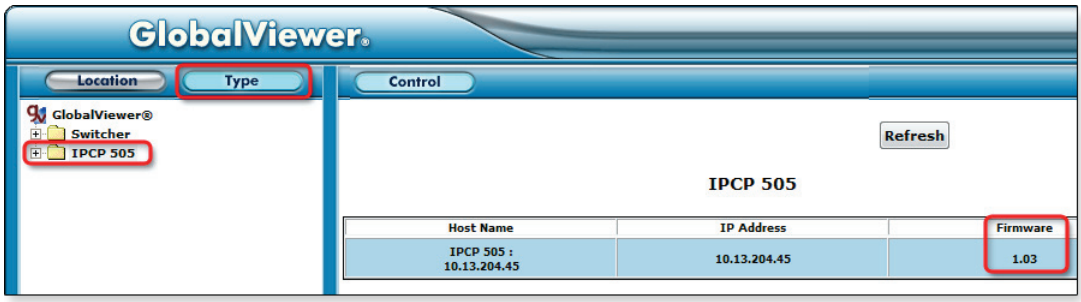

Figure 44. Locating the Current Firmware Version in the GV Control Embedded Web Page

Updating the Main Firmware

Most firmware upgrade tools require the PC and the controller to both be connected to an Ethernet network. The instructions for each method of updating the IPCP firmware assume you have installed the appropriate software on your PC first.

NOTES:

- You should save the existing configuration to a file (see the *Global Configurator Help* file for instructions) before replacing the firmware. If the file is saved, the configuration can be restored to the IPCP later using Global Configurator.
- Check the Extron website (**www.extron.com**) for firmware-related documents, instructions, patch files, and new firmware files before loading new firmware into the controller. We recommend that you read the firmware release notes (available from **www.extron.com**) before beginning the firmware update.

Locating and Downloading the Firmware

1. Visit the Extron website (**www.extron.com**) to find the latest firmware file for the IPCP.
2. Download the executable installer file (`*.exe`) from the website and run the installer program. The program automatically stores the firmware file on the PC in `C:\Program Files\Extron\Firmware\IPCP_5Ø5\xx` (a folder specific to that version).
3. Write down the firmware filename and location for later use. The filename ends in *.s19* such as `IPL_T_Series_19_1364_5Ø_vxx_xx.s19` where xx_xx is the version number (xx.xx) or `IPLtvx.x.x.S19` where x.x.x indicates the version number.

NOTE: The firmware update file must have a filename extension of .s19. If the file does not have that extension, it will not work properly.

Updating Firmware via Extron IP Link File Manager Software

This is the **recommended method** for updating the firmware for an IPCP. It allows you to update one or several IPCPs at a time via an IP connection.

1. Download the `.s19` firmware file.
2. Start the IP Link File Manager (IPLFileManager) software on the connected PC. The main IP Link File Manager window appears on screen, as does the smaller Select Startup Mode window, shown in figure 45.
3. Click one of the **`Select Startup Mode`** buttons to choose how to add an IPCP to the firmware update list, click **`OK`**, and follow any on-screen instructions to add IPCPs.
   - **`Open Configuration File`** — Select this mode to open an existing configuration file.
   - **`Import GC2.x Project`** **(recommended)** — Select this mode to import a GC2.x project file and the names and IP addresses of the devices in it.
   - **`Manually Add IP Link Device(s)`** — Select this mode to add IPCPs individually by IP address.
   - **`Automatically Detect IP Link Device(s)`** — Select this mode to scan the network for IP Link devices, including IPCPs. You may need to provide administrator passwords for some units.
   - **`Use Previous Setup`** — Choose this to show IP Link devices from your previous session of IP Link File Manager.

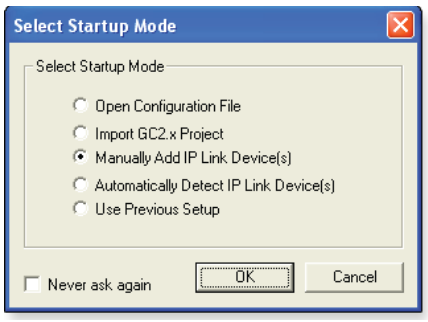

Figure 45. IP Link File Manager Select Startup Mode Window

   See the *IP Link File Manager Help* file if you need additional details on how to use any of those modes.
4. Click on the **`Options`** menu and select **`Reset Device After Firmware Update`**. This option causes the controller to perform a ZY reset, which resets all device settings and deletes all files from the IPCP after the firmware is updated. See **ZY** command details on page 74 in the SIS section.
5. Click on the **`Tools`** menu and select **`Firmware Update Manager`** (see figure 46).

   The Firmware Update Manager window appears.

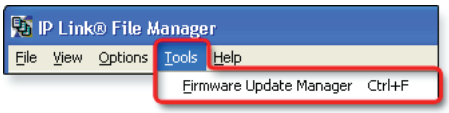

Figure 46. Selecting `Tools` > `Firmware Update Manager`

6. Set the maximum number of firmware uploads that can take place at the same time (see figure 47, ①). The firmware files are uploaded to this many units at a time until all units listed in the Select Device list have received new files. The default is 5 uploads at a time, and the upper limit is the total number of units shown in the Select Device list.

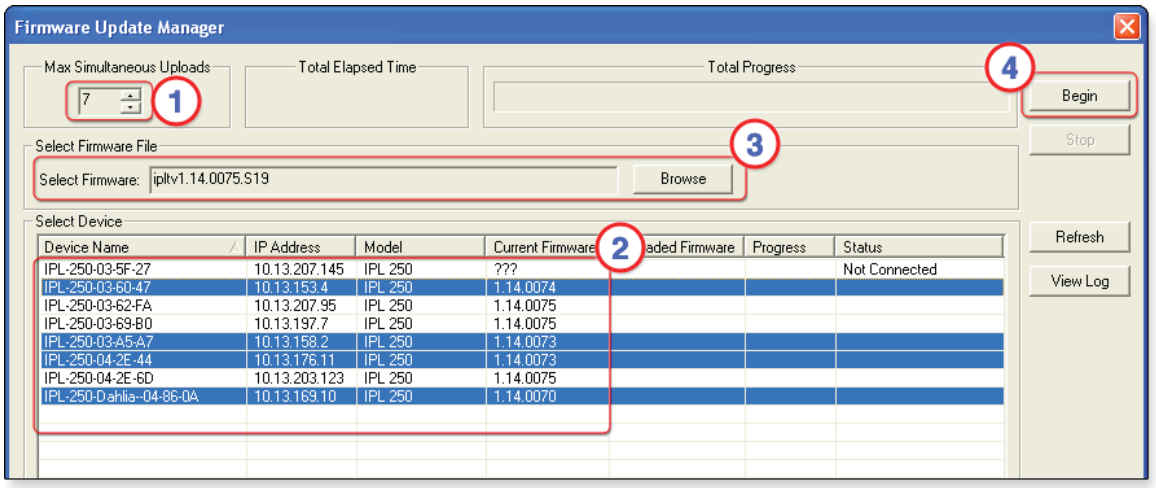

Figure 47. Steps 6 through 9: The Firmware Update Manager Window Prior to Uploading

7. In the Select Device list, select the devices for the firmware update (see figure 47, ②). Figure 47 shows an example of a system with IPL 250 units, but the process is identical for the IPCP.
   - <Ctrl>-click on the name(s) of the unit(s) to select (or deselect) more than one unit in the list.
   - Click on the name of one unit and <Shift>-click on the name of another unit to select those two IPCPs and the IPCPs listed between them.
8. Click **`Browse`** in the Select Firmware File panel (see figure 47, ③), then locate and select the firmware file you downloaded in step 1.
9. Click **`Begin`** (see figure 47, ④), then confirm that you want to start uploading the firmware. The software displays the progress and status of the firmware upload for each unit, then performs a firmware validation before finishing. If uploading fails, you can view the error log by clicking on **`View Log`**. If uploading is successful, the Status column indicates success for each unit.
10. Click **`Close`**.
11. Close the IP Link File Manager software.

Updating Firmware via the IPCP Embedded Web Page

Firmware uploads may be performed via a web browser and the internal web page of the IPCP controller. This method allows you to update one IPCP at a time via an IP connection.

1. Download the .s19 firmware file.
2. Launch a web browser (Microsoft Internet Explorer) on the connected PC and type the IP address of the controller in the address area.

3. If a password was previously set for the controller, an `Enter Network Password`, `Connect to...`, or `Windows Security` dialog box appears. Type the IP address of the controller or type text of your choice in the **`User Name`** field, type in the administrator password in the **`Password`** field, and click **`OK`**. The IPCP default web page appears.

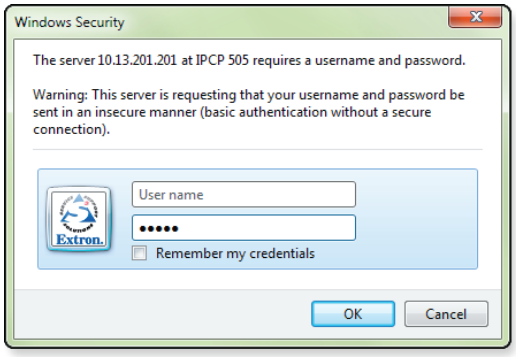

Figure 48. The `Windows Security` Dialog Box

NOTES:

- Passwords must contain 4 to 12 alphanumeric characters. Symbols and spaces are not allowed, and the passwords are case-sensitive.
- If the unit has been previously configured with GC, a GlobalViewer web page appears instead. To access the factory-embedded web page, in the address field of the browser, type the IP address of the unit followed by `\nortxe_index.html`. For example, `10.13.197.9\nortxe_index.html`.

4. Click on the **`Configuration`** tab, then select **`Firmware Upgrade`** from the list on the left of the screen. The Firmware Upgrade screen appears.
5. Click the **`Browse`** button. The `Choose File to Upload` dialog box opens (see figure 49).

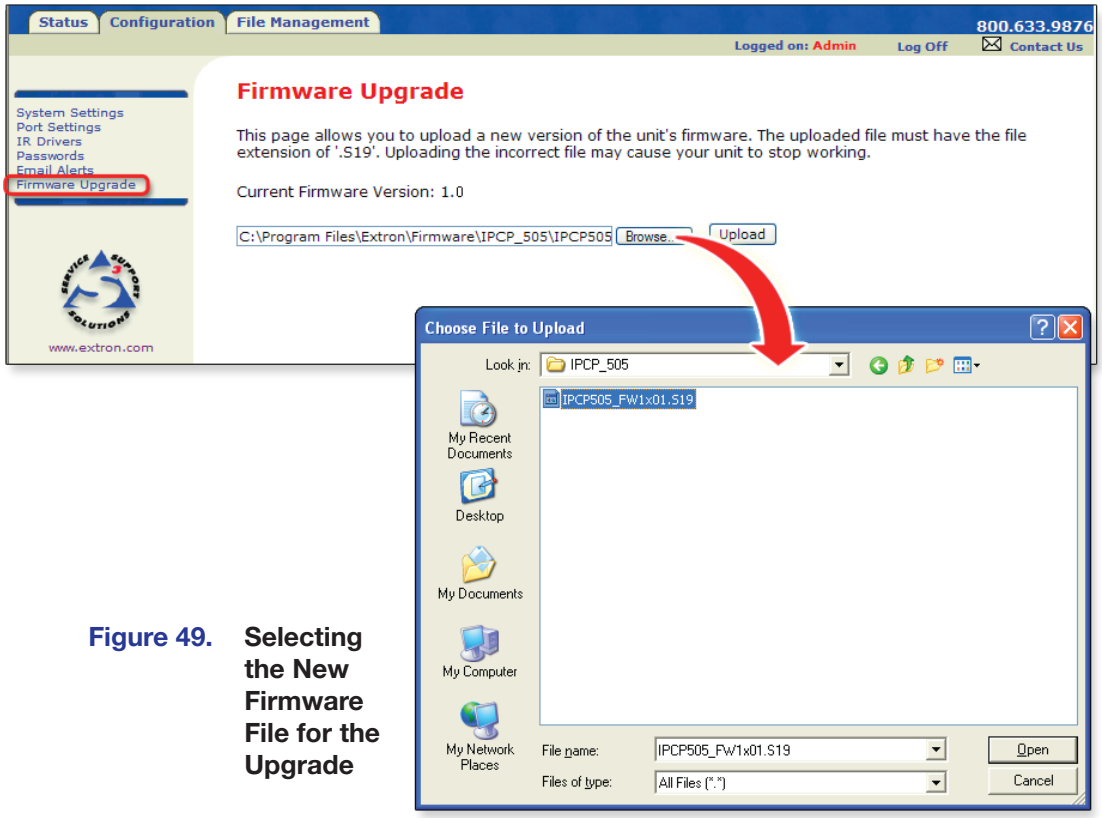

Figure 49. Selecting the New Firmware File for the Upgrade

6. In the `Choose File to Upload` dialog box, locate and select the firmware file (`*.s19`) you downloaded to `C:\Program Files\Extron\Firmware\IPCP_505\xx`, and click the **`Open`** button.

7. Click on the **Upload** button on the web page to upload the firmware to the controller. It takes a while to load the file into the IPCP. You will not see any on-screen indication when the upload has finished. Once the firmware upload is completed, the IPCP performs a reset.
8. If necessary, see **Resetting the Unit** starting on page 16 in for details about manually resetting the controller or see the *Global Configurator Help* file to learn how to restore a configuration to the controller.

Updating Firmware via Extron Firmware Loader Software

This method allows you to update one IPCP at a time via IP communication using Firmware Loader software (available free at **www.extron.com**.

NOTE: The IPCP requires Firmware Loader version 5.0.1 or higher.

1. If not already installed, download Firmware Loader from the Extron website and follow the on-screen instructions to install it.
2. Download the `.s19` firmware file to the PC.
3. Start the Firmware Loader (FWLoader,) software on the connected PC. The Add Device dialog box opens.
4. In the `Add Device` dialog box, choose the type of device (IPCP), the communication type (select **TCP/IP**), and, if necessary, set the communication settings. Enter the IP address of the controller, verify or change the Telnet port number, and enter an administrator password if a password has been set for the unit.

   NOTE: Passwords must contain 4 to 12 alphanumeric characters. Symbols and spaces are not allowed, and the passwords are case sensitive.

5. Click the **Connect** button. If the connection is unsuccessful, an error message is displayed. If the connection is successful, the IPCP model name is displayed within the dialog box and the New Firmware File panel becomes accessible.
6. Click the **Browse** button. The Open window appears.
7. Locate and select the firmware file on your PC that you downloaded for the IPCP, then click the **Open** button. The Open window closes.
8. Click **Add**. The `Add Device` dialog box closes, and the IPCP you just added appears in the device list within the main Firmware Loader window. The version of the currently installed firmware, the name of the firmware file you selected to load onto the unit, and the IP address are also listed.
9. With that IPCP unit selected, click **Begin**. The PC uploads the new firmware to the IPCP. Once the firmware is uploaded, the IPCP restarts events.
10. Firmware Loader displays the new firmware version in the Firmware column.
11. Close or exit Firmware Loader.
12. Verify that the IPCP is connected to the network and is functioning as expected.

Index

Symbols

0.evt 5
.eir
  file type description 77
.eml
  file type description 77
.evt
  file type description 77
.gc2
  file type description 77
.gcz
  file type description 77
/nortxe_index.html
  factory-embedded web pages 36
.s19
  downloading the file for a firmware upgrade 81
  file type description 77
  uploading via the Firmware Upgrade embedded web page 42

A

advanced serial port control 31
application diagram
  system connections 3
ARP command
  using for IP network setup 20
ASCII to decimal conversion table 57
ASCII to hex conversion table 52

B

bootstrap firmware
  SIS command to view version 63
bridging
  serial bridging 33

C

cdc files 43
  description of file type 77
COM1-COM8 RS-232 ports
  use and wiring
    COM1-COM6 12
    COM7, COM8 12
command/response table for SIS commands 57
configuration
  saving and uploading 36
Configuration embedded web page 39
controlling an IPCP 36
crossover network cable
  used for configuration via T elnet 23
custom GUI service 48
customizing control web pages 48

D

defaults
  LAN port 13
  RS-232 protocol for COM ports 12
DHCP
  SIS commands for DHCP modes 65
direct access port map
  setting initial port number, SIS command for 68
direct port access (ports 2001 and up) 32
display control 4
distance
  IR learning distance from remote to IPCP 9
  to display or projector 12
drivers
  customized IR driver files, IR learning and 29
  definition of term 75
  device driver communication sheet 12
  device drivers provided by Extron, also IR learning to make customized drivers 27
  driver subscription feature of Global Configurator 28
  .eir file type 77
  Ethernet drivers 2
  IR learning sensor and creating a device driver file 9
  IR or RS-232 driver file, downloading and using for control 4
  serial bridging and RS-232 driver disabling 34
  viewing information on IR driver files using GC 41

E

eir file type 77
e-mail
  address protocol 28
  .eml file type 77
  file requirements and naming 55
  setting up e-mail alerts via embedded web pages 42
Email Alerts embedded web page 42

embedded web pages
accessing 36
accessing factory-set pages on a unit that also has GV web pages 36
Configuration 39
IR Drivers 41
Port Settings 40
Email Alerts 42
File Management 43
Firmware Upgrade 42
Status 37
System Status 37
updating firmware via 83
eml file type 77
Ethernet drivers
support for 2
Ethernet (LAN) port configuration and use
SIS commands for 59
event (.evt) files
caution 43
description and caution 77
main event file (0.evt) 5
what they are used for, how they interact with hardware and software 5
Extron Firmware Loader software 85
Extron IP Link File Manager software 82

F

file extension
.cdc 43, 77
filtering by 43
.gc2 77
.gcz 77
.s19 77
File Management (embedded web page) 43
file names and types
.cdc 43, 77
.eir 77
.eml 77
event files 5
.evt 77
.gc2 77
.gcz 77
main event file (0.evt) 5
.s19 77
firmware
determining the firmware version 78
SIS commands 62
firmware update file type 77
locating and downloading 81
.s19 file 77
SIS commands for firmware versions 62
updating 30
IP Link File Manager software 82
updating the main firmware 81
via embedded web page 42, 83
via Extron Firmware Loader software 85
Firmware Loader software 85
Firmware Upgrade embedded web page 42, 83
flex I/O ports
description, wiring 15
SIS commands 61

G

gateway IP address
default value 13
resetting to default (reset modes 4 and 5) 17
SIS commands for 65
GC configuration file
*.gc2 77
*.gcz 77
Global Configurator software
GUI configuration report
generating and printing 30
hardware requirements 6
software requirements 6
tabs (pages) within 29
GlobalViewer web pages 44
GUI
customization 48
GUI configuration report
generating and printing 30
GUI Configurator
and TouchLink touchpanels 6, 27
hardware requirements 6
software requirements 6

H

HTML
customization service for IPCP web pages 48

I

IP address
resetting to default (reset modes 4 and 5) 17
IP Link File Manager software 82
IR and RS-232 device control 4
IR drivers
IR driver file type (.eir files) 77
using IR learning to create customized drivers 29
viewing and triggering functions 41
IR Drivers embedded web page and control 41
IR emitters
wiring for use with IR output ports 14
IR Learner software version 29
IR learning
distances and angles 9
frequencies accepted by the controller 9
purpose and software 29
receiver/sensor location and use 9, 29
IR output ports
SIS commands for 60
use and wiring 14
IR signal sensor (IR learning receiver)
location, use, reception angle 9
using to capture IR commands 29

L

LAN (IP) port
cabling, LEDs, and default settings 13
default settings 13, 20
latching
relay description and wiring 15

M

MAC address
description 13
location on panel 11
SIS CH command to read 65
using in an ARP command to set up the unit 20
main event file (0.evt) 5
memory usage
SIS command to request 64

model description
SIS command for model description 63
model name
as shown in the copyright boot-up message 50
SIS command to request 63
modes
DHCP mode and SIS commands 65
IR playback mode variable in SIS commands 60
reset modes and procedures 16
reset mode SIS commands 74
serial communication standard (RS-232/RS-422/RS-485)
SIS commands 58
serial pass-through mode
SIS commands for 59
verbose (description and SIS commands for) 66
momentary
relay description and wiring 15
mounting
UL rack mounting guidelines 10

N

nortxe_index.html factory embedded web pages 36

P

part numbers
SIS command for 63
pass-through
serial pass-through (redirect mode) 32
SIS commands for 59
passwords
IPCP responses to 51
requirements for 41
password length and characters 54
SIS commands for 67
Passwords embedded web page 41
ping
using the ping command in troubleshooting 49
using the ping command with the ARP command in IP setup 21
port mapping
resetting to default (reset modes 4 and 5) 17
Port Settings embedded web page 40
power connector
switched power output port
SIS commands for 62
wiring, polarity, requirements
input power 11
output power 11

R

rack mounting
UL rack mounting guidelines 10
redirect mode
serial pass-through (redirect mode) 32
relay ports
latching: description and wiring 15
momentary contact: description and wiring 15
SIS commands for 61
wiring 15
remapping ports
SIS commands for 68
reserved characters 52
Reset button
Reset button and LED location 9
using to reset the unit 16
resetting the unit
manual reset modes 16
reset after firmware update 82
reset (zap) commands and erase commands (SIS) 74
reset (zap) commands and erase commands (SIS) 74
RS-232, RS-422, RS-485 default protocol and COM port pin configurations 12

S

s19 file type 77
serial bridging 33
hardware connection (cabling) 34
serial bridge configuration 34
serial communication protocol
COM port defaults 12
SIS commands to set protocol for each serial port 58
serial pass-through mode
SIS command to configure 59
serial pass-through (redirect mode) 32
serial ports
advanced control methods 31
direct port access (ports 2001 through 2003) 32
serial bridging 33
serial pass-through (redirect mode) 32
SIS CP command to configure parameters for each port 58
wiring COM ports 12
wiring IR/Serial ports 14
SIS commands
commands and responses 57
helpful tips for entering and encoding 52
symbol definitions for 53
straight-through cable (wiring and when to use) 13
subnet
default value 13
definition of subnet mask 76
resetting to default (reset modes 4 and 5) 17
SIS commands for setting and reading 65
Switched 12 VDC power output port
SIS commands for 62
symbol definitions for SIS commands 53
system requirements 6
System Settings (GlobalViewer web page) 39

T

TouchLink touchpanel
as part of a system with an IPCP 2
overview about using with an IPCP 5
setting up the panel and configuring the IPCP to work with it 47
touchpanel
as part of a system with an IPCP 2
troubleshooting 49

U

Underwriters Laboratories (UL)
UL rack mounting guidelines 10
unit name
definition and parameters 28, 39
SIS CN commands to set or read 64
updating the main firmware 81

V

verbose mode
SIS commands for 66
variables for, and description 54

W

wiring block diagram
printing 30

Z

Zap (reset) commands
SIS commands to reset the unit and/or erase files 74

Extron Warranty

Extron Electronics warrants this product against defects in materials and workmanship for a period of three years from the date of purchase. In the event of malfunction during the warranty period attributable directly to faulty workmanship and/or materials, Extron Electronics will, at its option, repair or replace said products or components, to whatever extent it shall deem necessary to restore said product to proper operating condition, provided that it is returned within the warranty period, with proof of purchase and description of malfunction to:

USA, Canada, South America, and Central America:
Extron Electronics
1230 South Lewis Street
Anaheim, CA 92805
U.S.A.

Japan:
Extron Electronics, Japan
Kyodo Building, 16 Ichibancho
Chiyoda-ku, Tokyo 102-0082
Japan

Europe and Africa:
Extron Europe
Hanzeboulevard 10
3825 PH Amersfoort
The Netherlands

China:
Extron China
686 Ronghua Road
Songjiang District
Shanghai 201611
China

Asia:
Extron Asia Pte Ltd
135 Joo Seng Road, #04-01
PM Industrial Bldg.
Singapore 368363
Singapore

Middle East:
Extron Middle East
Dubai Airport Free Zone
F12, PO Box 293666
United Arab Emirates, Dubai

This Limited Warranty does not apply if the fault has been caused by misuse, improper handling care, electrical or mechanical abuse, abnormal operating conditions, or if modifications were made to the product that were not authorized by Extron.

NOTE: If a product is defective, please call Extron and ask for an Application Engineer to receive an RA (Return Authorization) number. This will begin the repair process.

USA: 714.491.1500 or 800.633.9876
Asia: 65.6383.4400
Europe: 31.33.453.4040
Japan: 81.3.3511.7655

Units must be returned insured, with shipping charges prepaid. If not insured, you assume the risk of loss or damage during shipment. Returned units must include the serial number and a description of the problem, as well as the name of the person to contact in case there are any questions.

Extron Electronics makes no further warranties either expressed or implied with respect to the product and its quality, performance, merchantability, or fitness for any particular use. In no event will Extron Electronics be liable for direct, indirect, or consequential damages resulting from any defect in this product even if Extron Electronics has been advised of such damage.

Please note that laws vary from state to state and country to country, and that some provisions of this warranty may not apply to you.

Extron Headquarters		Extron Europe	Extron Asia	Extron Japan	Extron China	Extron Middle East	Extron Korea	Extron India
+1.800.633.9876 (Inside USA/Canada Only)		+800.3987.6673 (Inside Europe Only)	+65.6383.4400	+81.3.3511.7655	+86.21.3760.1568	+971.4.299.1800	+82.2.3444.1571	1800.3070.3777 (Inside India Only)
Extron USA - West	Extron USA - East	+31.33.453.4040	+65.6383.4664 FAX	+81.3.3511.7656 FAX	+86.21.3760.1566 FAX	+971.4.299.1880 FAX	+82.2.3444.1575 FAX	+91.80.3055.3777
+1.714.491.1500	+1.919.850.1000	+31.33.453.4050 FAX						+91.80.3055.3737 FAX
+1.714.491.1517 FAX	+1.919.850.1001 FAX							

© 2013 Extron Electronics All rights reserved. www.extron.com