Parts Manual

Model 50D Pulp Bale Clamp

Serial Number 50D-PBS-141

cascade® corporation

For Technical Assistance call: 800-227-2233, Fax: 888-329-8207
To Order Parts call: 888-227-2233, Fax: 888-329-0234
OR
Write: Cascade Corporation, P.O. Box 20187, Portland, OR 97220
Internet: www.cascorp.com

Safety Decals

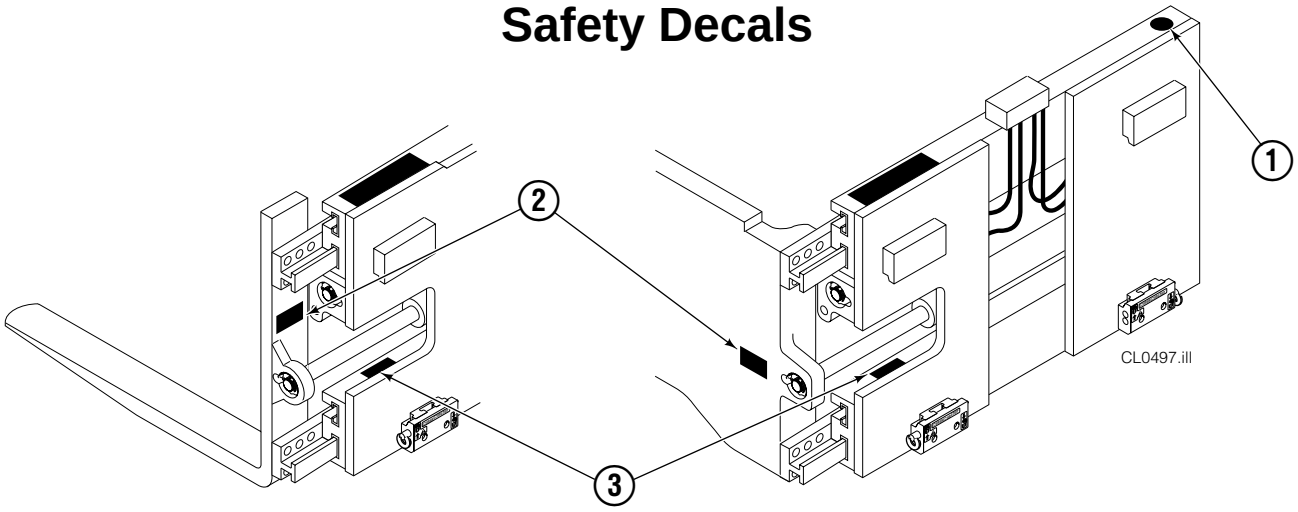



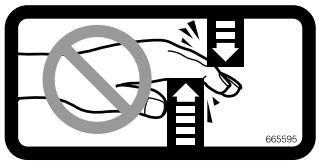

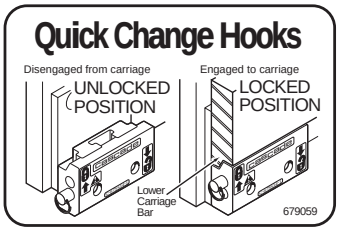

REF	QTY	PART NO.	DESCRIPTION
1	1	679150	No Step Decal
2	2	665595	No Hand Hold Decal
3	1	679059	Quick Change Hook Decal

Publications

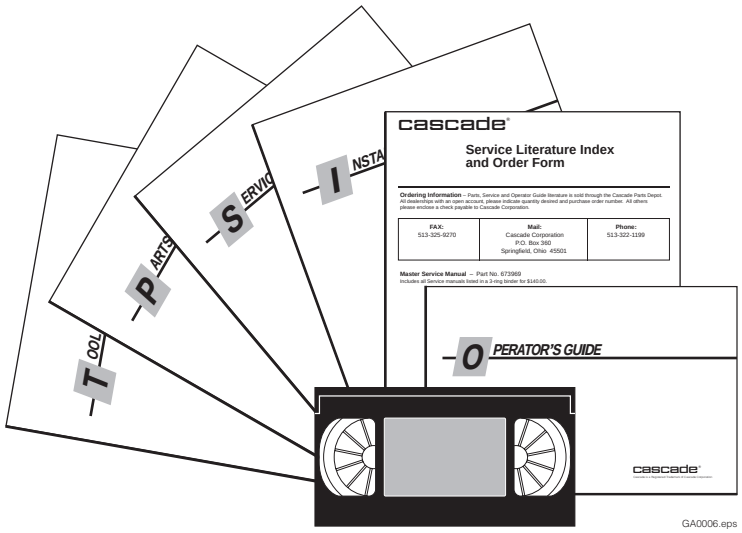

PART NO.	DESCRIPTION
669224	Service Manual
672944	Operators Guide
668987	Installation Instructions
680664	Servicing Cascade Cylinders-VHS
679929	Tool Catalog
673964	Literature Index Order Form

Base Unit Group

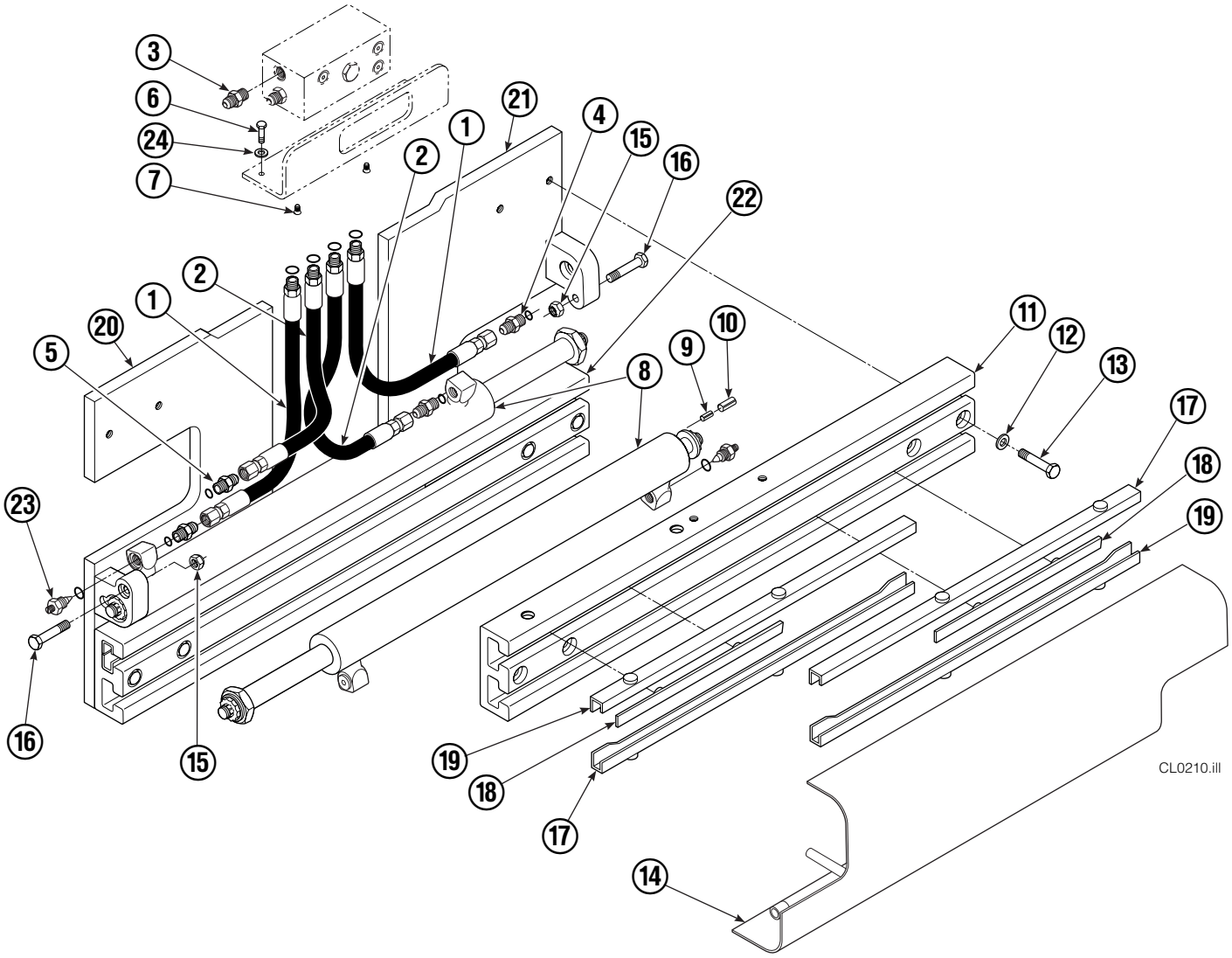

50D							
REF	**QTY**	**PART NO.**	**DESCRIPTION**	**REF**	**QTY**	**PART NO.**	**DESCRIPTION**
		681233	Base Unit Group	13	8	667644	Capscrew
1	2	210436	Hose, 24.75 in.	14	1	667664	Bumper
2	2	210441	Hose, 21.25 in.	15	2	665707	Nut, 1/2 in. ID
3	1	601377	Fitting, 8-8	16	2	640699	Capscrew, 1/2 NC x 2.75
4	2	686369	Fitting	17	4	668904	Bearing
5	2	611288	Fitting, 6-8	18	4	667663	Bearing
6	2	671222	Capscrew, 3/8 NC x .75	19	4	668905	Bearing
7	2	4750	Capscrew, 3/8 NC x .75	20	1	680628	Mounting Plate - RH
8	2	667666	Cylinder ▲	21	1	680627	Mounting Plate - LH
9	2	7882	Roll Pin - Inner	22	1	674167	Frame - Lower
10	2	7961	Roll Pin - Outer	23	2	667609	Restrictor Cartridge ●
11	1	667659	Frame - Upper	24	2	6230	Washer
12	8	667225	Washer				

▲ See Cylinder page for parts breakdown.

● Not included in Base Unit Group.
See Restrictor Cartridge page for parts breakdown.

Reference: SK-5302, Common Parts Group 680839.

Cylinder

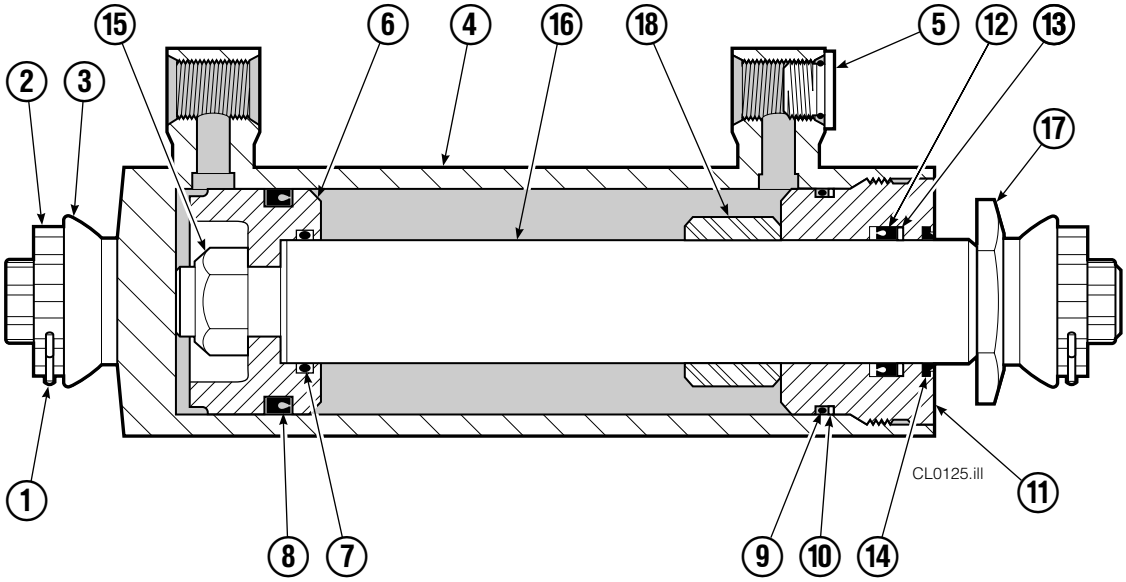

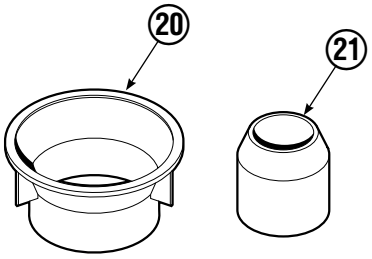

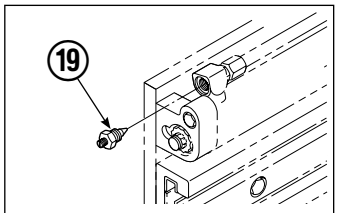

See Restrictor Cartridge Page For Parts Breakdown.

50D			
REF	**QTY**	**PART NO.**	**DESCRIPTION**
		667666	Cylinder Assembly
1	2	6511	■ Cotter Pin
2	2	667667	■ Nut Retainer
3	2	667668	■ Nut
4	1	553760	Shell
5	1	602580	Fitting
6	1	558402	Piston
7	1	2722	▲ O-Ring
8	1	557376	▲ Seal
9	1	2791	▲ O-Ring
10	1	615134	▲ Back-Up Ring
11	1	667675	Retainer
12	1	662451	▲ Seal
13	1	638246	▲ Nylon Ring
14	1	564930	▲ Wiper
15	1	561012	Nut
16	1	667670	Rod
17	1	667676	Washer
18	1	—	Spacer
19	1	667609	Restrictor Cartridge ●
20	1	671049	▲ Seal Loader, Piston
21	1	671052	▲ Seal Loader, Retainer
		667723	Service Kit

▲ Included in Service Kit 667723.

■ Included in Nut Service Kit 668925.

● Not included in Cylinder Assembly.

Reference: S-7666.

Restrictor Cartridge

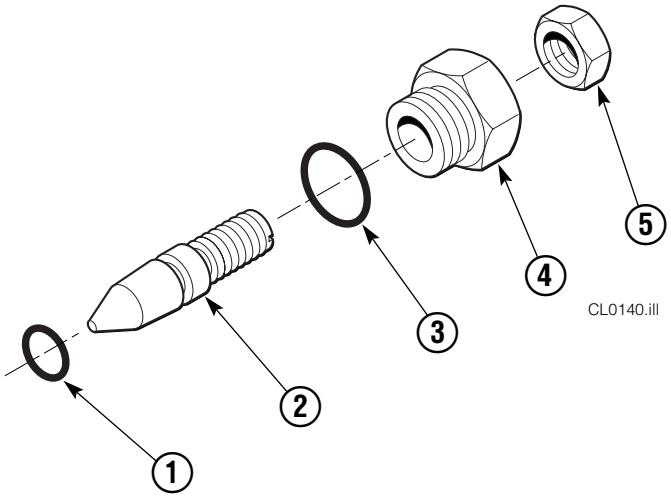

REF	QTY	PART NO.	DESCRIPTION
		667609	Restrictor Cartridge
1	1	2701	O-Ring
2	1	667611	Plunger
3	1	2841	O-Ring
4	1	667610	Plug – Special
5	1	5716	Jam Nut

Valve Group
Sideshift

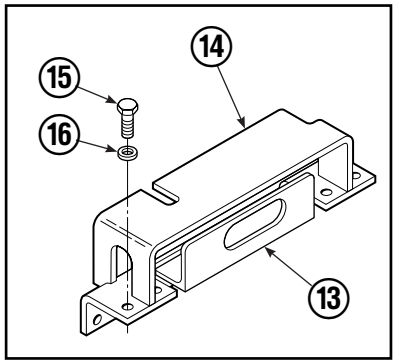

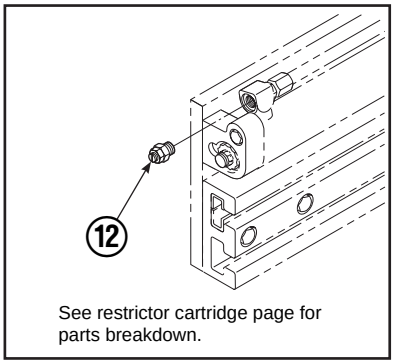

See restrictor cartridge page for parts breakdown.

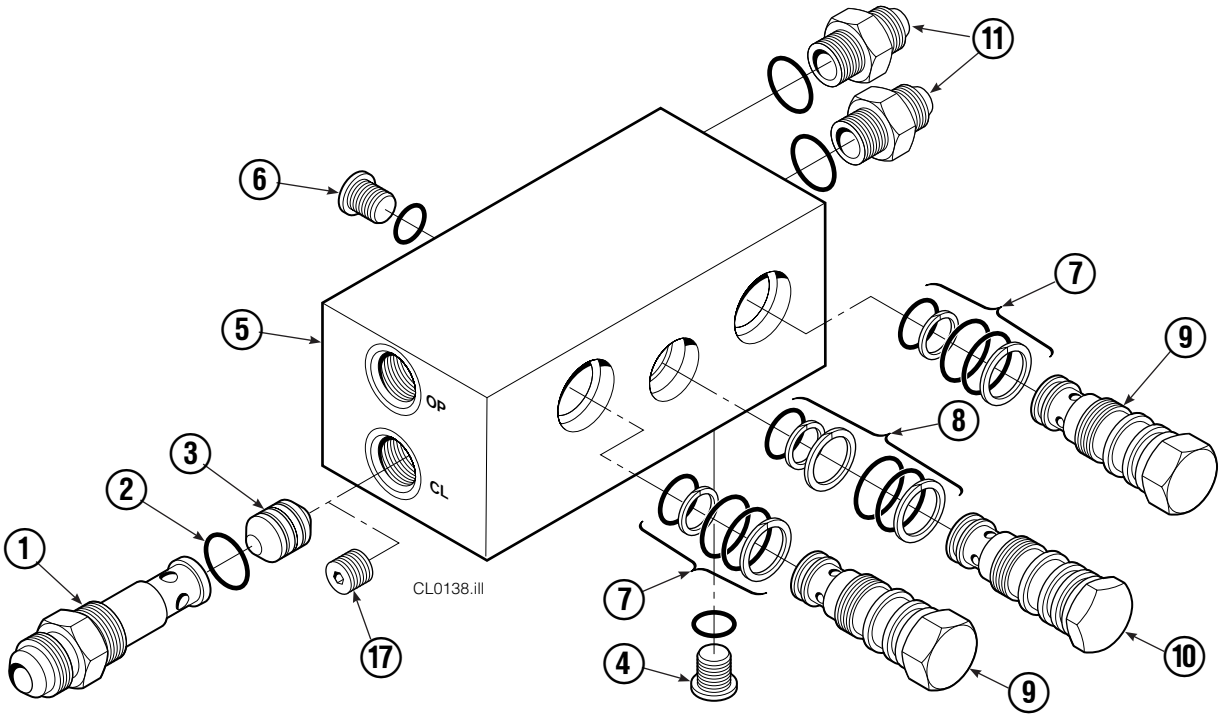

REF	QTY	PART NO.	DESCRIPTION	REF	QTY	PART NO.	DESCRIPTION
		668915	Valve Group – Sideshift	10	1	678270	Check Valve – VPO
		668865	Check Valve – Sideshift ▲	11	2	604511	Fitting, 6-6
1	1	667490	Special Fitting	12	2	667609	Restrictor Cartridge
2	1	2841	O-Ring ●	13	1	669999	Bracket
3	1	667471	Spool	14	1	670002	Guard – 25D/35D
4	3	609455	Fitting, 5	14	1	670000	Guard – 50D
5	1	668866	Valve Body	14	1	200812	Guard – 40D
6	1	604510	Fitting, 6	15	4	677828	Capscrew, 1/2 NC x 1.00
7	2	667516	Service Kit ●	16	4	667910	Washer
8	1	661347	Service Kit ●	17	1	676343	Regeneration Elimination Plug ■
9	2	659058	Check Valve – PO			668868	Service Kit

▲ Includes items 1– 10 only.

● Included in Service Kit 668868.

■ For eliminating regeneration circuit only. See Tech. Bulletin 121.

Reference: SK-5302, Valve Guard Groups 670005, 670006.

Bale Arms

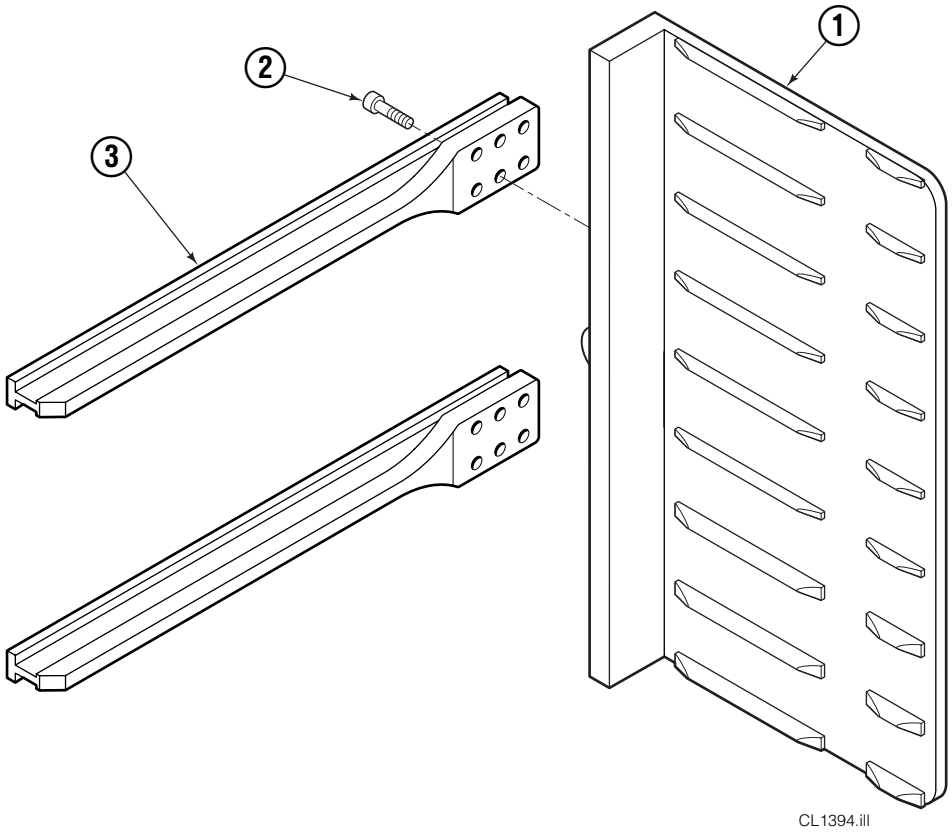

ARM CAPSCREW EXTENSION TOOL Required for Proper Torquing of Capscrews		
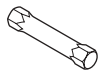	**35D/50D**	**667699**

Left Hand Assembly Shown

50D			
REF	**QTY**	**PART NO.**	**DESCRIPTION**
		6025658	Bale Arm Assembly ●
1	1	6025656	Bale Arm, LH
1	1	6025657	Bale Arm, RH
2	24	607105	Capscrew, 3/4 NC x 2.00
3	4	667700	Arm Bar

● Includes items 1 and 2.

Bolt-On Mounting Group

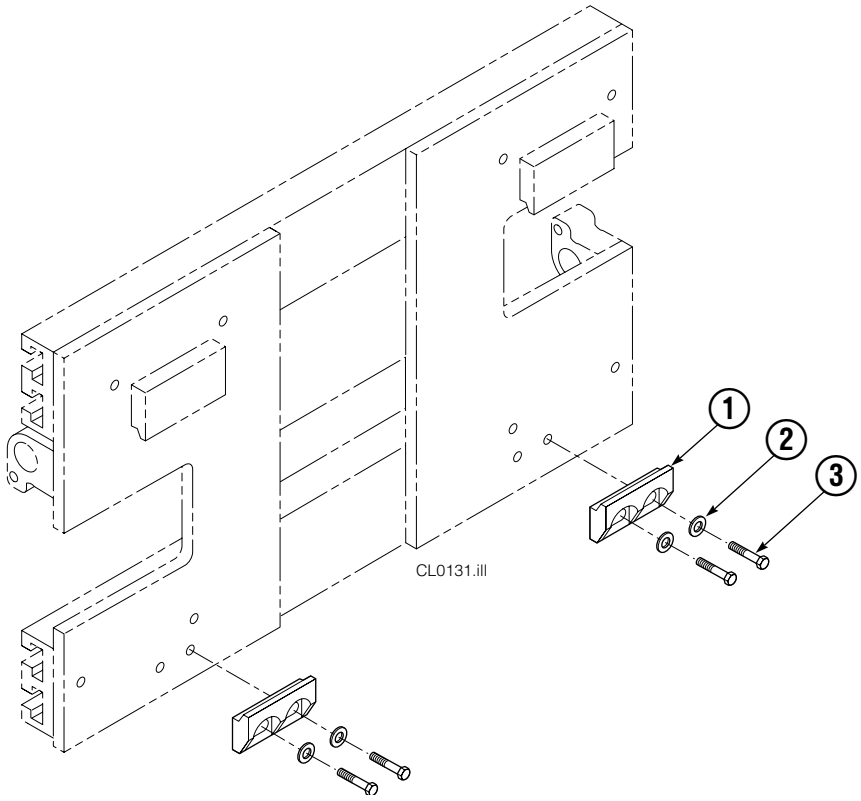

Class III			
REF	**QTY**	**PART NO.**	**DESCRIPTION**
		678935	Lower Hook Group
1	2	675969	Lower Hook
2	4	667225	Washer, 5/8 in. ID
3	4	667369	Capscrew, 5/8 NC x 1.25 GR 5

Reference: S-3197.

Mounting Plates with Bolt-On Upper Hooks

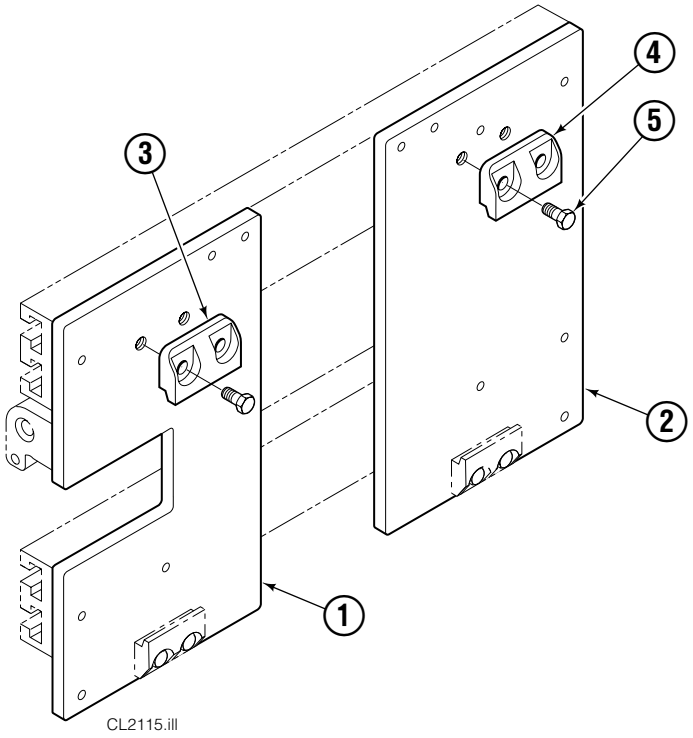

REF	QTY	PART NO.	DESCRIPTION
1	1	680627	Mounting Plate Assembly–LH ●
2	1	680628	Mounting Plate Assembly–RH ■
3	1	6002745	Upper Hook–LH
4	1	211157	Upper Hook–RH
5	4	772193	Capscrew, M20 x 35

● Includes items 3 and 5.
■ Includes items 4 and 5.

Do you have questions you need answered right now? Call your nearest Cascade Parts Department.

Cascade Corporation
2501 Sheridan Avenue
Springfield, OH 45505
Tel: 888-CASCADE (227-2233)
FAX: 888-329-0234
www.cascorp.com

Cascade Canada Inc.
5570 Timberlea Blvd.
Mississauga, Ontario
Canada L4W-4M6
Tel: 905-629-7777
FAX: 905-629-7785

Cascade GmbH
D-41199 Monchengladbach
Klosterhofweg 52
Germany
Tel: 49-216-668230
FAX: 49-216-6682323

Cascade Finland
Albert Petreliuksenkatu 3
01370 Vantaa
Finland
Tel: 358-9-836-1925
FAX: 358-9-836-1935

Cascade N.V.
European Headquarters
P.O. Box 3009
1300 El Almere
Damsluisweg 56
1332 ED Almere
The Netherlands
Tel: 31-36-5492911
FAX: 31-36-5492964

Cascade N.V.
Benelux Sales and Service
P.O. Box 3009
1300 El Almere
Damsluisweg 56
1332 ED Almere
The Netherlands
Tel: 31-36-5492950
FAX: 31-36-5492974

Cascade (UK) Ltd.
15, Orgreave Crescent
Dore House Industrial Estate
Handsworth
Sheffield S13 9NQ
England
Tel: 742-697524
FAX: 742-695121

Cascade Scandinavia AB
Box 124
Hammarvägen 10
567 23 Vaggeryd
Sweden
Tel: 42-0-393-36950
FAX: 46-0-393-36959

Cascade Norway
Østerliveien 37A
1153 Oslo
Norway
Tel: 47-22-743160
FAX: 47-22-743157

Cascade France S.A.R.L.
1D Rue De Charaintru
BP 18, 91360 Epinay-Sur-Orge
Morangis Cedex, France
Tel: 33-1- 64547500
FAX: 33-1-64547501

Cascade Hispania S.A.
Carrer 5 Sector C
Zona Franca Duanera
Poligono de la Zon Franca
08040 Barcelona, Spain
Office No. 256
Tel: 93-264-07-30
FAX: 93-264-07-31

Cascade Japan Ltd.
5-5-41,
Torikai Kami
Settsu, Osaka
Japan, 566
Tel: 81-726-53-3490
FAX: 81-726-53-3497

Cascade Korea
108B, Namdong Ind Complex
658-3 Gojan-Dong
Namdong-Gu
Inchon, 405-310 Korea
Tel: 82-32-821-2051
FAX: 82-32-821-2055

Cascade Australia
1445 Ipswich Road
Rocklea, QLD 4106
Australia
Tel: 1-800227-223
FAX: (07) 3373-7333

Cascade New Zealand
15 Ra Ora Drive
East Tamaki, Auckland
New Zealand
Tel: 9-273-9136
FAX: 9-273-9137

Cascade (Africa) Pty. Ltd.
P.O. Box 625, Isando 1600
60A Steel Road
Sparton, Kempton Park
South Africa
Tel: 27-11-975-9240
FAX: 27-11-394-1147

Cascade-Xiamen
No. 668 Yangguang Rd.
Xinyang Industrial Zone
Haicang, Xiamen City
Fujian Province
P.R. China 361026
Tel: 86-592-651-2500
FAX: 86-592-651-2571

Cascade (Singapore)
Trading Co.
Four Seasons Park
Autumn Block - Apt. 1802
12 Cuscaden Walk
Singapore
Tel: 65-834-1935
FAX: 65-834-1936

cascade™

© Cascade Corporation 2002

8-2002