Gaggenau

en Information for Use

zh-hk 使用手冊

RB 280

Fridge-freezer

組合式冷凍冷藏冰箱

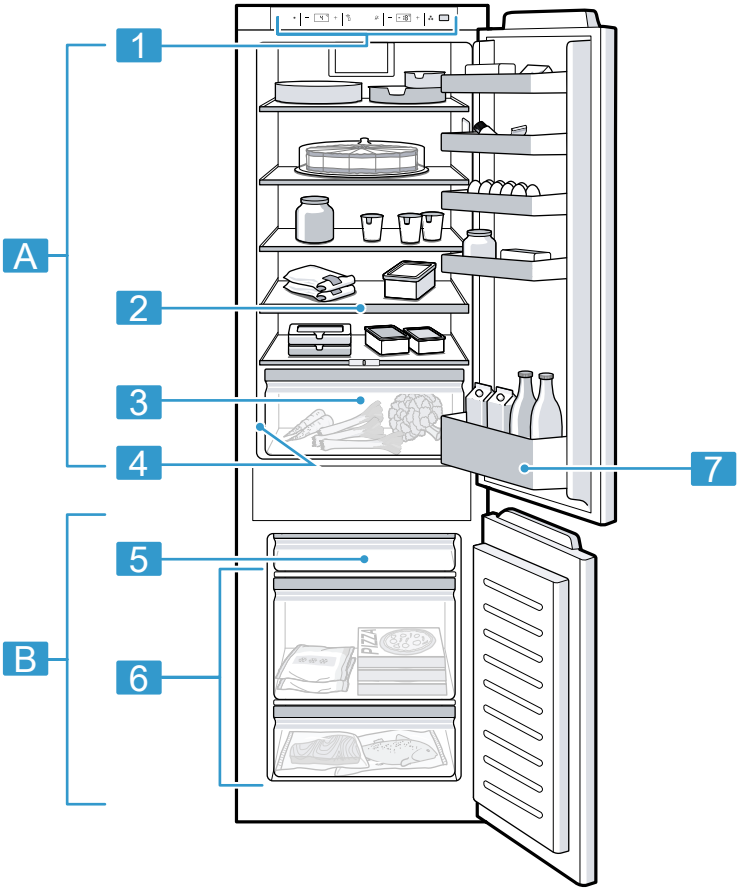

1

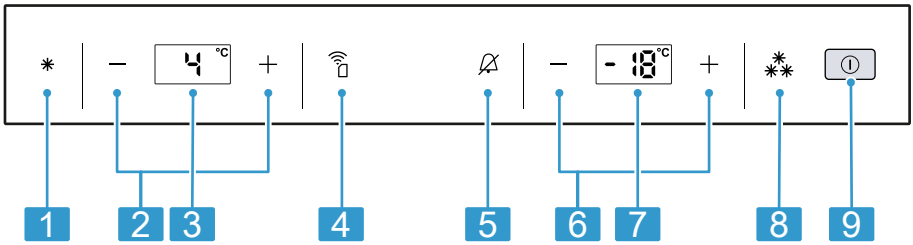

2

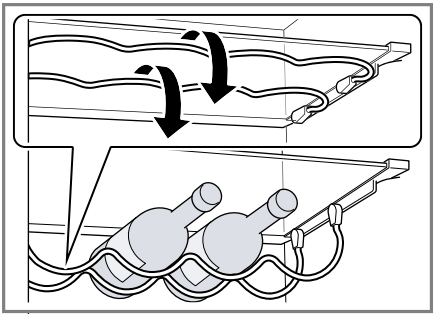

3

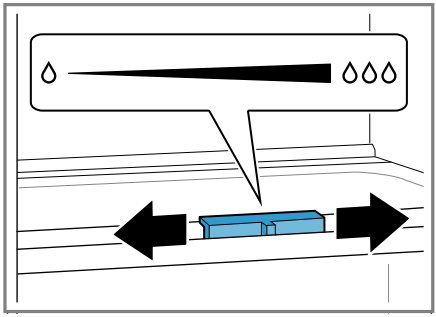

4

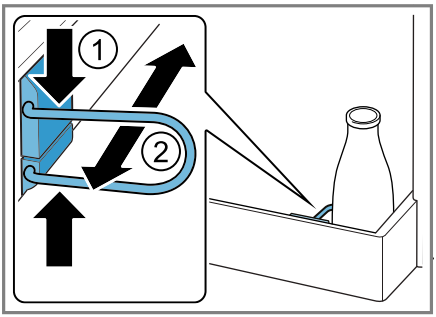

5

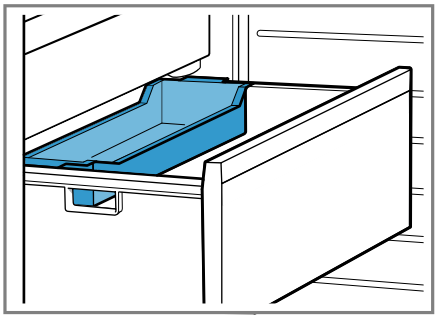

6

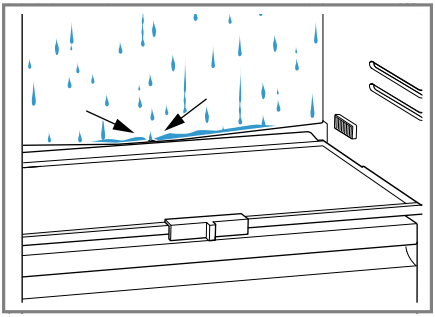

7

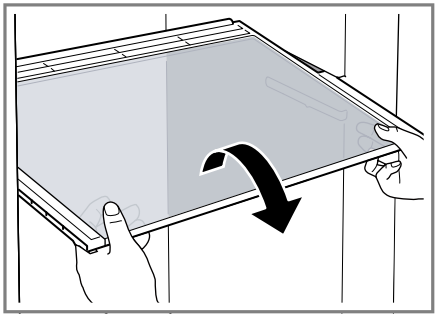

8

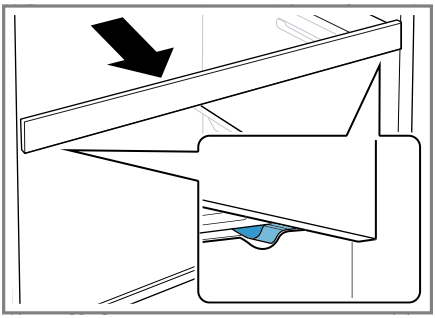

9

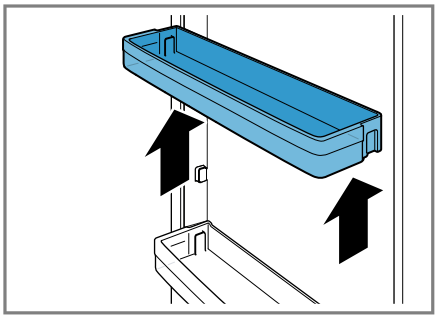

10

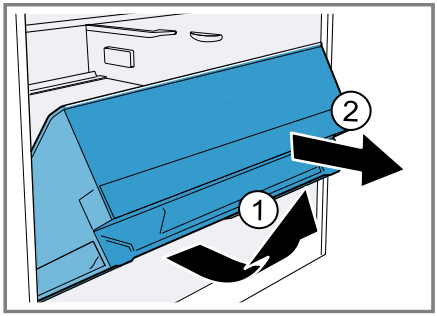

11

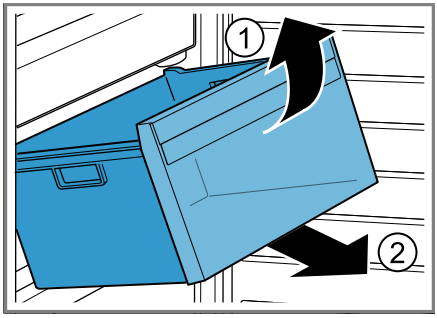

12

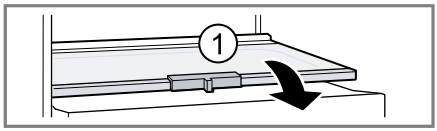

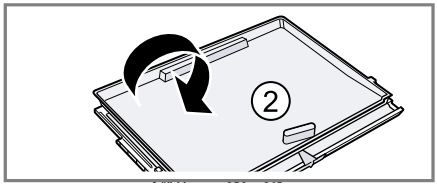

13

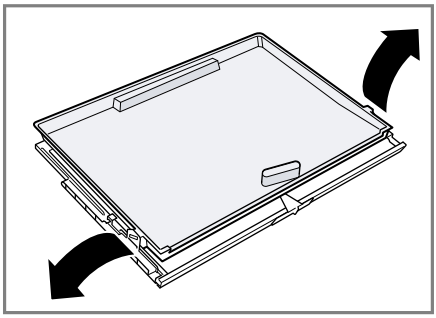

14

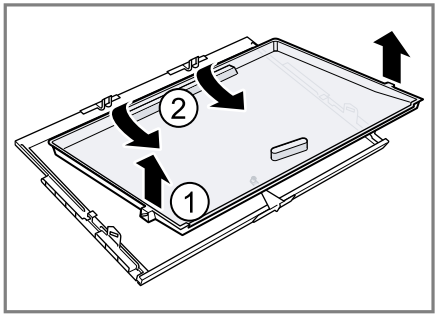

15

Table of contents

1 Safety 7
1.1 General information 7
1.2 Intended use 7
1.3 Restriction on user group 7
1.4 Safe transport 7
1.5 Safe installation 8
1.6 Safe use 9
1.7 Damaged appliance 11

2 Preventing material damage 12

3 Environmental protection and saving energy 12
3.1 Disposing of packaging 12
3.2 Saving energy 12

4 Installation and connection 12
4.1 Scope of delivery 12
4.2 Criteria for the installation location 13
4.3 Installing the appliance 14
4.4 Preparing the appliance for the first time 14
4.5 Connecting the appliance to the electricity supply 14

5 Familiarising yourself with your appliance 14
5.1 Appliance 14
5.2 Control panel 14

6 Features 15
6.1 Shelf 15
6.2 Extendable shelf 15
6.3 Folding bottle shelf 15
6.4 Fruit and vegetable container with humidity control 15
6.5 Flat frozen food container 15
6.6 Door rack 15
6.7 Accessories 15

7 Basic operation 16
7.1 Switching on the appliance 16
7.2 Operating tips 16
7.3 Switching off the appliance 16
7.4 Setting the temperature 17

8 Additional functions 17
8.1 Fast cooling 17
8.2 Automatic Fast freezing 17
8.3 Manual Fast freezing 17
8.4 Holiday mode 18

9 Alarm 18
9.1 Door alarm 18
9.2 Temperature alarm 18

10 Home Connect 19
10.1 Setting up Home Connect 20
10.2 Checking the signal strength 20
10.3 Installing updates for the Home Connect software 20
10.4 Resetting Home Connect settings 21
10.5 Data protection 21

11 Refrigerator compartment 21
11.1 Tips for storing food in the refrigerator compartment 21
11.2 Chill zones in the refrigerator compartment 22
11.3 "OK" sticker 22

12 Freezer compartment 22
12.1 Freezing capacity 22
12.2 Fully utilising the freezer compartment volume 23
12.3 Tips for storing food in the freezer compartment 23
12.4 Tips for freezing fresh food 23
12.5 Shelf life of frozen food at −18 °C 23
12.6 Defrosting methods for frozen food 23

13 Defrosting 24
13.1 Defrosting in the refrigerator compartment 24
13.2 Defrosting in the freezer compartment 24

14 Cleaning and servicing 25
14.1 Preparing the appliance for cleaning 25
14.2 Cleaning the appliance 25
14.3 Cleaning the condensation channel and drainage hole 26
14.4 Removing the fittings..... 26
14.5 Removing appliance components..... 26

15 Troubleshooting..... 27
15.1 Power failure..... 30
15.2 Conducting an appliance self-test 30

16 Storage and disposal 30
16.1 Taking the appliance out of operation 30
16.2 Disposing of old appliance 30

17 Customer Service..... 31
17.1 Product number (E-Nr.) and production number (FD)..... 31

18 Technical data 31

19 Declaration of Conformity 31

1 Safety

Observe the following safety instructions.

1.1 General information

- Read this instruction manual carefully.
- Keep the instruction manual and the product information safe for future reference or for the next owner.
- Do not connect the appliance if it has been damaged in transit.

1.2 Intended use

This appliance is only intended to be fully fitted in a kitchen.
Only use this appliance:
- for chilling and freezing food and for making ice cubes.
- In private households and in enclosed spaces in a domestic environment.
- Up to an altitude of 2000 m above sea level.

1.3 Restriction on user group

This appliance may be used by children aged 8 or over and by people who have reduced physical, sensory or mental abilities or inadequate experience and/or knowledge, provided that they are supervised or have been instructed on how to use the appliance safely and have understood the resulting dangers.
Do not let children play with the appliance.
Cleaning and user maintenance must not be performed by children unless they are being supervised.

1.4 Safe transport

⚠ **WARNING – Risk of injury!**
The high weight of the appliance may result in injury when lifted.
▸ Do not lift the appliance on your own.

1.5 Safe installation

⚠ WARNING – Risk of electric shock!

Incorrect installation is dangerous.

- Connect and operate the appliance only in accordance with the specifications on the rating plate.
- Connect the appliance to a power supply with alternating current only via a properly installed socket with earthing.
- The protective conductor system of the domestic electrical installation must be properly installed.
- Never equip the appliance with an external switching device, e.g. a timer or remote control.
- When the appliance is installed, the mains plug of the power cord must be freely accessible. If free access is not possible, an all-pole isolating switch must be installed in the permanent electrical installation according to the installation regulations.
- When installing the appliance, check that the power cable is not trapped or damaged.

If the insulation of the power cord is damaged, this is dangerous.

- Never let the power cord come into contact with heat sources.

⚠ WARNING – Risk of explosion!

If the appliance's ventilation openings are sealed, a leak in the refrigeration circuit may result in a flammable mixture of gas and air.

- Keep ventilation openings, in the appliance enclosure or in the built-in structure, clear of obstruction.

⚠ WARNING – Risk of fire!

It is dangerous to use an extended power cord and non-approved adapters.

- Do not use extension cables or multiple socket strips.
- Only use adapters and power cords approved by the manufacturer.
- If the power cord is too short and a longer one is not available, please contact an electrician to have the domestic installation adapted.

Portable multiple socket strips or portable power supply units may overheat and cause a fire.

- Do not place portable multiple socket strips or power supply units on the back of the appliance.

1.6 Safe use

⚠ WARNING – Risk of electric shock!

An ingress of moisture can cause an electric shock.

- Only use the appliance in enclosed spaces.
- Never expose the appliance to intense heat or humidity.
- Do not use steam- or high-pressure cleaners to clean the appliance.

⚠ WARNING – Risk of suffocation!

Children may put packaging material over their heads or wrap themselves up in it and suffocate.

- Keep packaging material away from children.
- Do not let children play with packaging material.

Children may breathe in or swallow small parts, causing them to suffocate.

- Keep small parts away from children.
- Do not let children play with small parts.

⚠ WARNING – Risk of explosion!

If the cooling circuit is damaged, flammable refrigerant may escape and explode.

- To accelerate the defrosting process, do not use any other mechanical devices or means other than those recommended by the manufacturer.
- If food is stuck to the freezer compartment, loosen it with a blunt implement such as the handle of a wooden spoon.

Products which contain flammable propellants and explosive substances may explode, e.g. spray cans.

- Do not store products which contain flammable propellants (e.g. spray cans) or explosive substances in the appliance.

⚠ WARNING – Risk of fire!

Electrical devices within the appliance may cause a fire, e.g. heaters or electric ice makers.

- Do not operate electrical devices within the appliance.

⚠ WARNING – Risk of injury!

Containers that contain carbonated drinks may burst.

- Do not store containers that contain carbonated drinks in the freezer compartment.

Injury to the eyes caused by escaping flammable refrigerant and hazardous gases.

- Do not damage the tubes of the refrigerant circuit or the insulation.

⚠ WARNING – Risk of cold burns!

Contact with frozen food and cold surfaces may cause burns by refrigeration.

- Never put frozen food straight from the freezer compartment into your mouth.
- Avoid prolonged contact of the skin with frozen food, ice and surfaces in the freezer compartment.

⚠ CAUTION – Risk of harm to health!

To prevent food from being contaminated, you must observe the following instructions.

- If the door is open for an extended period of time, this may lead to a considerable temperature increase in the compartments of the appliance.
- Regularly clean the surfaces that may come into contact with food and accessible drain systems.
- Store raw meat and fish in suitable containers in the refrigerator so that they do not touch or drip on other food.
- If the fridge/freezer is empty for an extended period of time, switch off the appliance, defrost it, clean it and leave the door open to prevent the formation of mould.

Metal or metal-style parts in the appliance may contain aluminium. If acidic food comes into contact with aluminium in the appliance, aluminium foil ions may pass into the food.

- Do not consume soiled food.

1.7 Damaged appliance

⚠ WARNING – Risk of electric shock!

If the appliance or the power cord is damaged, this is dangerous.

- Never operate a damaged appliance.
- Never pull on the power cord to unplug the appliance. Always unplug the appliance at the mains.
- If the appliance or the power cord is damaged, immediately unplug the power cord or switch off the fuse in the fuse box.
- Call customer services. → *Page 31*

Incorrect repairs are dangerous.

- Repairs to the appliance should only be carried out by trained specialist staff.
- Only use genuine spare parts when repairing the appliance.
- If the power cord of this appliance is damaged, it must be replaced by the manufacturer, the manufacturer's Customer Service or a similarly qualified person in order to prevent any risk.

⚠ WARNING – Risk of fire!

If the tubes are damaged, flammable refrigerant and harmful gases may escape and ignite.

- Keep naked flames and ignition sources away from the appliance.
- Ventilate the room.
- Switch off the appliance. → *Page 16*
- Unplug the appliance from the mains or switch off the circuit breaker in the fuse box.
- Call after-sales service. → *Page 31*

2 Preventing material damage

ATTENTION!
Using the base, runners or appliance doors as a seat surface or climbing surface may damage the appliance.
- ▸ Do not stand or support yourself on the base, runners or doors.

Contamination with oil or fat may cause plastic parts and door seals to become porous.
- ▸ Keep plastic parts and door seals free of oil and grease.

Metal or metal-style parts in the appliance may contain aluminium. Aluminium reacts when it comes into contact with acidic foods.
- ▸ Do not store unpackaged food in the appliance.

3 Environmental protection and saving energy

3.1 Disposing of packaging

The packaging materials are environmentally compatible and can be recycled.
- ▸ Sort the individual components by type and dispose of them separately.

3.2 Saving energy

If you follow these instructions, your appliance will use less power.

Selecting the installation location

- Keep the appliance out of direct sunlight.
- Install the appliance as far away as possible from heating elements, cookers and other heat sources:
  - Maintain a 30 mm clearance to electric or gas cookers.
  - Maintain a 300 mm clearance to oil or solid-fuel cookers.
- Use a niche depth of 560 mm.
- Never cover or block the external ventilation openings.

Saving energy during use

Note: The arrangement of the fittings does not affect the energy consumption of the appliance.

- Open the appliance only briefly and then close it carefully.
- Never cover or block the interior ventilation openings or the exterior ventilation openings.
- Transport purchased food in a cool bag and place in the appliance quickly.
- Allow warm food and drinks to cool down before storing them.
- Thaw frozen food in the refrigerator compartment to utilise the low temperature of the food.
- Always leave some space between the food and to the back panel.
- Defrost the freezer compartment regularly.

4 Installation and connection

4.1 Scope of delivery

After unpacking all parts, check for any transport damage and for completeness of delivery.
If you have any complaints, contact your dealer or our after-sales service → *Page 31*.

The delivery consists of the following:
- Built-in appliance
- Equipment and accessories[1]
- Installation material
- Installation instructions
- User manual
- Customer service directory
- Warranty enclosure[2]
- Energy label
- Information on energy consumption and noises
- Information about Home Connect

4.2 Criteria for the installation location

⚠ **WARNING**
Risk of explosion!
If the appliance is in a space that is too small, a leak in the refrigeration circuit may result in a flammable mixture of gas and air.
- ▸ Only install the appliance in a space with a volume of at least 1 m^3 per 8 g refrigerant. The volume of refrigerant is indicated on the rating plate. → *Fig.* 1/4

The weight of the appliance ex works may be up to 75 kg depending on the model.
The subfloor must be sufficiently stable to bear the weight of the appliance.

Permitted room temperature

The permitted room temperature depends on the appliance's climate class.
The climate class can be found on the rating plate. → *Fig.* 1/4

Climate class	Permitted room temperature
SN	10 °C to 32 °C
N	16 °C to 32 °C
ST	16 °C to 38 °C
T	16 °C to 43 °C

The appliance is fully functional within the permitted room temperature.
If an appliance with climate class SN is operated at colder room temperatures, the appliance will not be damaged up to a room temperature of 5 °C.

Niche dimensions

Observe the niche dimensions if you install your appliance in the niche. If this is not the case, problems may occur when installing the appliance.

Niche depth

Install the appliance in the recommended niche depth of 560 mm.
If the niche depth is smaller, the energy consumption increases slightly.
The niche depth must be a minimum 550 mm.

Niche width

An inside niche width of at least 560 mm is required for the appliance.

Over-and-under and side-by-side installation

If you want to install 2 refrigerating appliances one over the other or side by side, you must maintain a clearance of at least 150 mm between the appliances. Selected appliances can be installed without a minimum clearance. Ask your dealer or kitchen planner about this.

[1] Depending on the appliance specifications

[2] Not in all countries

4.3 Installing the appliance

- Install the appliance in accordance with the enclosed installation instructions.

4.4 Preparing the appliance for the first time

1. Remove the informative material.
2. Remove the protective foil and transit bolts, e.g. remove the adhesive strips and carton.
3. Clean the appliance for the first time. → *Page 25*

4.5 Connecting the appliance to the electricity supply

1. Insert the mains plug of the appliance's power cable in a socket nearby.

   The connection data of the appliance can be found on the rating plate. → *Fig.* 1/ 4
2. Check the mains plug is inserted properly.

✔ The appliance is now ready for use.

5 Familiarising yourself with your appliance

5.1 Appliance

You can find an overview of the parts of your appliance here.
→ *Fig.* 1

A	Refrigerator compartment → *Page 21*
B	Freezer compartment → *Page 22*
1	Control panel → *Page 14*
2	Extendable shelf → *Page 15*
3	Fruit and vegetable container with humidity control → *Page 15*
4	Rating plate → *Page 31*
5	Flat frozen food container → *Page 15*
6	Frozen food container → *Page 26*
7	Door storage compartment for large bottles → *Page 15*

Note: Deviations between your appliance and the diagrams may differ with regard to their features and size.

5.2 Control panel

You can use the control panel to configure all functions of your appliance and to obtain information about the operating status.
→ *Fig.* 2

1	✳ (Refrigerator compartment) switches Fast cooling on or off.
2	—/+ (Refrigerator compartment) sets the temperature of the refrigerator compartment.
3	Displays the set temperature for the refrigerator compartment in °C.
4	opens the menu for setting Home Connect.
5	switches the warning signal off.
6	—/+ (Freezer compartment) sets the temperature of the freezer compartment.
7	Displays the set temperature for the freezer compartment in °C.

8	⁂ (Freezer compartment) switches Fast freezing on or off.
9	⏻ switches the appliance on or off.

6 Features

The features of your appliance depend on the model.

6.1 Shelf

To vary the shelf as required, you can remove the shelf and re-insert it elsewhere.
→ *"Removing the shelf", Page 26*

6.2 Extendable shelf

In order to achieve an improved overview and to remove food more quickly, pull out the extendable shelf.

6.3 Folding bottle shelf

Store bottles securely on the folding bottle shelf.
To use the bottle shelf, fold the metal bracket down.
→ *Fig.* **3**

6.4 Fruit and vegetable container with humidity control

Store fresh fruit and vegetables loose in the fruit and vegetable container. Cover any chopped fruit and vegetables, or store in air-tight packaging. You can adjust the humidity in the fruit and vegetable container using the humidity controller and a special seal. This allows fresh fruit and vegetables to be stored for up to twice as long as with conventional storage.
→ *Fig.* **4**

The air humidity in the fruit and vegetable container can be set according to the type and amount of food to be stored by moving the humidity controller:

- Low humidity 💧 required when primarily storing fruit or mixed items, or if the appliance is very full.
- High humidity 💧💧💧 required when primarily storing vegetables or when the appliance is not very full.

Condensation may form in the fruit and vegetable container depending on the food and quantity stored. Remove the condensation with a dry cloth and adjust the air humidity to a lower setting using the humidity controller.
To ensure that the quality and aroma are retained, store fruit and vegetables that are sensitive to cold outside of the appliance at temperatures of approx. 8 °C to 12 °C, e.g. pineapple, bananas, citrus fruits, cucumbers, courgettes, peppers, tomatoes and potatoes.

6.5 Flat frozen food container

Store flat frozen items, the ice storage container and the ice scoop in the flat frozen food container.

6.6 Door rack

To adjust the door rack as required, you can remove the door rack and re-insert elsewhere.
→ *"Removing door rack", Page 26*

6.7 Accessories

Use original accessories. These have been made especially for your appliance.
The accessories for your appliance depend on the model.

Egg tray

Store eggs safely on the egg tray.

Bottle holder

The bottle holder prevents bottles from falling over when the appliance door is opened and closed.
Press the metal bracket together ① and slide the bottle tray as close to the bottle as possible ②.
→ *Fig.* 5

Freezer tray

You can freeze smaller quantities of food quickly in the freezer drawer, e.g. berries, pieces of fruit, herbs and vegetables.
→ *Fig.* 6
Distribute the frozen food evenly in the frozen food tray and allow to freeze for approx. 10 to 12 hours. Then place in a freezer bag or a freezer box.

Ice pack

Use the ice pack for temporarily keeping food cool, e.g. in a cool bag.

Tip: If a power failure or malfunction occurs, the ice pack can be used to slow down the thawing process for the stored frozen food.

Ice cube tray

Use the ice cube tray to make ice cubes.

Making ice cubes

Use only drinking water to make ice cubes.

1. Fill the ice cube tray with drinking water up to ¾ and place in the freezer compartment.

   If the ice cube tray is stuck to the freezer compartment, loosen it with a blunt implement only (e.g. spoon handle).

2. To loosen the ice cubes, twist the ice cube tray slightly or hold it briefly under flowing water.

7 Basic operation

7.1 Switching on the appliance

1. Press ①.
✔ The appliance begins to cool.
✔ A warning signal sounds, the temperature display (freezer compartment) flashes and 🔕 lights up because the freezer compartment is still too warm.
2. Switch off the warning tone using 🔕.
✔ 🔕 goes out as soon as the set temperature has been reached.
3. Set the required temperature.
→ *Page 17*

7.2 Operating tips

- Once you have switched on the appliance, the set temperature is only reached after several hours. Do not put any food in the appliance until the set temperature has been reached.
- The housing around the freezer compartment is temporarily heated slightly. This prevents condensation in the area of the door seal.
- When you close the door, a vacuum may be created. The door is then difficult to open again. Wait a moment until the vacuum is offset.

7.3 Switching off the appliance

▸ Press ①.

7.4 Setting the temperature

Setting the refrigerator compartment temperature

- Press —/+ (Refrigerator compartment) repeatedly until the temperature display (refrigerator compartment) shows the required temperature.

  The recommended temperature in the refrigerator compartment is 4 °C.
  → *""OK" sticker", Page 22*

Setting the freezer compartment temperature

- Press —/+ (Freezer compartment) repeatedly until the temperature display (freezer compartment) shows the required temperature.

  The recommended temperature in the freezer compartment is −18 °C.

8 Additional functions

8.1 Fast cooling

With Fast cooling, the refrigerator compartment cools as cold as possible.
Switch on Fast cooling before placing large quantities of food.

Note: When Fast cooling is switched on, increased noise may occur.

Switching on Fast cooling

- Press ✳ (Refrigerator compartment).
- ✔ ✳ (Refrigerator compartment) lights up.

Note: After approx. 15 hours, the appliance switches to normal operation.

Switching off Fast cooling

- Press ✳ (Refrigerator compartment).
- ✔ The previously set temperature is displayed.

8.2 Automatic Fast freezing

With automatic Fast freezing, the freezer compartment cools down to a much lower temperature than in normal mode. This freezes food more quickly.
The automatic Fast freezing switches on if you place fresh food in the frozen food tray that is attached to the rear of the large frozen food container or in the flat frozen food containers, starting from the right-hand side.
If the automatic Fast freezing is switched on, ⁂ (Freezer compartment) lights up and increased noises may occur.
After operation, the appliance switches from automatic Fast freezing to normal operation.

Cancelling automatic Fast freezing

- Press ⁂ (Freezer compartment).
- ✔ The previously set temperature is displayed.

8.3 Manual Fast freezing

With Fast freezing, the freezer compartment cools as cold as possible.
Switch on Fast freezing four to six hours before placing food weighing 2 kg or more into the freezer compartment.
In order to utilise the freezer capacity, use Fast freezing.
→ *"Prerequisites for freezing capacity", Page 22*

Note: When Fast freezing is switched on, increased noise may occur.

Switching on manual Fast freezing

- Press ⁂ (Freezer compartment).
- ✔ ⁂ (Freezer compartment) lights up.

Note: After approx. 60 hours, the appliance switches to normal operation.

Switching off manual Fast freezing

- Press ⁂ (Freezer compartment).
- ✔ The previously set temperature is displayed.

8.4 Holiday mode

If you are going to be away for a long time, you can switch on energy-saving holiday mode on the appliance.

⚠ **CAUTION**
Risk of harm to health!
The refrigerator compartment heats up while the holiday mode is switched on. The increased temperature may cause bacteria to increase and spoil the food.
- When the holiday mode is switched on, do not store any food in the refrigerator compartment.

The appliance automatically sets the temperatures.

Refrigerator compartment	14 °C
Freezer compartment	Temperature remains unchanged

Switching on holiday mode

- Press + (Refrigerator compartment) repeatedly until the temperature display (refrigerator compartment) shows Ho.
- ✔ No temperature is shown in the temperature display (refrigerator compartment).

Switching off holiday mode

- Press — (Refrigerator compartment) repeatedly until the temperature display (refrigerator compartment) shows the required temperature.

9 Alarm

9.1 Door alarm

If the appliance door is open for a while, the door alarm switches on.
A warning tone sounds.

Switching off the door alarm

- Close the appliance door or press 🔕.
- ✔ The warning tone is switched off.

9.2 Temperature alarm

If the freezer compartment becomes too warm, the temperature alarm is switched on.
A warning tone sounds and 🔕 lights up.

⚠ **CAUTION**
Risk of harm to health!
During the thawing process, bacteria may multiply and spoil the frozen food.
- Do not refreeze food after it has been defrosted or started to defrost.
- Refreeze food only after cooking.

- These items should no longer be stored for the maximum storage period.

The temperature alarm can be switched on in the following cases:

- The appliance is switched on.
  Do not store any food until the appliance has reached the set temperature.
- Large quantities of fresh food are being placed inside.
  Switch on Fast freezing before placing large quantities of food in the appliance.
- The freezer compartment door is open for too long.
  Check whether the frozen food has defrosted or thawed.

Switching off the temperature alarm

- Press 🔕.
- ✔ The warning tone is switched off.
- ✔ The temperature display (freezer compartment) briefly indicates the warmest temperature reached in the freezer compartment. The temperature display (freezer compartment) then indicates the set temperature again.
- ✔ From this time on, the warmest temperature is measured again and saved.
- ✔ 🔕 lights up until the set temperature is reached again.

10 Home Connect

This appliance is network-capable. Connect your appliance to a mobile device to control its functions via the Home Connect app.
The Home Connect services are not available in every country. The availability of the Home Connect function depends on the availability of Home Connect services in your country. You can find information about this at: www.home-connect.com.
To be able to use Home Connect, you must first set up the connection to the WLAN home network (Wi-Fi[1]) and to the Home Connect app.
After switching on the appliance, wait at least 2 minutes until internal device initialisation is complete. Only then should you set up Home Connect.

The Home Connect app guides you through the entire login process. Follow the instructions in the Home Connect app to configure the settings.

Tips

- Please consult the documents supplied by Home Connect.
- Please also follow the instructions in the Home Connect app.

Notes

- Please note the safety precautions in this instruction manual and make sure that they are also observed when operating the appliance via the Home Connect app.
  → *"Safety", Page 7*
- Operating the appliance on the appliance itself always takes priority. During this time it is not possible to operate the appliance using the Home Connect app.

[1] Wi-Fi is a registered trademark of the Wi-Fi Alliance.

10.1 Setting up Home Connect

Requirement: The Home Connect app has been installed on your mobile device.

1. Scan the QR code using the Home Connect app.

RFGG0P01

2. Follow the instructions in the Home Connect app.

10.2 Checking the signal strength

You should check the signal strength if no connection could be established.

1. Press 📶.
✔ The temperature display (refrigerator compartment) shows Cn.
2. Press —/+ (Refrigerator compartment) repeatedly until the temperature display (refrigerator compartment) shows SI.
✔ The temperature display (freezer compartment) shows a value between 0 (no reception) and 3 (full reception).

Note: The signal strength should be at least 2.

Improving the reception

If the signal strength is too weak, the connection may be interrupted.

▸ Carry out one of the solution options:
  – Place the router and refrigerator closer together.
  – Ensure that the connection is not interfered with by screening walls.
  – Install a repeater to strengthen the signal.

10.3 Installing updates for the Home Connect software

The appliance searches for updates to the Home Connect software at regular intervals.

Note: If updates are available, the temperature display (refrigerator compartment) shows UP.
To reset the update and the temperature display (refrigerator compartment) to the set temperature, press any touch field.

1. Press 📶.
✔ The temperature display (refrigerator compartment) shows Cn.
2. Press —/+ (Refrigerator compartment) repeatedly until the temperature display (refrigerator compartment) shows UP and the temperature display (freezer compartment) shows OF.
3. Press —/+ (Freezer compartment).
✔ The temperature display (freezer compartment) shows an animation.
✔ The update is installed.
✔ The control panel is locked during the installation.
✔ If the installation is successful, the temperature display (freezer compartment) shows On.
4. If the temperature indicator (freezer compartment) shows Er, the appliance was unable to install the update.
  – Repeat the process at a later point.

5. If the update cannot be completed after several attempts, contact customer service → *Page 31* .

10.4 Resetting Home Connect settings

If your appliance experiences connection problems with the WLAN home network (Wi-Fi) or your appliance wants to log into a different WLAN home network (Wi-Fi), you can reset the Home Connect settings.

1. Press .
✔ The temperature display (refrigerator compartment) shows Cn.
2. Press —/+ (Refrigerator compartment) repeatedly until the temperature display (refrigerator compartment) shows rE and the temperature display (freezer compartment) shows OF.
3. Press —/+ (Freezer compartment).
✔ The temperature display (freezer compartment) shows an animation for 15 seconds.
✔ The temperature display (freezer compartment) shows OF.
✔ The Home Connect settings have been reset.

10.5 Data protection

Please see the information on data protection.
The first time your appliance is registered on a home network connected to the Internet, your appliance will transmit the following types of data to the Home Connect server (initial registration):

- Unique appliance identification (consisting of appliance codes as well as the MAC address of the Wi-Fi communication module installed).
- Security certificate of the Wi-Fi communication module (to ensure a secure data connection).
- The current software and hardware version of your appliance.
- Status of any previous reset to factory settings.

This initial registration prepares the Home Connect functions for use and is only required when you want to use the Home Connect functions for the first time.

Note: Please note that the Home Connect functions can only be utilised with the Home Connect app. Information on data protection can be retrieved in the Home Connect app.

11 Refrigerator compartment

You can keep meat, sausage, fish, dairy products, eggs, prepared meals and pastries in the refrigerator compartment.
The temperature can be set from 2 °C to 8 °C.
The refrigerator compartment can also be used to store highly perishable foods in the short to medium term. The lower the selected temperature, the longer the food remains fresh.

11.1 Tips for storing food in the refrigerator compartment

- Only store food when fresh and undamaged.
- Store food covered or in air-tight packaging.

- To avoid impeding the circulation of air and to prevent food from freezing, do not place food so that it has direct contact with the back wall.
- Allow hot food and drinks to cool down first before placing in the appliance.
- Observe the best-before date or use-by date specified by the manufacturer.

11.2 Chill zones in the refrigerator compartment

The air circulation in the refrigerator compartment creates different chill zones.

Coldest zone

The coldest zone is between the arrow stamped on the side and the shelf underneath.

Tip: Store highly perishable food such as fish, sausages and meat in the coldest zone.

Warmest zone

The warmest zone is at the very top of the door.

Tip: Store food that does not spoil easily in the warmest zone, e.g. hard cheese and butter. Cheese can then continue to release its aroma and the butter will still be easy to spread.

11.3 "OK" sticker

The "OK" sticker lets you check whether the refrigerator compartment reaches the safe temperature ranges of +4 °C or colder recommended for food.
The "OK" sticker is not included with all models.

If the sticker does not indicate "OK", gradually reduce the temperature.
→ *"Setting the refrigerator compartment temperature", Page 17*
Once the appliance is switched on, it may take up to 12 hours until the set temperature is reached.

Correct setting

12 Freezer compartment

You can store frozen food, freeze food and make ice cubes in the freezer compartment.
The temperature can be set from −16 °C to −24 °C.
Long-term storage of food should be at −18 °C or lower.
The freezer compartment can be used to store perishable food long-term. The low temperatures slow down or stop the spoilage.

12.1 Freezing capacity

The freezing capacity indicates the quantity of food that can be frozen right through to the centre within a specific period of time.
Information on freezing capacity can be found on the rating plate.
→ *Fig.* 1 / 4

Prerequisites for freezing capacity

1. Approx. 24 hours before placing fresh food in the appliance, switch on Fast freezing.
   → *"Switching on manual Fast freezing", Page 18*
2. If the appliance has a flat frozen food container, fill this with food first. For appliances without a flat

frozen food container, fill the lowest frozen food container with food first.

3. Freeze fresh food as close as possible to the side panels.

12.2 Fully utilising the freezer compartment volume

Learn how to store the maximum amount of frozen food in the freezer compartment.

1. Remove all fittings from the freezer compartment. → *Page 26*
2. Store food directly on the shelves and on the floor of the freezer compartment.

12.3 Tips for storing food in the freezer compartment

- Store food in air-tight packaging.
- Do not bring food which is to be frozen into contact with frozen food.
- Place the food over the whole area of the frozen food containers.
- To quickly and gently freeze larger quantities of fresh food, place this in the top frozen food container.
- To ensure that the air can circulate freely in the appliance, push the frozen food containers in as far as they will go.

12.4 Tips for freezing fresh food

- Freeze fresh and undamaged food only.
- Freeze food in portions.
- Cooked food is more suitable than food that can be eaten raw.
- Vegetables: Wash, chop up and blanch before freezing.
- Fruit: Wash, pit and perhaps peel, possibly add sugar or ascorbic acid solution.
- Food that is suitable for freezing includes baked items, fish and seafood, meat, game, poultry, eggs without shells, cheese, butter and quark, ready meals and leftovers.
- Food that is unsuitable for freezing includes lettuce, radishes, eggs in shells, grapes, raw apples and pears, yoghurt, sour cream, crème fraîche and mayonnaise.

Packing frozen food

If you select suitable packaging material and the correct type of packaging, you can determine the product quality and prevent freezer burn.

1. Place the food in the packaging.
2. Squeeze out the air.
3. Pack food airtight to prevent it from losing flavour and drying out.
4. Label the packaging with the contents and the date of freezing.

12.5 Shelf life of frozen food at –18 °C

Food	Storage time
Fish, sausages, prepared meals and baked goods	up to 6 months
Poultry, meat	up to 8 months
Vegetables, fruit	up to 12 months

12.6 Defrosting methods for frozen food

⚠ **CAUTION**

Risk of harm to health!

During the thawing process, bacteria may multiply and spoil the frozen food.

- Do not refreeze food after it has been defrosted or started to defrost.

- ▸ Refreeze food only after cooking.
- ▸ These items should no longer be stored for the maximum storage period.

- Defrost animal-based food, such as fish, meat, cheese, quark, in the refrigerator compartment.
- Defrost bread at room temperature.
- Prepare food for immediate consumption in the microwave, in the oven or on the hob.

13 Defrosting

13.1 Defrosting in the refrigerator compartment

When the appliance is operating, condensation droplets or frost form on the rear panel of the refrigerator compartment due to functional reasons. The back panel in the refrigerator compartment defrosts automatically.
Condensation runs through the condensation channel into the drainage hole to the evaporation pan and does not have to be wiped away.
To ensure that the condensation can drain and odours do not form, observe the following information:
→ *"Cleaning the condensation channel and drainage hole", Page 26*.

13.2 Defrosting in the freezer compartment

The freezer compartment does not defrost automatically. A layer of hoarfrost in the freezer compartment impairs refrigeration of the frozen food and increases power consumption.

Defrosting the freezer compartment

Regularly defrost the freezer compartment.

1. Switch on Fast freezing approx. four hours before defrosting.
   → *"Switching on manual Fast freezing", Page 18*

   This means that the food reaches very low temperatures and it can be stored for longer at room temperature.
2. Remove the frozen food container with the frozen food and temporarily place it in a cool location. Place ice packs (if available) on the frozen food.
3. Switch off the appliance.
   → *Page 16*
4. Disconnect the appliance from the power supply.

   Unplug the appliance from the mains or switch off the circuit breaker in the fuse box.
5. To accelerate the defrosting process, place a pan of hot water on a trivet in the freezer compartment.
6. Wipe up the condensation water with a soft cloth or sponge.
7. Rub the freezer compartment dry with a soft, dry cloth.
8. Electrically connect the appliance.
   → *Page 14*
9. Switch on the appliance.
   → *Page 16*
10. Reinsert the frozen food containers with the frozen food.

14 Cleaning and servicing

To keep your appliance working efficiently for a long time, it is important to clean and maintain it carefully. Customer Service must clean inaccessible points. Cleaning by customer service can give rise to costs.

14.1 Preparing the appliance for cleaning

1. Switch off the appliance.
   → *Page 16*
2. Disconnect the appliance from the power supply.

   Unplug the appliance from the mains or switch off the circuit breaker in the fuse box.
3. Take out all of the food and store it in a cool place.

   Place ice packs (if available) onto the food.
4. If there is a layer of hoarfrost, allow this to defrost.
5. Remove all fittings and accessories from the appliance.
   → *Page 26*
6. Remove the shelf above the fruit and vegetable container.
   → *Page 26*

14.2 Cleaning the appliance

⚠ **WARNING**
Risk of electric shock!
An ingress of moisture can cause an electric shock.
- Do not use steam- or high-pressure cleaners to clean the appliance.

Liquid in the lighting or in the controls can be dangerous.
- The rinsing water must not drip into the lighting or controls.

ATTENTION!
Unsuitable cleaning products may damage the surfaces of the appliance.
- Do not use hard scouring pads or cleaning sponges.
- Do not use harsh or abrasive detergents.
- Do not use cleaning products with a high alcohol content.

If liquid gets into the drainage hole, the evaporation pan may overflow.
- The rinsing water must not get into the drainage hole.

If you clean fittings and accessories in the dishwasher, this may cause them to become deformed or discolour.
- Never clean fittings and accessory in the dishwasher.

1. Prepare the appliance for cleaning.
   → *Page 25*
2. Clean the appliance, the fittings, the accessories and the door seals with a dish cloth, lukewarm water and a little pH-neutral washing-up liquid.
3. Dry thoroughly with a soft, dry cloth.
4. Insert the fittings and install the appliance components.
5. Electrically connect the appliance.
   → *Page 14*
6. Switch on the appliance.
   → *Page 16*
7. Putting the food into the appliance.

14.3 Cleaning the condensation channel and drainage hole

Regularly clean the condensation channel and drainage hole to ensure that the condensation can drain.

- Carefully clean the condensation channel and the drainage hole, e.g. using a cotton bud.
  → *Fig.* 7

14.4 Removing the fittings

If you want to clean the fittings thoroughly, remove these from your appliance.

Removing the shelf

- Pull out and remove the shelf.
  → *Fig.* 8

Removing the extendable shelf

1. Firmly pull out the extendable shelf until the locking catch is released.
   → *Fig.* 9
2. Lower the shelf and swing it out to the side.

Removing door rack

- Lift the door rack and remove it.
  → *Fig.* 10

Removing the fruit and vegetable container

1. Pull out the fruit and vegetable container as far as it will go.
2. Lift the fruit and vegetable container at the front ① and remove it ②.
   → *Fig.* 11

Removing the frozen food container

1. Take out the frozen food container as far as it will go.
2. Lift the frozen food container at the front ① and remove it ②.
   → *Fig.* 12

14.5 Removing appliance components

If you want to clean your appliance thoroughly, you can remove certain components from your appliance.

Removing the shelf above the fruit and vegetable container

1. Pull out the fruit and vegetable container.
2. Remove the shelf ① and rotate it ②.
   → *Fig.* 13
3. Press the fastenings for the lower cover outwards.
   → *Fig.* 14
4. Lift the cover at the front ① and pull it out at the rear ②.
   → *Fig.* 15

15 Troubleshooting

You can rectify minor faults on your appliance yourself. Read the troubleshooting information before contacting after-sales service. This will avoid unnecessary costs.

⚠ **WARNING**
Risk of electric shock!
Incorrect repairs are dangerous.
- Repairs to the appliance should only be carried out by trained specialist staff.
- Only use genuine spare parts when repairing the appliance.
- If the power cord of this appliance is damaged, it must be replaced by the manufacturer, the manufacturer's Customer Service or a similarly qualified person in order to prevent any risk.

Fault	Cause and troubleshooting
The appliance is not cooling, the displays and lighting are lit.	Showroom mode is switched on. ▸ Carry out the appliance self-test. → *Page 30* ✔ Once the appliance self-test has ended, the appliance switches to normal operation.
The LED lighting does not work.	Different causes are possible. ▸ Call customer service. The customer service number can be found in the enclosed customer service directory.
Home Connect is not working properly.	Different causes are possible. ▸ Go to www.home-connect.com.
E or d appears in the temperature display.	The electronics have detected a fault. 1. Switch off the appliance. → *Page 16* 2. Disconnect the appliance from the mains. Unplug the appliance from the mains or switch off the circuit breaker in the fuse box. 3. Reconnect the appliance after five minutes. 4. If the message still appears on the display, call customer service. The customer service number can be found in the enclosed customer service directory.

Fault	Cause and troubleshooting
The temperature display (freezer compartment) flashes.	The temperature in the freezer compartment was too warm. 1. Press 🔕. ✔ The temperature display (freezer compartment) briefly indicates the warmest temperature reached in the freezer compartment. The temperature display (freezer compartment) then indicates the set temperature again. 2. Press 🔕. ✔ The temperature display (freezer compartment) no longer flashes.
A warning tone sounds, the temperature display (freezer compartment) flashes and 🔕 lights up.	Different causes are possible. ▸ Press 🔕. ✔ The alarm is switched off.
	The appliance door is open. ▸ Close the appliance door.
	External ventilation openings are covered up. ▸ Remove any obstructions from in front of the external ventilation openings.
	Larger quantities of fresh food have been put in. ▸ Do not exceed the max. freezing capacity. → *"Freezing capacity", Page 22*
The temperature differs greatly from the setting.	Different causes are possible. 1. Switch off the appliance. → *Page 16* 2. Switch the appliance back on after five minutes. → *Page 16* – If the temperature is too warm, check the temperature again after a couple of hours. – If the temperature is too cold, check the temperature again on the following day.
The base of the refrigerator compartment is wet.	The condensation channel or drainage hole are blocked. ▸ Clean the condensation channel and the drainage hole. → *Page 26*
The appliance hums, bubbles, buzzes, gargles or clicks.	Not a fault. A motor is running, e.g. refrigerating unit, fan. Refrigerant flows through the pipes. The motor, switches or solenoid valves are switching on or off. No action required.
The appliance makes noises.	Fittings wobble or stick. ▸ Check the removable fittings and, if required, replace these.

Fault	Cause and troubleshooting
The appliance makes noises.	Bottles or containers are touching. ▸ Move the bottles or containers away from each other.
	Fast freezing is switched on. No action required.

15.1 Power failure

During a power failure, the temperature in the appliance rises; this reduces the storage time and the quality of the frozen food.
On the website for your appliance, the technical data provides you with the storage times for frozen food in the event of a fault.

Notes

- Open the appliance as little as possible during a power failure and do not place any other food in the appliance.
- Check the quality of the food immediately after a power failure.
  - Dispose of any frozen food that has defrosted and is hotter than 5 °C.
  - Cook or fry slightly thawed frozen food, and then either consume it or freeze it again.

15.2 Conducting an appliance self-test

Your appliance has an appliance self-test which displays faults that can be eliminated by your customer service.

1. Switch off the appliance. → *Page 16*
2. Switch the appliance back on after approx. five minutes. → *Page 16*
3. Within the first 10 seconds after switching on, press and hold ❄ (Freezer compartment) for 3 to 5 seconds until an audible signal sounds.

✔ The appliance self-test starts.
✔ While the appliance self-test is running, a long audible signal sounds.
✔ If, at the end of the appliance self-test, two audible signals sound and the temperature display indicates the set temperature, your appliance is OK. The appliance switches to normal operation.
✔ If, at the end of the appliance self-test, 5 audible signals sound and ❄ (Freezer compartment) flashes for 10 seconds, inform customer service.

16 Storage and disposal

16.1 Taking the appliance out of operation

1. Switch off the appliance. → *Page 16*
2. Disconnect the appliance from the power supply.

   Unplug the appliance from the mains or switch off the circuit breaker in the fuse box.
3. Remove all of the food.
4. Defrost the appliance. → *Page 24*
5. Clean the appliance. → *Page 25*
6. To guarantee the ventilation inside the appliance, leave the appliance open.

16.2 Disposing of old appliance

Valuable raw materials can be reused by recycling.

⚠ **WARNING**
Risk of harm to health!
Children can lock themselves in the appliance, thereby putting their lives at risk.

- Leave shelves and containers inside the appliance to prevent children from climbing in.
- Keep children away from the redundant appliance.

⚠ **WARNING**
Risk of fire!
If the tubes are damaged, flammable refrigerant and harmful gases may escape and ignite.
- Do not damage the tubes of the refrigerant circuit or the insulation.

1. Unplug the appliance from the mains.
2. Cut through the power cord.
3. Dispose of the appliance in an environmentally friendly manner.

   Information about current disposal methods are available from your specialist dealer or local authority.

This appliance is labelled in accordance with European Directive 2012/19/EU concerning used electrical and electronic appliances (waste electrical and electronic equipment - WEEE). The guideline determines the framework for the return and recycling of used appliances as applicable throughout the EU.

17 Customer Service

Detailed information on the warranty period and terms of warranty in your country is available from our after-sales service, your retailer or on our website.
If you contact Customer Service, you will require the product number (E-Nr.) and the production number (FD) of your appliance.
The contact details for Customer Service can be found in the enclosed Customer Service directory or on our website.

17.1 Product number (E-Nr.) and production number (FD)

You can find the product number (E-Nr.) and the production number (FD) on the appliance's rating plate.
→ *Fig.* 1/4
Make a note of your appliance's details and the Customer Service telephone number to find them again quickly.

18 Technical data

Refrigerant, cubic capacity and further technical specifications can be found on the rating plate.
→ *Fig.* 1/4

19 Declaration of Conformity

BSH Hausgeräte GmbH hereby declares that the appliance with Home Connect functionality conforms to the basic requirements and other relevant provisions of Directive 2014/53/EU.
A detailed RED Declaration of Conformity can be found online at www.gaggenau.com among the additional documents on the product page for your appliance.

CE

2.4 GHz band (2400–2483.5 MHz): Max. 100 mW

目錄

1 安全性 34
1.1 一般提示說明 34
1.2 使用須知 34
1.3 用戶限制 34
1.4 運送的安全性 34
1.5 安裝的安全性 34
1.6 使用安全性 35
1.7 裝置損壞 37

2 避免財物損失 38

3 環境保護和節省資源 38
3.1 處理廢棄包裝物料 38
3.2 節約能源 38

4 安裝和連接 38
4.1 出貨內容物清單 38
4.2 安裝地點考量要件 39
4.3 安裝設備 39
4.4 第一次使用本裝置的事前準備工作 39
4.5 接通電器電源 39

5 深入瞭解 39
5.1 設備 39
5.2 操作面板 40

6 配置 40
6.1 層架 40
6.2 抽取式層架 40
6.3 折疊式瓶架 40
6.4 配有濕度調節器的蔬果盒 40
6.5 扁平式冷凍儲存盒 41
6.6 門邊置物架 41
6.7 配件 41

7 基本操作 41
7.1 開機 41
7.2 操作注意事項 41
7.3 關機 41
7.4 設定溫度 41

8 附加功能 42
8.1 急速冷藏 42
8.2 自動急速冷凍 42
8.3 手動 急速冷凍 42
8.4 假期模式 42

9 警示 43
9.1 箱門警報 43
9.2 溫度警示 43

10 Home Connect 43
10.1 建立Home Connect 44
10.2 檢查訊號強度 44
10.3 安裝 Home Connect 軟件的更新程式 44
10.4 重設 Home Connect 設定 44
10.5 資料保護 45

11 冷藏室 45
11.1 將食物存放到冷藏室的秘訣 45
11.2 冷藏室裡的冷卻區 45
11.3 OK 標籤 45

12 冷凍室 45
12.1 冷凍能力 46
12.2 充份利用冷凍室容積 46
12.3 將食物存放到冷凍室的秘訣 46
12.4 冷凍新鮮食物的秘訣 46
12.5 冷凍物品在 −18 °C 下的保存時間 46
12.6 冷凍物品的解凍方式 46

13 除霜 47
13.1 冷藏室除霜 47
13.2 冷凍室除霜 47

14 清潔和保養 47
14.1 清潔機器的事前準備工作 47
14.2 清潔機器 47
14.3 清潔冷凝水排放通道和排水孔 48
14.4 取出配件 48
14.5 拆卸設備部件 48

15 排除故障 49
15.1 停電 51
15.2 執行裝置自檢程序 51

16 存放和廢棄處理..... 51
16.1 將本機停止運轉..... 51
16.2 舊機處理 51

17 客戶服務 51
17.1 產品編號（E-Nr.）和生產編號（FD） 52

18 技術資料 52

19 合規聲明 52

⚠ 1 安全性

請注意以下的安全須知。

1.1 一般提示說明

- 請仔細閱讀本說明書。
- 請妥善保管本手冊和產品資訊，以備日後查閱或提供給下一位使用者。
- 如本設備於運送途中受損，切勿安裝。

1.2 使用須知

本裝置只可採用內嵌式安裝。
本電器只能用於以下用途：
- 用來冷藏和冷凍食物以及製作冰塊。
- 僅限私人家庭和居家環境的室內區域。
- 本機可在海拔最高 2000 m 以下的環境使用。

1.3 用戶限制

凡年滿 8 歲的孩童，身體、感官或智力有缺陷及缺乏相關操作經驗人士，必須在負責其安全的人員監督下或了解設備安全及相關危險的人員指導下才可使用本機。
請勿讓孩童將本設備當作玩具玩耍。
孩童除非在監督下，否則不得進行清潔及護理的工作。

1.4 運送的安全性

⚠ 警告 – 受傷風險!
抬起機器時，沈重的重量可能會造成受傷。
▸ 請勿自行抬起機器。

1.5 安裝的安全性

⚠ 警告 – 觸電風險!
安裝不當可能導致危險。
▸ 僅限按家電銘牌所提供之資訊接駁並運行本機。
▸ 僅限透過按規定安裝接地保護的插座將本機接駁到帶有交流電的主電源。

- 房屋電路安裝的接地系統必須按規定進行安裝。
- 切勿透過定時器或遙控器等外部開關裝置為本機供電。
- 本機安裝完成後，必須可以隨手插入或拔除電源插頭，或者若無法隨手插入或拔除插頭，必須根據過電壓類別 III 和安裝規定的要求，在進行固定的電路安裝時應安裝全相的切斷裝置。
- 安裝機器時，請確保電源線未被夾住或受到損壞。

電源線絕緣層若損壞可能發生危險。
- 請勿將電源線靠近發熱的熱源。

⚠ 警告 – 爆炸風險!

若關閉本設備的通風口，製冷循環迴路萬一發生洩漏時，燃氣和空氣可能會形成易燃的混合體。
- 請勿關閉設備外殼或機身內部的通風口。

⚠ 警告 – 火災風險!

使用電源延長線和未經授權的轉接器可能發生危險。
- 請勿使用電源延長線或拖板。
- 僅使用製造商批准的轉接器和電源線。
- 若電源連接線過短，而且沒有更長的電源線，請聯絡專業的電氣公司來修改家中配電系統。

便攜式多位插座或電源可能會過熱並導致火災。
- 便攜式多位插座或電源不可置於裝置背面。

1.6 使用安全性

⚠ 警告 – 觸電風險!

濕氣滲入可能會導致觸電。
- 本裝置只限於室內使用。
- 切勿將本裝置置於高溫或潮濕處。
- 請勿使用蒸氣清潔機、高壓清潔機清潔本機。

⚠ 警告 – 窒息風險!

孩童有可能用包裝膠袋將頭部套住或將自己纏住而造成窒息。
- 請確保孩童遠離包裝膠袋。
- 請勿讓孩童玩耍包裝膠袋。

孩童可能會吸入或吞食小型零件而造成窒息。
- 請確保孩童遠離小型零件。
- 切勿讓孩童用小型零件玩耍。

⚠ 警告 – 爆炸風險!
若製冷劑迴路損壞，則易燃的製冷劑可能會溢出並爆炸。
▸ 切勿使用其他機械設備或非製造商建議使用的工具，來加速除霜。
▸ 用鈍物鬆開冷凍食品，例如木匙。
噴罐及其他內含易燃推進氣體和易爆物質的物品有發生爆炸的危險。
▸ 請勿將內含易燃推進氣體及易爆物質的物品存放在本裝置內。

⚠ 警告 – 火災風險!
在本裝置內使用電器（例如熱水器或製冰器），該電器可能起火燃燒。
▸ 切勿在本裝置內使用電器。

⚠ 警告 – 受傷風險!
罐裝的碳酸飲料可能有爆裂的危險。
▸ 請勿將罐裝的碳酸飲料儲存在冷凍室。
外洩的易燃冷媒及有害氣體會損害眼睛。
▸ 請勿損壞冷媒迴路的配管及絕緣體。

⚠ 警告 – 凍傷風險!
觸碰冷凍物品及低溫表面可能會凍傷。
▸ 請勿立即食用從冷凍室取出的冷凍食品。
▸ 避免皮膚長時間接觸冷凍室的冷凍食品、冰塊以及任何表面。

⚠ 小心 – 危害健康的風險!
為避免食品受到污染，請遵照以下指示。
▸ 若長時間開啟雪櫃門，裝置的儲物格內部的溫度可能會大幅回升。
▸ 請定期清潔會與食物接觸到的表面以及可觸及範圍內的排流設備。
▸ 生肉和生魚先裝入合適的容器內再放冰箱，以避免接觸到其他食物或其血水滴落至其他食物上。
▸ 若長時間不使用雪櫃 / 冰櫃，請關掉電源、進行除霜和清潔，並打開櫃門，以預防發霉。
設備內的金屬材質或金屬外觀的部件可能含有鋁合金成份。酸性食物若接觸到鋁合金部件，可能會令鋁離子轉移至食物中。
▸ 請勿食用受到污染的食物。

1.7 裝置損壞

⚠ 警告 – 觸電風險!

機器損壞或電源線損壞時可能發生危險。

- ▸ 請勿操作受損的設備。
- ▸ 請勿拉扯電源線切斷本機電源。拔除電源線時，務必從插頭部位拉起。
- ▸ 若本機或電源線損壞，請立即拔除電源線插頭或關閉保險絲盒的保險絲。
- ▸ 請聯絡客戶服務。 → *頁次51*

維修不當可能發生危險。

- ▸ 只許由合資格的專業人員維修電器。
- ▸ 僅限使用原廠耗材維修電器。
- ▸ 若本電器的電線損壞，必須交由製造商或其客戶服務或具有類似資格的專業人員更換，以避免發生危險。

⚠ 警告 – 火災風險!

若是管路損壞，則易燃冷媒及有害氣體可能會因外洩而自燃。

- ▸ 請移除機器周圍的明火或火源。
- ▸ 請保持室內通風。
- ▸ 關掉電源。 → *頁次41*
- ▸ 拔除電源線插頭或關閉保險絲盒中的保險絲。
- ▸ 請聯絡客戶服務。 → *頁次51*

2 避免財物損失

注意！
坐在 / 倚靠底座、儲存室或雪櫃門等處或藉這些部分攀高，可能令本裝置受損。
- 請勿倚靠或踏在底座、儲存室或雪櫃門上。

油污可能會將塑膠零件及雪櫃門封條侵蝕出許多細微孔洞。
- 請保持塑膠零件及雪櫃門封條處無油脂。

設備的金屬材質或表面具有金屬材質效果的部份可能含鋁。鋁若接觸酸性食物，會產生化學反應。
- 請勿在本設備內存放未包裝的食物。

3 環境保護和節省資源

3.1 處理廢棄包裝物料

包裝物料符合環保要求且可回收。
- 請分類處理各組件。

3.2 節約能源

若您注意此提示說明，電器的耗電量將會更低。

選擇安裝地點

- 設備應避免陽光直射。
- 安裝設備的地點應盡量遠離加熱器、爐灶以及其他熱源：
  - 與電磁爐或瓦斯爐需保持 30 毫米的距離。
  - 與油爐或煤爐需保持 300 毫米的距離。
- 請利用室角深度 560 毫米的地點。
- 請勿覆蓋或堵住外部出氣口。

以節約能源方式使用本裝置

備註 配件安裝位置不得影響設備的能源消耗。

- 本電器開動的時間不可過久並且應小心關掉。
- 請勿覆蓋或堵住內部通風口或外部出氣口。
- 請從保冷袋取出購買的食物，並迅速放入本設備。
- 溫熱的食物和飲料請於冷卻後才放入。
- 放入冷藏室解凍的冷凍食品，可利用冷凍食品本身的低溫幫助冷藏室保持溫度。
- 請在食物和本機背板之間留有一定的空間。
- 請定期為冷凍室除霜。

4 安裝和連接

4.1 出貨內容物清單

拆開包裝後，請檢查所有零件有否於運送途中受損以及交付的產品是否齊全。若發現有問題，請聯繫購買機器的供應商或者聯絡本公司的 客戶服務 → *頁次 51*。

產品清單包括：
- 嵌入式機器
- 配置與配件[1]
- 安裝零件
- 安裝手冊
- 使用說明書
- 客戶服務目錄
- 保養卡[2]
- 能源標籤
- 關於耗電量和噪音的資訊
- Home Connect詳細資訊

[1] 視乎電器的配置而定

[2] 只在特定國家/地區

4.2 安裝地點考量要件

⚠ **警告**

爆炸風險!

本裝置若是架設在狹小空間裡，製冷循環迴路萬一發生洩漏時，燃氣和空氣可能會形成易燃的混合體。

- 安裝本裝置時，必須達到每 8 g 冷媒至少能夠分配到 1 m^3 的空間。冷媒量資訊標示在家電銘牌上。
  → *圖* 1 / 4

機器的重量將視機型而定，出廠時最重可達 75 公斤。
安裝的地面必須足夠堅固，才能承受設備的重量。

允許的室內溫度

允許的室內溫度取決於機器的氣候類別。
氣候類別資料標示在家電銘牌上。
→ *圖* 1 / 4

氣候類別	允許的室內溫度
SN	10 °C...32 °C
N	16 °C...32 °C
ST	16 °C...38 °C
T	16 °C...43 °C

本機在所允許的室內溫度下，運轉功能才會齊全。
若要在室溫較低的地方安裝屬於氣候類別 SN的機器， 除非將室溫提高 5 °C，否則機器可能會損壞。

室角深度

若要將本設備嵌進櫥櫃內，請注意夾層尺寸。在出現偏差的情況下可能會在設備安裝時出現問題。

室角深度

安裝本裝置時，建議的室角深度為 560 毫米。
室角深度較小時，耗電量將稍微提高。
室角深度必須至少 550 毫米。

室角闊度

櫥櫃室角內部闊度至少需要 560 毫米，才能安裝本機。

上下疊排和並行安裝

若要上下或並排安裝2台製冷電器，電器之間必須相隔至少150毫米。安裝所選電器時無須最小距離。相關問題請向專業經銷商或廚房規劃師查詢。

4.3 安裝設備

- 請按照隨附之安裝說明書安裝設備。

4.4 第一次使用本裝置的事前準備工作

1. 取出提供資訊的文件。
2. 拆除保護貼膜和搬運固定條，例如膠條和紙板。
3. 第一次清潔本裝置。 → *頁次47*

4.5 接通電器電源

1. 將電器電線的插頭插入電器附近的電源插座。

   電器的連接資料位在規格銘板上。
   → *圖* 1 / 4
2. 檢查電源插頭是否牢固。

✔ 本電器已可開始使用。

5 深入瞭解

5.1 設備

可在此查看電器的相關組件一覽。
→ *圖* 1

A	冷藏室 → *頁次45*
B	冷凍室 → *頁次45*
1	操作面板 → *頁次40*
2	抽取式層架 → *頁次40*
3	配有濕度調節器的蔬果盒 → *頁次40*
4	家電銘牌 → *頁次52*
5	扁平式冷凍存放盒 → *頁次41*

6	冷凍儲存盒 → *頁次48*
7	門邊瓶架 → *頁次41*

備註 機器的實際配置和尺寸可能與圖示有差異。

5.2 操作面板

可透過操作面板設定電器的所有功能並獲得有關操作狀態的資訊。
→ *圖* 2

1	✳（冷藏室） 是用來啟動或關掉 急速冷藏。
2	ー / ＋（冷藏室） 可調整冷藏室的溫度。
3	將以 °C 顯示冷藏室目前設定的溫度。
4	可開啟「Home Connect 設定」選單。
5	關閉警示音。
6	ー / ＋（冷凍室） 設定冷凍室的溫度。
7	將以 °C 顯示冷凍室目前設定的溫度。
8	⁂（冷凍室） 是用來啟動或關掉 急速冷凍。
9	⏻是用來啟動或關掉本裝置的電源

6 配置

機器的配置視機型而定。

6.1 層架

若要依需求變換層架配置，您可以取出層架並將它重新插入至其他位置。
→ *「取出層架」，頁次48*

6.2 抽取式層架

將可拉式層架拉出後，所有物品便一目了然，可快速拿取食材。

6.3 折疊式瓶架

您可將瓶罐安全地存放在折疊式瓶架上。
若要使用瓶架，將金屬條往下折即可。
→ *圖* 3

6.4 配有濕度調節器的蔬果盒

新鮮水果或蔬菜放在蔬果盒裡，無需包裝。
將切好的蔬果蓋上蓋子或裝入密封容器內存放。
透過濕度調節器和特殊的密封即可調節蔬果盒的濕度。這將使新鮮水果和蔬菜比起用傳統方式儲存延長兩倍的保存時間。
→ *圖* 4
移動濕度調節器即可根據食品的種類及數量調整蔬果盒的濕度：

- 存放物以水果為主、蔬果混合存放或存放量較高時，請設為低濕度💧。
- 存放物以蔬菜為止或存放量少時，請設為高濕度💧💧💧。

根據儲存量及儲存食物，蔬果盒可能形成冷凝水。
可用乾布擦去水珠，並利用濕度調節器來調低空氣濕度。
為能保持最佳品質和風味，易凍壞的蔬果應存放在本設備外，約 8 °C 至 12 °C 的溫度下，例如：菠蘿、香蕉、柑橘類、青瓜、節瓜、椒類、番茄和馬鈴薯。

6.5 扁平式冷凍儲存盒

請將扁平的冷凍品、冰塊盒和冰鏟存放在扁平式冷凍儲存盒內。

6.6 門邊置物架

若要依需求變更門邊置物架配置，可取出門邊置物架並將它重新插入至其他位置。
→ *「取出門邊置物架」，頁次48*

6.7 配件

請使用原廠配件。原廠配件是專為本電器所設計。
您的電器配件取決於機型而定。

蛋架

請將蛋放在蛋架上，以確保安全。

瓶罐夾

設備門開關時，瓶罐夾可防止瓶罐傾斜。
將金屬條壓攏 ① 然後將瓶罐夾儘量往瓶罐推至緊貼 ②。
→ *圖* **5**

冷凍抽屜

冷凍抽屜可快速冷凍少量食物，例如莓果、水果切塊、香草植物和蔬菜。
→ *圖* **6**
請將冷凍物品均勻分散在冷凍抽屜裡，完全冷凍的所需時間為 10 至 12 小時。然後再倒入冷凍保鮮袋或冷凍保鮮盒。

蓄冷器

蓄冷器可暫時將食物保持低溫，例如可放入保冷袋中。

提示： 蓄冷器可延緩已儲存的冷凍食品溫度升高。

製冰盒

製冰盒可用來製作冰塊。

製作冰塊

只可使用飲用水製作冰塊。

1. 將飲用水倒入製冰盒內至¾滿，然後將它放入冷凍室。

   只能使用鈍器鬆開凍硬的製冰盒（例如蜜糖棒）。
2. 只要將製冰盒沖一下水或稍微扭動，即可取出冰塊。

7 基本操作

7.1 開機

1. 按一下 ⏻。
✔ 本電器開始製冷。
✔ 警示音響起，溫度顯示器（冷凍室）閃爍且 🔕 將亮起，藉以表示冷凍室的溫度仍然過高。
2. 使用🔕關掉警示音。
✔ 本設備達到所設定的溫度時，🔕 便會熄滅。
3. 設定所需的溫度。 → *頁次41*

7.2 操作注意事項

- 設備啟動電源後，需要好幾個小時才能達到所設定的溫度。
  未達設定溫度前，請勿放入食物。
- 冷凍室周圍的機體有時會稍微發熱。這是為了防止門封條上出現凝結的水珠。
- 關上門時，可能會形成負壓。機門很難重新打開。請稍候片刻，等待壓力達到平衡狀態。

7.3 關機

▸ 按一下 ⏻。

7.4 設定溫度

設定冷藏室溫度

▸ 請重複按壓 — / ＋（冷藏室），直到溫度顯示器（冷藏室）上出現您想要設定的溫度。

  冷藏室的建議溫度是 4 °C。
  → *「OK 標籤」，頁次45*

設定冷凍室溫度

- 請重複按壓 ー / ＋ (冷凍室) ，直到溫度顯示器 (冷凍室) 上出現您想要設定的溫度。

  冷凍室的建議溫度是 −18 °C。

8 附加功能

8.1 急速冷藏

急速冷藏 啟動後，冷藏室隨即下降至最冷溫度。
請在放入大量食物之前，先啟動 急速冷藏。

備註 若啟動 急速冷藏，噪音會增加。

啟動 急速冷藏

- 按下✳ (冷藏室) 。
- ✔ ✳ (冷藏室) 亮起。

備註 本設備將在約 15 小時後繼續以正常模式運轉。

關掉急速冷藏

- 按下✳ (冷藏室) 。
- ✔ 隨即顯示先前設定的溫度。

8.2 自動急速冷凍

使用自動急速冷凍功能時，冷凍室的溫度會降至比正常模式還要低。因此可凍結食物。
若將新鮮食物放到大型冷凍儲存盒後側的冷凍托盤內，或由右側開始放入扁平式冷凍儲存盒內，自動式急速冷凍便會啟動。
自動 急速冷凍 啟動時，⁂ (冷凍室) 將亮起，您同時也會聽見更多裝置運轉的噪音。
自動急速冷凍運作結束後，本電器將切換回正常模式。

取消自動 急速冷凍

- 按下⁂ (冷凍室) 。
- ✔ 隨即顯示先前設定的溫度。

8.3 手動 急速冷凍

急速冷凍 一旦被啟動，冷凍室會盡量降低溫度。
在您放入超過 2 公斤的食物到冰格之前，請讓 急速冷凍 先啟動 4 至 6 小時。
若想充份發揮設備的冷凍能力，請您使用 急速冷凍。
→ *「冷凍能力的先決條件」，頁次46*

備註 若啟動 急速冷凍，噪音會增加。

開啟手動 急速冷凍

- 按下⁂ (冷凍室) 。
- ✔ ⁂ (冷凍室) 亮起。

備註 本設備將在約 60 小時後繼續以正常模式運轉。

關閉手動 急速冷凍

- 按下⁂ (冷凍室) 。
- ✔ 隨即顯示先前設定的溫度。

8.4 假期模式

如果您長時間不在，可啟動本電器節能的假期模式。

⚠ **小心**
危害健康的風險!
假期模式啟動時，冷藏室的溫度會上升。溫度上升可能滋生細菌，使食物變質。
- 假期模式生效時，請勿在冷藏室存放食物。

本設備將自動調節溫度。

冷藏室	14 °C
冷凍室	溫度不變

啟動假期模式：

- 請重複按壓 ＋ (冷藏室) ，直到溫度顯示器 (冷藏室) 上出現 Ho。
- ✔ 溫度顯示器 (冷藏室) 上不顯示溫度。

關掉假期模式

- 請重複按壓 —（冷藏室），直到溫度顯示器（冷藏室）上出現您想要設定的溫度。

9 警示

9.1 箱門警報

若機門打開時間過長，機門警報會自動發出警報聲。
響起警示音。

關掉雪櫃門警報

- 關閉設備門或按一下 🔕。
- ✔ 警示音已關閉。

9.2 溫度警示

當冷凍室溫度偏高時，將發出溫度警報。
警示音響起且🔕亮起。

⚠ **小心**
危害健康的風險!
解凍時會滋生細菌，冷凍物品可能變質。
- 請勿將半解凍或已解凍的冷凍食品重新冷凍。
- 只有將食物烹煮或油炸後才能重新冷凍。
- 食物的最長儲存時間則完全不再適用。

溫度警報會在下列情況自動啟動：
- 設備開始運轉。
  待溫度達到設定值後，才放入食物。
- 儲存大量新鮮食物。儲存大量新鮮食物。
  放入大量食物前，請先啟動 急速冷凍。
- 冷凍室門開啟時間過長。
  檢查冷凍物品是否呈半解凍或已解凍狀態。

關閉溫度警報

- 按下 🔕。
- ✔ 警示音已關閉。
- ✔ 溫度顯示器（冷凍室）將短暫顯示冷凍室的最高溫度。然後溫度顯示器（冷凍室）又會重新顯示所設定的溫度。
- ✔ 從這時起，將重新偵測最高溫度並儲存。
- ✔ 🔕 亮起，直到重新回到所設定的溫度。

10 Home Connect

本電器具備網絡功能。將電器連線至流動終端裝置，以便使用Home Connect APP操作電器的功能。
Home Connect服務只在部分國家／地區提供。Home Connect的功能是否可用取決於您所在國家／地區是否提供Home Connect的服務。如需相關資訊，請前往：www.home-connect.com。
如需使用 Home Connect，首先必須建立與家用網絡（Wi-Fi[1]）和Home Connect APP的連結。
開機後請至少等待兩分鐘，直到內部機器初始化完成。然後才安裝Home Connect。

Home Connect APP將引導您完成整個登入過程。請按Home Connect APP上的指示說明進行設定。

建議

- 請注意隨附的Home Connect文件。
- 同時，也請注意在Home Connect APP的提示說明。

備註

- 請遵守該使用說明書中的重要安全須知，並確保在經由Home Connect APP操作本電器時亦遵守這些說明。
  → *「安全性」，頁次34*

[1] Wi-Fi 為 Wi-Fi Alliance 的註冊商標。

- 請務必以在本電器上操作為優先。在本電器上直接操作期間，無法透過 Home Connect APP操作。

10.1 建立Home Connect

需求： Home Connect已在流動終端裝置上安裝App。

1. 使用Home Connect APP掃描QR碼。

RFGG0P01

2. 請遵守Home Connect APP上的指示操作。

10.2 檢查訊號強度

若無法連線，請檢查訊號強度。

1. 按下 ⊼。
✔ 溫度顯示器（冷藏室）隨即出現 Cn。
2. 請重複按壓 一 / ＋（冷藏室），直到溫度顯示器（冷藏室）跳出 SI。
✔ 溫度顯示器（冷凍室）將一個介於 0（無接收訊號）與 3（接收訊號滿格）的數值。

備註 訊號強度應至少 2。

改善接收訊號

若訊號強度太弱，連線可能被中斷。

▸ 請執行其中一種可能的解決方式：
  – 請您將路由器與冷卻設備的距離拉近一點。
  – 確保不因牆壁的屏蔽，而使連線受到干擾。
  – 您還可以安裝一個中繼器來放大訊號。

10.3 安裝 Home Connect 軟件的更新程式

本設備會定期搜尋 Home Connect 軟件是否有更新程式。

備註 若有更新程式的話，溫度顯示器（冷藏室）會跳出 UP。
若要取消更新並將溫度顯示器（冷藏室）重設為所設定的溫度，請隨意按一下觸控面板。

1. 按下 ⊼。
✔ 溫度顯示器（冷藏室）隨即出現 Cn。
2. 請重複按壓 一 / ＋（冷藏室），直到溫度顯示器（冷藏室）跳出 UP 和溫度顯示器（冷凍室）跳出 OF。
3. 按下 一/＋（冷凍室）。
✔ 溫度顯示器（冷凍室）隨即跳出動畫畫面。
✔ 隨即開始安裝更新程式。
✔ 安裝期間，會禁用操作面板。
✔ 成功完成安裝後，溫度顯示器（冷凍室）將跳出 On。
4. 如果溫度顯示器（冷凍室）跳出 Er，表示設備無法安裝更新程式。
  – 請稍後再重複該步驟。
5. 如果經過多次嘗試仍無法完成更新，請洽 客戶服務 → *頁次51* 。

10.4 重設 Home Connect 設定

如果您的設備在連線至 WLAN 家用網絡（Wi-Fi）時發生問題，或者您想讓設備登入另一個 WLAN 家用網絡（Wi-Fi），此時您可以重設 Home Connect 設定。

1. 按下 ⊼。
✔ 溫度顯示器（冷藏室）隨即出現 Cn。
2. 請重複按壓 一 / ＋（冷藏室），直到溫度顯示器（冷藏室）跳出 rE 和溫度顯示器（冷凍室）跳出 OF。
3. 按下 一/＋（冷凍室）。
✔ 溫度顯示器（冷凍室）隨即跳出動畫畫面，時間持續約 15 秒。

✔ 溫度顯示器（冷凍室）顯示OF。
✔ 該 Home Connect 設定已重設。

10.5 資料保護

請您注意資料保護的相關提示說明。
電器在第一次連線至與網際網絡相連的家用網絡時，將傳輸下列各類資料至Home Connect伺服器（首次註冊）：

- 唯一電器標識（包括機器密鑰和已安裝的Wi-Fi通訊模組的MAC地址）。
- Wi-Fi通訊模組的安全證書（資訊技術的連接保障）。
- 您家電目前的軟件和硬件版本。
- 將之前任何的狀態恢復至原廠設定。

此首次註冊是準備提供給Home Connect功能使用，並在您第一次使用Home Connect功能時才會被啟動。

備註 請注意，Home Connect功能只有在連結到Home Connect APP時才能使用。您可在Home Connect APP中檢索資料保護的相關資訊。

11 冷藏室

冷藏室可存放肉類、香腸、魚、奶製品、蛋、準備好的菜餚和烘焙食品。
溫度設定範圍為 2 °C 至 8 °C之間。
冷藏室可保存非常容易變質的食物一段時間。設定的溫度愈低，食物的保鮮時間就愈長。

11.1 將食物存放到冷藏室的秘訣

- 請只存放生鮮和完整的食物。
- 請將食物密封包裝或蓋好存放。
- 為不影響空氣循環以及避免食物結凍，請勿將食物直接靠在後壁上。
- 熱食和熱飲在放入電器前必須先冷卻。
- 請注意製造商提供的保存期限或使用期限。

11.2 冷藏室裡的冷卻區

空氣循環系統使冷藏室形成不同的冷卻區。

最冷的區域

最冷的區域是在側邊有浮雕箭頭和位於其下的層架之間。

提示： 請將容易腐爛的食物（例如魚、香腸和肉）儲存在最冷的區域。

最不冷的區域

最不冷的區域是在箱門整個上部。

提示： 請將不容易變質的食物存放在最不冷的區域，例如硬芝士和牛油。將芝士放在此處可使其風味更佳，牛油則更易塗抹。

11.3 OK 標籤

利用 OK 標籤（確定），可檢查冷藏室是否達到所建議的食品安全溫度範圍 +4 °C 以下。
並非所有機型都擁有 OK 標籤。
若標籤未顯示 OK，應將溫度逐步降低。
→ *「設定冷藏室溫度」，頁次41*
啟動機器後，至少需持續運轉 12 個小時，才能達到設定的溫度為止。

正確設定

12 冷凍室

冷凍室內可存放冷凍食物、將食物冷凍及製作冰塊。
溫度設定範圍為 −16 °C 至 −24 °C之間。
長期儲存食物時，溫度應在 −18 °C 以下。
冷凍室可讓您長時間存放容易腐壞的食物。低溫可延緩或停止食物變質。

12.1 冷凍能力

冷凍能力代表可在特定小時數內冷凍的最大新鮮食物量。
關於冷凍能力，請查看家電銘牌上的說明。→ *圖* 1/ 4

冷凍能力的先決條件

1. 請在放入新鮮食物的大約 24 小時之前，開啟 急速冷凍。
   → *「開啟手動 急速冷凍」，頁次42*
2. 若是配備扁平式冷凍存放盒的設備，請先將食物放入此處。若是未配備扁平式冷凍存放盒的設備，請先將食物放入最下面的冷凍存放盒內。
3. 新鮮食物儘量靠近側壁冷凍。

12.2 充份利用冷凍室容積

了解如何在冷凍室內放入最大量的冷凍物品。

1. 取出冷凍室中所有的配件。 → *頁次 48*
2. 將食物直接存放在層架上以及冷凍室底層。

12.3 將食物存放到冷凍室的秘訣

- 請將食物密封包裝存放。
- 請勿將準備結凍的食物與已結凍的食物靠在一起。
- 請將食物平均分配在冷凍儲存盒內。
- 若想讓大量新鮮食物快速但溫和地冷凍，請您將它們放置到最上面的冷凍儲存盒內。
- 為確保機箱內空氣流通無礙，請將冷凍儲存盒完全推入至最底位置。

12.4 冷凍新鮮食物的秘訣

- 只可冷凍新鮮無損壞的食物。
- 請將食物分成適當份量再放入冷凍庫。
- 處理過的食物較生食更為合適。
- 冷凍蔬菜前，先將蔬菜洗淨、切菜、川燙。
- 冷凍水果前，先將水果洗淨、去核、去皮，最後可添加糖或抗壞血酸劑。
- 適合冷凍的食物包括例如：烘焙產品、魚和海鮮、肉、野味和家禽、剝殼的雞蛋、芝士、牛油、夸克、熟食和剩菜。
- 不適合冷凍的食物包括例如：生菜、蘿蔔、帶殼的雞蛋、葡萄、生蘋果和梨、乳酪、酸忌廉、法式奶油和蛋黃醬。

包裝冷凍食品

合適的包裝材料及正確的包裝方式能有效保留產品品質以及避免凍傷。

1. 請將食物放入包裝袋內。
2. 擠出袋中的空氣。
3. 將包裝封口密閉，使食物味道或水分不流失。
4. 可註明冷凍內容物和冷凍日期的包裝材料。

12.5 冷凍物品在 –18 °C 下的保存時間

食物	儲存時間
魚、香腸、準備好的菜餚、烘焙食品	可保存 6 個月
家禽、肉類	長達 8 個月
蔬菜、水果	可保存 12 個月

12.6 冷凍物品的解凍方式

⚠ **小心**
危害健康的風險!
解凍時會滋生細菌，冷凍物品可能變質。

- ▸ 請勿將半解凍或已解凍的冷凍食品重新冷凍。
- ▸ 只有將食物烹煮或油炸後才能重新冷凍。
- ▸ 食物的最長儲存時間則完全不再適用。

- 將肉類食物放在冷藏室解凍，例如：魚、肉、芝士和夸克。

- 麵包則放在室溫下解凍。
- 可即食或立即烹飪的則可使用微波爐、焗爐或氣體爐解凍。

13 除霜

13.1 冷藏室除霜

視功能而定，冷藏室背板會隨著機器運轉而形成露珠或結霜。冷藏室背板會自動除霜。
冷凝水或霜層會經由冷凝水導槽進入排水孔，然後抵達蒸發盤，不需擦拭。
為讓冷凝水能順利排出並且避免產生異味，請注意以下資訊：
→ *「清潔冷凝水排放通道和排水孔」，頁次48*。

13.2 冷凍室除霜

冷凍室無法自動除霜。冷凍室的霜層不利於冷凍食品結凍，也會提高耗電量。

為冷凍室除霜

請定期為冷凍室除霜。

1. 除霜前約 4 小時，請開啟 急速冷凍。
   → *「開啟手動 急速冷凍」，頁次42*
   讓食物達到極低的溫度，並可以在室溫下延長保存時間。
2. 請將冷凍儲存盒連同裡面的冷凍物品一起取出，然後放置在陰涼處。若有蓄冷器的話，請將它放到冷凍物品上。
3. 關掉電源。→ *頁次41*
4. 切斷機器的電源。
   拔除電源線插頭或關閉保險絲盒中的保險絲。
5. 為了加快除霜速度：請將裝入熱水的鍋子墊上隔熱鍋墊後，放入冷凍室內。
6. 用軟布或海綿擦去冷凝水。
7. 用乾淨軟布將冷凍室擦乾。
8. 接駁機器的電源。→ *頁次39*
9. 開機。→ *頁次41*
10. 將裝有冷凍物品的冷凍儲存盒重新放回機內。

14 清潔和保養

為了讓電器長時間保持功能順暢，請仔細清潔和保養。
無法接近的地方必須由客戶服務清潔。由客戶服務清潔可能需要收費。

14.1 清潔機器的事前準備工作

1. 關掉電源。→ *頁次41*
2. 切斷機器的電源。
   拔除電源線插頭或關閉保險絲盒中的保險絲。
3. 取出所有食物，放在陰涼處。
   若有冰寶，請將它放在食物上。
4. 若已結成霜層，請進行除霜。
5. 取出本電器中的所有配備零件和配件。→ *頁次48*
6. 拆下蔬果盒上方的層板。→ *頁次48*

14.2 清潔機器

⚠ **警告**

觸電風險!
濕氣滲入可能會導致觸電。
- ▸ 請勿使用蒸氣清潔機、高壓清潔機清潔本機。

照明設備或控制元件內若含有水氣，可能導致危險。
- ▸ 洗滌水不得接觸到照明設備或控制元件。

注意！
不合適的清潔劑會損壞機器表面。
- ▸ 請勿使用硬質百潔布或清潔海綿。
- ▸ 請勿使用腐蝕性或磨蝕性的清潔劑。
- ▸ 請勿使用酒精含量高的清潔劑。

若有液體流入排水孔，可能導致蒸發盤溢流。
- ▸ 切勿讓洗滌水流進排水孔。

若用洗碗機清洗配件和附件，它們可能因此變形或褪色。
- 切勿用洗碗機清洗配件和附件。

1. 為機器進行清潔的事前準備工作。
   → *頁次47*
2. 請用抹布、溫水和一些中性清潔劑來清潔電器、配備零件、配件和電器門密封件。
3. 請用柔軟乾布再徹底擦乾一遍。
4. 裝入配件，並安裝電器部件。
5. 接駁機器的電源。 → *頁次39*
6. 開機。 → *頁次41*
7. 放入食物。

14.3 清潔冷凝水排放通道和排水孔

為讓冷凝水能順利排出，請定期清潔冷凝水排放通道和排水孔。
- 請用棉花棒小心清潔冷凝水排放通道和排水孔。
  → *圖* **7**

14.4 取出配件

若想要徹底將配件清潔乾淨，請將它取出至機外。

取出層架

- 將層架拉出後取下。
  → *圖* **8**

取出抽取式層架

1. 用力將抽取式層架拉出至卡止凸耳脫開。
   → *圖* **9**
2. 將層架向下放低，然後晃動兩側即可取出。

取出門邊置物架

- 抬起門邊置物架然後取出。
  → *圖* **10**

取出蔬果盒

1. 將蔬果盒拉開到底。
2. 抬高蔬果盒前端 ① 然後取下 ②。
   → *圖* **11**

取出冷凍儲存盒

1. 將冷凍儲存盒拉開到底。
2. 抬起冷凍儲存盒前端 ① 然後拆下 ②。
   → *圖* **12**

14.5 拆卸設備部件

若想要徹底清潔本設備，有一些部件可從設備中拆出。

取出蔬果盒上方的層板

1. 將蔬果盒拉出。
2. 取出層架①並將它翻轉②。
   → *圖* **13**
3. 將下方蓋板的固定器往外推。
   → *圖* **14**
4. 將蓋板前端抬起①然後將後端拔出②。
   → *圖* **15**

15 排除故障

電器上發生的輕微故障，大多可以自行解決。聯絡客戶服務之前，請先利用故障排除資訊嘗試自行解決問題。如此可避免不必要的開銷。

⚠ **警告**

觸電風險!

維修不當可能發生危險。

- 只許由合資格的專業人員維修電器。
- 僅限使用原廠耗材維修電器。
- 若本電器的電線損壞，必須交由製造商或其客戶服務或具有類似資格的專業人員更換，以避免發生危險。

故障	原因及疑難排解
設備不製冷，顯示面板和照明亮起。	示範模式已啟動。 ▸ 請您執行設備自動檢查程序。 → *頁次51* ✔ 完成設備自動檢查程序後，設備將返回正常模式。
LED 照明不亮。	可能有不同的原因。 ▸ 請致電客戶服務。 您可在隨附的客戶服務目錄中找到客戶服務電話。
Home Connect無法正常運作	可能有不同的原因。 ▸ 請至www.home-connect.com。
溫度顯示器出現 E 或 d 。	電器有偵測到錯誤。 1. 關機。 → *頁次41* 2. 請切斷設備電源。 拔除電線插頭或關閉保險絲盒中的保險絲。 3. 靜待 5 分鐘後再重新為本裝置接上電源。 4. 螢幕上若一再出現此訊息，請聯絡客戶服務。 您可在隨附的客戶服務目錄中找到客戶服務電話。
溫度顯示器（冷凍室）閃爍。	冷凍室的溫度太高。 1. 按一下 ⌀。 ✔ 溫度顯示器（冷凍室）將短暫顯示冷凍室的最高溫度。然後溫度顯示器（冷凍室）又會重新顯示所設定的溫度。 2. 按一下⌀。 ✔ 溫度顯示器（冷凍室）不再閃爍。
警示音響起、溫度顯示器（冷凍室）閃爍、且⌀亮起。	可能有不同的原因。 ▸ 按一下 ⌀。 ✔ 隨即關掉警報功能。
	設備門已打開。 ▸ 請關閉設備門。

故障	原因及疑難排解
警示音響起、溫度顯示器（冷凍室）閃爍、且 亮起。	外部出氣口被擋住。 ▸ 請移除外部出氣口前的障礙物。
	儲存了大量新鮮食物。 ▸ 請勿超過冷凍能力。 → *「冷凍能力」，頁次46*
溫度偏離設定太多。	可能有不同的原因。 **1.** 關機。 → *頁次41* **2.** 約 5 分鐘後再重新開機。 → *頁次41* – 若溫度太高，請在數小時後再重新檢查一次。 – 若溫度太低，請在隔天再重新檢查。
冷藏室底部潮溼。	冷凝水排放通道或排水孔堵塞。 ▸ 請清潔冷凝水排放通道和排水孔。 → *頁次48*
本裝置發出低鳴聲、冒泡聲、類似摩打迴旋、液體潺流或輕敲的聲音。	並非故障。壓縮機正在運轉，例如冷凍機組、風扇。冷媒流過冷媒管路的聲音。壓縮機、開關或電磁閥正在啟動或關掉。 無需採取任何處理。
裝置發出異聲。	配件鬆動或卡死。 ▸ 請檢查所有可取出的配件，必要時請重新插入。
	瓶子或容器互相碰撞。 ▸ 請移動瓶罐，使之分開。
	急速冷凍 已啟動。 無需採取任何處理。

15.1 停電

停電時，設備內的溫度上升，這會縮短食物保存時間，冷凍食品的品質會下降。
若發生故障，您可以在本電器網站上的技術數據中找到冷凍食品的存放時間。

備註

- 停電時，請盡量減少打開設備的次數，也不要再放入其他食物。
- 請於停電後立即查看食物的品質。
  - 請清除掉開始解凍以及高於 5 °C 的冷凍食品。
  - 請烹煮或煎煮已稍微解凍的冷凍食品，可立即食用或重新冷凍。

15.2 執行裝置自檢程序

本電器具備電器自檢程序，會顯示可由客戶服務排除的故障。

1. 關掉電源。 → *頁次41*
2. 5 分鐘後再重新開啟電源。 → *頁次41*
3. 請在開機後的 10 秒內，將 ⁂（冷凍室）按住 3 至 5 秒，直到設備發出提示音。

✔ 開始執行裝置自我檢查程序。
✔ 正在執行設備自動檢查程序的期間，您會聽見長提示音。
✔ 設備自我檢查執行完畢後，若聽到 2 個提示音，而溫度顯示器上出現您所設定的溫度，這表示您的設備一切正常。設備隨即進入正常模式。
✔ 電器自檢程序結束後聽到5個訊號音，且⁂（冷凍室）閃爍10秒鐘時，請通知客戶服務。

16 存放和廢棄處理

16.1 將本機停止運轉

1. 關掉電源。 → *頁次41*
2. 切斷機器的電源。

   拔除電源線插頭或關閉保險絲盒中的保險絲。
3. 取出所有食物。
4. 為裝置除霜。 → *頁次47*
5. 清潔裝置。 → *頁次47*
6. 為確保內部通風，請讓電器保持打開。

16.2 舊機處理

舊機本身含有一些有用的原料，透過環保的方式加以處理可回收再利用。

⚠ **警告**
危害健康的風險!
孩童有可能將自己鎖進洗碗碟機內，造成生命的危險。

- ▸ 請勿取出層板和抽屜，以防止孩童爬入冰箱內。
- ▸ 讓確保孩童遠離報廢的舊機。

⚠ **警告**
火災風險!
若是管路損壞，則易燃冷媒及有害氣體可能會因外洩而自燃。

- ▸ 請勿損壞冷媒迴路的配管及絕緣體。

1. 拔除電源線插頭。
2. 剪斷電源線。
3. 請以環保的方式廢棄本電器。

   關於現行廢棄物處理的相關資訊，請向經銷商及當地或市政管理單位查詢。

17 客戶服務

有關您所在國家／地區的保養期和保養條款的詳細資訊，請向本公司的客戶服務、經銷商或本公司網站查詢。
聯絡客戶服務時，需要提供機器的產品編號（E-Nr.）和生產編號（FD）。
可在隨附的客戶服務目錄或本公司的網站查看客戶服務聯絡資料。

17.1 產品編號（E-Nr.）和生產編號（FD）

可在機器的家電銘牌上查看產品編號（E-Nr.）和生產編號（FD）。
→ 圖 1/4
如需快速重複查看機器資料和客戶服務電話號碼，可將資料加以記錄。

18 技術資料

冷媒、淨容量以及進一步技術資料均載於家電銘牌。
→ 圖 1/4

19 合規聲明

本公司BSH Hausgeräte GmbH在此嚴正聲明配有Home Connect功能的家用電器符合指令2014/53/EU的基本要求以及其他相關的規定。
有關詳細的 RED 合規聲明請上網在 www.gaggenau.com 機器產品頁面中的附加文件查看相關資訊。

2.4-GHz頻帶（2400–2483.5 MHz）：最大100 mW

BSH Hausgeräte GmbH
Carl-Wery-Straße 34
81739 München, GERMANY
www.gaggenau.com

GAGGENAU

9001666437 en, zh-hk 020623