GIGABYTE™

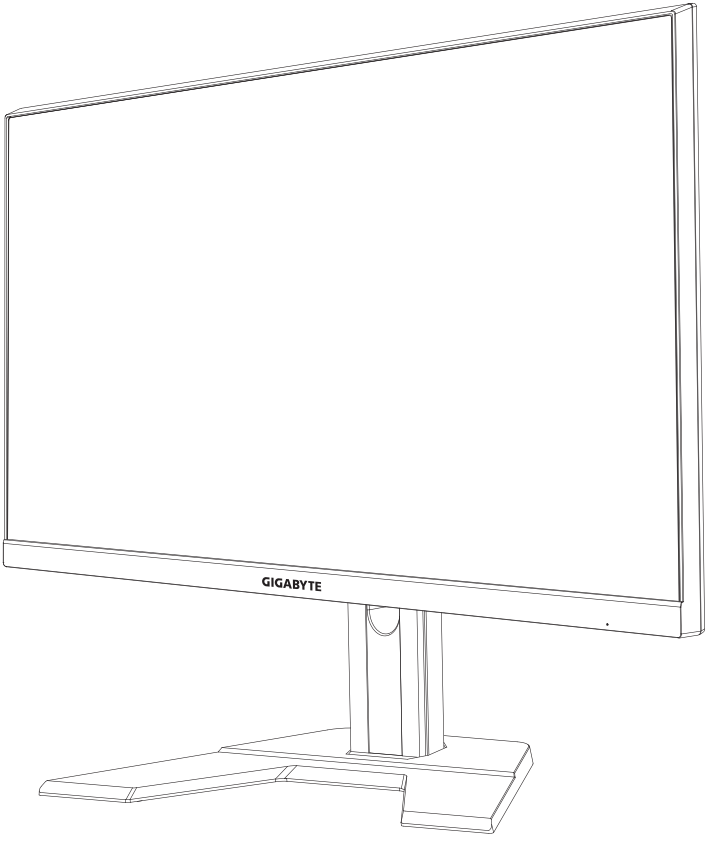

M27Q

GAMING MONITOR

USER GUIDE

27
2560 X 1440
QHD MONITOR
68.4cm

HDMI™
HIGH-DEFINITION MULTIMEDIA INTERFACE

Copyright

© 2020 GIGA-BYTE TECHNOLOGY CO., LTD. All rights reserved.

The trademarks mentioned in this manual are legally registered to their respective owners.

Disclaimer

Information in this manual is protected by copyright laws and is the property of GIGABYTE.

Changes to the specifications and features in this manual may be made by GIGABYTE without prior notice.

No part of this manual may be reproduced, copied, translated, transmitted, or published in any form or by any means without GIGABYTE's prior written permission.

- In order to assist in the use of this monitor, carefully read the User Guide.
- For more information, check on our website at: https://www.gigabyte.com

SAFETY INFORMATION

Regulatory Notices

United States of America, Federal Communications Commission Statement

Supplier's Declaration of Conformity

47 CFR § 2.1077 Compliance Information

Product Name: **LCD monitor**
Trade Name: **GIGABYTE**
Model Number: **M27Q**

Responsible Party – U.S. Contact Information: **G.B.T. Inc.**
Address: 17358 Railroad street, City Of Industry, CA91748
Tel.: 1-626-854-9338
Internet contact information: https://www.gigabyte.com

FCC Compliance Statement:
This device complies with Part 15 of the FCC Rules, Subpart B, Unintentional Radiators.
Operation is subject to the following two conditions: (1) This device may not cause harmful interference, and (2) this device must accept any interference received, including interference that may cause undesired operation.

This equipment has been tested and found to comply with the limits for a Class B digital device, pursuant to Part 15 of the FCC Rules. These limits are designed to provide reasonable protection against harmful interference in a residential installation. This equipment generates, uses and can radiate radio frequency energy and, if not installed and used in accordance with manufacturer's instructions, may cause harmful interference to radio communications. However, there is no guarantee that interference will not occur in a particular installation. If this equipment does cause harmful interference to radio or television reception, which can be determined by turning the equipment off and on, the user is encouraged to try to correct the interference by one or more of the following measures:

- Reorient or relocate the receiving antenna.
- Increase the separation between the equipment and receiver.

- Connect the equipment to an outlet on a circuit different from that to which the receiver is connected.
- Consult the dealer or an experienced radio/TV technician for help.

Canadian Department of Communications Statement

This digital apparatus does not exceed the Class B limits for radio noise emissions from digital apparatus set out in the Radio Interference Regulations of the Canadian Department of Communications. This class B digital apparatus complies with Canadian ICES-003.

Avis de conformité à la réglementation d'Industrie Canada

Cet appareil numérique de la classe B est conforme à la norme NMB-003 du Canada.

European Union (EU) CE Declaration of Conformity

This device complies with the following directives: Electromagnetic Compatibility Directive 2014/30/EU, Low-voltage Directive 2014/35/EU, ErP Directive 2009/125/EC, RoHS directive (recast) 2011/65/EU & the 2015/863 Statement.

This product has been tested and found to comply with all essential requirements of the Directives.

European Union (EU) RoHS (recast) Directive 2011/65/EU & the European Commission Delegated Directive (EU) 2015/863 Statement

GIGABYTE products have not intended to add and safe from hazardous substances (Cd, Pb, Hg, Cr^{+6}, PBDE, PBB, DEHP, BBP, DBP and DIBP). The parts and components have been carefully selected to meet RoHS requirement. Moreover, we at GIGABYTE are continuing our efforts to develop products that do not use internationally banned toxic chemicals.

European Union (EU) Community Waste Electrical & Electronic Equipment (WEEE) Directive Statement

GIGABYTE will fulfill the national laws as interpreted from the 2012/19/EU WEEE (Waste Electrical and Electronic Equipment) (recast) directive. The WEEE Directive specifies the treatment, collection, recycling and disposal of electric and electronic devices and their components. Under the Directive, used equipment must be marked, collected separately, and disposed of properly.

WEEE Symbol Statement

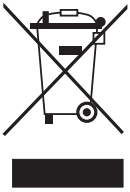

The symbol shown below is on the product or on its packaging, which indicates that this product must not be disposed of with other waste. Instead, the device should be taken to the waste collection centers for activation of the treatment, collection, recycling and disposal procedure.

For more information about where you can drop off your waste equipment for recycling, please contact your local government office, your household waste disposal service or where you purchased the product for details of environmentally safe recycling.

End of Life Directives-Recycling



The symbol shown below is on the product or on its packaging, which indicates that this product must not be disposed of with other waste. Instead, the device should be taken to the waste collection centers for activation of the treatment, collection, recycling and disposal procedure.

Déclaration de Conformité aux Directives de l'Union européenne (UE)

Cet appareil portant la marque CE est conforme aux directives de l'UE suivantes: directive Compatibilité Electromagnétique 2014/30/UE, directive Basse Tension 2014/35/UE, directive 2009/125/CE en matière d'écoconception, la directive RoHS II 2011/65/UE & la déclaration 2015/863.

La conformité à ces directives est évaluée sur la base des normes européennes harmonisées applicables.

European Union (EU) CE-Konformitätserklärung

Dieses Produkte mit CE-Kennzeichnung erfüllen folgenden EU-Richtlinien: EMV-Richtlinie 2014/30/EU, Niederspannungsrichtlinie 2014/30/EU, Ökodesign-Richtlinie 2009/125/EC, RoHS-Richtlinie 2011/65/EU erfüllt und die 2015/863 Erklärung.

Die Konformität mit diesen Richtlinien wird unter Verwendung der entsprechenden Standards zurEuropäischen Normierung beurteilt.

CE declaração de conformidade

Este produto com a marcação CE estão em conformidade com das seguintes Diretivas UE: Diretiva Baixa Tensão 2014/35/EU; Diretiva CEM 2014/30/EU; Diretiva Conceção Ecológica 2009/125/CE; Diretiva RSP 2011/65/UE e a declaração 2015/863.

A conformidade com estas diretivas é verificada utilizando as normas europeias harmonizadas.

CE Declaración de conformidad

Este producto que llevan la marca CE cumplen con las siguientes Directivas de la Unión Europea: Directiva EMC 2014/30/EU, Directiva de bajo voltaje 2014/35/EU, Directiva de Ecodiseño 2009/125/EC, Directiva RoHS 2011/65/EU y la Declaración 2015/863.

El cumplimiento de estas directivas se evalúa mediante las normas europeas armonizadas.

CE Dichiarazione di conformità

I prodotti con il marchio CE sono conformi con una o più delle seguenti Direttive UE, come applicabile: Direttiva EMC 2014/30/UE, Direttiva sulla bassa tensione 2014/35/UE, Direttiva Ecodesign EMC 2009/125/EC, Direttiva RoHS 2011/65/EU e Dichiarazione 2015/863.

La conformità con tali direttive viene valutata utilizzando gli Standard europei armonizzati applicabili.

Deklaracja zgodności UE Unii Europejskiej

Urządzenie jest zgodne z następującymi dyrektywami: Dyrektywa kompatybilności elektromagnetycznej 2014/30/UE, Dyrektywa niskonapięciowej 2014/35/UE, Dyrektywa ErP 2009/125/WE, Dyrektywa RoHS 2011/65/UE i dyrektywa2015/863.

Niniejsze urządzenie zostało poddane testom i stwierdzono jego zgodność z wymaganiami dyrektywy.

ES Prohlášení o shodě

Toto zařízení splňuje požadavky Směrnice o Elektromagnetické kompatibilitě 2014/30/EU, Směrnice o Nízkém napětí 2014/35/EU, Směrnice ErP 2009/125/ES, Směrnice RoHS 2011/65/EU a 2015/863.

Tento produkt byl testován a bylo shledáno, že splňuje všechny základní požadavky směrnic.

EK megfelelőségi nyilatkozata

A termék megfelelnek az alábbi irányelvek és szabványok követelményeinek, azok a kiállításidőpontjában érvényes, aktuális változatában: EMC irányelv 2014/30/EU, Kisfeszültségű villamos berendezésekre vonatkozó irányelv2014/35/EU, Környezetbarát tervezésről szóló irányelv 2009/125/EK, RoHS irányelv 2011/65/EU és 2015/863.

Δήλωση συμμόρφωσης ΕΕ

Είναι σε συμμόρφωση με τις διατάξεις των παρακάτω Οδηγιών της Ευρωπαϊκής Κοινότητας: Οδηγία 2014/30/ΕΕ σχετικά με την ηλεκτρομαγνητική συμβατότητα, Οοδηγία χαμηλή τάση 2014/35/EU, Οδηγία 2009/125/ΕΚ σχετικά με τον οικολογικό σχεδιασμό, Οδηγία RoHS 2011/65/ΕΕ και 2015/863.

Η συμμόρφωση με αυτές τις οδηγίες αξιολογείται χρησιμοποιώντας τα ισχύοντα εναρμονισμένα ευρωπαϊκά πρότυπα.

Japan Class 01 Equipment Statement

安全にご使用いただくために

接地接続は必ず電源プラグを電源につなぐ前に行って下さい。

また、接地接続を外す場合は、必ず電源プラグを電源から切り離してから行って下さい。

Japan VCCI Class B Statement

クラスB VCCI 基準について

この装置は、クラスB情報技術装置です。この装置は、家庭環境で使用することを目的としていますが、この装置がラジオやテレビジョン受信機に近接して使用されると、受信障害を引き起こすことがあります。

取扱説明書に従って正しい取り扱いをして下さい。

VCCI-B

China RoHS Compliance Statement

中国《废弃电器电子产品回收处理管理条例》提示性说明

为了更好地关爱及保护地球，当用户不再需要此产品或产品寿命终止时，请遵守国家废弃电器电子产品回收处理相关法律法规，将其交给当地具有国家认可的回收处理资质的厂商进行回收处理。

环保使用期限

Environment-friendly Use Period



此标识指期限（十年），电子电气产品中含有的有害物质不会发生外泄或突变、电子电气产品用户正常使用该电子电气产品不会对环境造成严重 污染或对其人身、财产造成严重损害的期限。

产品中有害物质的名称及含量:

部件名称	有害物质					
	铅（Pb）	汞（Hg）	镉（Cd）	六价铬（Cr+6）	多溴联苯（PBB）	多溴二苯醚（PBDE）
印刷电路板及其电子组件	×	○	○	○	○	○
液晶面板	×	○	○	○	○	○
外壳	○	○	○	○	○	○
外部信号连接头及线材	×	○	○	○	○	○

本表格依据 SJ/T 11364 的规定编制。
○：表示该有害物质在该部件所有均质材料中的含量均在 GB/T 26572 规定的限量要求以下。
×：表示该有害物质至少在该部件的某一均质材料中的含量超出 GB/T 26572 规定的限量要求。

限用物質含有情況標示聲明書
Declaration of the Presence Condition of the Restricted Substances Marking

設備名稱：液晶顯示器，型號（型式）： M27Q
Equipment name Type designation (Type)

單元 Unit	限用物質及其化學符號 Restricted substances and its chemical symbols					
	鉛 Lead (Pb)	汞 Mercury (Hg)	鎘 Cadmium (Cd)	六價鉻 Hexavalent chromium (Cr^{+6})	多溴聯苯 Polybrominated biphenyls (PBB)	多溴二苯醚 Polybrominated diphenyls ethers (PBDE)
塑料外框	○	○	○	○	○	○
後殼	○	○	○	○	○	○
液晶面板	—	○	○	○	○	○
電路板組件	—	○	○	○	○	○
底座	○	○	○	○	○	○
電源線	—	○	○	○	○	○
其他線材	—	○	○	○	○	○

備考1.〝超出0.1 wt %〞及〝超出0.01 wt %〞係指限用物質之百分比含量超出百分比含量基準值。
Note 1：〝Exceeding 0.1 wt %〞 and 〝exceeding 0.01 wt %〞indicate that the percentage content of the restricted substance exceeds the reference percentage value of presence condition.
備考2.〝○〞係指該項限用物質之百分比含量未超出百分比含量基準值。
Note 2：〝○〞indicates that the percentage content of the restricted substance does not exceed the percentage of reference value of presence.
備考3.〝—〞係指該項限用物質為排除項目。
Note 3：The 〝—〞indicates that the restricted substance corresponds to the exemption.

Safety Precautions

Read through the following *Safety Precautions* before using the monitor.

- Only use the accessories that are provided with the monitor or that which are recommended by the manufacturer.
- Keep the plastic packaging bag for the product in a place that cannot be reached by children.
- Before connecting the monitor to the power outlet, make sure that the voltage rating of the power cable is compatible with the power specification in the country where you are located.
- The power cord plug must be connected to a properly wired and grounded power outlet.
- Do not touch the plug with wet hands, otherwise easily cause electric shock.
- Place the monitor in a stable and well-ventilated place.
- Do not place the monitor near any heat sources such as electric radiators or direct sunlight.
- The holes or openings on the monitor are for ventilation. Do not cover or block the ventilation holes with any objects.
- Do not use the monitor near water, drinks, or all types of liquids. Failure to do so may result in electric shock or damage to the monitor.
- Make sure to unplug the monitor from the power outlet before cleaning.
- As the screen surface is easy to be scratched, avoid touching the surface with any hard or sharp object.
- Use a soft lint-free cloth instead of a tissue to wipe the screen. You may use a glass cleaner to clean the monitor if required. However, never spray the cleaner directly onto the screen.
- Disconnect the power cable if the monitor is not being used for a long period of time.
- Do not attempt to disassemble or repair the monitor yourself.

CONTENTS

Safety Information 3
- Regulatory Notices 3
- Safety Precautions 10

Introduction 12
- Unpacking 12
- Package Contents 14
- Product Overview 15

Getting Started 17
- Installing the Monitor Base 17
- Adjusting the Viewing Angle 19
- Installing a Wall-Mount Bracket (Optional) 20
- Making Connections 22

Using the Device 23
- Turning the Power On/Off 23
- User Comfort Recommendations 24
- Selecting the Input Source 24

Operations 25
- Quick Menu 25
- Configure the Device Settings 33

Appendices 43
- Specifications 43
- Supported Timing List 44
- Troubleshooting 45
- Basic Care 46
- Notes on USB Charging 46
- GIGABYTE Service Information 46

INTRODUCTION

Unpacking

1. Open the upper cover of the packaging box. Then observe the unpacking label attached on the inner cover.
2. Making sure the box is in the correct orientation, carefully lay the box on the stable surface.

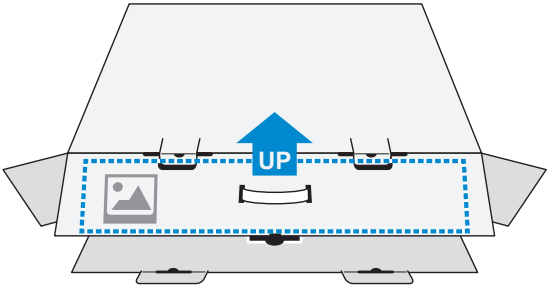

3. Open the inner cover.

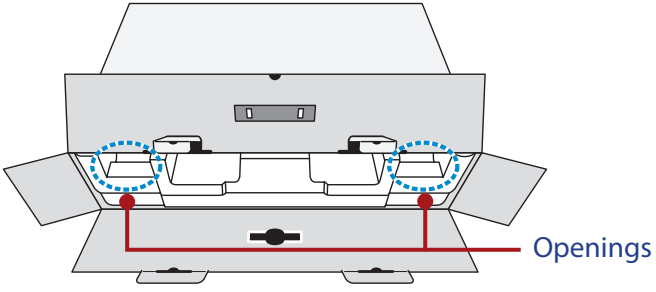

4. Grab the EPS foam assembly (through the openings) to pull it out of the box.

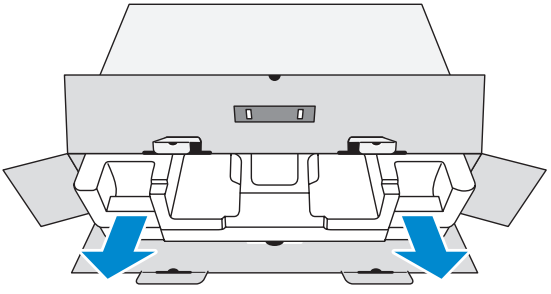

5. Remove the items from the upper EPS foam.

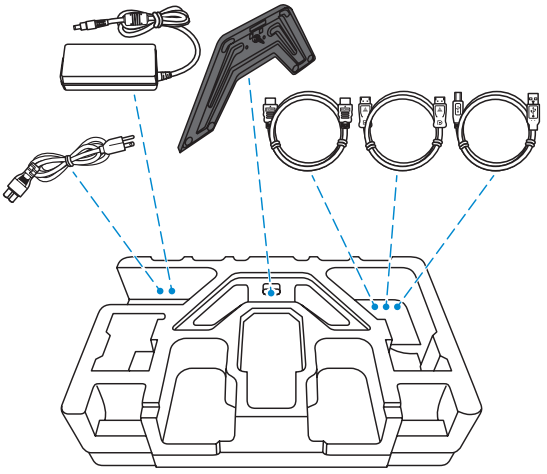

6. Remove the upper EPS foam. Then you can remove the monitor from the lower EPS foam.

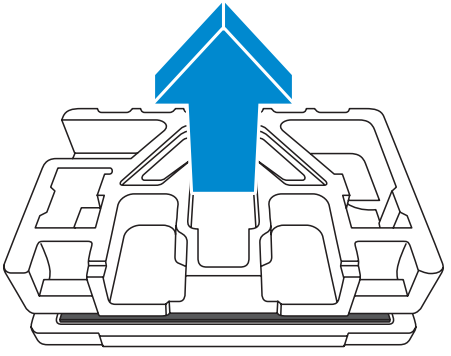

Package Contents

The following items come with your packaging box. If any of them is missing, please contact your local dealer.

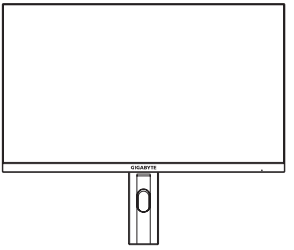

Monitor

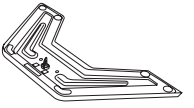

Monitor Base

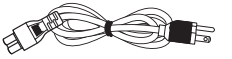

Power Cable

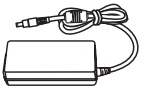

Power Adapter

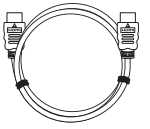

HDMI Cable

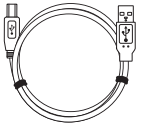

USB Cable

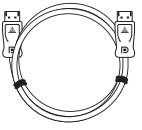

DP Cable



Quick Start Guide



Warranty Card

Note: Please keep the packaging box and packing materials for future transportation of the monitor.

Product Overview

Front View

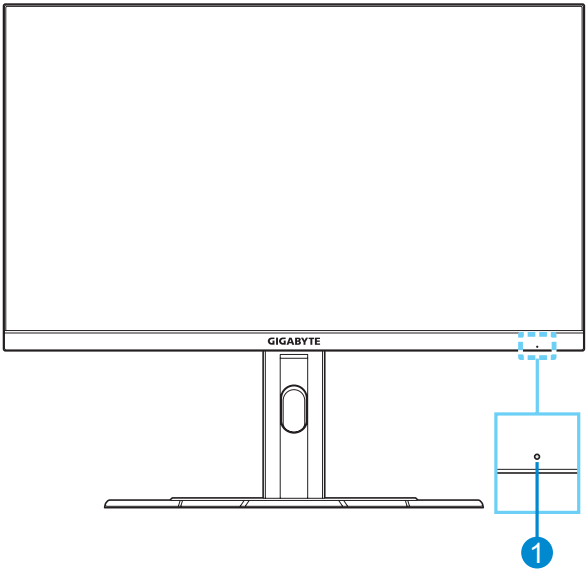

1 Power LED

Rear View

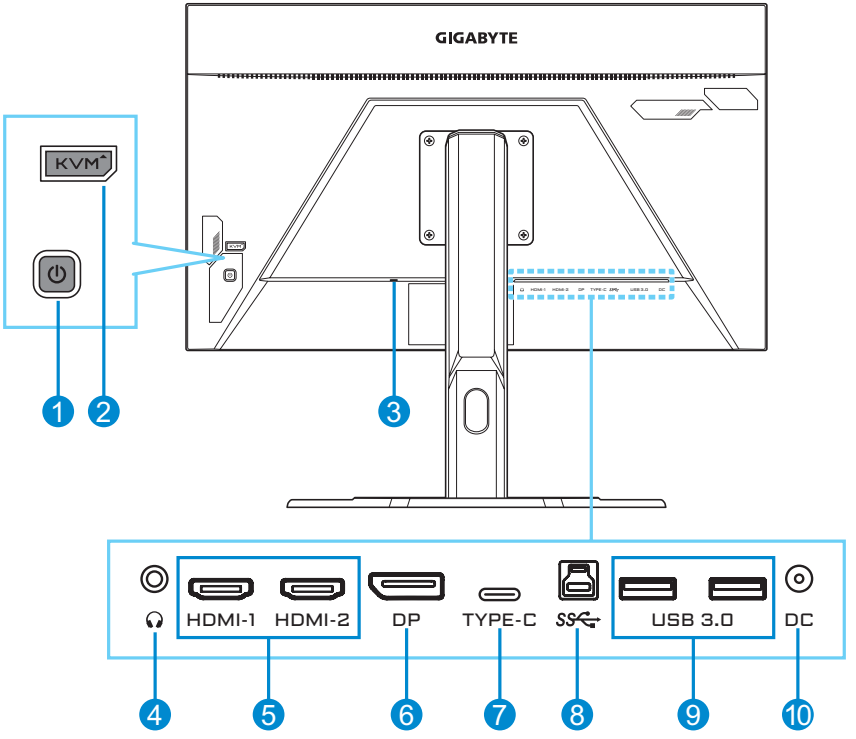

1	Control button	6	DisplayPort
2	KVM button	7	USB Type-C port
3	Kensington lock	8	USB upstream port
4	Headphone jack	9	USB 3.0 ports (x2)
5	HDMI ports (x2)	10	DC IN jack

GETTING STARTED

Installing the Monitor Base

1. Place the monitor on the lower EPS foam, with the screen facing down.
2. Align the monitor base with the standoff underneath the stand. Then attach the base onto the stand.

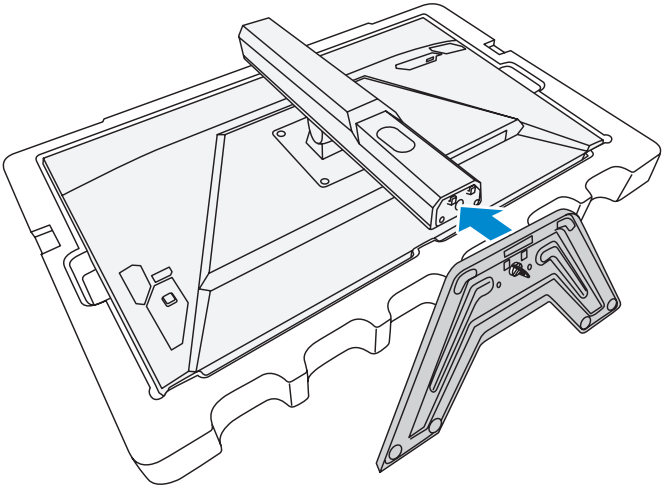

3. Lift the screw ring and turn it clockwise to secure the monitor base in place.

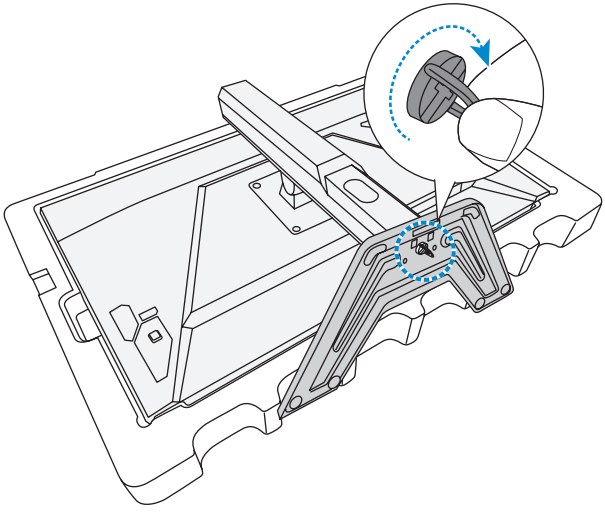

4. Lift the monitor to an upright position and place it on a table.
5. Remove the small block of EPS foam located in between the rear of the screen and the stand. Then remove the safety plate from its slot.

Note: By removing the safety plate, you can now adjust the screen to the desired height.

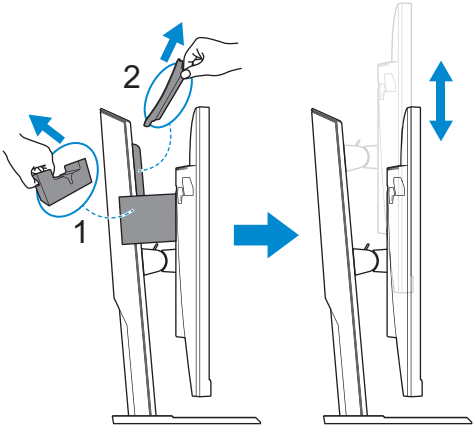

Adjusting the Viewing Angle

Note: Hold the monitor base so that the screen does not topple when you make the adjustment.

Adjusting the Tilt Angle

Tilt the screen forward or backward to the desired viewing angle (5˚ to 20˚).

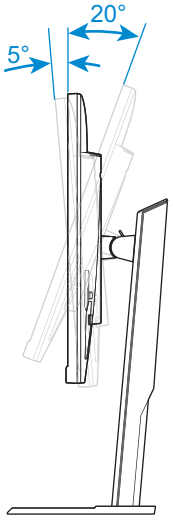

Adjusting the Screen Height

Lower or raise the screen to the desired height (0 to 130mm).

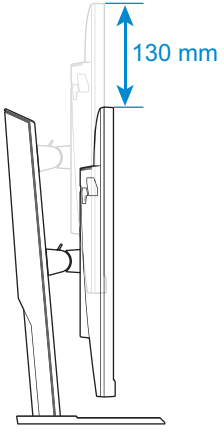

Installing a Wall-Mount Bracket (Optional)

Use only the 100 x 100 mm wall mount kit recommended by the manufacturer.

1. Place the monitor on the lower EPS foam, with the screen facing down.
2. Remove the screws securing the stand to the monitor.

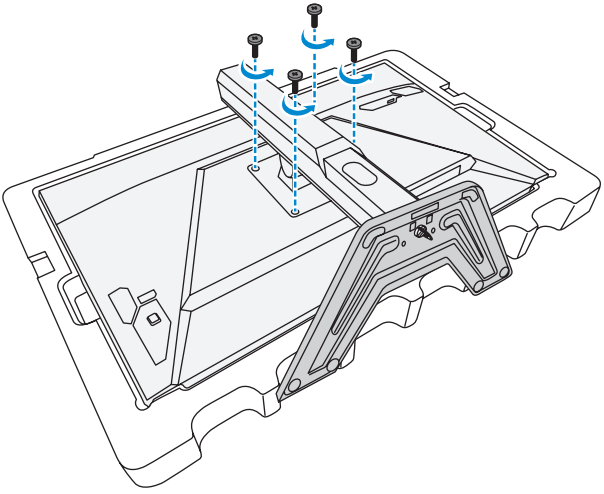

3. Remove the stand.

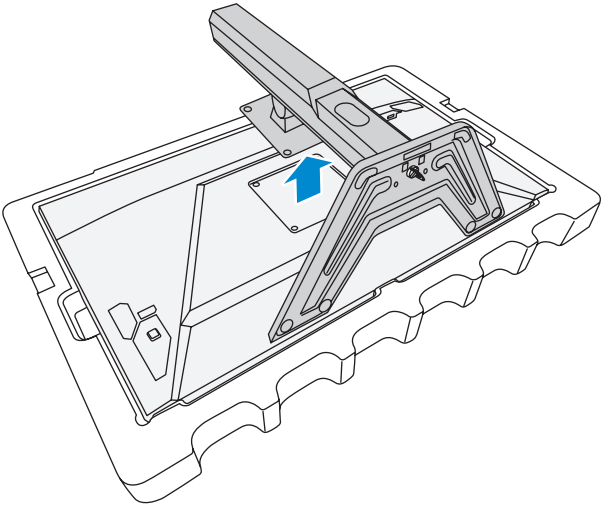

4. Attach the mounting bracket to the mounting holes at the rear of the monitor. Then use the screws to secure the bracket in place.

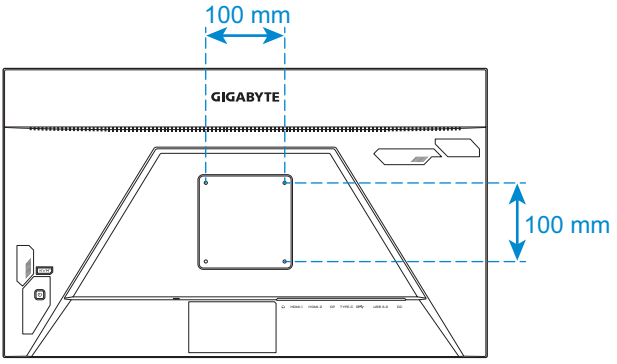

Note: To mount the monitor on the wall, refer to the installation guide that is included in the wall-mount bracket kit.

Making Connections

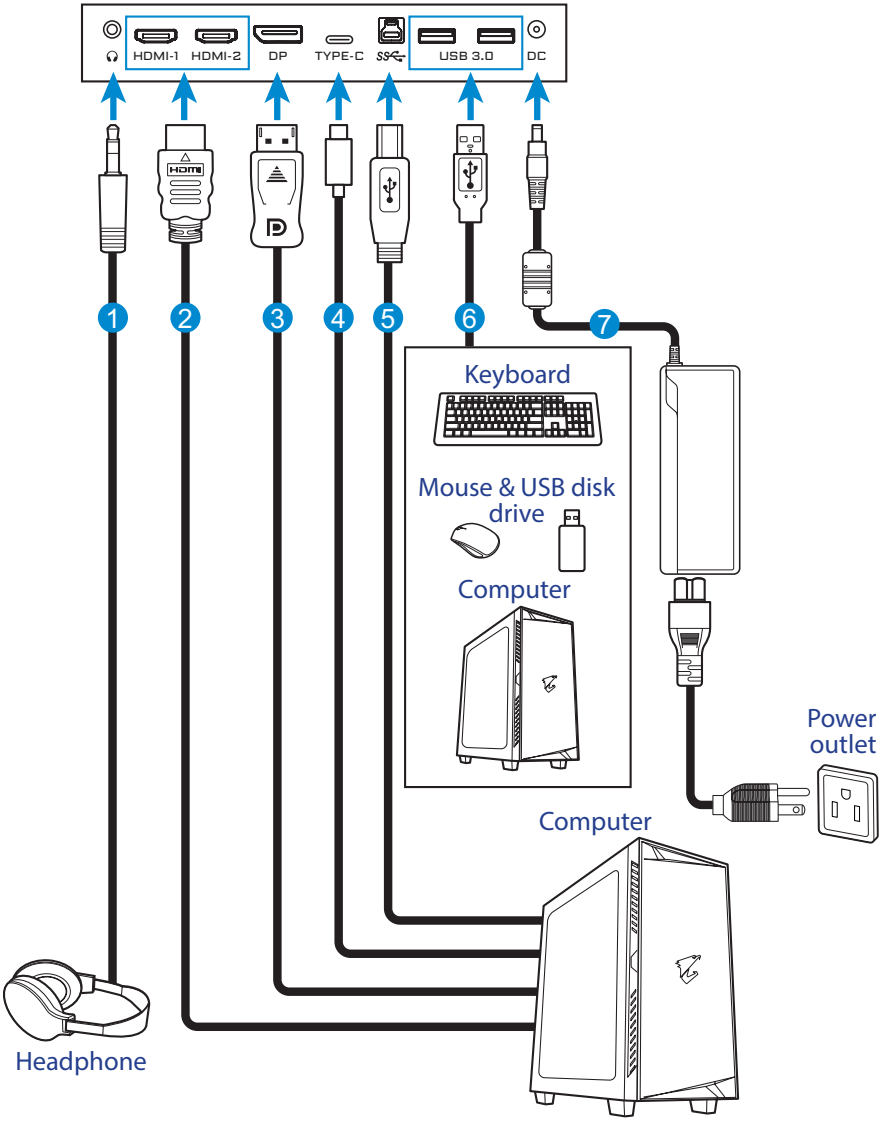

1 Headphone cable
2 HDMI cable
3 DisplayPort cable
4 USB Type-C cable
5 USB (A-Male to B-Male) cable
6 USB cable
7 Power adapter and power cable

USING THE DEVICE

Turning the Power On/Off

Power On

1. Connect the power cable to the power adapter.
2. Connect the power adapter to the DC IN jack at the rear of the monitor.
3. Connect the power cable to a power outlet.
4. Press the **Control** button to turn on the monitor. The Power LED will light in white, indicating the monitor is ready to use.

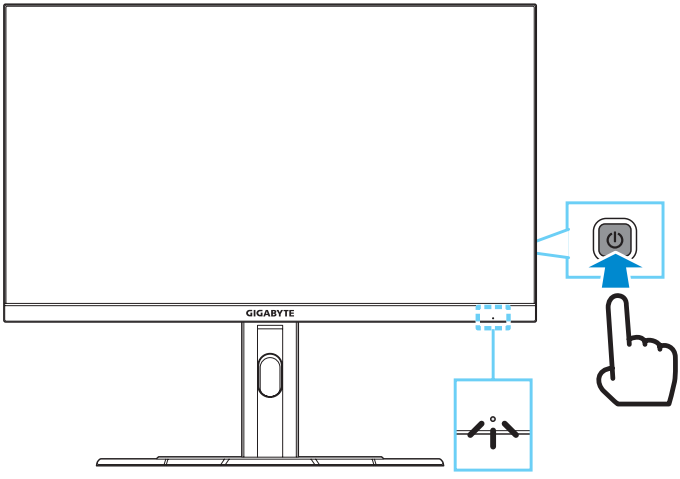

Note: If no signal, the monitor will show **No Signal** notification for a while. Then, the monitor will go to power saving mode and the Power LED lights white and starts blinking with a period of one second.

Power Off

Press the **Control** button for 2 seconds to turn off the monitor.

Note: When the **Main** menu appears on the screen, you can also turn off the monitor by moving the **Control** button down (). Refer to page 27.

User Comfort Recommendations

The following are some tips for comfortable viewing of your monitor:

- Optimal viewing distances for monitors range from approximately 510 mm to 760 mm (20″ to 30″).
- A general guideline is to position the monitor such that the top of the screen is at or slightly below your eye-height when you are comfortably seated.
- Use adequate lighting for the type of work you are performing.
- Take regular and frequent breaks (at least for 10 minutes) every half-hour.
- Be sure to periodically look away from your monitor screen and focus on a far object for at least 20 seconds during the breaks.
- Eye exercise can help reduce eye strain. Repeat these exercises frequently: (1) look up and down (2) slowly roll your eye (3) move your eyes diagonally.

Selecting the Input Source

1. Move the **Control** button right (◈) to enter the **Input** menu.
2. Move the **Control** button up/down (◈) to select the desired input source. Then press the **Control** button to confirm.

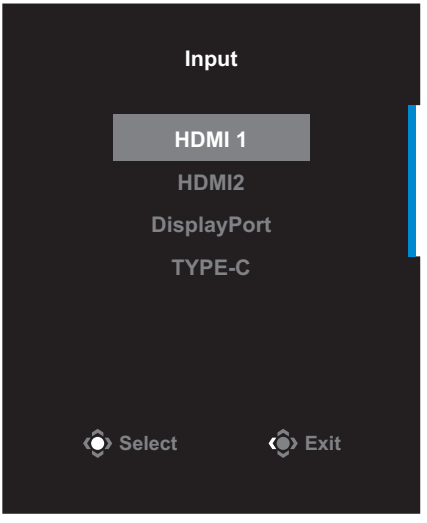

OPERATIONS

Quick Menu

Hot Key

By default, the **Control** button has been assigned with the specific function.

Note: To change the preset hot key function, refer to the "Quick Switch" section on page 40.

To access the hot key function, do the following:

- Move the **Control** button up (◈) to enter the **Black Equalizer** menu.

  Move the **Control** button up/down (◈) to adjust the setting and press the **Control** button to confirm.

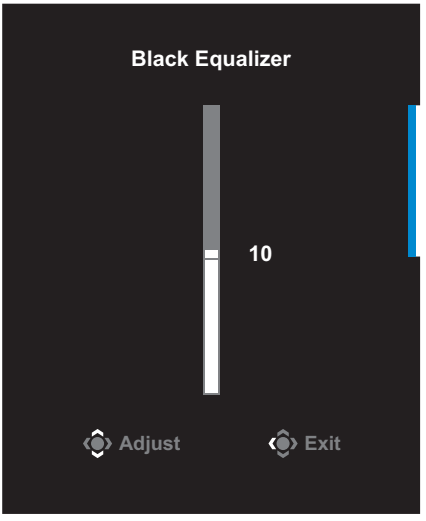

- Move the **Control** button down (◈) to enter the **Picture Mode** menu.

  Move the **Control** button up/down (◈) to select the desired option and press the **Control** button to confirm.

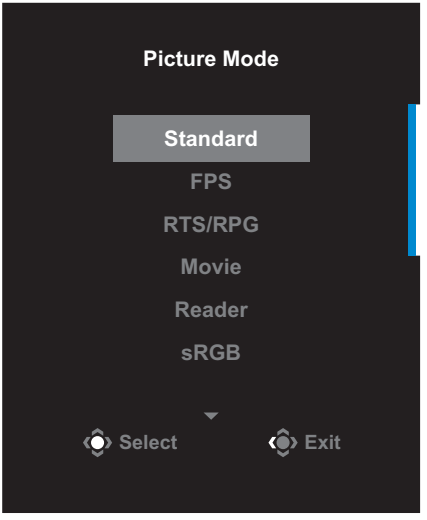

- Move the **Control** button left (◈) to enter the **Volume** menu.

  Move the **Control** button up/down (◈) to adjust the headphone volume level and press the **Control** button to confirm.

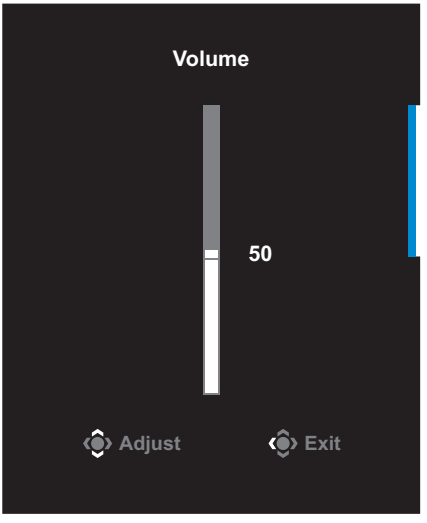

- Move the **Control** button right (◈) to enter the the **Input** menu. Refer to the "Selecting the Input Source" section.

Note: To close the menu, move the **Control** button left (◈).

Function Key Guide

Press the **Control** button to display the **Main** menu.

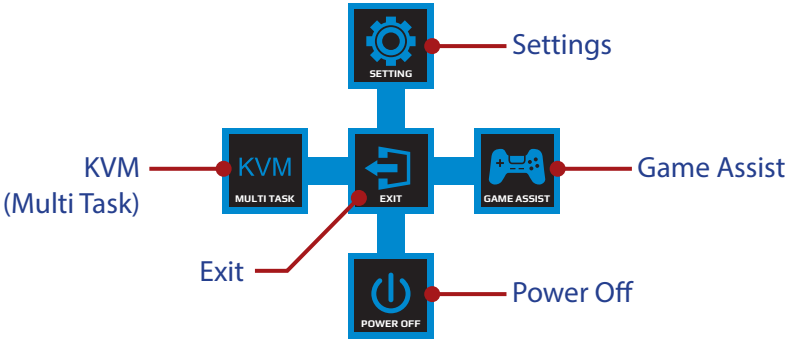

Then use the **Control** button to select the desired function and configure the related settings.

KVM

When the **Main** menu appears on the screen, move the **Control** button left (◈) to enter the **KVM** menu.

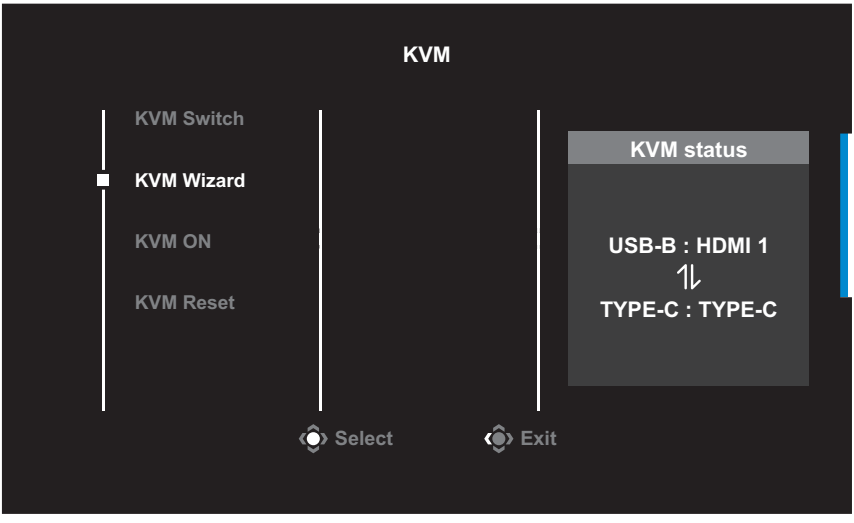

- **KVM Switch**: Switch the input source that has been assigned to USB-B or Type-C connection in the ***KVM Wizard*** settings.
  When there are several input signals connected to the device, a message box will appear on the screen once the system detected USB Type-C input signal.



To switch to USB Type-C input source, simply press the **KVM** button or the **Control** button.

However, when there is no input signal from currently selected input source, the system will return to the previous connected input source.

Note: This option will be disabled if the KVM button function is disabled (**KVM OFF**).

- **KVM Wizard**: Configure the KVM related settings.

  Set the input source to be bound with USB Type-B connection first, and then following with USB Type-C connection.

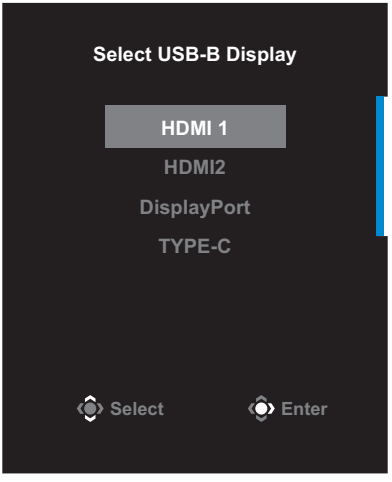

USB-B Display Selection

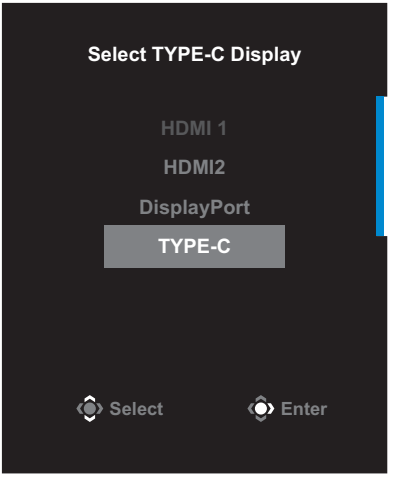

TYPE-C Display Selection

Note: If you set the **USB-B Display** setting to **TYPE-C**, the **TYPE-C Display** menu option will automatically be disabled. You will then see the **KVM status** in the **KVM Wizard** page as below.

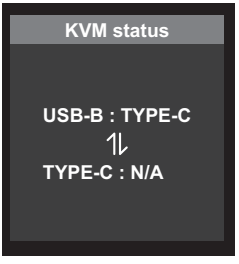

- **KVM ON/OFF**: Enable/Disable the **KVM** button function.
  - √ Select **ON** to enable the **KVM** button function. Once the system detected USB Type-C input signal, a message box will appear on the screen.



    Press the **KVM** button or the **Control** button to switch to USB Type-C input source.

    Note: When the **KVM** button function is enabled, the **KVM ON** will be displayed on the left panel.

  - √ Select **OFF** to disable the **KVM** button function.

    Note: When the **KVM** button function is disabled, the **KVM OFF** will be displayed on the left panel.

- **KVM Reset**: Restore the KVM default settings.
  - √ HDMI 1 input source is bound with USB Type-B connection.
  - √ USB Type-C input source is bound with USB Type-C connection.
  - √ The **KVM ON/OFF** function is set to **ON**.

Game Assist

When the **Main** menu appears on the screen, move the **Control** button right (◈) to enter the **Game Assist** menu.

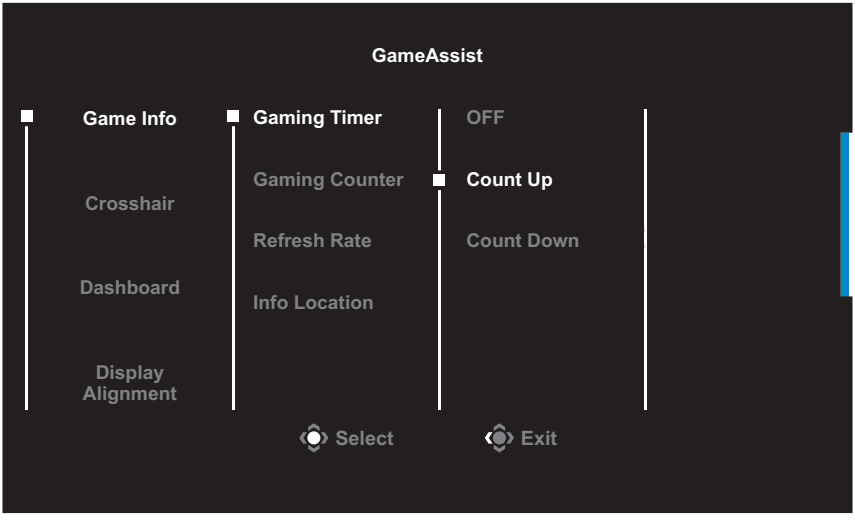

- **Game Info**: Configure the FPS (First Person Shooting) game related settings.
  - √ Select **Gaming Timer** to select countdown timer mode. To disable this function, set the setting to **OFF**.
  - √ Select **Gaming Counter** or **Refresh Rate** to enable/disable the gaming counter or real-time refresh rate setting.
  - √ Select **Info Location** to specify the location of the information to be shown on the screen.



- **Crosshair**: Select the desired crosshair type to suit your gaming environment. It makes aiming much easier.
- **Dashboard**: Configure the dashboard settings.

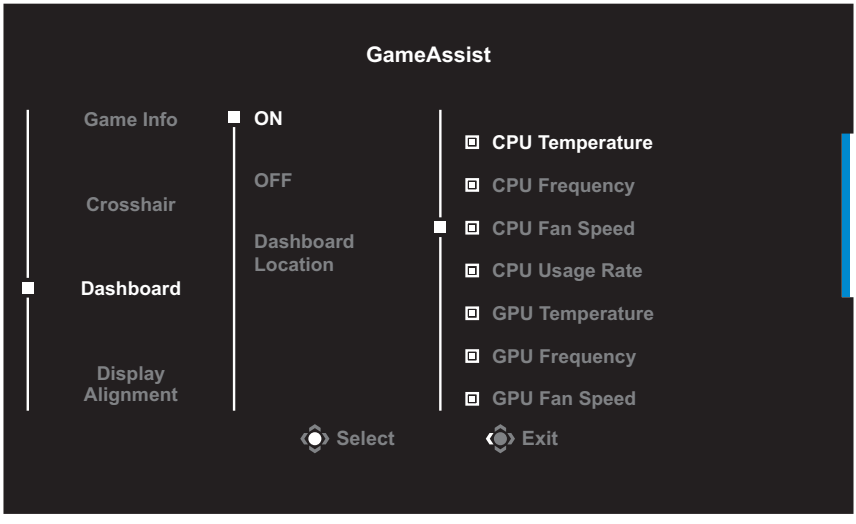

√ **ON**: Enable the function. Then select the desired option(s) to be shown on the screen.

√ **OFF**: Disable the function.

√ **Dashboard Location**: Specify the location of the Dashboard information to be shown on the screen. Once the Dashboard configuration is complete, it will transfer the system data to the SOC through the USB port and display the value of the selected function(s) on the screen.

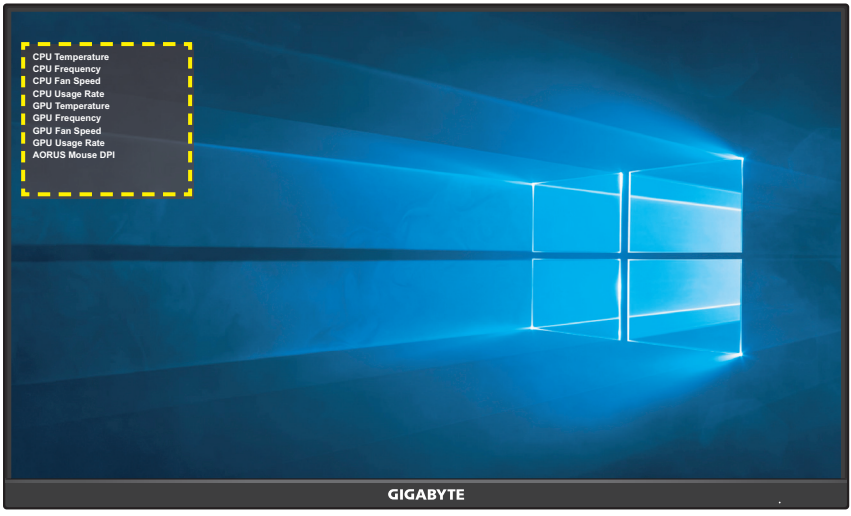

Note: Make sure the USB cable is properly connected to the USB upstream port of the monitor and the USB port of your computer.

- **Display Alignment**: When the function is enabled, it displays the alignment lines on the four sides of the screen, providing handy tool for you to line up multiple monitors perfectly.

Configure the Device Settings

When the **Main** menu appears on the screen, move the **Control** button up (◈) to enter the **Settings** menu.

Note: Use the **Control** button to navigate through the menu and make adjustments.

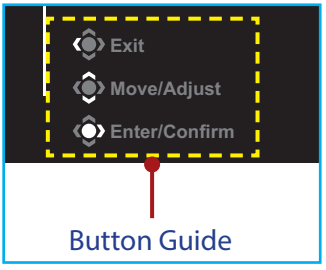

Gaming

Configure the game related settings.

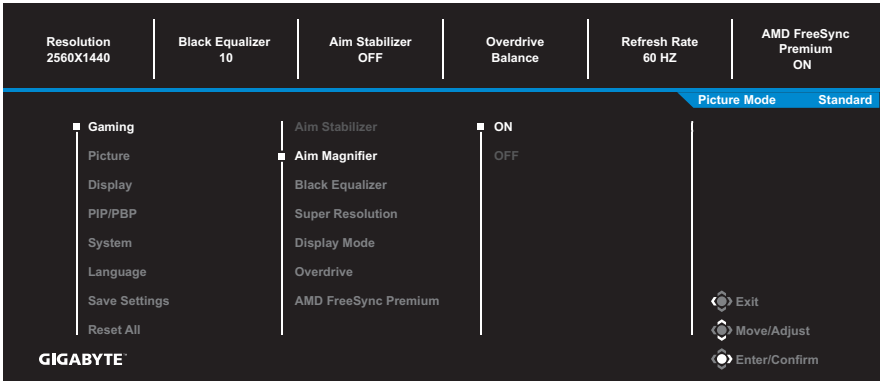

Item	Description
Aim Stabilizer	When this function is enabled, it reduces the motion blur in a fast moving games. **Note:** This function is not available under the following conditions: - when the frequency setting is lower than 100Hz. - when the current source is HDR.
Aim Magnifier	When this function is enabled, it will enlarge the middle of screen.

Item	Description
Black Equalizer	Adjust the brightness of the black areas.
Super Resolution	Sharpen the low resolution images.
Display Mode	Select the aspect ratio of the screen. • Full: Scale the input image to fill the screen. Ideal for 16:9 aspect images. • Aspect: Display the input image without geometric distortion filling as much of the screen as possible. • 1:1: Display the input image in its native resolution without scaling. • 22”W(16:10): Display the input image as if on a 22”W monitor of 16:10 aspect ratio. • 23”W(16:9): Display the input image as if on a 23”W monitor of 16:9 aspect ratio. • 23.6”W(16:9): Display the input image as if on a 23.6”W monitor of 16:9 aspect ratio. • 24”W(16:9): Display the input image as if on a 24”W monitor of 16:9 aspect ratio. **Note:** 1:1, 22”W(16:10), 23”W(16:9), 23.6W”(16:9), and 24”W(16:9) options will be disabled when the AMD FreeSync Premium function is activated.
Overdrive	Improve the response time of the LCD monitor.
AMD FreeSync Premium	When this function is enabled, it eliminates the screen lag and tearing while playing games.

Picture

Configure the image related settings.

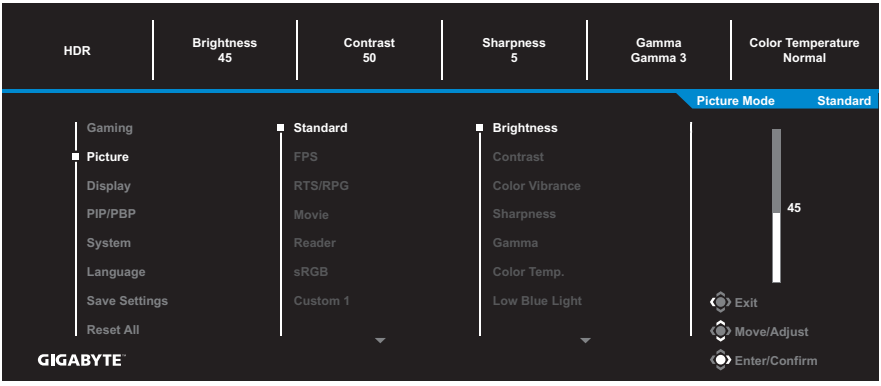

Select the one of the preset picture mode.

- Standard: For editing documents or browsing websites.
- FPS: For playing FPS (First Person Shooting) games.
- RTS/RPG: For playing RTS (Real-Time Strategy) or RPG (Role-Playing Game) games.
- Movie: For watching movies.
- Reader: For viewing documents.
- sRGB: For viewing photos and graphics on the computer.
- Custom 1: Customized picture mode settings.
- Custom 2: Customized picture mode settings.
- Custom 3: Customized picture mode settings.

Then you can configure the following image settings.

Item	Description
Brightness	Adjust the brightness of the image.
Contrast	Adjust the contrast of the image.
Color Vibrance	Adjust the intensity of the more muted colors.
Sharpness	Adjust the sharpness of the image.
Gamma	Adjust the middle level of luminance.

Item	Description
Color Temperature	Select the color temperature. **Note:** Select **User Define** to customize the color temperature by adjusting the red (R), green (G), or blue (B) level according to your preference.
Low Blue Light	Reduce the amount of blue light exposure from the screen. • Level 0: No change. • Level 1~10: The higher the level, the more blue light will be reduced. **Note:** Level 10 is optimized setting. It is compliance with TUV Low Blue Light Certification.
DCR	Adjust the black level of the image to achieve the optimum contrast.
Senseye Demo	Split the screen in half (2 windows). The image of the selected mode with its default settings will appear on the left window and the adjusted image with the new settings will appear on the right window.
Reset Picture	Reset all **Picture** settings to the default settings.

Display

Configure the display screen related settings.

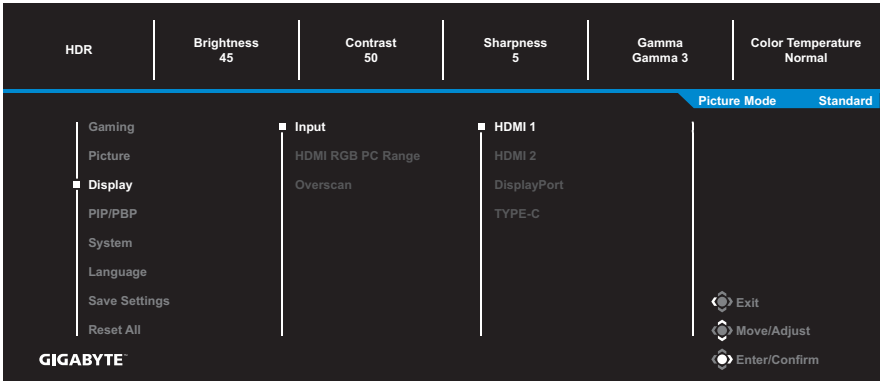

Item	Description
Input	Select the input source.
HDMI RGB PC Range	Select an appropriate RGB range setting or let the monitor to detect it automatically. **Note:** This option is only available for HDMI input.
Overscan	When this function is enabled, it slightly enlarges the input image to hide the outermost edges of the image. **Note:** This option is only available for HDMI input.

PIP/PBP

Configure the multi-picture related settings.

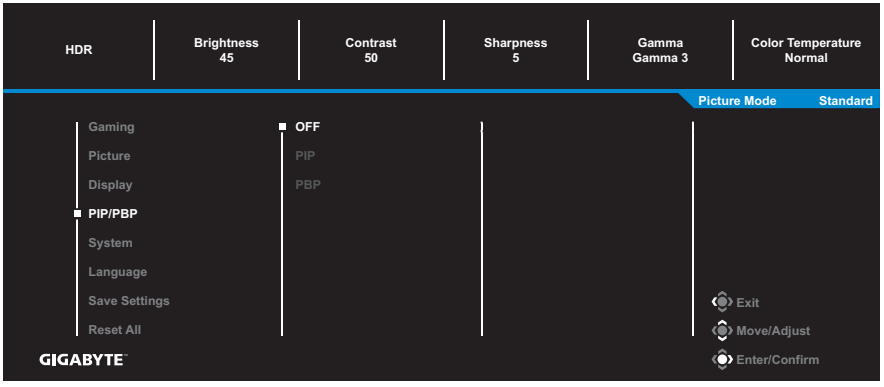

Item	Description
OFF	Disable the PIP/PBP function.
PIP	Split the screen into 2 parts (main window and inset window). • Source: Change the input source for the inset window. • PIP Size: Adjust the inset window size. • Location: Move the inset window position. • Display Switch: Swap the two windows. • Audio Switch: Select which audio source you want to hear the sound from.
PBP	Display 1x1 split screen (left and right windows). • Source: Change the input source for the right window. • PBP Size: Adjust the window size. • Display Switch: Swap the two windows. • Audio Switch: Select which audio source you want to hear the sound from.

Note: PIP/PBP is not compatible with HDR and AMD FreeSync Premium functions.

System

Configure the system related settings.

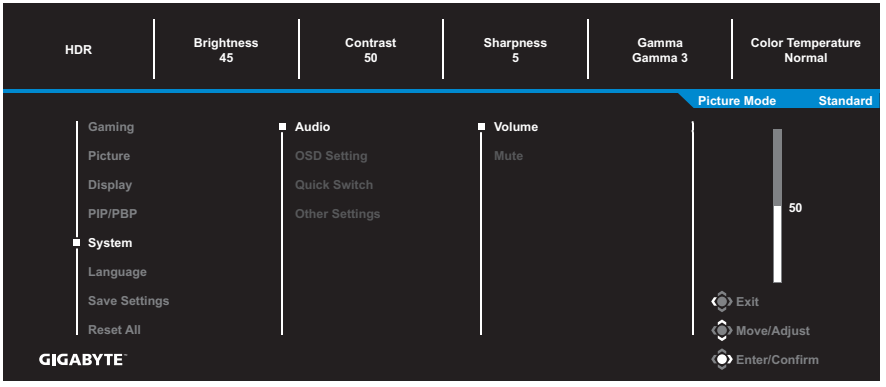

Item	Description
Audio	Configure the audio settings. • Volume: Adjust the volume level. • Mute: Enable/Disable the mute function.
OSD Settings	Configure the on-screen display (OSD) menu related settings. • Display Time: Set the length of time the OSD menu remains on the screen. • OSD Transparency: Adjust the OSD menu transparency. • OSD Lock: When this function is enabled, no OSD adjustment is allowed. **Note:** To disable the OSD lock function, press the **Control** key. When the message appears on the screen, select **Yes** to confirm. 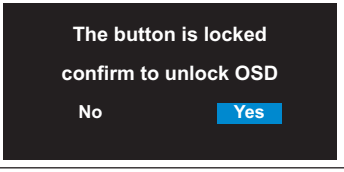

Item	Description
Quick Switch	Assign the function of the hot keys. Available options: Aim Stabilizer, Black Equalizer, Low Blue Light, Volume, Input, Contrast, Brightness, and Picture Mode. The default setting of the hot keys as below: ⇨ Up (): Black Equalizer ⇨ Down (): Picture Mode ⇨ Right (): Input ⇨ Left (): Volume
Other Settings	• Resolution Notice: When this function is enabled, the recommended resolution message will appear on the screen when the monitor switches to another input source. • Input Auto Switch: When this function is enabled, it automatically switches to an available input source. • Auto Power OFF: When this function is enabled, the monitor will automatically turn off after a certain amount of time. • DisplayPort Ver.: Set the DisplayPort version to 1.1 or 1.2+HDR. **Note:** • To enable the HDR effect for the DP port, you may need to set the DP1.2 and enable the 10-bit color output in your graphics card. • Make sure to configure this option based on the DisplayPort version supported by your graphics card.

Language

Select an available language for the OSD menu.

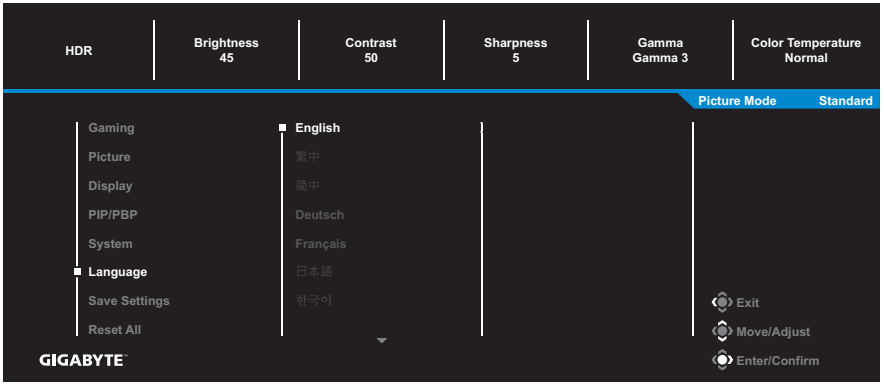

Save Settings

Set the personalized OSD configurations for Setting1, Setting2, or Setting3.

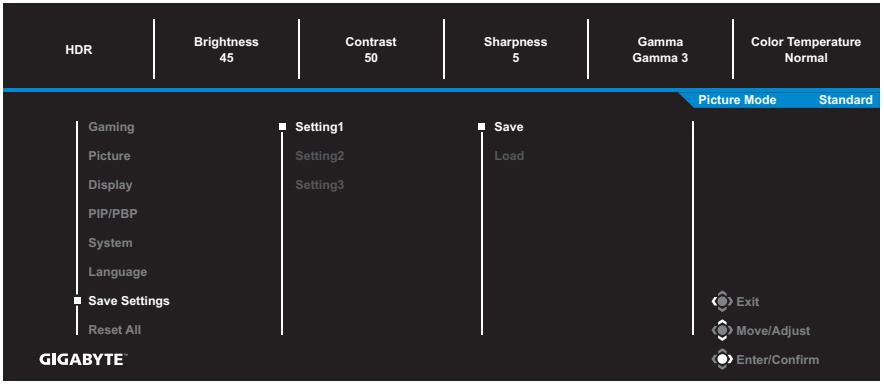

Item	Description
Save	Save the customized settings.
Load	Load the saved settings.

Reset All

Restore the monitor to its factory default settings.

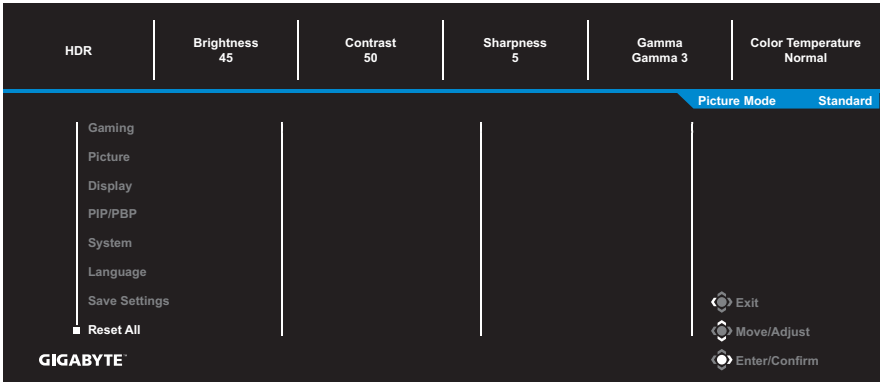

APPENDICES

Specifications

Item	Specifications
Panel Size	27-inch
Aspect Ratio	16:9
Resolution	2560 x 1440
Refresh Rate	170Hz
LED Life	30,000 hours
Pixel Pitch	0.2331 x 0.2331
Response Time	0.5ms (MPRT)
Brightness	350nits (typ.)
Contrast Ratio	1000:1 (typ.)
Dynamic Contrast Ratio	12M:1 (typ.)
Color Depth	16.7M
Active Display Area	596.736 (H) x 335.664 (V)
Viewing Angle	178°(H) / 178°(V)
Frequency	170Hz
Input/Output Terminals	• 2x HDMI 2.0 • 1x DP1.2 • 1x Headphone • 1x USB upstream • 2x USB 3.0 (downstream, 5V/0.9A) • 1x USB Type-C (5V/2A)
Power Supply	AC 100~240V at 50/60Hz
AC Adapter Model	Asian Power Devices Inc. DA-65C19 Dongguan Yingju Power Co., Ltd. YJS065I-1903420D
Power Consumptions	• On: 58W (Max.) • Standby: 0.5W • Off: 0.3W
Dimensions (W x H x D)	615.1 x 533.6 x 202.97 mm (with stand)

Item	Specifications
Weight	• 5.5 ±0.5 kgs (with stand) • 3.3 ±0.5 kgs (without stand)
Temperature Range (operation)	0°C to 40°C

Note: Specifications subject to change without notice.

Supported Timing List

Timing List	HDMI 2.0	Display Port 1.2 / USB Type-C
640x480@60Hz	V	V
640x480@75Hz	V	V
720x480@60Hz	V	V
800x600@60Hz	V	V
800x600@75Hz	V	V
1024x768@60Hz	V	V
1024x768@75Hz	V	V
1280x720@60Hz	V	V
1280x720@120Hz	V	V
1920x1080@60Hz	V	V
1920x1080@120Hz	V	V
1920x1080@144Hz	V	V
2560x1440@60Hz	V	V
2560x1440@120Hz	V	V
2560x1440@144Hz	V	V
2560x1440@165Hz	X	V
2560x1440@170Hz	X	V

Troubleshooting

Problem	Possible Solution(s)
No power	• Make sure the power cable is properly connected to the power source and the monitor. • Check the cable and plug to make sure they are not broken. • Make sure the monitor is turned on.
No image appears on the screen	• Make sure the monitor and the computer are properly connected and both devices are turned on. • Make sure you have selected the correct input source. Refer to page 24 or 37. • Adjust the **Brightness** and **Contrast** settings. Refer to page 35.
The image does not fill the entire screen	• Try different **Display Mode** (aspect ratio) setting. Refer to page 34.
The colors are distorted	• Make sure the input signal cable is properly connected. • Configure the image related settings. Refer to the "Picture" section.
No sound or volume is low	• Make sure the headphone cable is properly connected. • Adjust the volume level. Refer to page 26 or 39. • Adjust your computer sound related settings.

Note: If the problem persists, please contact our customer service for further assistance.

Basic Care

When the screen becomes dirty, do the following to clean the screen:

- Wipe the screen with your soft, lint-free cloth to remove any residual dust.
- Spray or apply the cleaning fluid onto a soft cloth. Then wipe the screen gently with the damp cloth.

Note:

- Make sure that the cloth is damp, but not wet.
- When wiping, avoid applying excessive pressure on the screen.
- Acidic or abrasive cleaners can damage the screen.

Notes on USB Charging

The following devices are not compatible with BC 1.2 of CDP mode. When the Hub is connected to a PC, these devices cannot be charged using the USB cable.

Vendor	Device	PID/VID
Apple	IPad	PID_129A/VID_05AC
Samsung	Galaxy Tab2 10.1	PID_6860/VID_04E8
Samsung	GALAXY TabPro	PID_6860/VID_04E8

GIGABYTE Service Information

More service information, please visit GIGABYTE official website: https://www.gigabyte.com/