Allied Vision



Alvium 1800 U

-500

- AR0521 CMOS sensor
- ALVIUM image processing
- USB3 Vision
- Various hardware options

Model without hardware options

Versatile USB camera with AR0521 sensor

Alvium USB cameras are designed for use in both machine vision and embedded applications. Offering high image quality and reducing workload for the host, Alvium enables innovation among system designers. The innovative ALVIUM System on Chip (SoC) performs image corrections and preprocessing tasks onboard the camera instead of the host computer. Unlike FPGAs commonly used in machine vision cameras, the ALVIUM SoC is extremely power efficient. With Alvium, integrating hardware and software can be done effortlessly, which ultimately reduces development time. The ON Semi AR0521 CMOS sensor enables high-quality imaging at 5.0 megapixel and 68 frames per second. Color models ship with an IR cut filter, monochrome and S-Mount models ship without a filter or protection glass.

Benefits and features

- Monochrome (1800 U-500m) and color (1800 U-500c) models
- ALVIUM® Technology for on-board image processing
- USB3 Vision interface for GenICam SFNC features
- Platform concept that enables the operation of different Alvium camera models with a common software
- Micro-B USB 3.1 Gen 1 connector with screw locks for industrial applications
- Precise sensor-to-lens mount alignment
- Standard M3 mounting holes for top and bottom mounting, standard M2 mounting holes for front mounting
- Industrial performance for both embedded and machine vision applications

Allied Vision

Hardware options

- Housings: Bare board, open housing, or closed housing
- Various lens mounts: C-Mount, CS-Mount, or S-Mount
- USB connector position: Select between the back panel or the left side of the camera (seen from the sensor side).

For more information on hardware options, including product codes and technical data, such as technical drawings and mass, see the Alvium Cameras Hardware Options document.

Available accessories

- Tripod adapter
- USB 3.1 Gen 1 cable with screw connectors in various lengths
- I/O cables in various lengths
- Various lenses and Allied Vision S-Mount lenses with focal lengths 2.97 - 12 mm

Specifications

Alvium 1800 U	**-500**
Interface	USB3 Vision
Resolution	2592 (H) × 1944 (V)
Spectral range	300 to 1100 nm
Sensor	ON Semi AR0521SR
Sensor type	CMOS
Shutter mode	Rolling shutter
Sensor size	Type 1/2.5
Pixel size	2.2 µm × 2.2 µm
Lens mounts (available)	C-Mount, CS-Mount, S-Mount
Max. frame rate at full resolution	68 fps at ≥375 MByte/s, Mono8
ADC	10 Bit
Image buffer (RAM)	256 KB
Non-volatile memory (Flash)	1024 KB
Imaging performance Imaging performance data is based on the evaluation methods in the EMVA 1288 Release 3.1 standard for characterization of image sensors and cameras. Measurements are typical values for monochrome models measured without optical filter.	
Quantum efficiency at 529 nm	79 %
Temporal dark noise	5.9 e^-
Saturation capacity	9890 e^-
Dynamic range	63 dB

Alvium 1800 U	-500
Absolute sensitivity threshold	7.1 e^-
Output	
Bit depth	Max. 10 Bit
Monochrome pixel formats	Mono8, Mono10
YUV color pixel formats	YCbCr411_8_CbYYCrYY, YCbCr422_8_CbYCrY, YCbCr8_CbYCr
RGB color pixel formats	BayerRG8, BayerRG10, BayerRG10p, BGR8, RGB8 (default)
General purpose inputs/outputs (GPIOs)	
TTL I/Os	4 programmable GPIOs
Operating conditions/dimensions	
Operating temperature	+5 °C to +65 °C housing temperature (with heat sink)
Power requirements (DC)	Power over USB 3.1 Gen 1 | External power 5.0 V
Power consumption	USB power: 2.2 W (typical) | Ext. power: 2.4 W (typical)
Mass	15 g (bare board)
Body dimensions (L × W × H in mm)	13 × 26 × 26 (bare board, standard), 13 × 30 × 26 (bare board, 90°)
Regulations	2011/65/EU, including amendment 2015/863/EU (RoHS)

Quantum efficiency

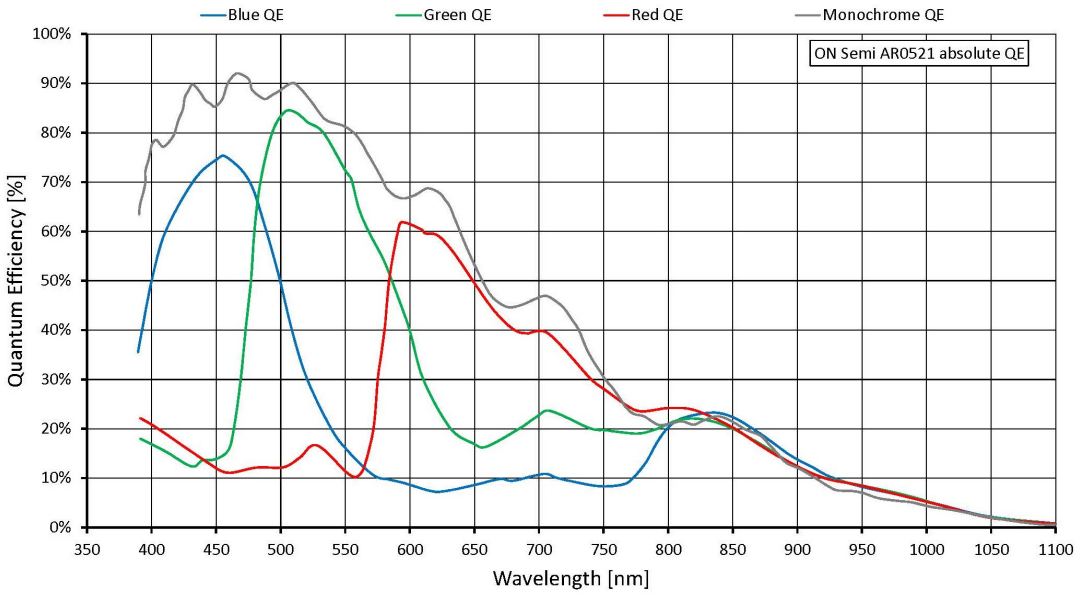

Features

Image control

Auto control

- Auto exposure
- Auto gain
- Auto white balance (color models)
- Auto features regions control
- Auto features algorithms control

Other image controls

- Black level
- Contrast
- De-Bayering up to 5×5 (color models)
- Exposure time
- Gain
- Gamma
- Hue (color models)
- Saturation (color models)
- DPC (factory calibrated)
- FPNC (factory calibrated)
- Region of interest (ROI)
- Reverse X/Y

Camera control

- Sync out modes: Trigger ready, input
- Temperature monitoring (sensor board)
- LED luminance control
- Firmware update

Technical drawing

Camera hardware options
The Alvium Cameras Hardware Options document informs about submodels, such as bare board or open housing cameras with different lens mounts.

Bare Board

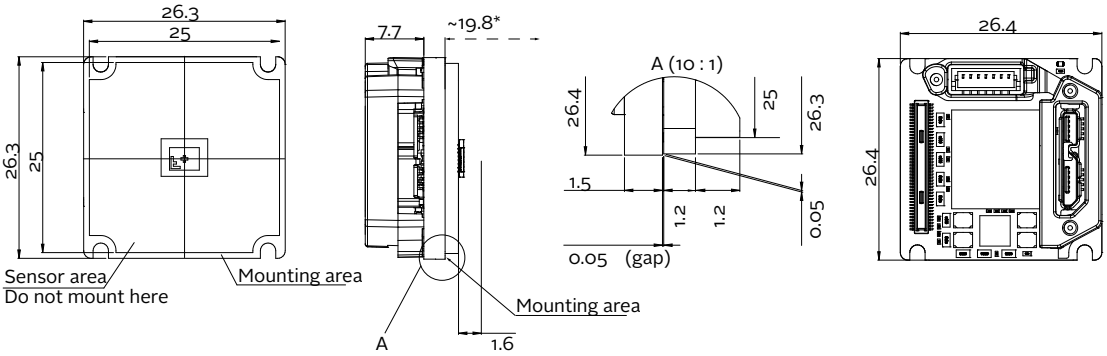

*Mechanical length for C-Mount, for other mounts and details, see the user guide.

Bare board 90°

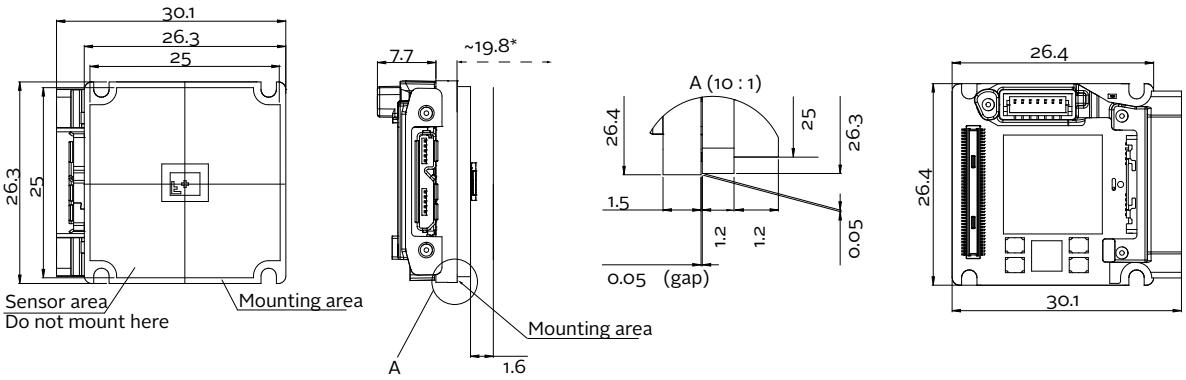

*Mechanical length for C-Mount, for other mounts and details, see the user guide.