SIEMENS

# SIPART

# Electropneumatic positioners SIPART PS100

Operating Instructions


Introduction and safety information 1

Description 2

Installing and mounting 3

Connecting 4

Local operation 5

Commissioning 6

Parameter assignment and addressing 7

Troubleshooting 8

Service and maintenance 9

Technical specifications 10

Dimension drawings 11

Product documentation and support A


6DR710.
6DR711.


03/2020
A5E45863537-AD

## Legal information

### Warning notice system

This manual contains notices you have to observe in order to ensure your personal safety, as well as to prevent damage to property. The notices referring to your personal safety are highlighted in the manual by a safety alert symbol, notices referring only to property damage have no safety alert symbol. These notices shown below are graded according to the degree of danger.

**⚠ DANGER**

indicates that death or severe personal injury **will** result if proper precautions are not taken.

**⚠ WARNING**

indicates that death or severe personal injury **may** result if proper precautions are not taken.

**⚠ CAUTION**

indicates that minor personal injury can result if proper precautions are not taken.

**NOTICE**

indicates that property damage can result if proper precautions are not taken.

If more than one degree of danger is present, the warning notice representing the highest degree of danger will be used. A notice warning of injury to persons with a safety alert symbol may also include a warning relating to property damage.

### Qualified Personnel

The product/system described in this documentation may be operated only by **personnel qualified** for the specific task in accordance with the relevant documentation, in particular its warning notices and safety instructions. Qualified personnel are those who, based on their training and experience, are capable of identifying risks and avoiding potential hazards when working with these products/systems.

### Proper use of Siemens products

Note the following:

**⚠ WARNING**

Siemens products may only be used for the applications described in the catalog and in the relevant technical documentation. If products and components from other manufacturers are used, these must be recommended or approved by Siemens. Proper transport, storage, installation, assembly, commissioning, operation and maintenance are required to ensure that the products operate safely and without any problems. The permissible ambient conditions must be complied with. The information in the relevant documentation must be observed.

### Trademarks

All names identified by ® are registered trademarks of Siemens AG. The remaining trademarks in this publication may be trademarks whose use by third parties for their own purposes could violate the rights of the owner.

### Disclaimer of Liability

We have reviewed the contents of this publication to ensure consistency with the hardware and software described. Since variance cannot be precluded entirely, we cannot guarantee full consistency. However, the information in this publication is reviewed regularly and any necessary corrections are included in subsequent editions.

Siemens AG
Division Process Industries and Drives
Postfach 48 48
90026 NÜRNBERG
GERMANY

Document order number: A5E45863537
℗ 03/2020 Subject to change

Copyright © Siemens AG 2020.
All rights reserved

# Table of contents


**1 Introduction and safety information ..... 5**

1.1 Document history ..... 5

1.2 Product compatibility ..... 5

1.3 Precondition for use ..... 6

1.4 Checking the consignment ..... 6

1.5 Security information ..... 6

**2 Description ..... 9**

2.1 Overview of device components ..... 9

**3 Installing and mounting ..... 11**

3.1 Freezing of the exhaust air outlets ..... 11

3.2 Mounting to linear actuator ..... 12

3.3 Mounting to part-turn actuator ..... 15

**4 Connecting ..... 19**

4.1 Grounding ..... 19

4.2 Electrical connection ..... 20

4.3 Pneumatic connection ..... 20

4.3.1 Structure of pneumatic connection ..... 20

4.3.2 Pneumatic connection ..... 21

4.3.3 Behavior in case of failure of the electrical auxiliary power and/or the supply pressure PZ ..... 21

**5 Local operation ..... 23**

**6 Commissioning ..... 25**

6.1 Initialize in "NO INIT" operating mode ..... 26

**7 Parameter assignment and addressing ..... 27**

7.1 Overview of the menu structure ..... 27

7.2 QUICK START [01] ..... 28

7.3 SETUP [02] ..... 29

7.4 MAINT/DIAGS [03] ..... 30

**8 Troubleshooting ..... 33**

8.1 Device status symbols ..... 33

8.2 Info IDs, error messages and corrective measures ..... 34

**9 Service and maintenance ..... 37**

9.1 Return procedure ..... 37

9.2 Disposal ..... 38
**10 Technical specifications ..... 39**
10.1 Input ..... 39
10.2 Output ..... 39
10.3 Rated conditions ..... 40
10.4 Pneumatic data ..... 40
10.5 Mechanical construction ..... 41
10.6 Controller ..... 42
**11 Dimension drawings ..... 43**
**A Product documentation and support ..... 45**
A.1 Product documentation ..... 45
A.2 Technical support ..... 46
**Index ..... 47**

# Introduction and safety information 1

## 1.1 Document history

The most important changes in the documentation when compared with the respective previous edition are given in the following table.

| Edition | Comment |
|---|---|
| 03/2020 | • Changes for FW 1.02.00, HART device revision 1<br>• Changed parameter IDs<br>• In "QUICK START" menu: New parameter "VALVE TYPE" [06]<br>• In "SETUP" menu:<br>– For "BEHAVIOR DO" [01] new function "POS"<br>– For "BEHAVIOR DO" [01] function "NONE" changed to "ERR M"<br>– New parameter "DO POS LIMIT" [03]<br>• In "MAINT/DIAG" menu:<br>– The parameters "PIEZO 1" [56] and "PIEZO 2" [57] were renamed to "PILOT 1" [04] and "PILOT 2" [05].<br>– New parameter "HW Version" [06]<br>• "Troubleshooting" chapter: Addition info IDs are displayed for the status of the digital input (DI) in the "AUTO" operating mode: 6E, 6F, 6H |
| 11/2019 | • Text changes<br>• New article number 6DR710. for polycarbonate lid with window<br>• Material extended in section "Technical specifications > Mechanical construction (Page 41)".<br>• Change in section "Technical specifications > Controller (Page 42) > Deadband"<br>• Description of parameters improved in section "Parameter assignment and Addressing (Page 27)". |

## 1.2 Product compatibility

| Manual edition | Comments | Device revision | Compatible version of device integration package |
|---|---|---|---|
| 03/2020 | New device features | FW: 1.02.00<br>Device revision 1 | - |
| 11/2019 | New manual edition | FW: 1.00.00<br>Device revision 1 | - |

## 1.3 Precondition for use

This device left the factory in good working condition. In order to maintain this status and to ensure safe operation of the device, observe these instructions and all the specifications relevant to safety.

Observe the information and symbols on the device. Do not remove any information or symbols from the device. Always keep the information and symbols in a completely legible state.

## 1.4 Checking the consignment

1. Check the packaging and the delivered items for visible damages.
2. Report any claims for damages immediately to the shipping company.
3. Retain damaged parts for clarification.
4. Check the scope of delivery by comparing your order to the shipping documents for correctness and completeness.

**⚠ WARNING**

**Using a damaged or incomplete device**

Risk of explosion in hazardous areas.

- Do not use damaged or incomplete devices.

## 1.5 Security information

Siemens provides products and solutions with industrial security functions that support the secure operation of plants, systems, machines and networks.

In order to protect plants, systems, machines and networks against cyber threats, it is necessary to implement – and continuously maintain – a holistic, state-of-the-art industrial security concept. Siemens' products and solutions constitute one element of such a concept.

Customers are responsible for preventing unauthorized access to their plants, systems, machines and networks. Such systems, machines and components should only be connected to an enterprise network or the internet if and to the extent such a connection is necessary and only when appropriate security measures (e.g. firewalls and/or network segmentation) are in place.

For additional information on industrial security measures that may be implemented, please visit
https://www.siemens.com/industrialsecurity.

Siemens' products and solutions undergo continuous development to make them more secure. Siemens strongly recommends that product updates are applied as soon as they are available and that the latest product versions are used. Use of product versions that are no longer supported, and failure to apply the latest updates may increase customer's exposure to cyber threats.

To stay informed about product updates, subscribe to the Siemens Industrial Security RSS Feed under
https://www.siemens.com/industrialsecurity.

# Description

# 2

## 2.1 Overview of device components

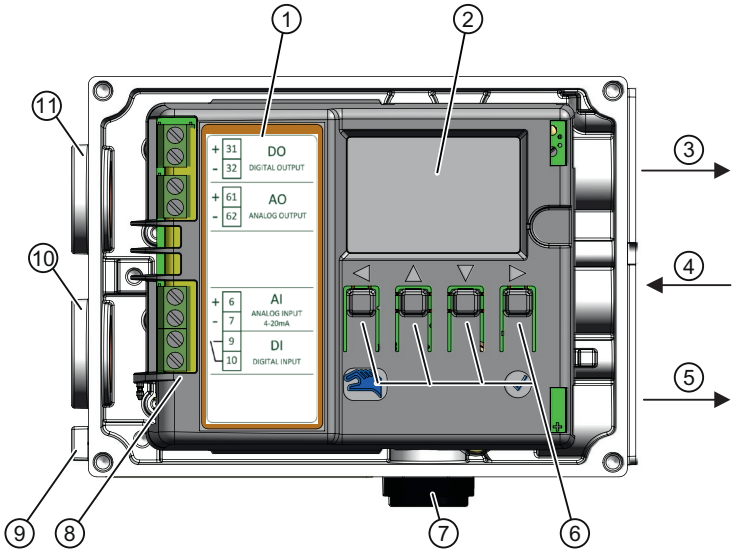


① Wiring diagram on module cover
② Local display
③ Output: Actuating pressure Y1
④ Input: Supply pressure PZ
⑤ Output: Actuating pressure Y2 for double-acting actuators
⑥ Buttons
⑦ Exhaust air outlet with a sound absorber
⑧ Connecting terminals
⑨ Grounding, thread M4
⑩ Lower cable gland, thread M20x1.5
⑪ Upper cable gland, thread M20x1.5

Figure 2-1 Positioner, enclosure with open lid

### See also

Structure of pneumatic connection (Page 20)

# Installing and mounting 3

**⚠ WARNING**

**High operating force with pneumatic actuators**

Risk of injury when working on control valves due to the high operating force of the pneumatic actuator.

- Please observe the corresponding safety instructions for the pneumatic actuator in use.

**⚠ CAUTION**

**Adhere to the following instructions before working on the control valve and when attaching the positioner**

Danger of injury.

- Prior to working on the control valve, you must move the actuator and the process valve into a completely pressureless state. Proceed as follows:
  - Depressurize the actuator chambers.
  - Switch off the supply pressure PZ.
  - Secure the process valve.
- Make sure that the actuator has reached the pressureless state.
- If you interrupt the supply pressure PZ to the positioner, the pressureless position can only be reached after a certain waiting time.
- When mounting, adhere strictly to the following order to avoid injuries or mechanical damage to the positioner/mounting kit:
  - Mount the positioner mechanically.
  - Electric connection.
  - Connect supply pressure PZ.
  - Commission the positioner.

## 3.1 Freezing of the exhaust air outlets

**NOTICE**

**Freezing of the exhaust air outlets**

The exhaust air outlets ② can ice up. The function of the device is impaired.

- Do **not** install the positioner with the base plate ① pointing up.

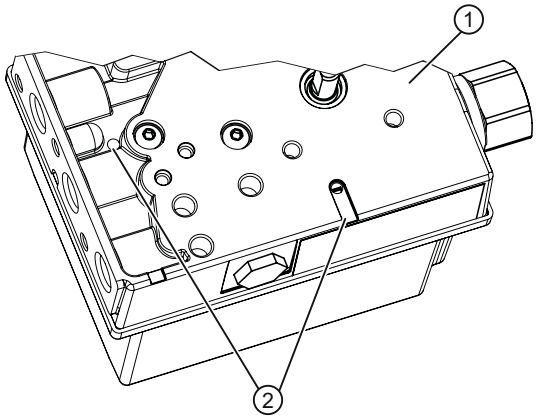


① Base plate
② Exhaust air outlets

Figure 3-1 Exhaust air outlets, base plate

## 3.2 Mounting to linear actuator

### Requirements

Depending on the stroke height, you will need the following mounting kit:

- 3 to 35 mm mounting kit 6DR4004-8V
- 35 to 130 mm mounting kit 6DR4004-8V and additional 6DR4004-8L

### Parts list 6DR4004-8L

| Serial no. | Quanti-ty | Name | Note |
|---|---|---|---|
| ① | 1 | Lever | For the range of stroke from 10 to 130 mm |

### Parts list 6DR4004-8V

The numbers in "serial no." column refer to the images in the description of the procedure.

| Serial no. | Quanti-ty | Name | Note |
|---|---|---|---|
| ① | 1 | NAMUR mounting bracket IEC 60534 | Standardized connection point for mount with fin, column or plane surface |
| ② | 1 | Pick-up bracket | Guides the pulley with the carrier pin and rotates the lever arm. |
| ③ | 2 | Clamping piece | Installs the pick-up bracket on the actuator spindle |
| ④ | 1 | Carrier pin | Installation with pulley ⑤ on lever ⑥ |
| ⑤ | 1 | Pulley | Installation with carrier pin ④ on lever ⑥ |
| ⑥ | 1 | Lever | For the range of stroke from 3 to 35 mm |
| ⑦ | 2 | U–bolts | Only for actuators with columns |

| Serial no. | Quanti-ty | Name | Note |
|---|---|---|---|
| ⑧ | 4 | Hexagon bolt | M8x20 DIN 933–A2 |
| ⑨ | 2 | Hexagon bolt | M8x16 DIN 933-A2, torque, section "Technical specifications > Mechanical construction (Page 41)" |
| ⑩ | 6 | Spring lock washer | A8 - DIN 127–A2 |
| ⑪ | 6 | Washer | B8.4 - DIN 125–A2 |
| ⑫ | 2 | Washer | B6.4 - DIN 125–A2 |
| ⑬ | 1 | Spring | VD-115E 0.70 x 11.3 x 32.7 x 3.5 |
| ⑭ | 1 | Spring lock washer | A6 - DIN 137A–A2 |
| ⑮ | 1 | Lock washer | 3.2 - DIN 6799–A2 |
| ⑯ | 3 | Spring lock washer | A6 - DIN 127–A2 |
| ⑰ | 3 | Socket cap screw | M6x25 DIN 7984–A2 |
| ⑱ | 1 | Hexagon nut | M6 - DIN 934–A4 |
| ⑲ | 1 | Square nut | M6 - DIN 557–A4 |
| ⑳ | 4 | Hexagon nut | M8 - DIN 934–A4 |

## Procedure

1. Install the clamping pieces ③ on the actuator spindle. Use spring lock washers ⑯ and socket cap screws ⑰ for this purpose.
2. Slide the pick-up bracket ② into the milled recesses of the clamping pieces ③.

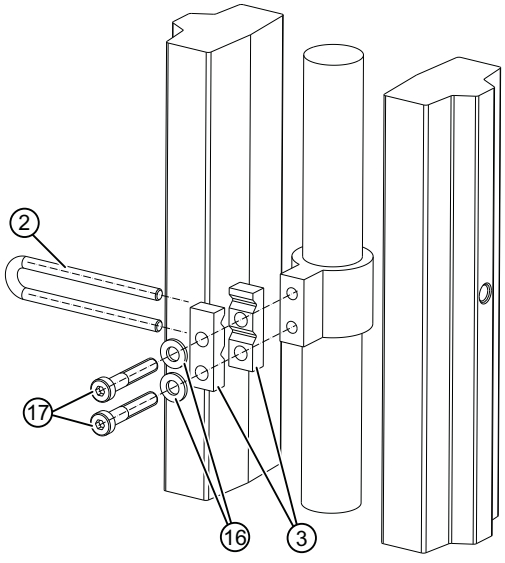


Figure 3-2 Pick-up bracket

3. Tighten the screws ⑰ so that you can still shift the pick-up bracket ②.

4. If you use a short lever, the carrier pin is already pre-mounted. If you use the long lever 6DR4004-8L, fasten the carrier pin ④ with the existing parts to the long lever.

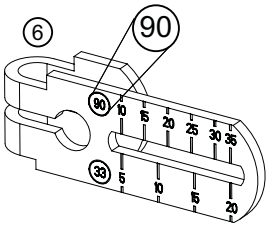


Figure 3-3 Short lever

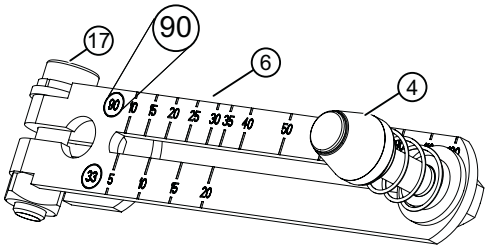


Figure 3-4 Long lever 6DR4004-8L with mounted carrier pin ④ and cylinder head screw ⑰

5. Position the carrier pin on the stroke value of the upper scale (90) of the lever ⑥. For strokes greater than 35 mm, use the long lever, article number 6DR4004-8L.
6. Push the pre-installed lever ⑥ up to the endstop on the positioner shaft. Fasten the lever ⑥ with socket cap screw ⑰.
7. Install the mounting bracket ① at the rear side of the positioner. Use 2 hexagon bolts ⑨, 2 spring lock washers ⑩ and 2 flat washers ⑪ for this purpose.

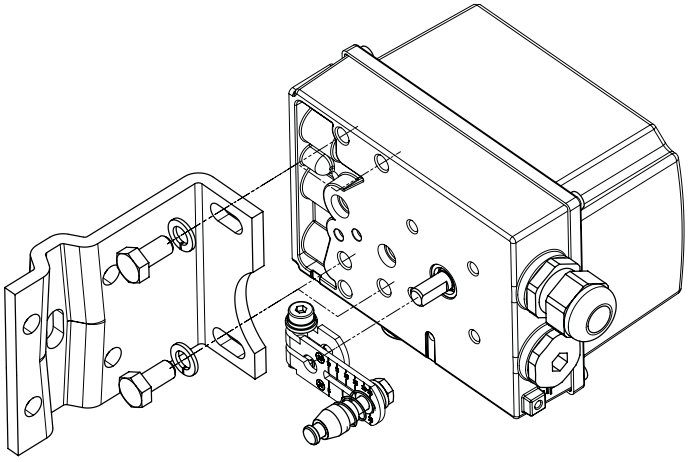

Figure 3-5 Installation with mounting bracket

8. Select the row of holes. The selection of the row of holes depends on the yoke width of the actuator. Select the row of holes in such a way that the carrier pin ④ meshes with the pick-up bracket ② near the spindle. Ensure that the pick-up bracket ② does not touch the clamping pieces ③.

9. Keep the positioner and the fastening bracket on the actuator. Ensure that the carrier pin ④ is guided inside the pick-up bracket ②.
10. Fasten the positioner on the yoke.

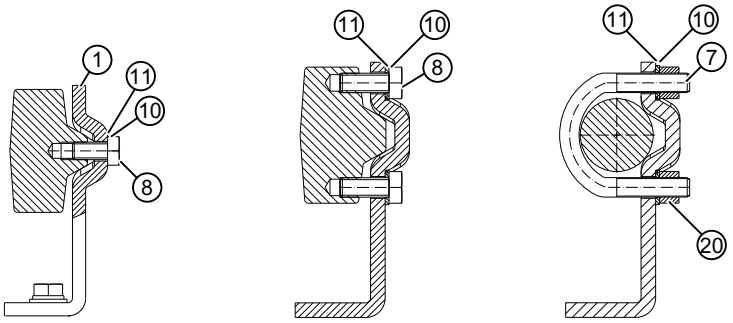


Figure 3-6 Fastening to various yoke types

## 3.3 Mounting to part-turn actuator

### Requirements

- An actuator-specific VDI/VDE 3845 mounting console
- Mounting kit 6DR4004-8D

### Procedure

| "Part-turn actuator" mounting kit 6DR4004–8D | | | |
|---|---|---|---|
| **Sr. no. *)** | **Quantity** | **Name** | **Note** |
| ① | 1 | Coupling wheel | Installation on positioner shaft |
| ② | 1 | Carrier | Installing on the actuator shaft |
| ③ | 1 | Multiple plate | Display of the position, consisting of scale and pointer mark |
| | 8 | Scale | Different divisions |
| | 2 | Pointer mark | Reference point for scale |
| ④ | | Mount | Actuator-specific, VDI/VDE 3845 |
| ⑤ | 4 | Hexagon bolt | M6x12 DIN 933, torque see the section "Technical specifications > Mechanical construction (Page 41)" |
| ⑥ | 4 | Lock washer | S6 |
| ⑦ | 1 | Socket cap screw | M6x16 DIN 84 |
| ⑧ | 1 | Washer | 6.4 DIN 125 |
| ⑨ | 1 | Hex socket-head screw | M4 for coupling wheel |
| ⑩ | 1 | Square nut | M4 for coupling wheel |
| | 1 | Machinist's wrench | For hexagon socket-head screw ⑨ |

*) The numbers refer to the images of the description of the installation steps below.

1. Rest the actuator-specific VDI/VDE 3845 mount ④ on the rear side of the positioner.
2. Tighten the mount using the hexagon bolts ⑤ and lock washers ⑥.

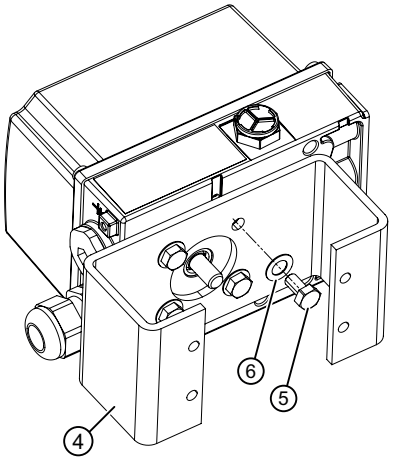


Figure 3-7 Mount

3. Insert the square nut ⑩ into the coupling wheel. Insert the hex socket head screw ⑨ into the square nut ⑩.

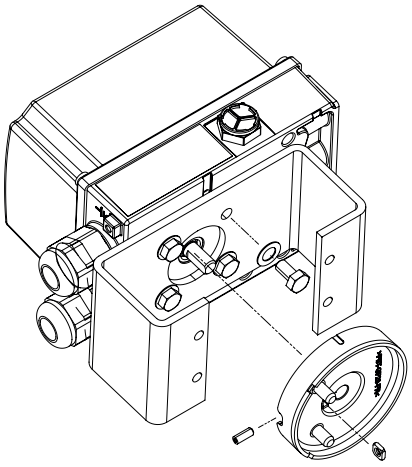

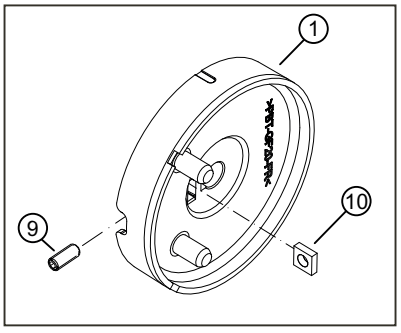


Figure 3-8 Coupling wheel

4. Push the coupling wheel ① or the stainless steel coupling up to the endstop on the positioner shaft.
5. Move the coupling wheel or the stainless steel coupling back by approximately 1 mm.
6. Tighten the hexagon socket-head screw ⑨ using the machinist's wrench provided. Maximum tightening torque = 1 Nm. If you are using the stainless steel coupling, omit the next step.

**Note**

**Coupling wheel**

Instead of the polycarbonate coupling wheel ①, it is possible to use a stainless steel coupling (article number TGX: 16300-1556).

7. Place the carrier ② on the actuator shaft.

8. Tighten the carrier ② using the cylinder head screw ⑦ and the washer ⑧.

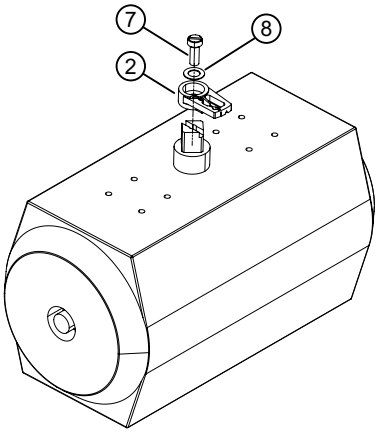


Figure 3-9 Carrier

9. Place the positioner and the mount on the actuator carefully. One of the two pins ⑫ of the coupling wheel ① must fit in the carrier ② when you do this.

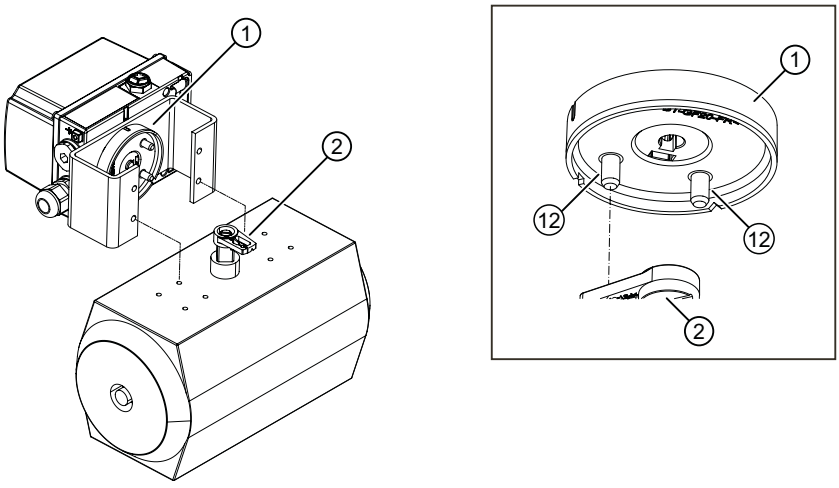


Figure 3-10 Orientation of mount

When using the stainless steel coupling (article number TGX: 16300-1556): Place the positioner and the mount on the actuator carefully. Place the stainless steel coupling on the actuator shaft.

10. Align the positioner/mount at the center of the actuator.
11. Tighten the positioner/mount unit.

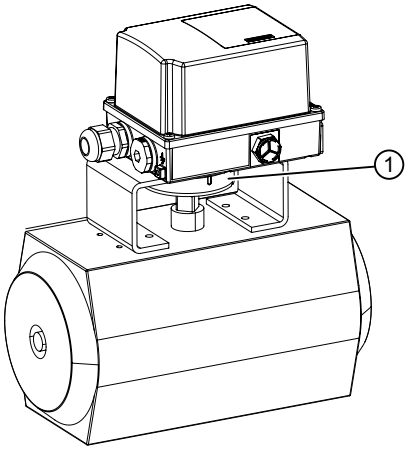


Figure 3-11 Positioner with mount attached to the part-turn actuator

# Connecting

# 4

**⚠ WARNING**

**Lever for position detection**

Danger of crushing and shearing with mounting kits which use a lever for position detection. During commissioning and ongoing operation, severing or squeezing of limbs could occur as a result of the lever. Risk of injury when working on control valves due to the high operating force of the pneumatic actuator.

- Do not reach into the range of motion of the lever following mounting of the positioner and mounting kit.

### Two-wire mode

**NOTICE**

**Connection of voltage source to current input**

Device damage if a voltage source is connected to the current input $I_w$ (terminals 6 and 7).

- Never connect the current input $I_w$ to a low-resistance voltage source, otherwise the positioner may be destroyed.
- Always use a high-impedance power source.
- Observe the static destruction limit specified in the "Input (Page 39)".

## 4.1 Grounding

The positioner is grounded via the mounting kit or via grounding with thread M4 on the enclosure, ⑨ in Overview of device components (Page 9).

## 4.2 Electrical connection

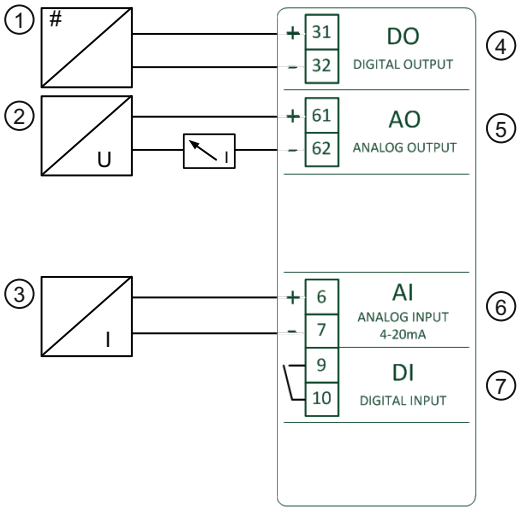


① Digital input or switching amplifier
② Power source 12 to 30 V DC
③ Signal source 4 to 20 mA
④ Digital output
⑤ Analog output of position feedback
⑥ Analog input current input 4 to 20 mA
⑦ Digital input (floating contact)

Figure 4-1 Wiring diagram

## 4.3 Pneumatic connection

### 4.3.1 Structure of pneumatic connection

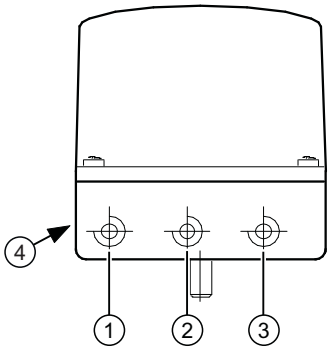


① Output: Actuating pressure Y2 *)
② Input: Supply pressure PZ
③ Output: Actuating pressure Y1
④ Exhaust air outlet with sound absorber, thread G¼

*) for double-acting actuators

Figure 4-2 Pneumatic connection, example

### See also

Overview of device components (Page 9)

## 4.3.2 Pneumatic connection

**⚠ WARNING**

**Supply pressure PZ**

For safety reasons, the supply pressure PZ can be fed after installation only if the positioner is switched to the "NO INIT" mode when an electrical signal is available.

**Note**

**Specifications regarding air quality**

Observe the specifications regarding the air quality, see section "Technical specifications > Pneumatic data (Page 40)".

**Note**

**Leakage**

Besides continuous air consumption, a leakage can cause the positioner to try to compensate the position deviation. This will result in premature wear in the entire control device.

- Check if there is leakage with "LEAKAGE TEST".
- If there is leakage, check the pneumatic connections for leaks.

## 4.3.3 Behavior in case of failure of the electrical auxiliary power and/or the supply pressure PZ

### Overview

**⚠ CAUTION**

**Note the following before working on the control valve**

Note that, before working on the control valve, you must first move it to the safety position. Make sure that the process valve has reached the safety position. If you only interrupt the supply pressure PZ to the positioner, the safety position can in some cases only be attained after a certain delay period.

The difference between a failure of supply pressure PZ and a failure of electrical auxiliary power:

- Failure of **electrical auxiliary power** means the failure of the signal source at the analog input 4 to 20 mA.
- Failure of the **supply pressure PZ**

| **Actuator type** | **Behavior in case of failure: The actuator moves into safety position** | |
|---|---|---|
| | **Failure of electrical auxiliary power** | **Failure of supply pressure PZ** |
| Single-acting | Y1 = vented | Y1 = vented |
| Double-acting | Y1 = pressurized<br>Y2 = vented | Y1 = closed<br>Y2 = closed |

# Local operation

5

### Navigating in "NO INIT" operating mode

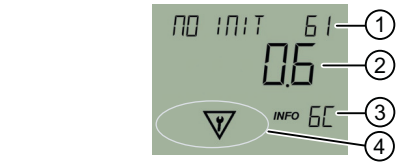


Initializing



Configuring

Valve
open / close

① Status line: Operating mode and setpoint in percent
② Main line: Angle of position detection in degrees
③ Info (Page 34)
④ Symbols for device status (Page 33)

### Navigating in "AUTO" and "MANUAL" operating mode

AUTO

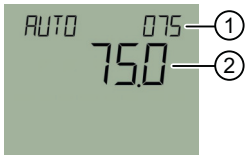


MANUAL



Configuring

No
function

MANUAL

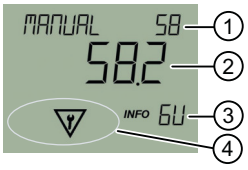


AUTO



Configuring

Valve
open / close

① Status line: Operating mode and setpoint in percent
② Main line: Valve position as a percentage
③ Info (Page 34)
④ Symbols for device status (Page 33)

### Navigating in parameter view and edit view

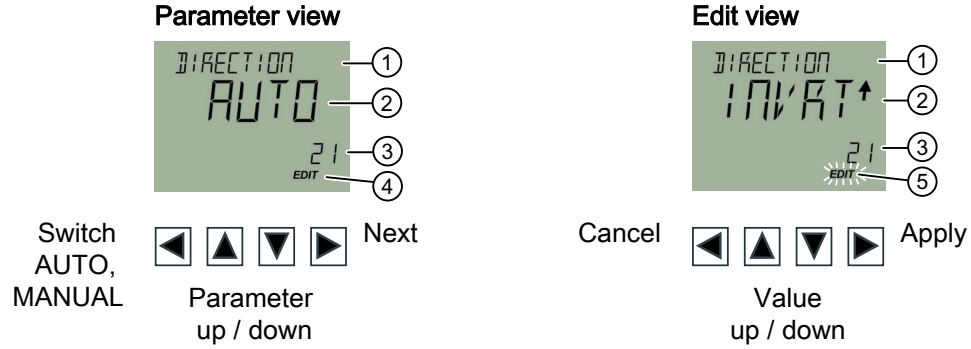


① Status line: Name or unit of the parameter
② Main line: Parameter value
③ Parameter ID
④ EDIT permanently activated
⑤ EDIT flashes

# Commissioning

# 6

**⚠ WARNING**

**Risk of crushing through lever of position detection**

When the positioner is commissioned, immediate movement of the valve may occur.

If the positioner is in "NO INIT" mode, the movement of the valve starts immediately as soon as you press the left button on the positioner.

Danger of crushing and shearing with mounting kits which use a lever for position detection. During commissioning and during ongoing operation, severing or squeezing of limbs could occur as a result of the lever. Risk of injury when working on control valves due to the high operating force of the pneumatic actuator.

- Do not reach into the range of motion of the lever following mounting of the positioner and mounting kit.

## 6.1 Initialize in "NO INIT" operating mode

If "NO INIT" appears in the display this means that the device is not initialized, Info ID (Page 34) [6C]. Commission the device by initializing it with "NO INIT".

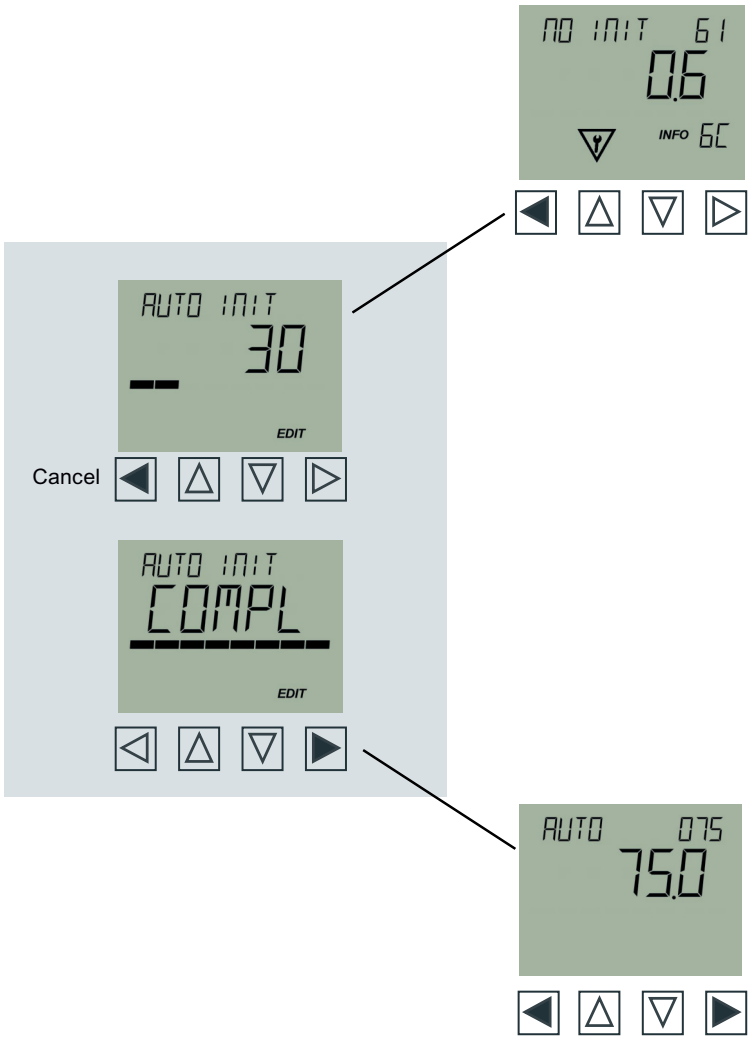

# Parameter assignment and addressing

# 7

## 7.1 Overview of the menu structure

**Note**

**Parameter ID in the local display**

The overview of the menu structure contains not only the menus and parameters but also the parameter IDs. These parameter IDs are added to the further explanations of the menus and parameters in [ ]. Example "AUTO INIT" [01]




| QUICK START [01] | |
|---|---|
| AUTO INIT | 01 |
| MANUAL INIT | 02 |
| LEAKAGE TEST | 03 |
| SPEED TEST | 04 |
| OVERSHOOT | 05 |
| VALVE TYPE | 06 |
| APPLICATION | 07 |

1)




| SETUP [02] | |
|---|---|
| DIGITAL IN | 01 |
| DIGITAL OUT | 02 |
| DIRECTION | 03 |
| CLOSE TYPE | 04 |
| CLOSE LIMIT | 05 |
| OPEN TYPE | 06 |
| OPEN LIMIT | 07 |
| DBAND LIMIT | 08 |
| DBAND VALUE | 09 |
| LEAKAGE COMP | 10 |
| MOUNTING | 11 |

2) 2)




| MAINT/DIAGS [03] | |
|---|---|
| SETPOINT | 01 |
| COUNTER | 02 |
| PEAK VALUES | 03 |
| RESET | 04 |
| FW VERSION | 05 |
| HW VERSION | 06 |
| REPLACE ELEC | 07 |

[1] Visible if valve types have been stored at the factory.

[2] Visible with installed device option 1 with digital input (DI) and digital output (DQ).

# 7.2 QUICK START [01]

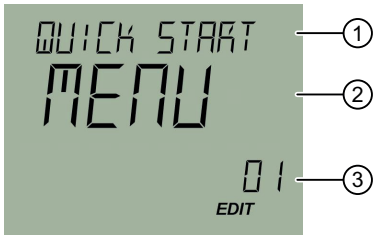


| | ③ | ① | ② | Meaning |
|---|---|---|---|---|
| | 01 | AUTO INIT | WIZ | Enables automatic initialization of the valve. The end positions are determined automatically. |
| | 02 | MANUAL INIT | WIZ | Provides a step-by-step procedure for manual initialization of the valve. Define the end positions manually. |
| | 03 | LEAKAGE TEST | WIZ | Enables the determination of the pneumatic leakage. The result is a stroke movement as a %/minute caused by leakage. |
| | 04 | SPEED TEST | WIZ | Velocity test<br>Enables the determination of travel times in seconds. |
| | 05 | OVERSHOOT | WIZ | Enables the determination of an overshoot as a % in relation to the total stroke. An overshoot of less than 3 % is displayed as "Ok". |
| 1) | 06 | VALVE TYPE | WIZ | Sets the valve type. If "NONE" is displayed, no valve type is selected. When a valve type is selected, the positioner is adapted to this valve type. |
| 2) | 07 | APPLICATION | | Selection of the application profile |
| | | | AUTO | Enables the default, suitable for all applications. |
| | | | TIGHT | Enables control of the valve. The valve moves to the end positions with maximum actuating force (close tight). |
| | | | FAST | Enables dynamic control of the valve, optimized to a fast control response. |
| | | | EXACT | Enables precise control of the valve. |
| | | | ONOFF | Enables an open/closed behavior of the valve. The valve moves to the end positions with maximum actuating force (close tight). |
| | | | BOOST | Enables control of the valve with pneumatic booster. |
| | | | SMALL | Enables control of a small valve with damped control response. |

WIZ = wizard

1) visible if valve types have been stored at the factory.

2) not visible if a valve type was selected for "VALVE TYPE" [06].

## 7.3 SETUP [02]

Setting the device parameters.

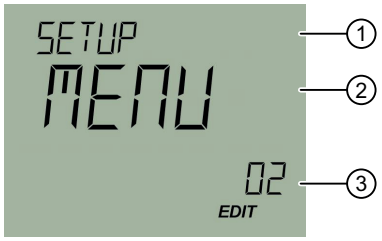


Factory-set parameter values are printed in bold in the table.

| | ③ | | ① | ② | **Meaning** |
|---|---|---|---|---|---|
| | 01 | | DIGITAL IN | | Digital input (DI) |
| | | | | MENU | Menu for setting the digital input (DI) |
| | | 01 | • BEHAVIOR DI | | Behavior at digital input |
| | | | | **NONE** | Sets the digital input to inactive. |
| | | | | HOLD | Sets the digital input to keep the valve position. |
| | | | | BUTTN | Sets the digital input to button lock. |
| | | | | MSG | Enables the digital input. |
| | | | | GO CL | Moves to the valve position when digital input is activated, as set in parameter "CLOSE LIMIT" [05]. |
| | | | | GO OL | Moves to the valve position when digital input is activated, as set in parameter "OPEN LIMIT" [07]. |
| | | 02 | • POLARITY DI | | Polarity of the digital input |
| | | | | **HIGH** | Normally Open: Normally open contact |
| | | | | LOW | Normally Close: Normally closed contact |
| | 02 | | DIGITAL OUT | | Digital output (DO) |
| | | | | MENU | Menu for setting the digital output (DO) |
| | | 01 | • BEHAVIOR DO | | Behavior at digital output |
| | | | | NONE | Sets the digital output to inactive. |
| | | | | ERR | Enables the digital output in case of control deviation or device fault. |
| | | | | **ERR M** | Enables the digital output in case of manual operation, control deviation or device fault. |
| | | | | POS | Enables the digital output when the value of the "DO POS LIMIT" [03] parameter is reached. |
| | | 02 | • POLARITY DO | | Polarity of the digital output |
| | | | | **HIGH** | Normally Open: Normally open contact |
| | | | | LOW | Normally Close: Normally closed contact |
| | | 03 | • DO POS LIMIT | 0.0 ... **10.0** ... 100.0 | Specifies the value as a percentage at which the digital output is enabled. Values < 50 correspond to a **low** limit value. Values ≥ 50 correspond to a **high** limit value. |
| | 03 | | DIRECTION | **AUTO** | Sets the operating direction of the valve defined during initialization. |
| | | | | INVRT | Inverts the operating direction of the valve defined during initialization. |

| | ③ | ① | ② | Meaning |
|---|---|---|---|---|
| *) | 04 | CLOSE TYPE | **FAST** | Sets the valve to a fast response at the end position. |
| | | | TIGHT | Sets the valve to behavior with maximum actuating force at the end position. |
| | | | SLOW | Sets the valve to precise behavior at the end position. |
| | | | LIMIT | Limits the control range to the value set in the parameter "CLOSE LIMIT" [05]. |
| *) | 05 | CLOSE LIMIT | **0.0** ... 100.0 | Sets the value as a % as of which the valve closes. |
| *) | 06 | OPEN TYPE | **FAST** | Sets the valve to a fast response at the end position. |
| | | | TIGHT | Sets the valve to behavior with maximum actuating force at the end position. |
| | | | SLOW | Sets the valve to precise behavior at the end position. |
| | | | LIMIT | Limits the control range to the value set in the parameter "OPEN LIMIT" [07]. |
| *) | 07 | OPEN LIMIT | 0.0 ... **100.0** | Sets the value as a % as of which the valve opens. |
| *) | 08 | DBAND LIMIT | 0.1 ... 3.0 | Sets the maximum range of the deadband as %. |
| *) | 09 | DBAND VALUE | x.x | Displays the current value of the deadband. |
| | 10 | LEAKAGE COMP | **ON** | Enables the leakage compensation. |
| | | | OFF | Disables the leakage compensation. The function is reset by disabling. |
| | 11 | MOUNTING | **AUTO** | Sets the positioner to mounting on standard actuator. |
| | | | LEVER | Sets the positioner to mounting on linear actuator, carrier pin mounted on lever. |
| | | | STEM | Sets the positioner to mounting to linear actuator, carrier pin mounted on spindle. |
| | | | TURN | Sets the positioner to mounting to part-turn actuator. |

*) visible when "AUTO" is selected in "QUICK START [01] > APPLICATION [07]".

# 7.4 MAINT/DIAGS [03]

Service menu

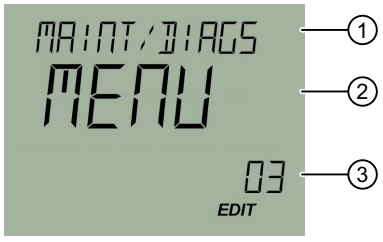

| ③ | | ① | ② | Meaning |
|---|---|---|---|---|
| 01 | | SETPOINT | ##.## | Displays the setpoint in mA. Status bar ① alternately displays the parameter name or the set unit. |
| 02 | | COUNTER | MENU | |
| | 01 | • OPERATE TIME | #### | Displays the number of operating hours. |
| | 02 | • DIRECTN CHNG | #### | Displays the number of direction changes. |
| | 03 | • STROKES | #### | Displays the totalized distances. A distance corresponds to a sum of 200 %. |
| | 04 | • PILOT 1 | #### | Displays the number of switching cycles of pilot valve 1. |
| | 05 | • PILOT 2 | #### | Displays the number of switching cycles of pilot valve 2. |
| 03 | | PEAK VALUES | MENU | |
| | 01 | • TIME OPEN | ##.# | Displays the duration in seconds until the valve is open. |
| | 02 | • TIME CLOSE | ##.# | Displays the duration in seconds until the valve is closed. |
| | 03 | • ELEC TMP MIN | ##.## | Displays the lowest measured electronics temperature in °C. |
| | 04 | • ELEC TMP MAX | ##.## | Displays the highest measured electronics temperature in °C. |
| 04 | | RESET | FACT | Resets the device to the factory settings. |
| 05 | | FW VERSION | ##### | Displays the FW version of the device. |
| 06 | | HW VERSION | ##### | Displays the HW version of the device. |
| 07 | | REPLACE ELEC | WIZ | Provides a step-by-step procedure to synchronize new electronics. PIN LOCK is 2457. |

# Troubleshooting

# 8

## 8.1 Device status symbols

The device status is displayed on the display with the help of symbols. Alarms are displayed on the display in the measurement view as symbol in the bottom line of the display. If multiple diagnostic states are pending at the same time, the symbol for the most critical status is displayed. The table below shows the possible causes for the device status and measures for the user or service. The order of the symbols in the table corresponds to the priority of the device status, starting with the most critical message.

| Display symbols - NAMUR NE 107 | | | Meaning |
|---|---|---|---|
| Symbol | Device status | Priority * | Priority * |
|  | Failure | 1 | **Cause:** Output signal invalid due to fault in the field device or in the peripherals.<br>**Measure:** Maintenance is required immediately. |
|  | Function test | 2 | **Cause:** Output signal temporarily invalid (e.g. frozen) due to work being performed on the device.<br>**Measure:** Manual mode over HMI or disable the engineering system. |
|  | Out of specification | 3 | **Cause:** Deviations from permissible ambient or process conditions detected by the device (by means of self-monitoring or based on warnings/errors in the device) indicate that the measured value is unreliable or that deviations from the set value in the actuators are most likely greater than anticipated under normal operating conditions.<br>Process or ambient conditions can damage the device or result in unreliable results. |
|  | Maintenance required | 4 | **Cause:** The output signal is still valid but the wear reserve is coming to an end and/or functional restrictions will occur soon.<br>**Measure:**Maintenance is recommend as soon as possible. |

* The smallest number indicates the highest level of error severity.

## 8.2 Info IDs, error messages and corrective measures

The following table shows the IDs of diagnostic messages and possible causes and instructions for corrective actions.

| Messages on the local display (Page 23) | | | Meaning / cause | Remedy |
|---|---|---|---|---|
| ID | Symbol | Status line | | |
| 6A |  | NO MOVEMENT | • Initialization errors<br>• Insufficient supply of compressed air<br>• Mounting kit not correctly mounted<br>• Valve blocked | Eliminate the cause. Start the initialization process. |
| 6C |  | NO INIT + set-point as percentage | Positioner is not initialized | Start the initialization with ◀. |
| 6d |  | - | • Measuring range of position detection exceeded<br>• Swivel area of the valve is larger than 110°<br>• Positioner installed on a different actuator without re-initialization.<br>• End positions of valve are worn | Check the mounting kit and the wear. Start the initialization process. |
| 6E |  | DI-HOLD + set-point as percentage | Maintain valve position is enabled through digital input (DI). | Configured response. If required, adjust setting in parameter "DIGITAL IN" [01] |
| 6F |  | DI-GO CL + set-point as percentage | Approach valve position is enabled through digital input (DI). | Configured response. If required, adjust the setting in the parameter "CLOSE LIMIT" [05]. |
| 6H |  | DI-GO OL + set-point as percentage | Approach valve position is enabled through digital input (DI). | Configured response. If required, adjust setting in parameter "OPEN LIMIT" [07]. |
| 6L | - | - | Digital input (DI) is enabled. This status is reported via the digital output (DO).<br>Setting in parameter "BEHAVIOR DI [01] > MSG" | Not necessary. |
| 6N |  | SPAN TO HIGH | • Maximum angle span exceeded<br>• Effective lever arm is not adjusted to the actuator travel<br>• Mounting kit not correctly mounted | Position the carrier pin at a larger stroke value.<br>Check the mounting kit.<br>Use the electropneumatic positioner SIPART PS2 from Siemens with a swivel area of 185° (special design). |
| 6P |  | SPAN TO LOW | • Value below minimum angle span<br>• Effective lever arm is not adjusted to the actuator travel<br>• Mounting kit not correctly mounted | Position the carrier pin at a smaller stroke value.<br>Check the mounting kit. |

| Messages on the local display (Page 23) | | | Meaning / cause | Remedy |
|---|---|---|---|---|
| ID | Symbol | Status line | | |
| 6r |  | - | A pneumatic leakage is present | Remedy the pneumatic leak of the actuator and the piping. |
| 6t |  | - | • Control deviation<br>• Insufficient supply of compressed air<br>• Mounting kit not correctly mounted<br>• Valve blocked | Eliminate the cause. |
| 6U |  | MANUAL | Device in manual mode | Switch with ◀ to "AUTO" operation mode. |
| L |  | - | Button lock is enabled.<br>Digital input (DI) is enabled.<br>Setting in parameter "BEHAVIOR DI [01] > BUTTN" | Switch the digital input (DI). |
| LP |  | - | Parameters and device functions are write-protected with a user PIN. | Disable the write protection with user PIN LOCK 2457. |

# Service and maintenance

# 9

**WARNING**

**Impermissible repair of the device**

- Repair must be carried out by Siemens authorized personnel only.

**NOTICE**

**Penetration of moisture into the device**

Device damage

- Make sure when carrying out cleaning and maintenance work that no moisture penetrates the inside of the device.

### Cleaning the enclosure

- Clean the outside of the enclosure with the inscriptions and the display window using a cloth moistened with water or a mild detergent.
- Do not use any aggressive cleansing agents or solvents, e.g. acetone. Plastic parts or the painted surface could be damaged. The inscriptions could become unreadable.

## 9.1 Return procedure

Enclose the bill of lading, return document and decontamination certificate in a clear plastic pouch and attach it firmly to the outside of the packaging.

### Required forms

- Delivery note
- Return document (http://www.siemens.com/processinstrumentation/returngoodsnote) with the following information:
  - Product (item description)
  - Number of returned devices/replacement parts
  - Reason for returning the item(s)
- Decontamination declaration (http://www.siemens.com/sc/declarationofdecontamination) With this declaration you warrant "that the device/replacement part has been carefully cleaned and is free of residues. The device/replacement part does not pose a hazard for humans and the environment."
  If the returned device/replacement part has come into contact with poisonous, corrosive, flammable or water-contaminating substances, you must thoroughly clean and decontaminate the device/replacement part before returning it in order to ensure that all hollow areas are free from hazardous substances. Check the item after it has been cleaned. Any devices/replacement parts returned without a decontamination declaration will be cleaned at your expense before further processing.

## 9.2 Disposal

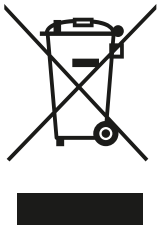

Devices described in this manual should be recycled. They may not be disposed of in the municipal waste disposal services according to the Directive 2012/19/EC on waste electronic and electrical equipment (WEEE).

Devices can be returned to the supplier within the EC, or to a locally approved disposal service for eco-friendly recycling. Observe the specific regulations valid in your country.

Further information about devices containing batteries can be found at: Information on battery/product return (WEEE) (https://support.industry.siemens.com/cs/document/109479891/)

# Technical specifications

# 10

## 10.1 Input

| Analog input (AI), terminal 6 and 7 | |
|---|---|
| Nominal signal range | 4 ... 20 mA |
| Minimum current to maintain the operation | 3.8 mA |
| Maximum load voltage | 6.5 V corresponds to 325 Ω at 20 mA |
| Static destruction limit | ± 40 mA |

| Digital input (DI), terminals 9 and 10 | |
|---|---|
| Galvanic isolation | Galvanically connected to analog input<br>Galvanically isolated from the outputs |
| Signal status 0, floating contact open | > 300 kΩ |
| Signal status 1, floating contact closed | < 3 kΩ |
| Contact load | Can only be used for floating contact;<br>Max. contact load < 20 µA, 3 V |

## 10.2 Output

| Analog output (AQ), terminals 61 and 62 | |
|---|---|
| Wiring configuration | 2-wire connection |
| Nominal signal range | 4 ... 20 mA |
| Fault current | < 3.6 mA |
| Supply voltage $U_H$ | 12 ... 30 V |
| External load $R_B$[kΩ] | ≤ ($U_H$ [V] - 12 V)/$I_O$ [mA] |
| Resolution in relation to the nominal signal range | 0.05% |
| Transmission error in relation to the nominal signal range | ± 0.3% |
| Effect of ambient temperature | ± 0.1%/10 C |
| Maximum residual ripple | ± 0.5% |
| Galvanic isolation | Galvanically isolated from the other electrical inputs and outputs |

| Digital output (DQ), terminals 31 and 32 | |
|---|---|
| Maximum supply voltage $U_H$ | 35 V |
| "Conductive" state | • Permissible rated current 50 mA<br>• Maximum terminal voltage 3 V<br>• Overload-proof |
| "Locked" state<br>"Locked" is also the status if the device is faulty or analog input (AI) is = 0 mA. | I < 60 µA |

## 10.3 Rated conditions

| Rated conditions | |
|---|---|
| Ambient conditions for operation according to IEC 60068-2 | For use indoors and outdoors. |
| • Ambient temperature | -20 ... +80 °C (-4 ... +176 °F) |
| • Relative humidity | 0 ... 100% |
| Pollution degree according to IEC 61010-1 | 2 |
| Overvoltage category according to IEC 61010-1 | II |
| Enclosure degree of protection | |
| • In accordance with IEC 60529 | IP66 |
| • According to UL 50E | Type 4X |
| Vibration resistance | |
| • Harmonic oscillations (sine) according to IEC 60068-2-6 | 3.5 mm (0.14"), 2 ... 27 Hz, 3 cycles/axle |
| | 98.1 m/s² (321.84 ft/s²), 27 ... 300 Hz, 3 cycles/axle |
| • Bump (half-sine) according to IEC 60068-2-27 | 150 m/s² (492 ft/s²), 6 ms, 1000 shocks/axle |
| • Noise (controlled digitally) according to IEC 60068-2-64 | 10 ... 200 Hz; 1 (m/s²)²/Hz (3.28 (ft/s²)²/Hz) |
| | 200 ... 500 Hz; 0.3 (m/s²)²/Hz (0.98 (ft/s²)²/Hz) |
| | 4 hours/axle |

## 10.4 Pneumatic data

| Pneumatic data | |
|---|---|
| Pneumatic operating medium | Compressed air, carbon dioxide ($CO_2$), nitrogen ($N_2$), noble gases |
| • Operating pressure | 1.4 ... 7 bar (20.3 ... 101.5 psi) |
| Quality class compressed air according to ISO 8573-1 | |
| • Solid impurities | Class 3 |
| • Pressure dew point | Min. 20 C (36 °F) below ambient temperature |

| **Pneumatic data** | |
|---|---|
| • Oil content | Class 3 |
| Flow rate | |
| • Aerate process drive | |
| Supply pressure 4 bar (58 psi) | 7.1 m³/h (31.3 USgpm) |
| Supply pressure 6 bar (87 psi) | 9.8 m³/h (43.1 USgpm) |
| • Depressurize process drive | |
| Actuating pressure 4 bar (58 psi) | 13.7 m³/h (60.3 USgpm) |
| Actuating pressure 6 bar (87 psi) | 19.2 m³/h (84.5 USgpm) |
| Leakage actuator chamber (positioner portion) | < $6 \cdot 10^{-4}$ m³/h (0.0026 USgpm) |
| Consumption at operating medium in the controlled state | < $3.6 \cdot 10^{-2}$ m³/h (0.158 USgpm) |
| Sound pressure level | $L_{A\,eq}$ < 75 dB<br>$L_{A\,max}$ < 80 dB |

## 10.5 Mechanical construction

| **Mechanical construction** | |
|---|---|
| Supported actuator types | |
| • Linear actuator, range of stroke | 10 to 130 mm (0.39 to 5.12") |
| • Part-turn actuator, angle-of-rotation range | 10 to 100° |
| Weight, positioner without accessories | Approx. 1.0 kg (2.20 lb) |
| Material | |
| • Lid | • Aluminum<br>• Polycarbonate |
| • Base plate | Aluminum |
| Torques | |
| • Lid fixing screws | 1.5 Nm (1.1 ft lb) |
| • Part-turn actuator fixing screws DIN 933 M6x12-A2 | 5 Nm (3.7 ft lb) |
| • Linear actuator fixing screws DIN 933 M8x16-A2 | 12 Nm (8.9 ft lb) |
| • Gland pneumatic G¼ | 15 Nm (11.1 ft lb) |
| • Pneumatic gland 1/4-18 NPT | |
| Without sealant | 12 Nm (8.9 ft lb) |
| With sealant | 6 Nm (4.4 ft lb) |
| • M20 cable gland, plastic | 4 Nm (3 ft lb) |
| • M20 cable gland, metal | 6 Nm (4.4 ft lb) |
| • Cable gland 1/2-14 NPT metal | 15 Nm (11.1 ft lb) |
| • Cable gland for NPT bushing in the NPT adapter<br>NOTE: To avoid damage to the device, the NPT adapter must be held in place while the NPT gland is screwed into the NPT adapter. | 68 Nm (50 ft lb) |

| Mechanical construction | |
|---|---|
| • Screw cap made of plastic | 2.5 Nm (1.8 ft lb) |
| • Screw cap made of metal | 4 Nm (3 ft lb) |
| • Pressure gauge block fixing screws | 6 Nm (4.4 ft lb) |
| Pressure gauge | |
| • Material pressure gauge | Plastic, Mechanics brass |
| | Stainless steel, Mechanics brass nickel-plated |
| | Stainless steel, Mechanics stainless steel 316 |
| • Material pressure gauge block | Anodised aluminium |
| | Stainless steel 316 |
| • Degree of protection | |
| Plastic, Mechanics brass, Pressure gauge block anodised aluminium | IP31 |
| Stainless steel, Mechanics brass nickel-plated, Pressure gauge block anodised aluminium | IP44 |
| Stainless steel, Mechanics stainless steel 316, Pressure gauge block stainless steel 316 | IP54 |
| Connections, electrical | |
| • Screw terminals | 2.5 $mm^2$ AWG30-14 |
| • Cable gland | M20x1.5 or 1/2-14 NPT with NPT adapter |
| Connections, pneumatic | G¼ or ¼-18 NPT |

## 10.6 Controller

| Controller | |
|---|---|
| Control unit | |
| • Five-point controller | Adaptive |
| • Deadband | |
| Adjustable peak value | ± 0.1 to 3%, plus hysteresis (half of the deadband, but at least 0.2%) |
| Minimization of the peak value | Always active |
| Analog input (AI), terminal 6 and 7 | |
| • Sampling interval | 50 ms |
| • Resolution | 0.05% |
| Position detection | |
| • Sampling interval | 10 ms |
| • Resolution at 10 mm stroke height | 0.1% |
| • Temperature influence | 0.1%/10 C (0.1%/18 °F) |

# Dimension drawings

# 11

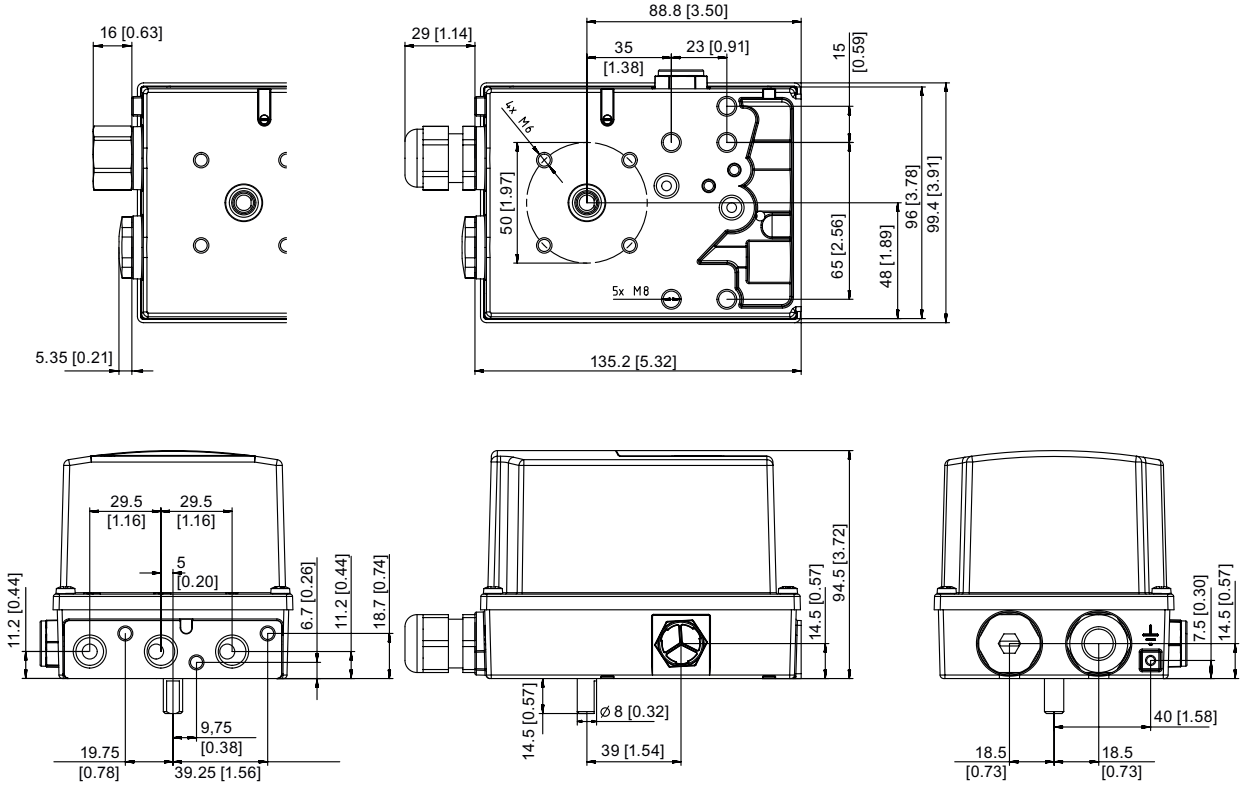


Figure 11-1 Dimension drawing, dimensions in mm (inch)

# Product documentation and support

# A

## A.1 Product documentation

Process instrumentation product documentation is available in the following formats:

- Certificates (http://www.siemens.com/processinstrumentation/certificates)
- Downloads (firmware, EDDs, software) (http://www.siemens.com/processinstrumentation/downloads)
- Catalog and catalog sheets (http://www.siemens.com/processinstrumentation/catalogs)
- Manuals (http://www.siemens.com/processinstrumentation/documentation)
  You have the option to show, open, save, or configure the manual.
  - "Display": Open the manual in HTML5 format
  - "Configure": Register and configure the documentation specific to your plant
  - "Download": Open or save the manual in PDF format
  - "Download as html5, only PC": Open or save the manual in the HTML5 view on your PC

You can also find manuals with the Mobile app at Industry Online Support (https://support.industry.siemens.com/cs/ww/de/sc/2067). Download the app to your mobile device and scan the device QR code.

### Product documentation by serial number

Using the PIA Life Cycle Portal, you can access the serial number-specific product information including technical specifications, spare parts, calibration data, or factory certificates.

#### Entering a serial number

1. Open the PIA Life Cycle Portal (ttps://www.pia-portal.automation.siemens.com).
2. Select the desired language.
3. Enter the serial number of your device. The product documentation relevant for your device is displayed and can be downloaded.

To display factory certificates, if available, log in to the PIA Life Cycle Portal using your login or register.

#### Scanning a QR code

1. Scan the QR code on your device with a mobile device.
2. Click "PIA Portal".

To display factory certificates, if available, log in to the PIA Life Cycle Portal using your login or register.

# A.2 Technical support

## Technical support

If this documentation does not completely answer your technical questions, you can enter a Support Request (http://www.siemens.com/automation/support-request).

Additional information on our technical support can be found at Technical Support (http://www.siemens.com/automation/csi/service).

## Service & support on the Internet

In addition to our technical support, Siemens offers comprehensive online services at Service & Support (http://www.siemens.com/automation/serviceandsupport).

## Contact

If you have further questions about the device, contact your local Siemens representative at Personal Contact (http://www.automation.siemens.com/partner).

To find the contact for your product, go to "all products and branches" and select "Products & Services > Industrial automation > Process instrumentation".

Contact address for business unit:
Siemens AG
Digital Industries
Process Automation
Östliche Rheinbrückenstr. 50
76187 Karlsruhe, Germany

# Index


## A

Actuating pressure
  Figure, 20
  Position, 9

## B

Buttons
  Position, 9

## C

Cable gland
  Technical data, 41
Carrier, 15
Catalog
  catalog sheets, 45
Certificates, 45
Cleaning, 37
Connecting terminals, 9
Connection
  Pneumatic, 20
Customer Support, (Refer to Technical support)

## D

Disposal, 38
Documentation
  Edition, 5
Downloads, 45

## E

Exhaust air outlet
  Position, 9

## F

Freezing
  Exhaust air outlet, 11

## H

History, 5
Hotline, (Refer to Support request)

## I

I/Os
  Technical data, 42

## L

Local display
  Position, 9

## M

Maintenance
  Device status symbols, 33
Manuals, 45
Material
  Technical data, 41
Mechanical construction
  Technical data, 41, 42
Mounting kit
  Linear actuator, 12

## P

Part-turn actuator
  Mounting, 15
Pressure gauge
  Technical data, 42
Pressure gauge block
  Torque, 42

## R

Return procedure, 37

## S

Safety position, 21
Scope of delivery, 6
Service, 46
Service and support
  Internet, 46
Sound absorber
  Position, 9

Supply pressure
Position, 9
Support, 46
Support request, 46
Symbol
Device status, 33
Maintenance, 33
Operation mode, 33

## T

Technical support, 46
partner, 46
personal contact, 46
Tightening torque
Technical data, (Torque)
Torque, 41

## W

Weight
Technical data, 41
Wiring diagram
Position, 9