Doosan Infracore
Portable Power

Ingersoll Rand

ELECTRICAL/ELECTRONIC SERVICE MANUAL FOR:

P425WIR (7/120)
XP375WIR (9/110)
HP350WIR (4/105)

CODE: C

P600WIR
HP450WIR
VHP400WIR

CODE: B

This manual contains important safety information.
Do not destroy this manual.
This manual must be available to the personnel who operate and maintain this machine.

Doosan Infracore Portable Power
P.O. Box 868 - 501 Sanford Ave
Mocksville, N.C. 27028
www.doosanportablepower.com

Book: 23227143 (01/08) Rev A
Revised (10-12)

Doosan purchased Bobcat Company from Ingersoll-Rand Company in 2007. Any reference to Ingersoll-Rand Company or use of trademarks, service marks, logos, or other proprietary identifying marks belonging to Ingersoll-Rand Company in this manual is historical or nominative in nature, and is not meant to suggest a current affiliation between Ingersoll-Rand Company and Doosan Company or the products of either.

TABLE OF CONTENTS

SECTION 1 . . . . . Manual Description

SECTION 2 . . . . . General Information And Operational Theory

SECTION 3 . . . . . Service Tools

SECTION 4 . . . . . Electronic Systems Troubleshooting Procedures And Techniques

SECTION 5 . . . . . System Schematic Diagrams

SECTION 6 . . . . . Electronic Component Location Drawings

SECTION 7 . . . . . Individual Circuit Diagrams

SECTION 8 . . . . . Electrical Connector Information

SECTION 9 . . . . . Electrical Parts List

SECTION 10 . . . . . Alerts and Shutdowns List

SECTION 11 . . . . . Recommended Spare Parts

SECTION 12 . . . . IR Engine

SECTION 1

MANUAL DESCRIPTION

This manual contains all of the information concerning the electrical and electronic systems for the P425 Family of compressors. It provides all information necessary to service, troubleshoot and order parts for this machine.

It is organized into 12 sections.

Sections 2 – 4 cover systems operation and troubleshooting procedures.

Sections 5 – 7 have location diagrams, drawings of specific circuits and systems schematics.

Section 8 has information concerning the electrical connectors used, including removal and replacement.

Section 9 contains the parts list with ordering information.

Section 10 contains the list of Alerts and Shutdowns.

Section 11 contains a list of recommended spare parts for servicing.

Section 12 contains engine information.

SECTION 2

GENERAL INFORMATION
and
OPERATIONAL THEORY

GENERAL INFORMATION AND OPERATIONAL THEORY

General

The P425 Family of machines has an electronic monitor and control system to provide discharge air pressure control and engine and package monitor functions. The system uses the WEDGE controller to perform these functions. The electrical system connects all the necessary switches, sensors and transducers to the WEDGE controller in order for it to perform the monitor and control functions.

WEDGE Controller

The WEDGE controller is the heart of the machine monitor and control system. It provides data collection, alarming and control functions for compressor operations. It is a microcontroller based unit with analog and digital inputs and outputs.

The WEDGE controller is attached to a bracket mounted to the lifting bail over the fuel tank. A laminate is attached to the bracket so the annunciator lamps and 4-digit LED display can be seen.

The first function of the WEDGE controller is to scan all analog and digital inputs at a fixed interval. These inputs are scanned every 50 milliseconds. The values are then compared against minimum and maximum values and an ALERT or SHUTDOWN is issued, if a value is out of range. The WEDGE will indicate SHUTDOWNS and ALERTS for the engine and compressor system. These are indicated through fault codes that are displayed on the WEDGE 4-digit LED display. The WEDGE also has ten dedicated function annunciator LED's to indicate problems with selected parameters. The various ALERTS and SHUTDOWNS are listed in SECTION 10 of this manual.

The second function of the WEDGE controller is machine discharge pressure control. The WEDGE monitors the regulation system air pressure and varies the engine throttle to maintain the setpoint discharge air pressure. The setpoint pressure is set using the regulator on the separator tank.

The third function of the WEDGE controller is to communicate with the diesel engine via the J1939 CAN network. It retrieves diagnostic information over J1939. The WEDGE controller will display any engine faults received by the CAN network on the 4-digit LED display. A placard is provided on the machine to interpret these fault codes.

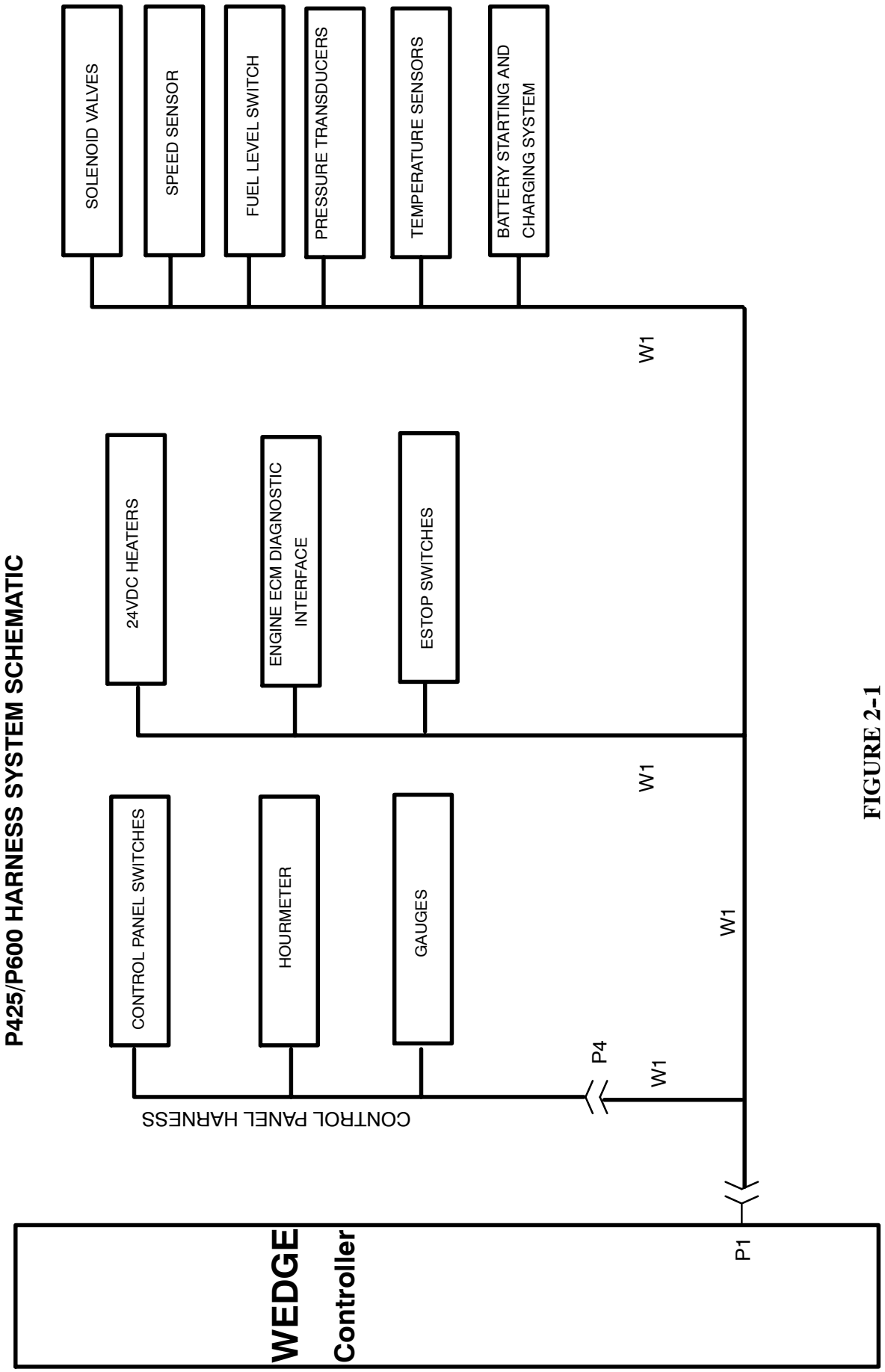
P425/P600 HARNESS SYSTEM SCHEMATIC
SOLENOID VALVES
SPEED SENSOR
FUEL LEVEL SWITCH
PRESSURE TRANSDUCERS
TEMPERATURE SENSORS
BATTERY STARTING AND CHARGING SYSTEM
W1
24VDC HEATERS
ENGINE ECM DIAGNOSTIC INTERFACE
ESTOP SWITCHES
W1
CONTROL PANEL SWITCHES
HOURMETER
GAUGES
W1
P4
W1
CONTROL PANEL HARNESS
P1
WEDGE
Controller

FIGURE 2-1

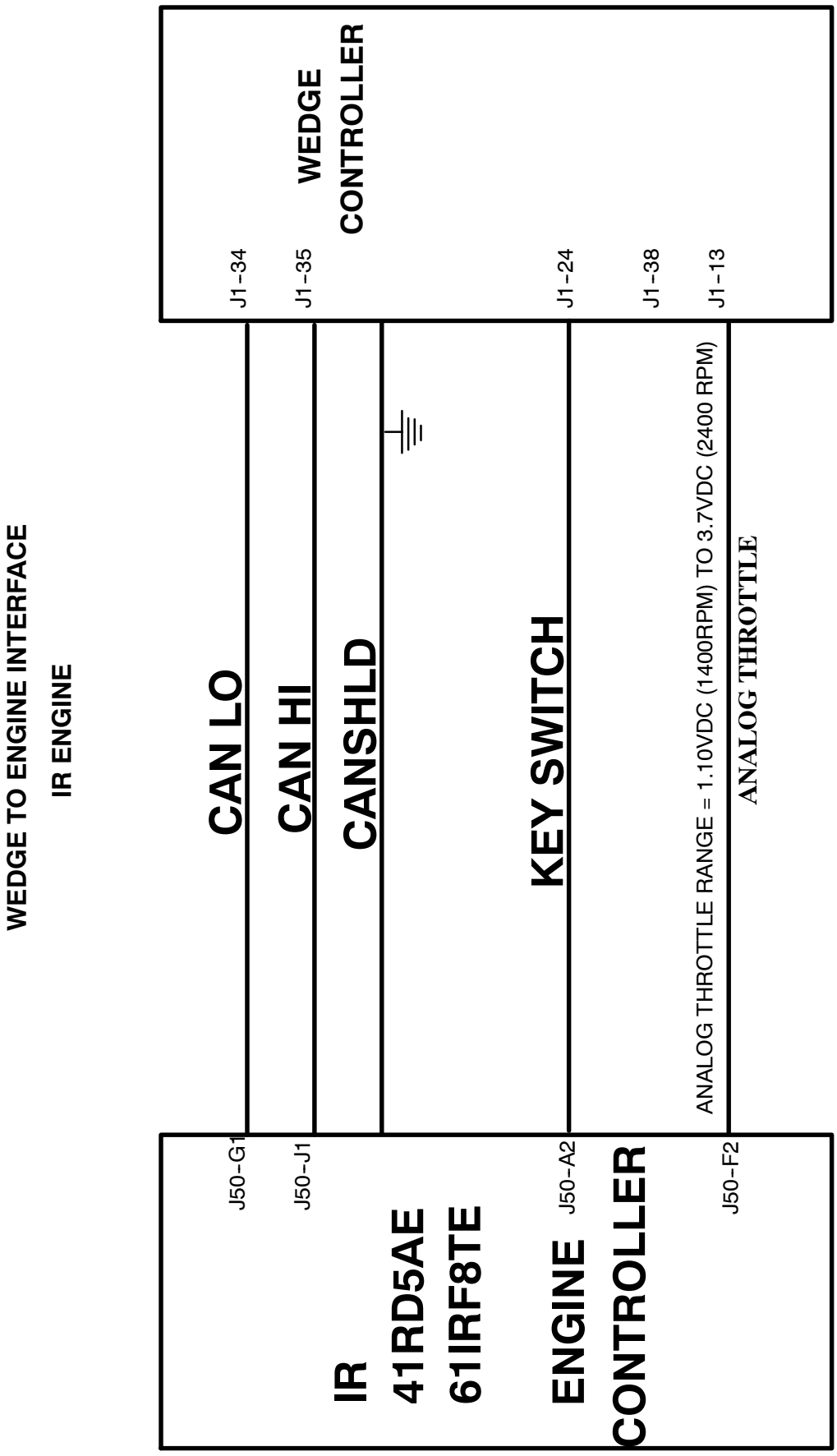
WEDGE TO ENGINE INTERFACE
IR ENGINE
WEDGE CONTROLLER
J1-34
J1-35
J1-24
J1-38
J1-13
CAN LO
CAN HI
CANSHLD
KEY SWITCH
ANALOG THROTTLE RANGE = 1.10VDC (1400RPM) TO 3.7VDC (2400 RPM)
ANALOG THROTTLE
J50-G1
J50-J1
J50-A2
J50-F2
IR
41RD5AE
61IRF8TE
ENGINE
CONTROLLER

FIGURE 2-2

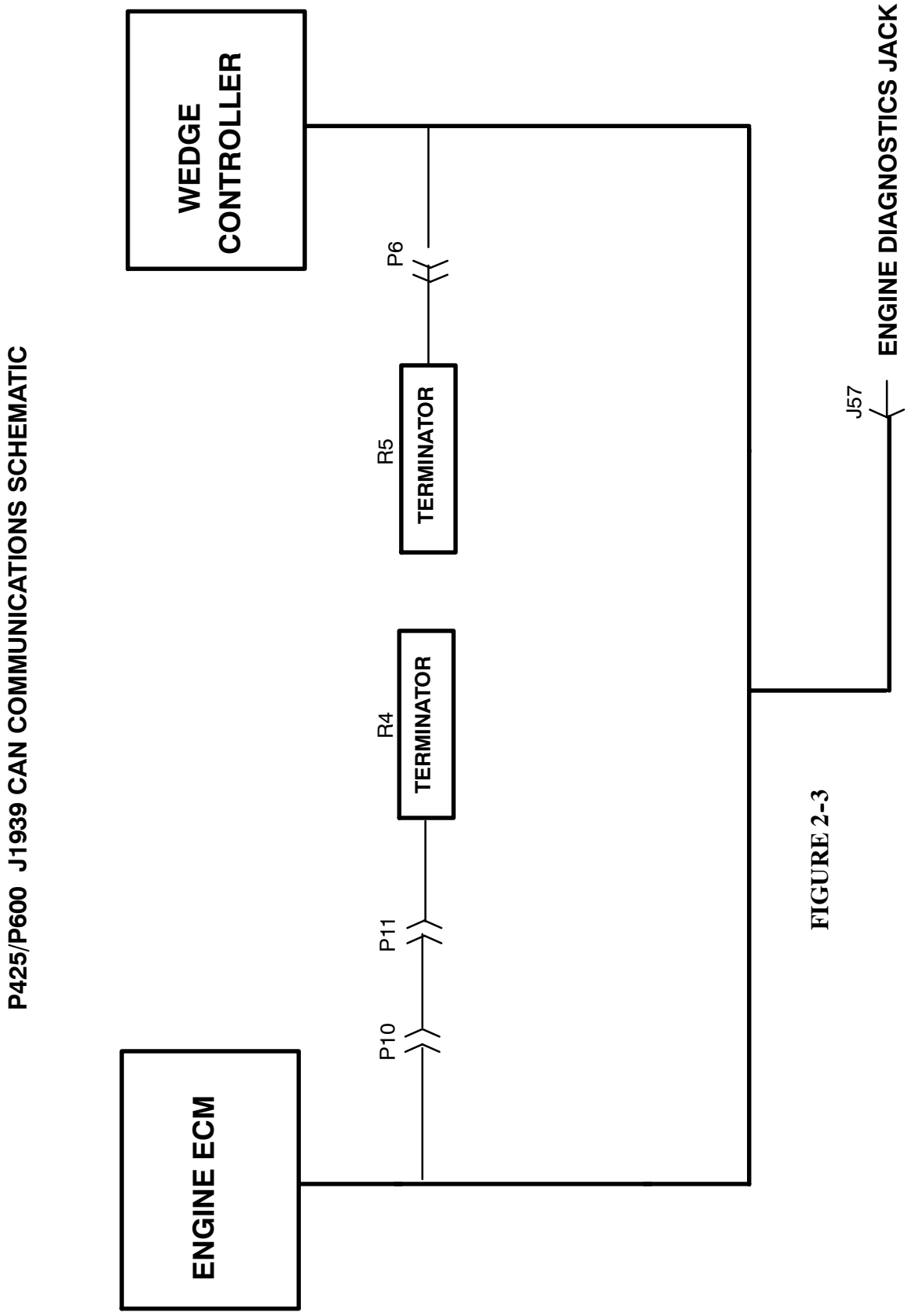
P425/P600 J1939 CAN COMMUNICATIONS SCHEMATIC
WEDGE CONTROLLER
P6
R5
TERMINATOR
R4
TERMINATOR
P11
P10
ENGINE ECM
J57
ENGINE DIAGNOSTICS JACK

FIGURE 2-3

The wedge uses an analog signal to communicate with the IR engine. This signal has a range of 1.1V to 3.7V. This range corresponds to an engine speed range of 1500 to 2400 RPM.

Figure 2-2 shows the signals between the engine controller and the WEDGE controller.

Sensors and Transducers

The electronics system contains sensors and transducers that are used to collect data from the compressor. The temperature is measured by a thermistor. This device exhibits a change in resistance as the temperature changes. The resistance change causes an input voltage change to the WEDGE controller input and is interpreted as a temperature change.

The electronics system also uses pressure transducers to measure compressor pressure changes. These devices have an output signal of .45 VDC to 4.5 VDC, corresponding to 0 psi and the maximum measured psi for a particular device. The maximum pressure transducer ranges are 100 or 225 psi. The 100 and 225 psi devices are gauge pressure devices. These transducers are provided with 5 VDC excitation to power the device. These are three wire devices: excitation, signal and ground.

Digital Inputs and Outputs

The WEDGE controller scans digital inputs such as switch contacts. These are either “ON” (24VDC) or “OFF” (0 VDC). These digital inputs are connected to switches within the package such as the key start switch, air filter switches and IQ filter switches.

The WEDGE controller provides 24 VDC digital outputs to control solenoids, start compressor and DC heaters. These are 24 VDC “ON” and 0 VDC “OFF”. They are current limited and short circuit protected.

Controller Outputs

The WEDGE controller has four types of outputs: frequency, pulse width modulated, analog and 24VDC digital (ON/OFF). The analog output is used as the throttle signal to the engine.

The WEDGE varies the analog signal from 1.1 to 3.7 volts, corresponding to 1500 to 2400 RPM. This signal is used with the IR engine. The frequency throttle signal is used with the Cummins engine and the pulse width modulated signal is used with the CAT engine.

Pressure Control

The discharge pressure is controlled by manipulating the engine speed and compressor inlet valve position. The inlet valve position is controlled pneumatically and the engine speed is determined by the WEDGE controller. The WEDGE measures the pneumatic system regulation pressure and computes an engine throttle setting. This throttle setting is sent to the engine via the frequency throttle, Analog, PWM or J1939 throttle, depending on which technique is used. The engine controller will control engine speed to this throttle setting.

Air discharge pressure control is engaged once the machine service air switch is pressed and the machine is in the loaded state. It is not active while the machine is in idle state.

Electronic Engine P425/P600 Family of Machines

The P425 Family of machines contains an emissions certified diesel engine. In order to meet the emissions requirements, the engine has an electronic control system.

The control system handles all monitor, alarm and control functions for the engine. The WEDGE controller communicates with the engine controller over the J1939 CAN network.

The WEDGE controller sends throttle settings to the engine and receives diagnostic and run time data from the engine over the J1939 CAN network. An analog throttle interface is currently used with the engine. Figure 2-2 shows the connections between the WEDGE controller and the engine controller.

J1939 Data Link

The CAN network is a single pair shielded cable located with the W1 main harness. Figure 2-3 shows a layout of the CAN harness or "backbone" as it is referred to. The termination resistors (Terminator) are important to prevent reflections on the transmission line and must be in place for the network to function properly.

The engine diagnostics connector is located on the left side of the engine. This is used to connect the engine manufacturer's service tools to the CAN network. This connector also provides 24 VDC to power these service tools.

Electrical System

The electrical system consists of the wiring harnesses and associated electrical devices such as relays, switches, lights, solenoids and alarm horn. There is one wiring harness in the P425 machine.

Wiring Harness P/N 22969554

This harness has improved connectors and sealing to reduce moisture and condensate effects and the machine ID plug has been removed.

The schematic diagrams show the connections for this harness. Figure 2-1 is a system schematic showing harness connection with devices and controllers. Section 8 includes information on connectors used in the harness.

The electrical circuits are protected using ATC style fuses. A fuse should only be replaced with one of the same rating. Replacing a fuse with one of a large rating could lead to harness damage. If a fault occurs and the circuit does not have the appropriate size fuse, wires could be burned in the harness and damage other circuits.

Machine ID

Software versions 1.60 and greater use software to set the machine ID. Versions less than 1.60 use an ID resistor plug, R2. The ID plug is located near the wedge controller on the W1 harness trunk. The resistor plugs are molded in colors for easy identification. Refer to Section 7, Individual Circuit Diagrams and the page entitled R2 MACHINE ID PLUG for details.

It is recommended that all machines be upgraded to Version 1.60 or greater. The software set machine ID is much more reliable than the resistor plug.

KEY ELECTRICAL COMPONENTS FUNCTION

PT1:

PT1 is a 0-225 psi gauge pressure transducer that measures discharge air pressure.

PT2:

PT2 is a 0-100 psi gauge pressure transducer that measures regulation system pressure.

U1:

U1 is resistive level detector that measures the fuel level in the fuel tank.
It provides a continuous reading of fuel level. It also has a switch for low fuel level and low fuel shutdown.
These switches connect to WEDGE.

RT1:

RT1 is a 10K ohm Thermistor temperature sensor that measures separator tank temperature.
Its range is -30 to 255° F.

RT2:

RT2 is a 10K ohm Thermistor temperature sensor that measures airend discharge temperature.
Its range is -30 to 255°F.

K1:

K1 is SPST, 24VDC relay used to activate the engine starter.

K2:

K2 is a SPST, 24VDC relay used to activate the engine inlet heater.

L1:

24VDC Solenoid Valve, normally open valve (de-energized state)

CONTROL PANEL

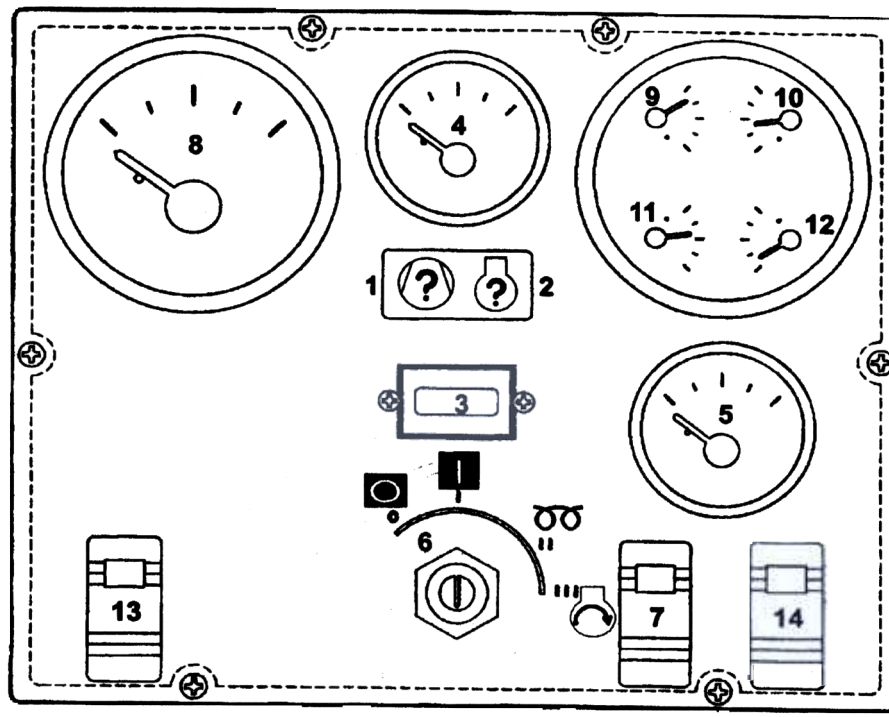

DIAGNOSTIC SHUTDOWN (Standard)

Compressor Fault: Indicates shutdown due to compressor system fault. Refer to fault code list in Section 10.

2. **Engine Fault:** Indicates shutdown due to engine fault. Refer to fault code list in Section 10.
3. **Hourmeter:** Indicates machine operating hours.
4. **Discharge Air Pressure Gage:** Indicates pressure in receiver tank, psi (kPa).
5. **Fuel Level Gage:** Indicate fuel level in tank.

CONTROLS (Standard)

6. **Power Switch:** Flip "ON" to activate systems prior to starting. Flip 'off" to stop engine.
7. **Service Air Switch:** After warm-up, PUSH. Provides full air pressure at the service outlet.

OPTIONAL CONTROLS

8. **Engine Speed Gauge:** Indicates engine speed.
9. **Discharge Air Temp. Gauge:** Indicates in °F and °C. Normal operating range: 185°F/85°C to 248°F/120°C.
10. **Engine Oil Pressure Gauge:** Indicates engine oil pressure psi (kPa).
11. **Engine Water Temp Gauge:** Indicates coolant temperature with normal operating range from 180°F/82°C to 210°F/99°C.
12. **Voltmeter:** Indicates battery condition.
13. **Spare**
14. **Wait to Start Lamp**

OPERATIONAL INFORMATION

P600 Family

Power "ON" at Control Panel:

1. Key switch signal (24VDC) supplied to engine ECU by WEDGE controller

Engine Start-up:

When the key is switched to the engine crank position:

1. K1 auxiliary start relay is engaged.
2. Run/Start solenoid valve (L1) is opened (energized).

Note: Run/Start solenoid stays open for 10 seconds after the key is released if the engine does not start.

When the engine speed reaches 600 RPM (engine start declared):

1. WEDGE controller sets engine speed to 1600 RPM.

When the engine speed reaches 1450 RPM:

1. Run/Start solenoid valve (L1) is closed (de-energized).
2. Unloader solenoid valve (L2) is opened (energized).

When the separator tank pressure reaches 50 psi:

1. Run/Start solenoid valve (L1) is opened (energized).

After 5 seconds:

1. Engine speed is set to idle (1500 RPM if airend discharge temperature is 150 degrees F, or if the J1939 is functioning, the engine coolant is 100 degrees F. Otherwise, the engine idle stays at 1500 RPM.

Loading:

When the "Service Air" switch is pushed:

1. The WEDGE sets engine speed to 2400 RPM

When engine speed reaches 2200 RPM:

1. Run/Start solenoid valve (L1) is closed (de-energized).

After 2 seconds and the regulation system pressure is 4 psi or greater:

1. The WEDGE initiates compressor pressure control via engine speed control.

OPERATIONAL INFORMATION

P425 Family

Power "ON" at Control Panel:

1. Key switch signal (24VDC) supplied to engine ECU by WEDGE controller

Engine Start-up:

When the key is switched to the engine crank position:

1. K1 auxiliary start relay is engaged.
2. Run/Start solenoid valve (L1) is opened (energized).

Note: Run/Start solenoid stays open for 10 seconds after the key is released if the engine does not start.

When the engine speed reaches 600 RPM (engine start declared):

1. WEDGE controller sets engine speed to 1600 RPM.

When the engine speed reaches 1450 RPM:

1. Run/Start solenoid valve (L1) is closed (de-energized).

When the separator tank pressure reaches 50 psi:

1. Run/Start solenoid valve (L1) is opened (energized).

After 5 seconds:

1. Engine speed is set to idle (1500 RPM if airend discharge temperature is 150 degrees F, or if the J1939 is functioning, the engine coolant is 100 degrees F. Otherwise, the engine idle stays at 1500 RPM.

Loading:

When the "Service Air" switch is pushed:

1. The WEDGE sets engine speed to 2400 RPM

When engine speed reaches 2200 RPM:

1. Run/Start solenoid valve (L1) is closed (de-energized).

After 2 seconds and the regulation system pressure is 4 psi or greater:

1. The WEDGE initiates compressor pressure control via engine speed control.

READING AND SETTING THE DISPLAY UNITS

The WEDGE has four choices for display units:

- °F, PSI
- °C, Bars
- °C, kPa
- °C, Kg/cm2

To determine which units the WEDGE has been configured for:

1. With the machine power off (Key turned OFF)
2. Press and hold the “Service Air” Switch
3. Turn the key switch directly to the crank position.
4. Hold these switch positions until the 4 digit LED display on the WEDGE goes blank.
5. Release “Service Air” switch, release key switch to “ON”.

Units will be displayed for 2 seconds after which the current selection will be displayed as:

- °F, PSI will be displayed as “PSI”
- °C, Bars will be displayed as “bAr”
- °C, kPa will be displayed as “HPA”
- °C, Kg/cm2 will be displayed as “H9C”

To change the units setting:

1. With the WEDGE showing the current setting, press and release the “Service Air” switch until the desired setting appears on the display.

2. Once it appears, do not release the “Service Air” switch. Hold it in the ON position until the WEDGE restarts. This will select units selection that was displayed.

3. Release the “Service Air” switch. The compressor is ready to start.

WEDGE SERVICE DIAGNOSTICS

The WEDGE controller provides a diagnostic capability that allows various internal parameters to be viewed on the 4-digit LED display. These can be accessed with the machine stopped or while it is operating. If the machine is stopped, the "Service Air" switch on the control panel is used to toggle through the list of parameters. The P425AWIR family of machines has a toggle switch mounted beside the WEDGE controller that is used to toggle through the WEDGE diagnostics. If the machine is operating, the "Start" position of the key switch is used. To view the parameters, toggle the switch or key and a number (2-20) will appear on the LED display. After 3 seconds, it will extinguish and the parameter will be displayed. The toggle only works in the ascending order direction, but it will wrap around and start over.

Display	Parameter	Remarks
2	RPM	From Engine Flywheel Sensor (if installed)
3	Engine RPM	Filtered RPM Value
4	Reg. Sys. Pressure	PSI
5	Sep. Tank Pressure	PSI
6	Discharge Temperature	Deg F
7	Sep. Tank Temperature	Deg F
8	Engine Target RPM	Wedge Signal to Engine
9	Machine Type	Machine ID Number
10	Engine Coolant Temp.	From CAN, Deg F
11	Engine Oil Temp.	From CAN, Deg F
12	Engine Oil Pressure	From CAN, PSI
13	Intake Manifold Temp.	From CAN, Deg F
14	RPM	From CAN
15	Fault Code List	Engine codes
16	Throttle Position	From CAN
17	Boost Pressure	From CAN
18	Engine Hours	From CAN
19	Load At Speed	Percent
20	Set Machine ID	

ENTERING MACHINE ID FOR WEDGE CONTROL SYSTEMS

with V1.60 or Greater Software

For machines with the WEDGE controller mounted inside the control panel/instrument panel box, the “Service Air” switch is used to enter the machine ID. Disconnect the fuel level gauge (located in the fuel tank) before starting the process and reconnect once the process is completed.

For machines with the WEDGE controller mounted in the engine compartment, the rocker switch beside the WEDGE is used to enter the machine ID.

For the instructions below, the “Service Air” or rocker switch will be referred to as the “data input switch”.

1. Examine the machine data plate to confirm the machine model.
   Using the machine model and the machine models list on page 2 of this document, locate the proper machine ID.

2. Turn power to the ”ON” position. Machine must not be operating.

3. Toggle the data input switch twice and the number “2” will appear on the WEDGE 4-digit LED display. Continue to toggle the switch until the number “9” is reached. Read the machine ID on the display, if it matches the proper machine ID in Step 1, stop. If not, proceed to step 4.

4. Continue to toggle the switch until number “19” is reached. Push and hold the data input switch and the number “20” will appear. Continue to hold the switch. After 1 second, the current machine ID will appear in the display. Continue to hold for 9 more seconds and a blinking “-” will appear. Release the switch.

5. Toggle the data input switch, the display will show “0”. Toggle the data input switch until the proper machine ID appears on the display, then stop the toggle sequence.

6. Wait until the controller performs a reset function (or power up) (approximately 10 seconds). At reset, the controller display first goes blank, then al11 0 annunciator LED’s light, the 4-digit LED display shows all 8’s, the display then shows the installed software version and finally the display goes blank and the engine oil pressure and alternator LED begin flashing. At this point the controller has stored the machine ID selected in step 5.

7. Using the data input switch, toggle to service diagnostic number “9”.
   The number “9” will appear for 1 second and then the machine ID will appear. The ID should be the same as the one entered in steps 4-6. If not, go back to step 4 and enter the ID again.

ESA Models/Wedge Machine ID

Models	Machine ID
7/120,9/110. 10/105, 14/85	7
7/170. 10/125.14/115	8
7/120,9/110,10/105,14/85	11
7/170,10,125,14/115 from serial # 658500	12
9/230,9/270,9/300. 12/235	5
17/235,21/215	6

MSA Models/Wedge Machine ID

Models	Machine ID
P425AWIR, XP375AWIR, HP375WIR VHP300AWIR	7
P600WIR, HP450WIR, VHP400WIR	8
XP1060WCU, HP935WCU, MHP825WCU VHP750WCU	5
XHP750WCU	6
MHP825WCAT, VHP750WCAT XP1060HACAT,XP950HACAT	2
SHP825WCAT, XHP750WCAT. XHP650WCAT	3
HP1300CWCU,HP1600CWCU XHP1170WCU 1	0
XHP1070AWCAT, XHP1170WCAT. XHP1170SCAT	4
HP1600WCAT	9
HP675EWCU, XP750EWCU, HP750EWCU, XP825 EWCU	10

SIRC Models/Wedge Machine ID

Models	Machine ID
P1060WCAT, XP950WCAT, HP935WCAT MHP825WCAT .VHP750WCAT	2
XHP750WCAT	3

SECTION 3

SERVICE TOOLS

SERVICE TOOLS

Service Tools

The following special tools are recommended to perform service procedures in this manual. The tools can be purchased from Ingersoll Rand or other sources as listed.

Tool	Tool Description
22216691	Digital Multimeter (Fluke 87) Used to measure electrical circuits; Volts, amps, ohms
54729660	Packard Weather-Pack Terminal Removal Tool Used to repair Packard Electric Weather-Pack Connectors
54699632	Deutsch Terminal Removal Tool (Blue) Used to repair Deutsch connectors
54699640	Deutsch Terminal Removal Tool (Red) Used to repair Deutsch connectors
54699624	Deutsch Terminal Removal Tool (Yellow) Used to repair Deutsch connectors
22216667	Deutsch Terminal Crimp Tool (HDT-48-00) Used to crimp Deutsch connector terminals
54729710	Electrical Contact Cleaner Used to clean electrical contacts and connectors
54729728	PDA Service Tool, Virtual Technician Used to load software & extract service and fault logs
54699616	Deutsch Terminal Removal Tool Used to repair Deutsch connectors
54749544	RTD Simulator Plug Used to test RTD circuits
54749551	Thermistor Simulator Plug Used to test thermistor circuits for INTELLISYS controller systems
22073878	Thermistor Simulator Plug Used to test thermistor circuits for WEDGE controller systems
54749635	Connector Repair Kit Used to make connector repairs for Deutsch and Packard Electric Connectors
54699657	Deutsch Terminal removal Tool Used to repair Deutsch connectors
54749643	Packard Metri-Pack Terminal Removal Tool Used to repair Packard Electric connectors

22168868	Pressure Transducer Simulator Used to test pressure transducer circuits
22147540	Test Adapter Kit Test adapters for various connectors to be Used when making electrical measurements
22146393	Removal Tool Kit Assortment of most used Deutsch removal tools
22216675	Deutsch Crimp Tool (DTT -20-00) Used to crimp Deutsch connector terminals
22216683	Packard Electric Crimp Tool (12155975) Crimps 150 and 280 series pins
22255947	Packard Electric Crimp Tool (12039500) Crimps 150 series pull to seat pins
22216709	Fluke Test Lead Set (TL20) Contains needle probes, alligator clips, test leads heat shrink tubing that are used on harnesses
22216725	Fluke Insulation Piercing Probe (AC-89) Used to connect to a wire for measurements
22216733	Fluke Meter Case (C25) Case for Fluke 87 meter including storage for test leads and probes
54740675	RS232 Heavy Duty Serial Cable Connects lap top computer or PDA Service Tool to WEDGE or Intellisys controller
22252969	Wire Terminal Kit Contains a selection of terminals with corresponding heat shrink tubing that are used on harnesses
22281588	Connector Wrench
22282107	5/32 “T” hex screwdriver wrench
22282172	1/4” Flex Shaft Nutdriver Used to remove ECM connector on John Deere engines
22252993	WEDGE Connector Kit Includes the 40-pin connector housing and pins for the harness connector
22253009	CAN Communications Adapter Converts RS232 to J1939 CAN, used with lap top computer or PDA Service Tool
22253017	Adhesive Heat Shrink Assortment Selection of most used heat shrink sizes

22221303	Service Tool Kit Kit consists of the following P/N's: 22216691 22216667 22216675 22216683 54729660 54749643 54699657 22146393 22147540 22073878 54749635 22168868 22216709 22216725 22216733 54740675
22254775	ATC Fuse Assorlment Kit Kit contains 5, 7-1/2, 10, 15,20,25, and 30 Amp fuses
22254734	Packard Crimp Tool (12014254) Crimps Sealed Weather Pack Connector pins

Tool No.	Tool Description	Tool Illustration
22216691	**Digital Multimeter**	
54729660	**Weather-Pack Terminal Removal Tool**	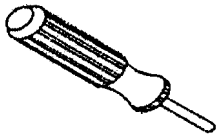
54699632	**Deutsch Terminal Removal Tool (Blue)**	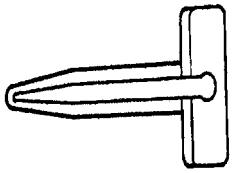
54699640	**Deutsch Terminal Removal Tool (Red)**	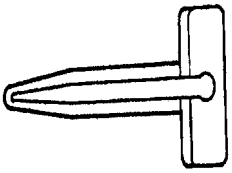
54699624	**Deutsch Terminal Removal Tool (Yellow)**	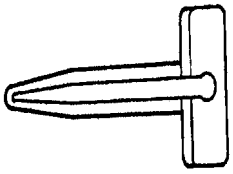
22216667	**Deutsch Crimp Tool**	

54729710	**Electrical Contact Cleaner**	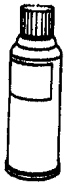
54729728	**PDA Service Tool** **VIRTUAL TECHNICIAN**	
54699616	**Deutsch Terminal Removal Tool**	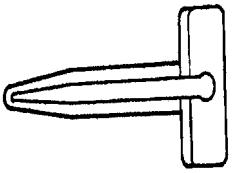
54749544	**RTD Simulator Plug**	
22073878	**Thermistor Simulator Plug**	
54749635	**Connector Repair kit**	
54699657	**Deutsch Terminal Removal Tool**	

54749643	**Packard Metri-Pack Removal Tool**	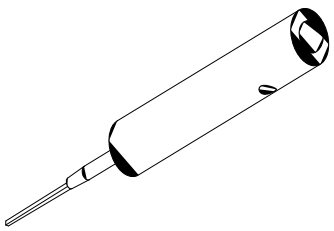
22168868	**Pressure Transducer Simulator**	
22147540	**Test Adapter Kit**	
22146393	**Removal Tool Kit**	
22216675	**Deutsch Crimp Tool**	
22216683	**Packard Electric Crimp Tool**	

22216709	**Fluke Test Lead Set**	
22216725	**Fluke Insulation Piercing Probe (single probe)**	
22216733	**Fluke Meter Case**	
54740675	**RS232 Serial Cable**	
22253969	**Wire Terminal Kit**	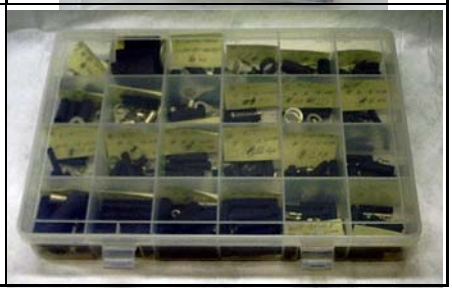

22281588 22282172	**Connector Wrenches**	
22282172	**1/4” Flex Shaft Nutdriver**	
22252993	**WEDGE Connector Kit**	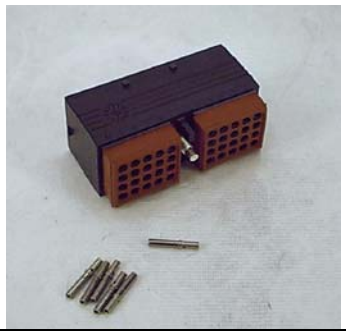
22253009	**CAN Communications Adapter**	
22253017	**Adhesive Heat Shrink Assortment**	

22255947	**Packard Electric Crimp Tool**	
22254734	**Packard Electric Crimp Tool**	

SECTION 4

ELECTRONIC SYSTEMS TROUBLESHOOTING PROCEDURES AND TECHNIQUES

General

A thorough analysis of the problem is the key to successful troubleshooting. The more information known about a problem, the faster and easier the problem can be solved.

Troubleshooting charts are included to act as a guide to the troubleshooting process. They are organized so the easiest and most logical things are performed first. It is not possible to include all the solutions to problems that can occur or list all possible problems. The charts are designed to stimulate a thinking process that will lead to solution of the problem.

Basic Troubleshooting Steps

- Collect all facts concerning the problem
- Analyze the problem thoroughly
- Relate the symptoms to the basic electrical / electronic systems and components
- Consider any recent repairs that could relate to the problem
- Double check before replacing components
- Review the controller fault log for clues as to the problem
- Determine the cause of the problem and make a thorough repair

MEASURING VOLTAGE, RESISTANCE, FREQUENCY AND DUTY CYCLE

General Measuring Guidlines:
Since the electrical system uses sealed connectors and splices, access of test points can be difficult. It is recommended that a test probe kit be used to access the signals to prevent damage to wires and connectors. Back probing connectors and insulation piercing test probes can cause damage that can cause future failures.

Measuring Voltage:
A digital voltmeter is recommended to make measurements. Voltage measurements are made by connecting the RED + lead to the desired signal and the BLACK lead to the common. The test lead connections must be secure or incorrect readings will result. Use circuit common for the Black lead, not chassis ground or other metal connection. Circuit common will be any of the BROWN wires or battery negative can be used.

IMPORTANT INFORMATION

DO NOT USE MACHINE FRAME, SHEET METAL, PIPING OR OTHER METAL COMPONENTS AS COMMON OR GROUND WHEN MAKING VOLTAGE OR FREQUENCY MEASUREMENTS.

Measuring Resistance:
Extra care must be taken when making resistance measurements. Test probe connections are crucial to correct readings. Ensure the test probe makes a solid connection with the wire(s) or connector pin(s) under test. the test probe kit may help with these types of measurements. Make sure system power is turned OFF while making resistance measurements.

Measuring Frequency:
Frequency is measured in the same manner as voltage, but the meter is set for “HZ” or frequency. Good connections are important or false readings will occur.

Measuring Duty Cycle:
To measure duty cycle, setup the meter as if measuring frequency or voltage. Select the “%” or duty cycle function and take the measurements. As of the date of this writing, Fluke is the only known digital voltmeter that has the duty cycle feature. The Fluke Model 87 Digital Meter has the duty cycle function.

TROUBLE SHOOTING FLOW CHART

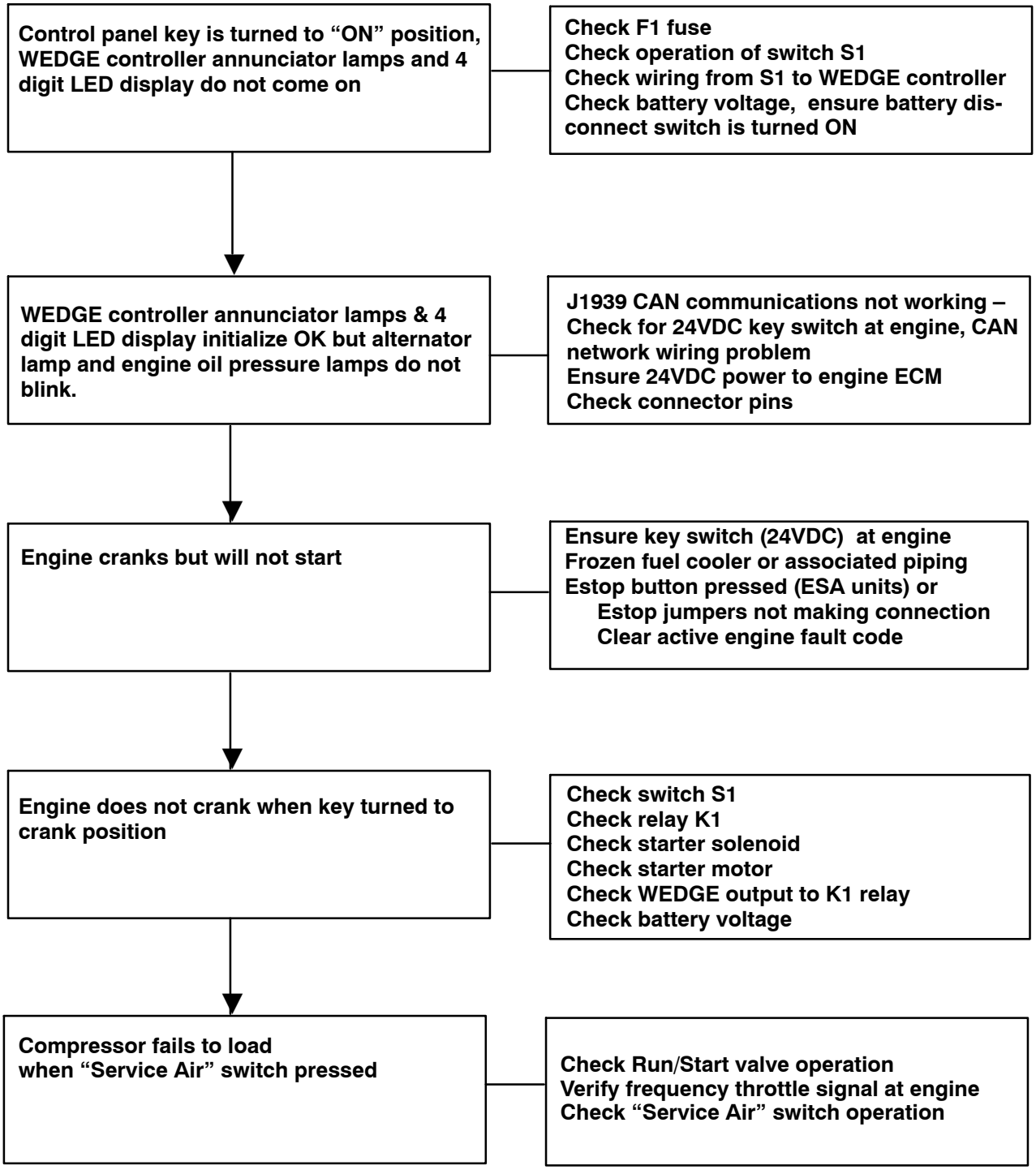

COMPRESSOR FAULT CODES
DESCRIPTION AND TROUBLESHOOTING

Following, are the descriptions of the COMPRESSOR fault codes. These are indicated when the “COMPRESSOR MALFUNCTION” lamp is illuminated. The compressor malfunction lamp is shown on the control panel picture in Section 2 of this manual. It is indicated by Item number 9.

The engine fault codes are indicated by the “ENGINE MALFUNCTION” lamp that is located under the “COMPRESSOR MALFUNCTION” lamp.
The engine fault codes are listed in Section 10 of this manual.

Be sure to determine which malfunction lamp is illuminated before beginning the troubleshooting process.

COMPRESSOR CODE 1

Engine Speed Less Than 800 RPM

Explanation:
The WEDGE has received an engine speed less than 800 RPM for 30 seconds.

Effect:
Code 1 is a shutdown condition and will shutdown the machine.

TROUBLESHOOTING STEPS

Code 1

Action	Result
Check engine fault codes for an engine shutdown. Check for engine fuel system restriction (filter).	

COMPRESSOR CODE 2

Engine Speed Greater Than 1900 RPM

Explanation:
The WEDGE has received an engine speed greater than 1900 RPM for 30 seconds.

Effect:
Code 2 is a shutdown condition and will shutdown the machine.

TROUBLESHOOTING STEPS

Code 2

Action	Result
Check engine fault codes for an engine shutdown.	

COMPRESSOR CODE 3

Engine Crank Time Exceeded

Explanation: The engine crank time has exceeded 15 seconds.
Effect: Code 3 is a shutdown condition and will shutdown the machine.

TROUBLESHOOTING STEPS

Code 3

Action	Result
Crank engine for less than 15 seconds.	

COMPRESSOR CODE 5

Engine Oil Temperature

Explanation:
The WEDGE has received an engine oil temperature greater than 252 Deg F

Effect:
Code 5 is an ALERT condition and will not halt machine operation.

TROUBLESHOOTING STEPS

Code 5

Action	Result
Step1: Refer to the engine manufacturer's service manual for instructions.	

COMPRESSOR CODE 6

Engine Intake Manifold Temperature

Explanation:
The WEDGE has received an engine intake manifold temperature greater than 180 deg F.

Effect:
Code 6 is an ALERT condition and will not halt machine operation.

TROUBLESHOOTING STEPS

Code 6

Action	Result
Step1: Refer to the engine manufacturer's service manual for instructions.	

COMPRESSOR CODE 8

Water in Fuel

Explanation:
The WEDGE has received a water in fuel indication from the engine.

Effect:
Code 8 is an ALERT condition and will not halt machine operation.

TROUBLESHOOTING STEPS

Code 8

Action	Result
Step1: Check the machine fuel system and engine fuel filters.	
Step 2: Refer to the engine manufacturer's service manual for instructions.	

COMPRESSOR CODE 10

Engine Not Responding To Throttle Command

Explanation:
The engine has not responded to a request from the WEDGE for engine speed change during engine start. This ALERT will only occur during the idle speed time, right after engine start.

Effect:
Code 10 is an ALERT condition and will not shutdown the machine. The machine will not perform properly due to the low speed condition.

Throttle Circuits:

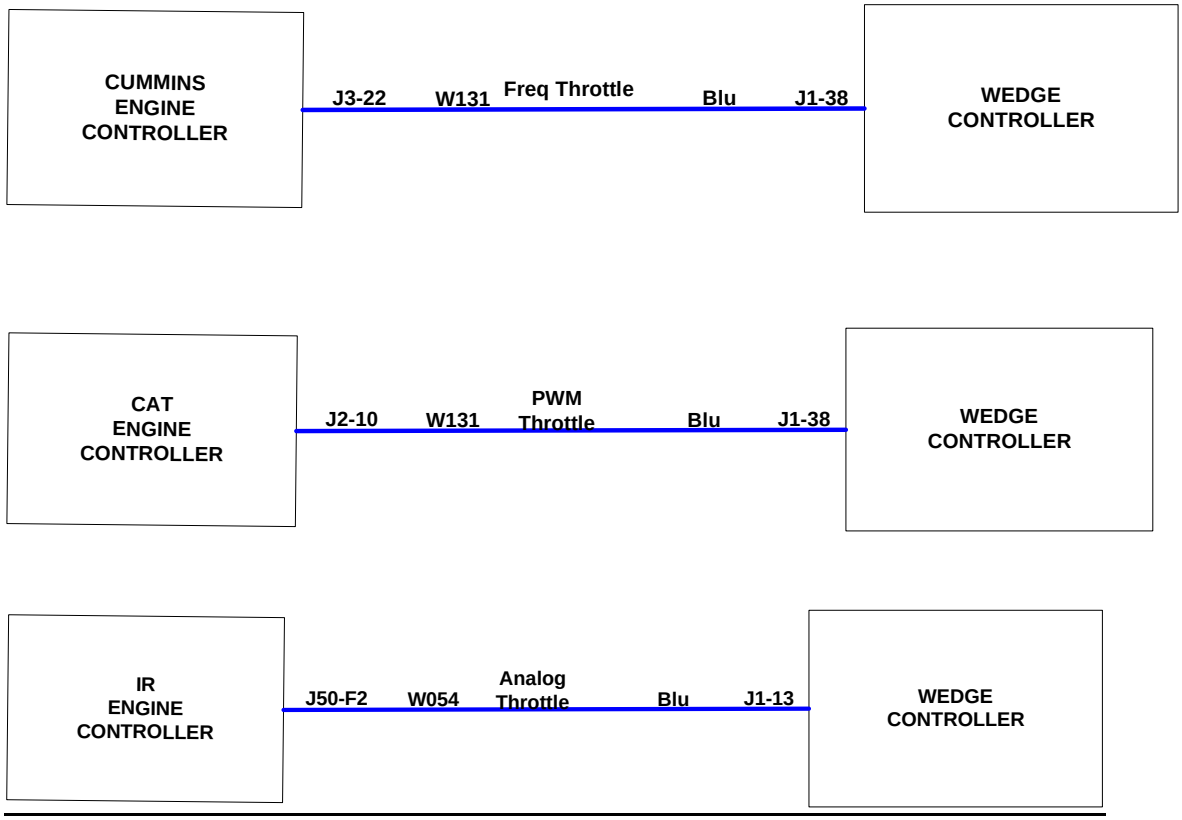

Circuit Description:

As shown in the circuits above, the WEDGE provides three types of throttle outputs: frequency, PWM and analog.

TROUBLESHOOTING STEPS

Code 10

Action	Result
Step1: Measure the throttle signal at the engine connector.	If signal not present, check wiring and verify throttle output at WEDGE.
Step 2: Engine may not be able to fuel properly due to restricted fuel filters	Replace fuel filter (s)
Step 3: Verify correct machine ID plug is installed. If so, verify resistance value of ID plug and its connection to WEDGE controller.	
Step 4: Check connector pins at WEDGE controller and connector at engine controller for corrosion.	

COMPRESSOR CODE 11

Too Many Start Attempts During Auto Start

Explanation:
The WEDGE has made three attempts to start the machine as commanded by the Auto Start Stop controller. The machine failed to start.

Effect:
Code 11 is a SHUTDOWN condition and will shutdown the machine.

TROUBLESHOOTING STEPS

Code 11

Action	Result
Step1: Check the machine fuel system and engine fuel filters.	
Step 2: Check the condition of the machine batteries.	
Step 3: Cycle machine power, activate the Auto Start input so the machine will make another start attempt. Machine will go through 3 crank cycles to attempt start before a Code 11 is issued.	

COMPRESSOR CODE 29

Engine shut itself down: reason unknown

Explanation:
The engine has shut down. The WEDGE did not shut down the engine.

Effect:
Code 29 is a SHUTDOWN condition and will shutdown the machine.

TROUBLESHOOTING STEPS

Code 29

Action	Result
Step1: Check the machine fuel system and engine fuel filters. Check for loose fittings in the fuel piping that could allow air to be drawn into the fuel system.	
Step 2: Verify the throttle signal from the WEDGE is continuously supplied to the engine.	A quick drop in the throttle signal could cause the engine to stop
Step 3: Verify battery + and – connections to the engine controller, inspect harness connections and measure voltage drop at engine ECM.	
Step 4: In the case of the I-R (John Deere) engine, check the connections for the crank sensor which is mounted at the front of the engine. Loose pin connections in the connector will cause code 29.	

COMPRESSOR CODE 31

Low Air End Oil Pressure (HP1600 Only)

Explanation:
The WEDGE received a closed contact from pressure switch S9, located in the air end on the HP1600 machine. This indicates a low oil pressure in the air end.

Effect:
Code 31 is a shutdown condition and will shutdown the machine. The cause of the low air end oil pressure must be repaired to continue machine operation.

S9 Pressure Switch Circuit:

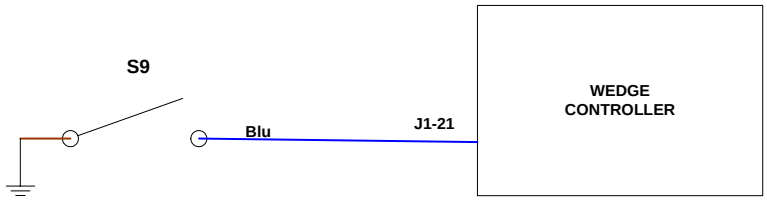

Circuit Description:

Switch S9 is a 12 psi, normally open pressure switch. If the pressure falls below 12 psi, the switch will close, indicating to the WEDGE controller a low air end oil pressure.

Component Location:

S9 is located in the back of the air end.

TROUBLESHOOTING STEPS

Code 31

Action	Result
Step1: Check the air end oil pressure with a mechanical gauge.	If > 12 psi, replace S9 If not, there is a harness or WEDGE problem.

COMPRESSOR CODE 32

RT2, Discharge Temperature Sensor Fault

Explanation:
The WEDGE has received an out of limits reading from the RT2 temperature sensor. This reading could be on the high or low end of the range. It is out of the normal range for temperature measurement.

Effect:
Code 32 is a shutdown condition and will shutdown the machine.

RT2 Temperature Sensor Circuit:

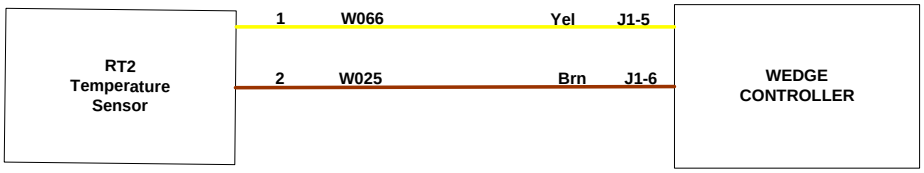

Circuit Description:

The thermistor temperature sensor connects to the WEDGE controller as shown in the schematic above. The temperature range of RT2 is –30 to 255 degrees F. The thermistor is a 10K ohm device.

Component Location:

RT2 thermistor is located in the airend discharge pipe.

TROUBLESHOOTING STEPS

Code 32

Action	Result
Step1: Substitute the thermistor simulator (I-R # 22073878) for RT2 Use the WEDGE service diagnostics to read the value for RT2 It should be approximately 32 degrees F.	Should read approx. 32 Deg F If not, there is a harness or WEDGE problem.

COMPRESSOR CODE 33

PT1 Pressure Transducer Sensor Fault

Explanation:
The WEDGE has received an out of limits reading from the PT1 pressure transducer. This reading could be on the high or low end of the range. It is out of the normal range for pressure.

Effect:
Code 33 is an ALERT condition and will not shutdown the machine. If the Transducer is defective, the machine could shutdown due to an out of range pressure

PT1Pressure Transducer Circuit:

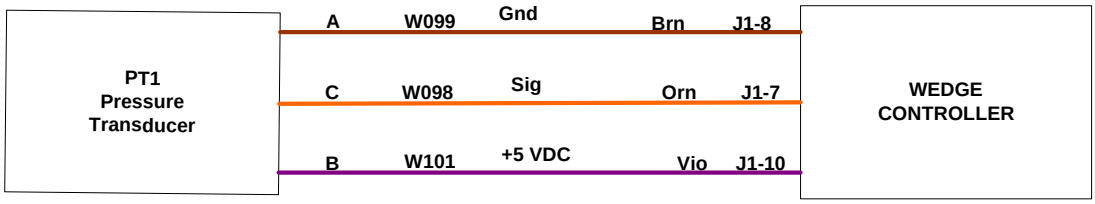

Circuit Description:

The pressure transducer is a 3-wire device that connects to the WEDGE controller as shown in the schematic above. The violet wire (W101) is the 5 VDC excitation supply. This is spliced in the harness near the breakout for the harness branch that goes to the separator tank. The “sig” wire is the output signal that has a range o .45 to 4.5 volts DC. The pressure range of this transducer is 0 – 100 psig.

Component Location:

PT1 pressure transducer is located in the top of the separator tank.

TROUBLESHOOTING STEPS

Code 33

Action	Result
Step1: Substitute the pressure transducer simulator (I-R # 22168868) for PT1. Use the WEDGE service diagnostics to read the value for PT1. It should be approximately 30 – 50 psi.	Should read 30 – 50 psi. If not, there is a harness or WEDGE problem.

COMPRESSOR CODE 34

Separator Tank Pressure Greater Than 20 psi at Crank

Explanation:
The WEDGE has received a pressure from PT1 that is greater than 20 psi at The time of engine crank.

Effect:
Code 34 is a shutdown condition and will not allow the engine to crank. Once The separator tank bleeds down below 20 psi, engine crank will be allowed.

COMPRESSOR CODE 35

Machine Over Pressure Condition

Explanation:
The WEDGE has received a pressure from PT1 that is greater than 175 psi.

Effect:
Code 35 is a shutdown condition and will shutdown the machine. The separator tank high pressure has been exceeded.

TROUBLESHOOTING STEPS

Code 35

Action	Result
Verify PT1 pressure transducer is reading correctly. The pressure simulator (IR#22168868) can be substituted for PT1. This will verify operation of harness and WEDGE controller. Using the simulator, PT1 on the WEDGE Diagnostics should read 30-50 psi.	

COMPRESSOR CODE 36

Safety Valve Open

Explanation:
The WEDGE has received a switch closure from S14. This indicates the separator tank safety valve has opened.

Effect:
Code 36 is a shutdown condition and will shutdown the machine.

S14 Pressure Switch Circuit:

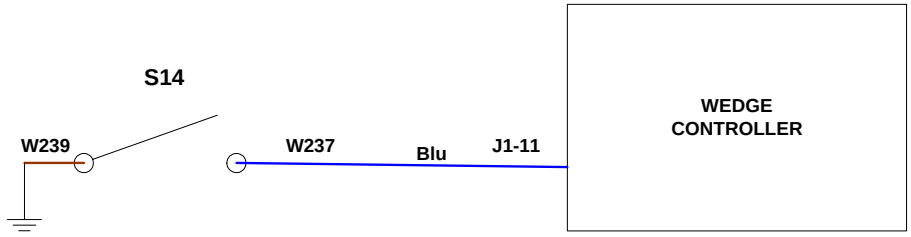

Circuit Description:

S14 is a normally open, 12 psi pressure switch. When the safety valve opens, S14's pressure is raised above 12 psi and the switch closes. This grounds the WEDGE input, indicating the safety valve has opened.

Component Location:

S14 is screwed into the outlet of the safety valve.

TROUBLESHOOTING STEPS

Code 36

Action	Result
Verify PT1 pressure transducer is reading correctly.	

COMPRESSOR CODE 50

Separator Tank Temperature

Explanation:
The WEDGE has received a separator tank temperature from RT1 that is greater than 247 degrees F.

Effect:
Code 50 is a shutdown condition and will shutdown the machine.

TROUBLESHOOTING STEPS

Code 50

Action	Result
Step1: Check for package air inlet restrictions.	
Step 2: Check for dirty or clogged coolers.	

COMPRESSOR CODE 51

Machine ID Not Valid

Explanation:
The WEDGE has not received a reading from the machine ID plug.

Effect:
Code 51 is a shutdown condition and since a valid machine ID has not been received the machine will shutdown.

Machine ID Plug Circuit:

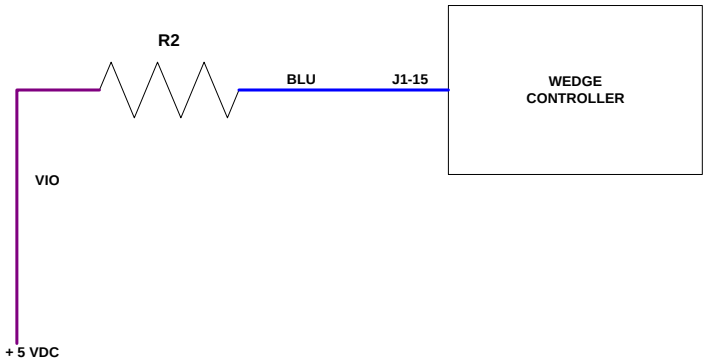

Circuit Description:

The machine ID plug is a resistor plug connected to one of the analog inputs to the WEDGE. % VDC is connected to the other pin of the resistor. The resistor values are different for each machine model.

Component Location:

The machine ID plug is located behind the control panel box, inside the machine.

TROUBLESHOOTING STEPS

Code 51

Action	Result
Step1: Make sure an ID plug is installed.	
Step 2: If an ID plug is installed, remove it and measure its resistance.	The ID plug resistance values are listed in the “Individual Circuit Diagrams” section of this service manual.

Step 3: Check for corrosion at ID Plug Pins.	

COMPRESSOR CODE 53

RT1, Discharge Temperature Sensor Fault

Explanation:
The WEDGE has received an out of limits reading from the RT1 temperature sensor. This reading could be on the high or low end of the range. It is out of the normal range for temperature measurement.

Effect:
Code 53 is a shutdown condition and will shutdown the machine.

RT1 Temperature Sensor Circuit:

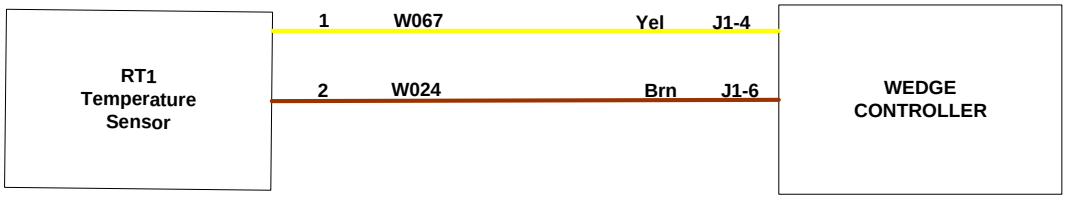

Circuit Description:

The thermistor temperature sensor connects to the WEDGE controller as shown in the schematic above. The temperature range of RT1 is –30 to 255 degress F. The thermistor is a 10K ohm device.

Component Location:

RT1 thermistor is located in the side of the separator tank.

TROUBLESHOOTING STEPS

Code 53

Action	Result
Step1: Substitute the thermistor simulator (I-R # 22073878) for RT1 Use the WEDGE service diagnostics to read the value for RT1 It should be approximately 32 degrees F.	Should read appx. 32 Deg F If not, there is a harness or WEDGE problem.

COMPRESSOR CODE 54

PT2 Regulation System Sensor Fault

Explanation:
The WEDGE has received an out of limits reading from the PT2 pressure transducer. This reading could be on the high or low end of the range. It is out of the normal range for pressure.

Effect:
Code 54 is an ALERT condition and will not shutdown the machine.

PT2 Pressure Transducer Circuit:

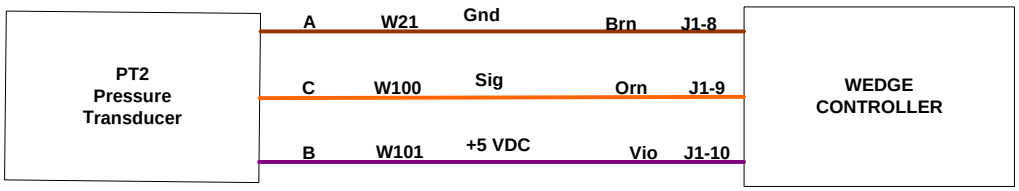

Circuit Description:

The pressure transducer is a 3-wire device that connects to the WEDGE controller as shown in the schematic above. The violet wire (W101) is the 5 VDC excitation supply. This is spliced in the harness near the breakout for the harness branch that goes to the separator tank. The “sig” wire is the output signal that has a range o .45 to 4.5 volts DC. The pressure range of this transducer is 0 – 100 psig.

Component Location:

PT2 pressure transducer is located in the pneumatic circuit near the compressor inlet valve.

TROUBLESHOOTING STEPS

Code 54

Action	Result
Step1: Substitute the pressure transducer simulator (I-R # 22168868) for PT2. Use the WEDGE service diagnostics to read the value for PT2. It should be approximately 30 – 50 psi.	Should read 30 – 50 psi. If not, there is a harness or WEDGE problem.

COMPRESSOR CODE 55

Estop Button

Explanation:
The WEDGE has received an indication that the emergency stop button has been pressed.

Effect:
Code 55 is a shutdown condition and will shutdown the machine. If the machine Is in the cranking mode when estop is pressed, the starter will be disengaged simultaneously with engine key switch signal turn off.

Emergency Stop Button Circuit:

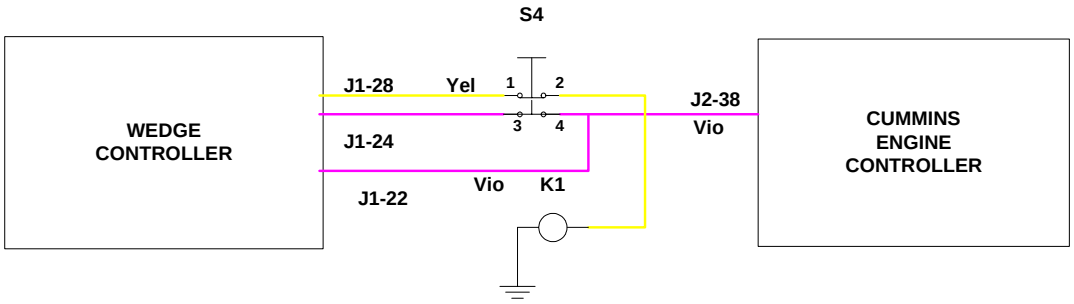

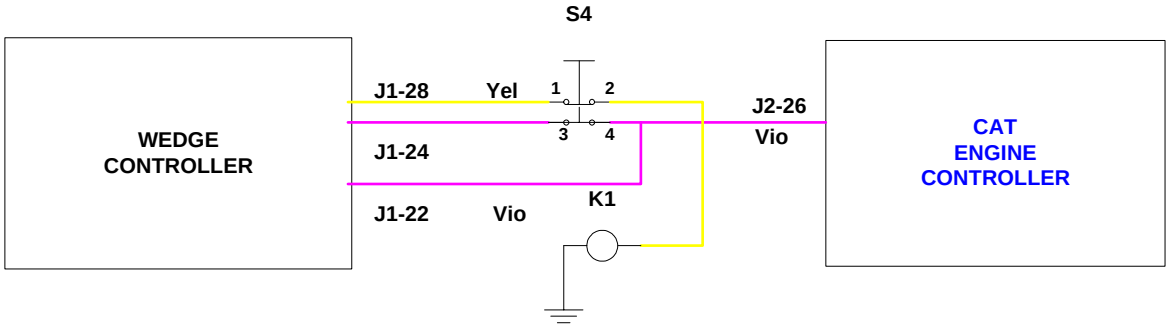

Circuit Description:

The estop button is in series with the engine key switch signal and the auxiliary start relay, K1. Pressing the button opens both of these circuits simultaneously. The WEDGE reads a sense input that is connected to the estop button to determine if the estop button is pressed.

Component Location:

The estop button is located above the machine control panel on the front of the machine.

TROUBLESHOOTING STEPS

Code 55

Action	Result
Step1: If the estop button is installed, determine if it is pressed.	Release the estop button to operate the machine.
Step 2: If the estop button is not installed, a jumper plug will be installed in the harness at the connection point for the estop button, P9.	Verify the jumper plug is functional
Step 3: Perform a continuity check of the harness wires from the WEDGE through the jumper plug to the engine connector.	

COMPRESSOR CODE 56

Minimum Pressure Not Met

Explanation:
The separator tank has not reached 50 psi within 20 seconds from time engine starts.

Effect:
Code 56 is an ALERT condition and will not halt machine operation.

TROUBLESHOOTING STEPS

Code 56

Action	Result
Step1: Check air piping system for restriction.	
Step 2: Verify engine speed has increased to 1800 rpm when Service Air switch is pressed.	

COMPRESSOR CODE 70

Serial Communications

Explanation:
The WEDGE controller cannot communicate with an external computer over the RS232 serial link.

Effect:
This code can only occur when a laptop computer or PDA Service Tool is Connected to the WEDGE. The WEDGE may otherwise be functional and This event may not be mission disabling.

RS232 Communications Circuit:

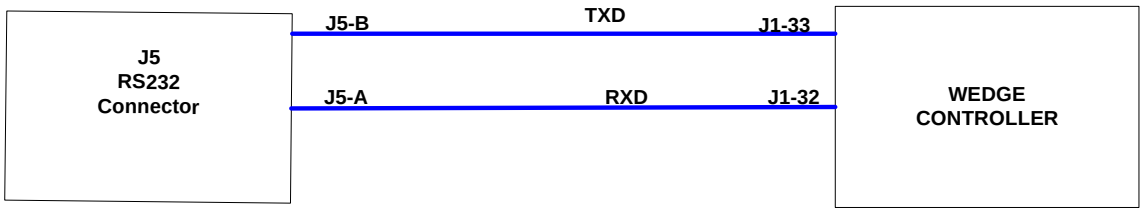

Circuit Description:

The RS232 serial communications link is used for re-programming the WEDGE controller and is the communications port used with the PDA Service Tool. The J5 connector contains the RS232 port. It is normally located very close to the WEDGE. There are two signals associated with the RS232, TXD and RXD. TXD is the transmit signal and RXD is the received signal.

Component Location:

The J5 harness connector is located near the WEDGE controller.

TROUBLESHOOTING STEPS

Code 70

Action	Result
Step1: If the current RS232 device (laptop computer, etc.) will not communicate with the WEDGE, substitute another RS232 device. Note: The second device must have proper software loaded to communicate with the WEDGE.	If second device will not communicate with WEDGE, replace the WEDGE

COMPRESSOR CODE 71

CAN Communications

Explanation:
The WEDGE controller cannot communicate with the engine controller. The J1939 CAN (Controller Area Network) broadcast of engine parameters cannot be received.

Effect:
The WEDGE will not be able to display engine parameters using the diagnostic Display function. The compressor will continue to operate since Code 71 is an ALERT condition.

CAN Communications Circuit:

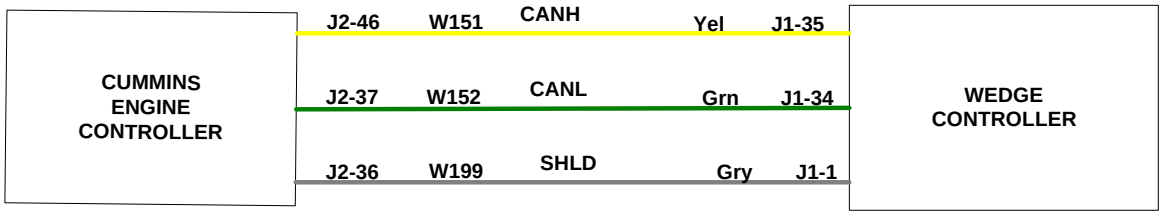

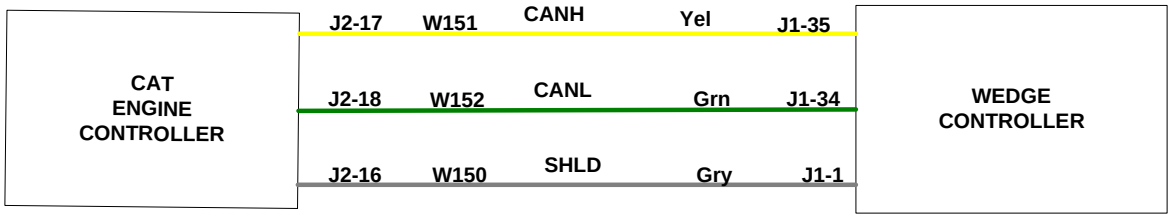

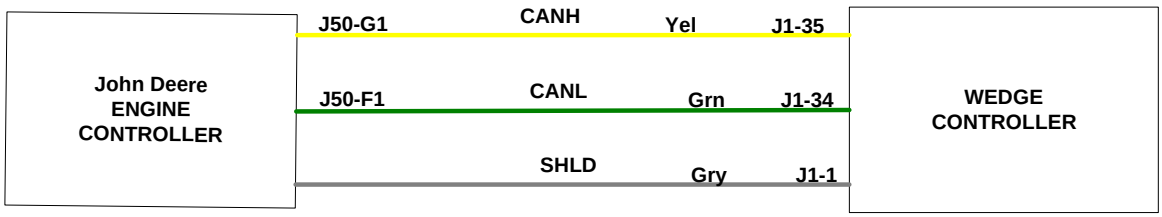

Circuit Description:

The CANH, CANL and SHLD wires are a cable that is located in the main harness. CANH refers to CAN HI and CANL refers to CAN LO and SHLD is the shield of the CAN cable. This is the cable that carries the communications between the engine and WEDGE controller and any other devices that are connected to the CAN cable. This cable is also referred to as the CAN Network since it may have multiple devices connected to it.

The CAN network has two terminating resistors, one located near the engine controller and one near the WEDGE controller. The value of each of these resistors is 120 ohms. They are connected in parallel, as shown below, across the network. The resistors are mounted in a special Deutsch connector. One connector is tagged R4 and the other is tagged R5.

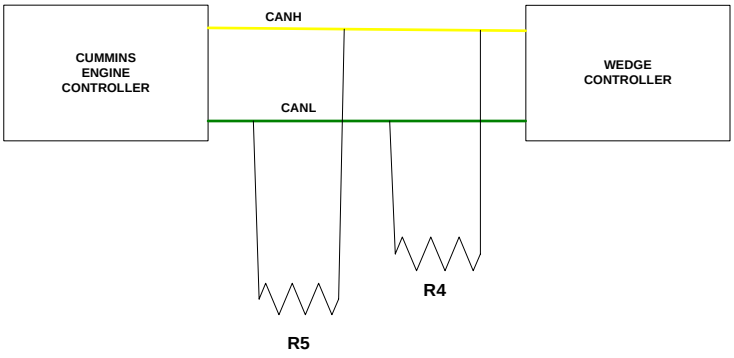

Component Location:

The Cummins engine controller is located on the left side of the engine. Connector J2 is located on the left side of the controller and is the OEM connector. The machine harness (P2) plugs into the J2 connector. The CAT controller is located on the left side of the engine. The harness P2 connector plugs into the CAT J61 customer connector located near the controller.

The WEDGE controller is mounted to the machine control panel on the back side. Resistor R5 is stubbed out of the harness near the engine controller and resistor R4 is stubbed out of the harness near the WEDGE controller.

TROUBLESHOOTING STEPS

Code 71

Action	Result
Step 1: Verify P1 harness connector pins 34, 35, and 1 are firmly seated into The connector at the WEDGE controller.	
Step 2: Verify P2 harness connector pins 37, 46, and 36 for Cummins engine or pins 17, 18, and 16 for CAT engine are firmly seated into the connector at the engine electronic controller.	
Step 3: Setup the digital multimeter to read ohms. (Refer to the section in this manual on how to use the multimeter). Disconnect P1 harness connector from the WEDGE controller. If the engine is a Cummins, disconnect the P2 harness connector from the engine controller. If the engine is a CAT engine, leave P2 connected to the engine Controller. Connect one of the multimeter test leads to P1-34 and the other test Lead to P1-35.	Meter should read approximately 60 ohms. If so, go to Step 5. If not, go to Step 4.
Step 4: If you did not get the results of Step 3, there is a problem with the wiring harness. This problem could be a defective splice, broken wire or defective wire connection at a pin. The CANH and CANL wires should be tested for continuity from P1 to P2. The resistor stub outs should be tested for continuity.	Make harness repairs as necessary.
Step 5: Setup the multimeter to read DC volts. (Refer to the section in this manual on how to use the multimeter). The harness should be connected to the engine controller and the WEDGE controller. Turn the machine power to the “ON” position, but do not start the engine. Using insulation piercing probes (I-R P/N 22216725), connect the red multimeter lead to P1-34 wire and connect the black multimeter lead to the battery negative post or one of the brown wires on the back of the control panel.	

Disconnect the test lead from P1-34 wire and connect to P1-35 wire.	Multimeter should read approximately 2.5 volts DC. Multimeter should read approximately 2.5 volts DC. If 2.5 volts cannot be read, replace WEDGE controller. If WEDGE controller is OK, harness should be checked as outlined in Step 4.

COMPRESSOR CODE 73

Auto Start Stop Controller Communications Failure

Explanation:
The WEDGE has not been able to communicate with the Auto Start Stop controller for 17 seconds. A communications failure is determined.

Effect:
Code 73 is an ALERT condition and will not stop the machine. The Auto Start system may not function properly due to communications failure.

TROUBLESHOOTING STEPS

Code 73

Action	Result
Step1: If CAN communications is OK with the engine, check the CAN-power stub connection for the Auto Start module. If CAN with the engine is not working, check CAN wiring in harness.	
Step 2: Verify the Auto Start controller has power and ground.	
Step 3: Replace the Auto Start module.	

SECTION 5
SYSTEM SCHEMATIC DIAGRAMS

P425/XP375/HP375/VHP300
7/120 9/110 10/110 14/85
SYSTEM SCHEMATIC

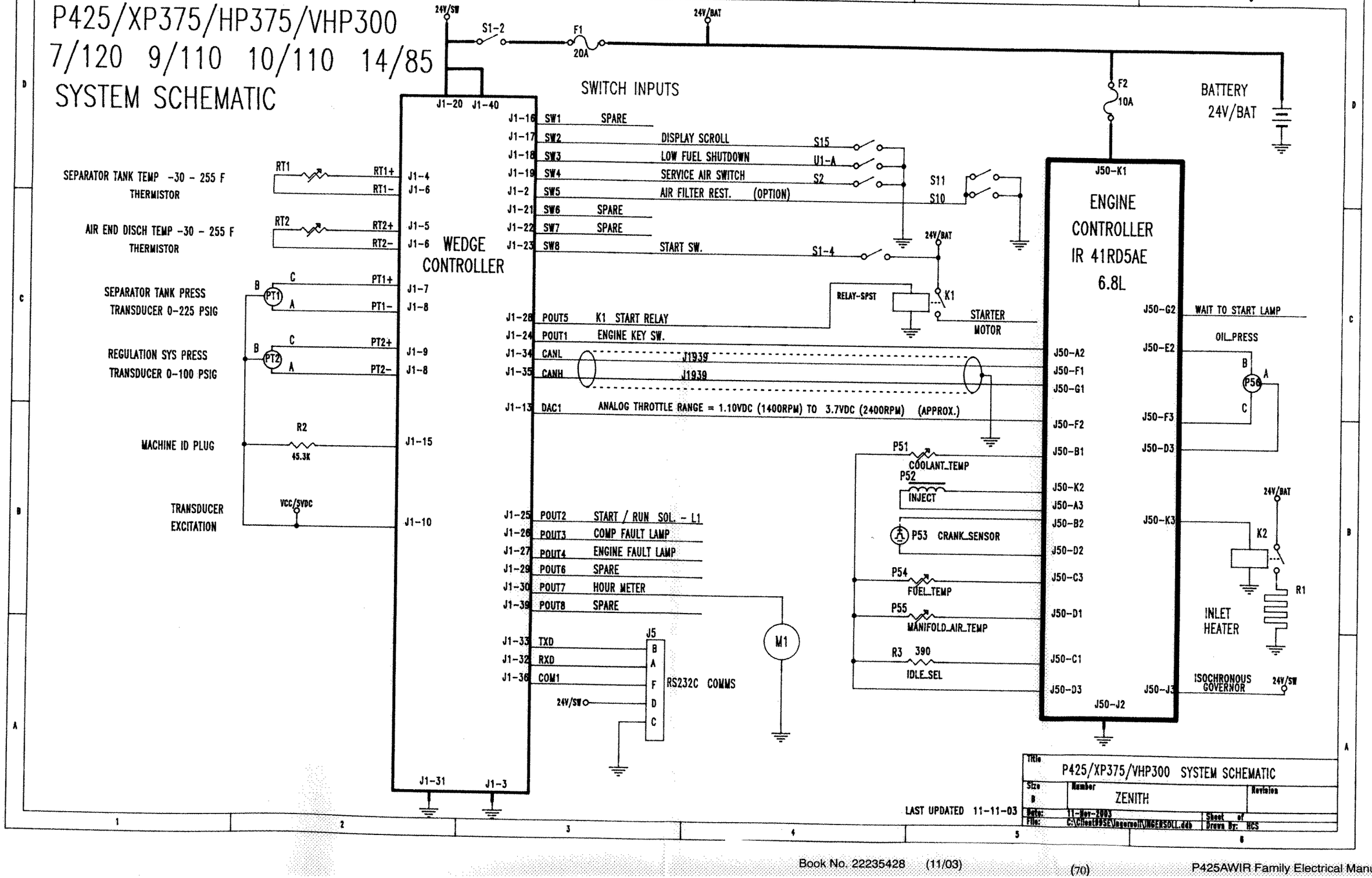

VHP400/HP450/P600 SYSTEM SCHEMATIC

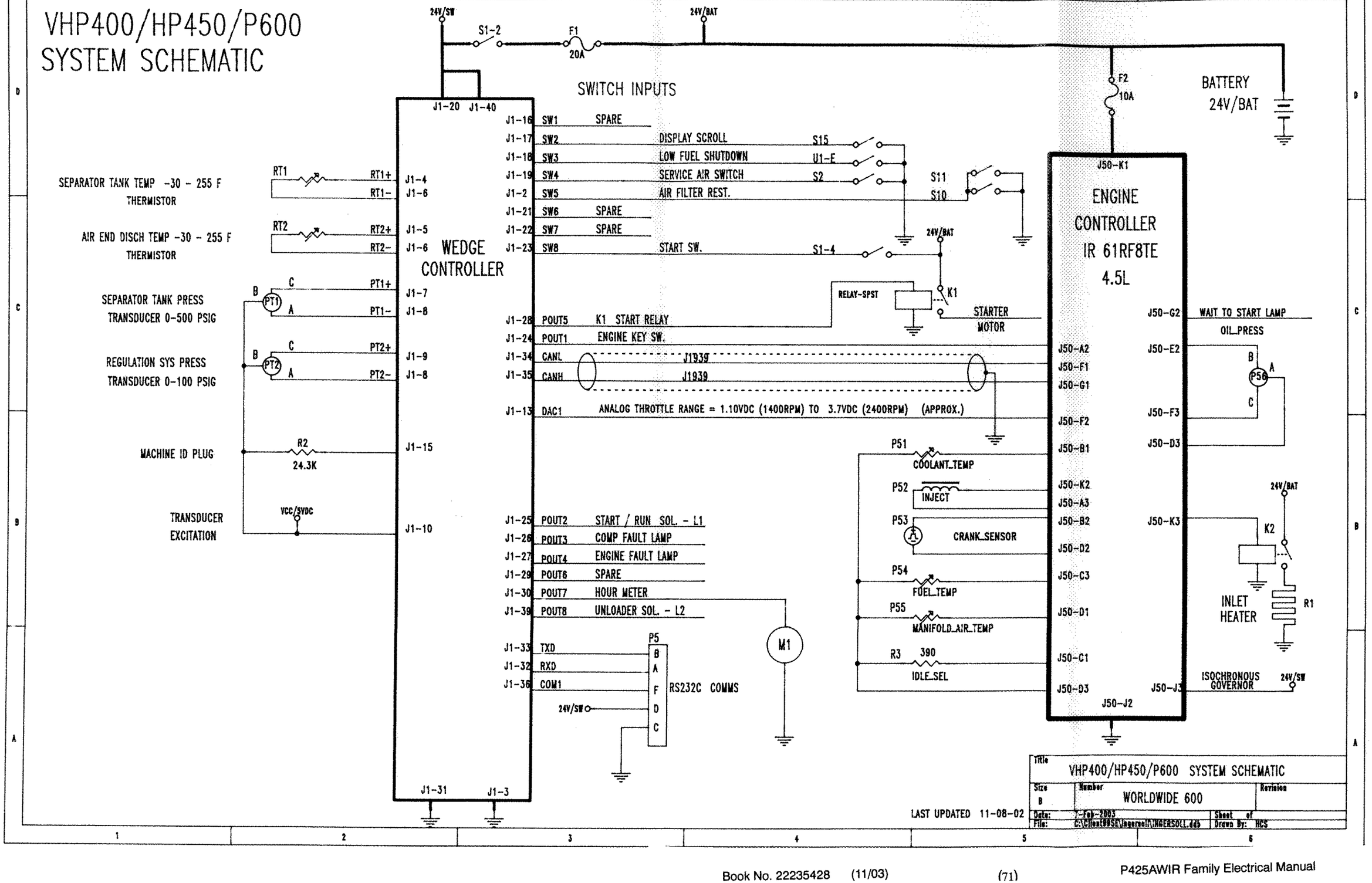

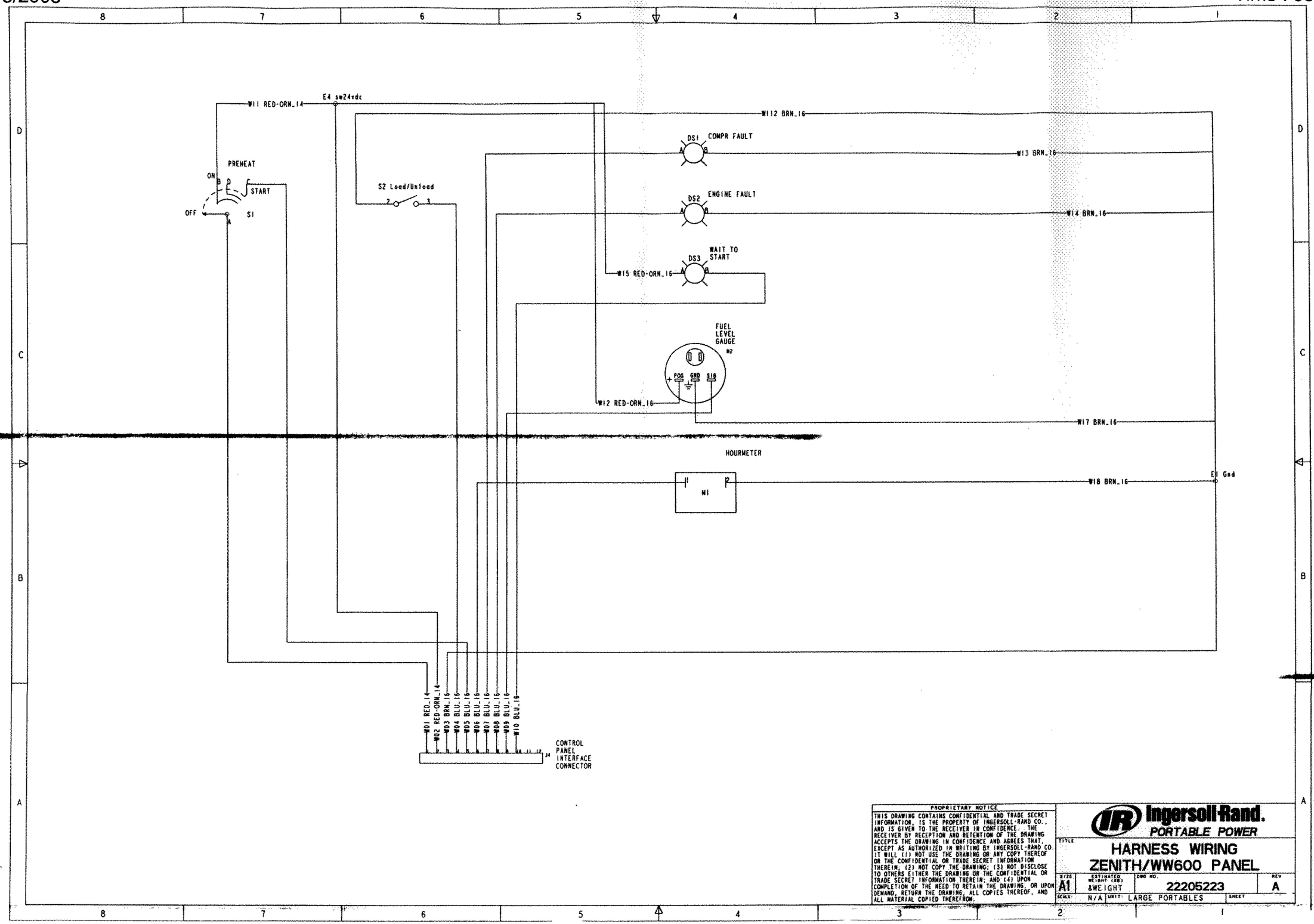

PROPRIETARY NOTICE
THIS DRAWING CONTAINS CONFIDENTIAL AND TRADE SECRET INFORMATION, IS THE PROPERTY OF INGERSOLL-RAND CO., AND IS GIVEN TO THE RECEIVER IN CONFIDENCE. THE RECEIVER BY RECEPTION AND RETENTION OF THE DRAWING ACCEPTS THE DRAWING IN CONFIDENCE AND AGREES THAT, EXCEPT AS AUTHORIZED IN WRITING BY INGERSOLL-RAND CO. IT WILL (1) NOT USE THE DRAWING OR ANY COPY THEREOF OR THE CONFIDENTIAL OR TRADE SECRET INFORMATION THEREIN; (2) NOT COPY THE DRAWING; (3) NOT DISCLOSE TO OTHERS EITHER THE DRAWING OR THE CONFIDENTIAL OR TRADE SECRET INFORMATION THEREIN; AND (4) UPON COMPLETION OF THE NEED TO RETAIN THE DRAWING, OR UPON DEMAND, RETURN THE DRAWING, ALL COPIES THEREOF, AND ALL MATERIAL COPIED THEREFROM.

Ingersoll-Rand. PORTABLE POWER

TITLE: HARNESS WIRING ZENITH/WW600 PANEL

SIZE	ESTIMATED WEIGHT (KG)	DWG NO.	REV
A1	&WEIGHT	22205223	A

SCALE: N/A UNIT: LARGE PORTABLES SHEET

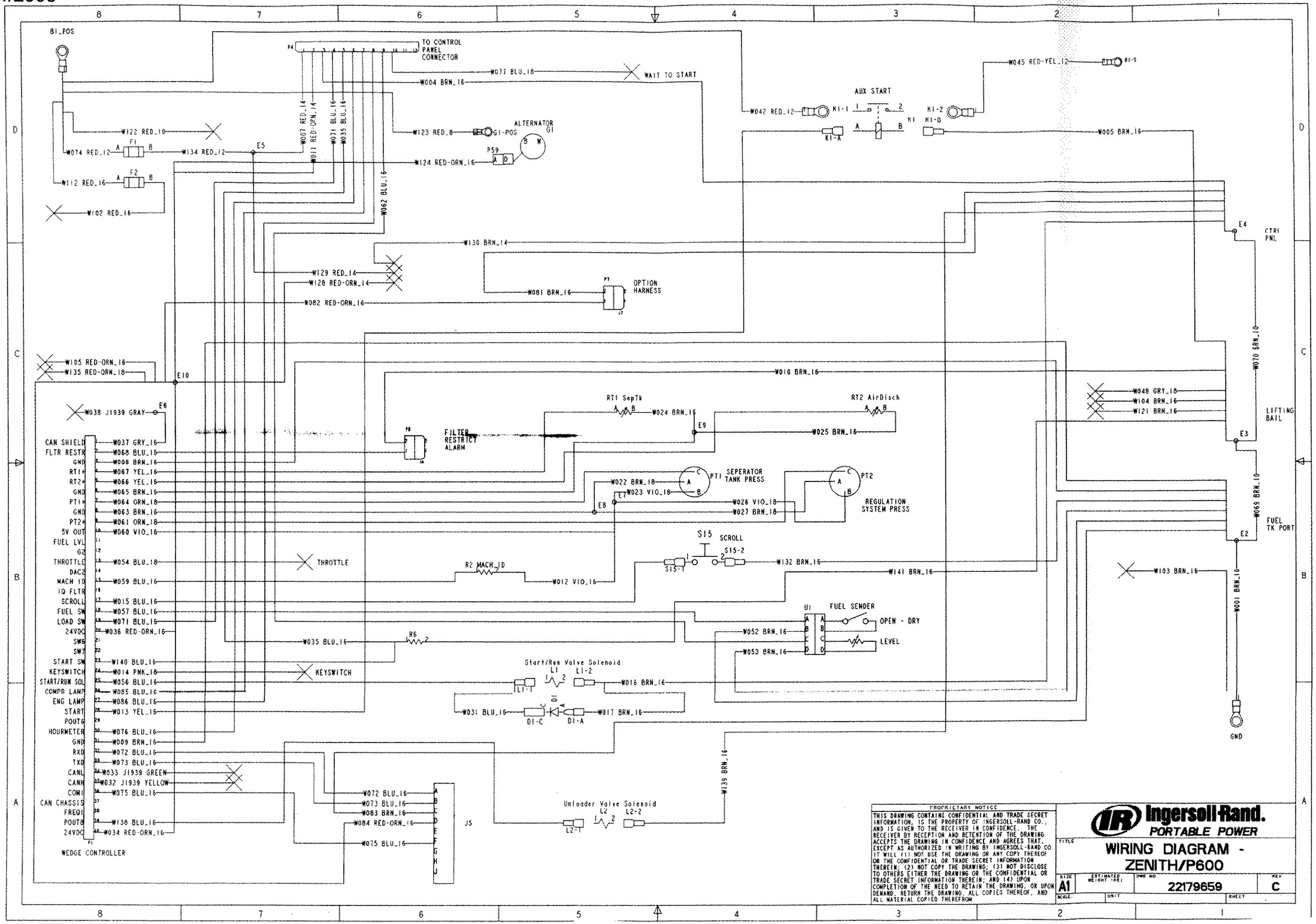

PROPRIETARY NOTICE
THIS DRAWING CONTAINS CONFIDENTIAL AND TRADE SECRET INFORMATION, IS THE PROPERTY OF INGERSOLL-RAND CO., AND IS GIVEN TO THE RECEIVER IN CONFIDENCE. THE RECEIVER BY RECEPTION AND RETENTION OF THE DRAWING ACCEPTS THE DRAWING IN CONFIDENCE AND AGREES THAT, EXCEPT AS AUTHORIZED IN WRITING BY INGERSOLL-RAND CO. IT WILL (1) NOT USE THE DRAWING OR ANY COPY THEREOF OR THE CONFIDENTIAL OR TRADE SECRET INFORMATION THEREIN; (2) NOT COPY THE DRAWING; (3) NOT DISCLOSE TO OTHERS EITHER THE DRAWING OR THE CONFIDENTIAL OR TRADE SECRET INFORMATION THEREIN; AND (4) UPON COMPLETION OF THE NEED TO RETAIN THE DRAWING, OR UPON DEMAND, RETURN THE DRAWING, ALL COPIES THEREOF, AND ALL MATERIAL COPIED THEREFROM

Ingersoll-Rand. PORTABLE POWER

TITLE: WIRING DIAGRAM - ZENITH/P600

SIZE	ESTIMATED WEIGHT (KG)	DWG NO	REV
A1		22179659	C
SCALE	UNIT		SHEET

SECTION 6

ELECTRONIC COMPONENT LOCATION DRAWINGS (not available)

HARNESS CONNECTOR LOCATIONS

J1:	Located on WEDGE controller
J50:	30 pin connector located on engine electronic control unit (ECU)
P4:	12 pin connector located at back of control panel box
P6:	3 pin connector for termination resistor on CAN backbone near engine electronic control unit (ECU)
J57:	9 pin connector for engine datalink service, located near engine control unit (ECU)
P11:	3 pin connector for termination resistor on CAN backbone near WEDGE controller
J5:	9 pin connector for WEDGE RS232 communications, located at WEDGE controller
P7:	2 pin connector for option harness located behind control panel

SECTION 7

INDIVIDUAL CIRCUIT DIAGRAMS

ENGINE START CIRCUIT

CHART A1

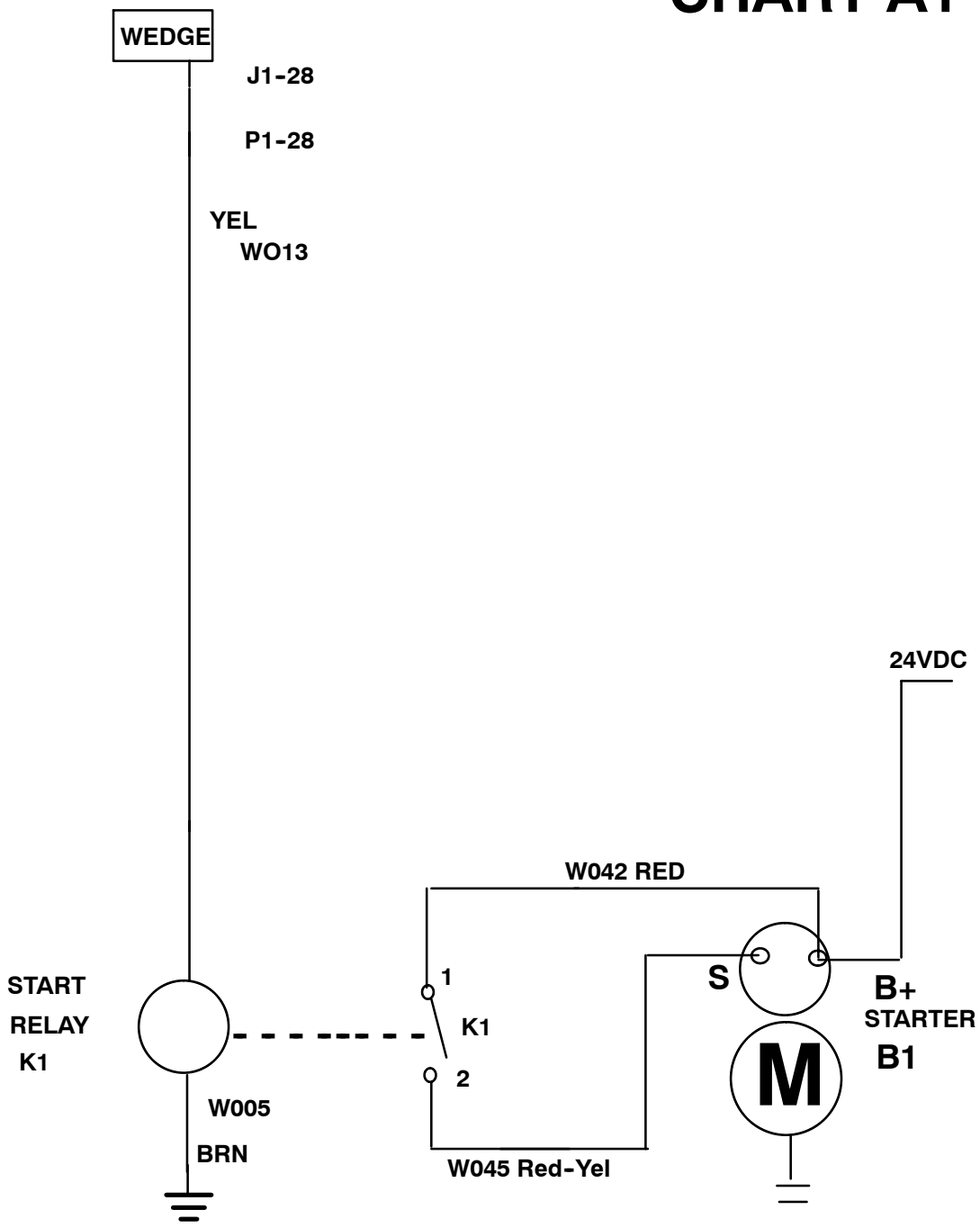

V1.5

CIRCUIT DESCRIPTION

The WEDGE drives the engine starter through the auxiliary start relay, K1.

K1 is mounted on the lifting rail near the engine.

K1 has a single set of contacts that connect to the starter solenoid.

The control signal leaving the WEDGE on J1-28 passes through the W1 harness and through a jumper plug. The jumper plug is replaced with an ESTOP switch for ESA versions.

CIRCUIT TROUBLESHOOTING

If the starter will not engage during a crank cycle, check the voltage at the coil of K1 during the crank cycle. It should be 14-22VDC. If voltage is not at K1, check for voltage back through the ESTOP jumper and to the WEDGE.

If voltage is at K1 coil, verify voltage is sent to the starter solenoid by K1 contact.

Voltage available at the starter solenoid during a no-crank condition indicates a starter problem.

FUEL SENDER CIRCUIT

CHART B1

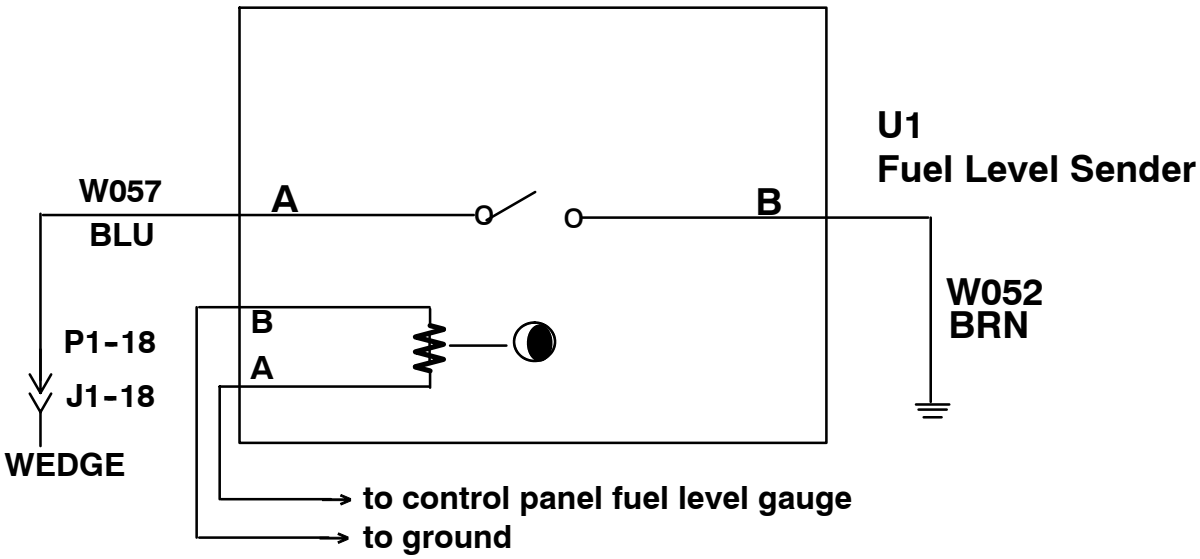

CIRCUIT DESCRIPTION

The fuel sender is a resistive device that sends a 10-180 ohm signal to the fuel gauge indicating fuel level. It also contains a switch, for low fuel level that will shutdown the machine when the fuel reaches this level. This switch input connects to the WEDGE controller.

CIRCUIT TROUBLESHOOTING

If the fuel reading appears incorrect, check the fuel level in the tanks to see if it corresponds with the gauge. If not, remove the fuel sender and disconnect the harness plug. Connect an ohmeter across terminals A and B on the Packard Weather-Pack connector. Tilting the sender tube should produce resistance reading between 10 and 180 ohms. If not, replace the sender.

The Level switch can be checked with the sender removed from the tank. Use an ohmeter to verify switch operation. Tilting the sender tube back and forth should activate the switch.

RT1 SEPARATOR TANK TEMPERATURE CIRCUIT

CHART C1

Temp°C	Temp°F	Resistance (Ohms)
-20	-4	25,490
-10	14	18,088
-5	23	12,221
0	32	9,369
5	41	7,240
15	59	4,427
25	77	2,786
40	104	1460
60	140	668.7
70	158	467.2
90	194	241.0
100	212	177.5
105	221	153.1
110	230	132.8

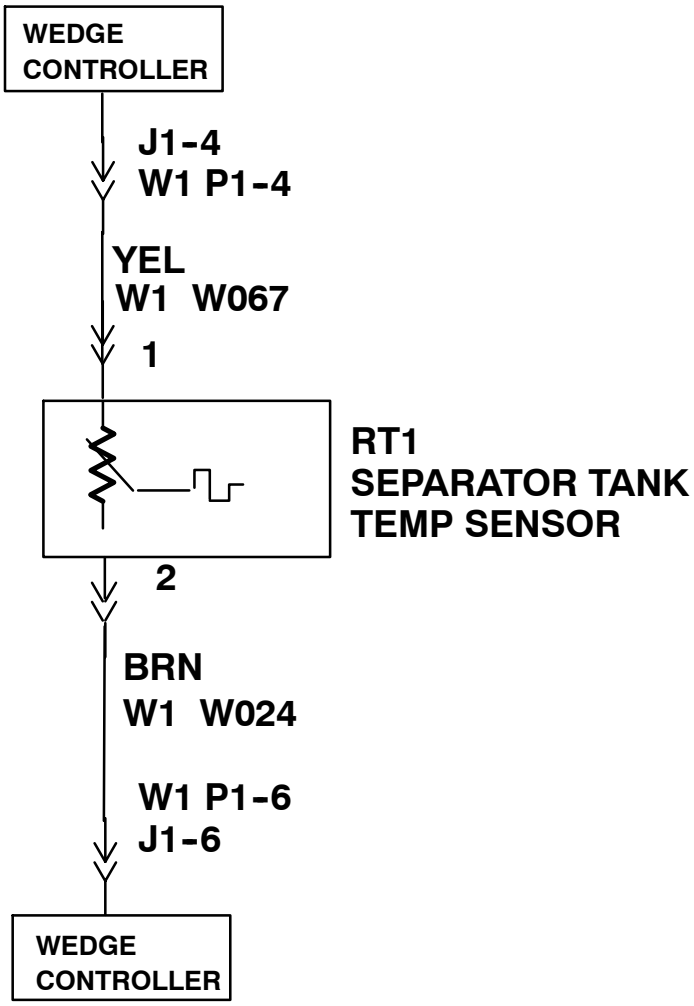

CIRCUIT DESCRIPTION

Separator tank temperature is read by RT1 thermistor. It is mounted in the side of the separator tank and connects to the W1 harness. The temperature range is -30 to 255°F.

CIRCUIT TROUBLESHOOTING

If the WEDGE Controller has an incorrect reading for the RT1 channel, disconnect the thermistor and install the Thermistor Simulator Plug (IR# 22073878) into the harness connector. Read the channel again and it should read 32 degrees F ± 5 degrees (0C ± 3C). If the reading is correct, replace the thermistor. If not, disconnect the WEDGE Controller P1 connector. Connect an ohmmeter between pins P1-4 and P1-6. The ohmmeter should read 33.2K ohms ±1%. If the reading is correct, replace the WEDGE Controller. If not, there is a problem with the W1 harness or the P1-4, P1-6 connector pins.

RT2 AIREND DISCHARGE TEMP

CHART D1

Temp°C	Temp°F	Resistance (Ohms)
-20	-4	25,490
-10	14	18,088
-5	23	12,221
0	32	9,369
5	41	7,240
15	59	4,427
25	77	2,786
40	104	1460
60	140	668.7
70	158	467.2
90	194	241.0
100	212	177.5
105	221	153.1
110	230	132.8

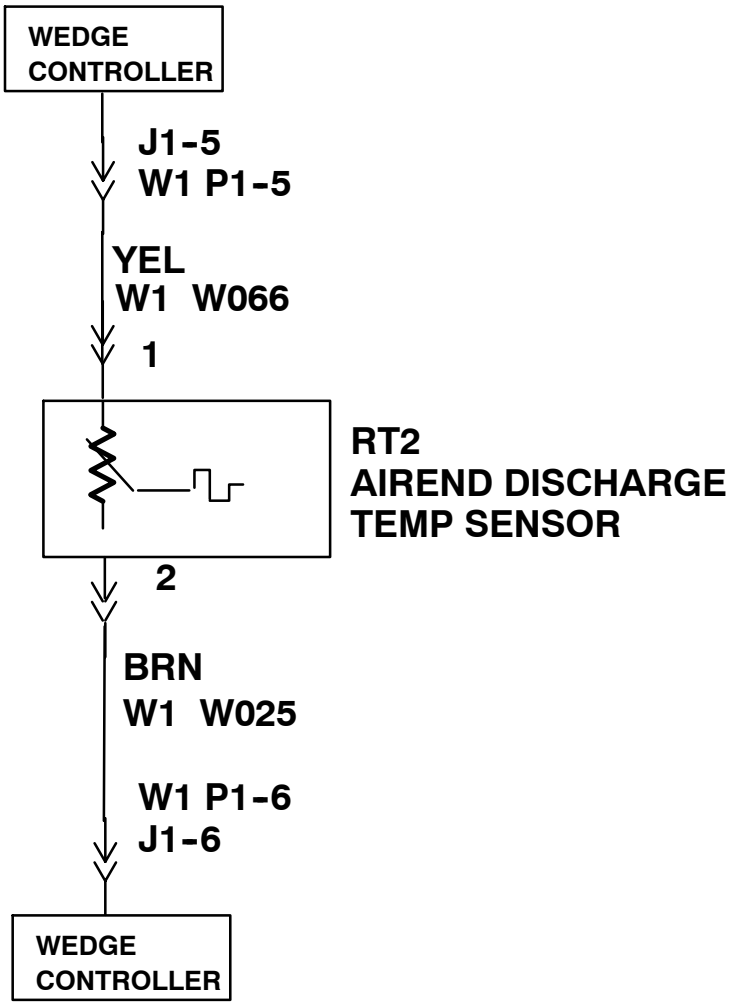

CIRCUIT DESCRIPTION

Airend discharge temperature is read by RT2 thermistor. It is mounted in the airend discharge piping and connects to the W1 harness. The temperature range is -30 to 255°F.

CIRCUIT TROUBLESHOOTING

If the WEDGE Controller has an incorrect reading for the RT2 channel, disconnect the thermistor and install the Thermistor Simulator Plug (IR# 22073878) into the harness connector. Read the channel again and it should read 32 degrees F ± 5 degrees (0C ± 3C). If the reading is correct, replace the thermistor. If not, disconnect the WEDGE Controller P1 connector. Connect an ohmmeter between pins P1-5 and P1-6. The ohmmeter should read 33.2K ohms ±1%. If the reading is correct, replace the WEDGE Controller. If not, there is a problem with the W1 harness or the P1-5, P1-6 connector pins.

PT1 SEPARATOR TANK PRESSURE CIRCUIT

CHART E1

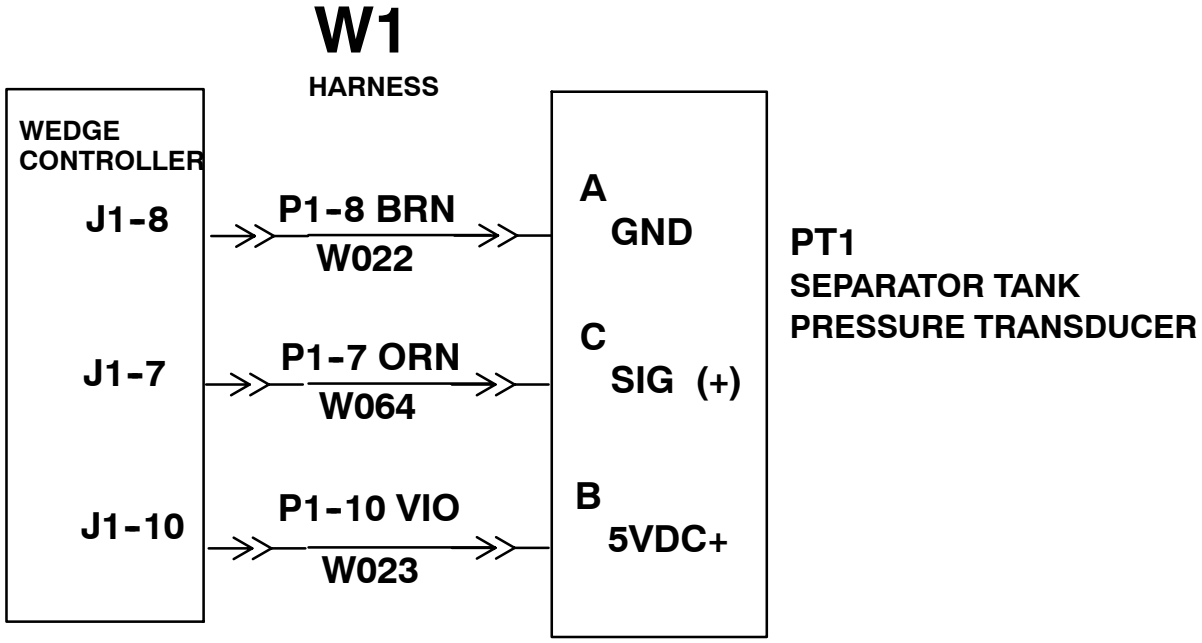

CIRCUIT DESCRIPTION

The WEDGE reads separator tank pressure from PT1. It is a gauge pressure transducer mounted on the separator tank. The WEDGE provides 5 VDC excitation voltage to pin B (+5) and pin A (GND). The pressure signal on pin C connects to the WEDGE input. The signal range is .45 to 4.5 volts. The transducer range is 0 to 225 psig.

CIRCUIT TROUBLESHOOTING

To verify the operation of PT1, connect a gauge in parallel with it. The test gauge should be at least 1% accuracy to match the accuracy of PT1. Use the WEDGE diagnostics to display the readings of PT1. If PT1 does not track the test gauge, replace it.

PT2 REGULATION SYSTEM PRESSURE CIRCUIT

CHART F1

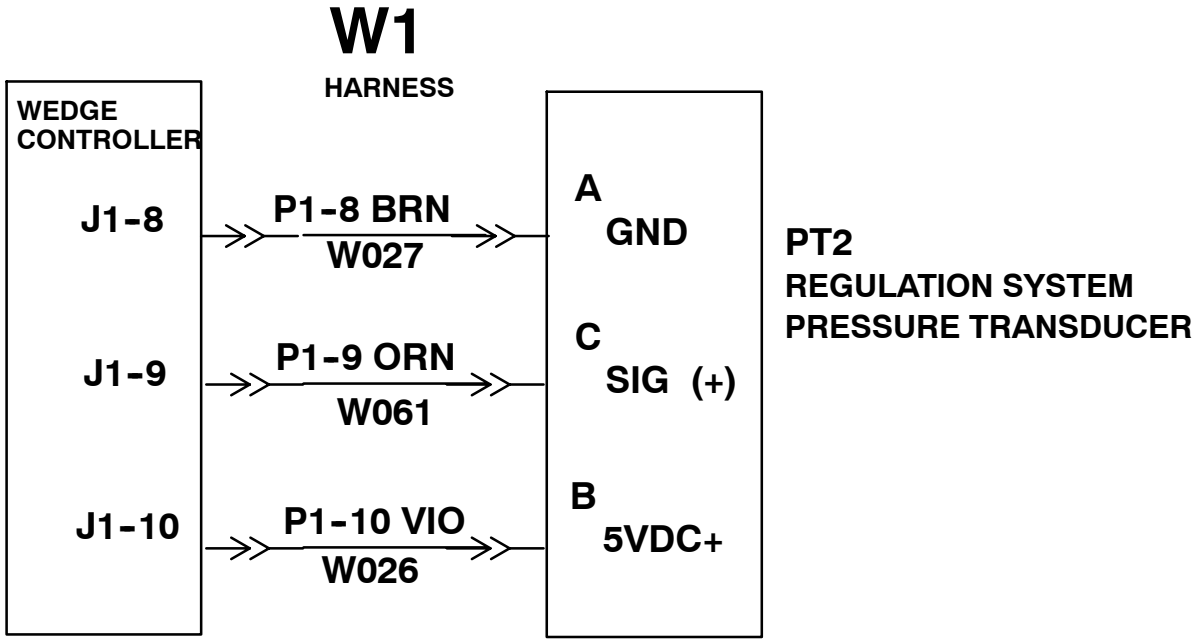

CIRCUIT DESCRIPTION

The WEDGE reads regulation system pressure from PT2. It is a gauge pressure transducer mounted near the inlet unloader. The WEDGE controller provides 5 VDC excitation voltage to pin B (+5) and pin A (GND). The pressure signal on pin C connects to the WEDGE input. The signal range is .45 to 4.5 volts. The transducer range is 0 to 100 psig.

CIRCUIT TROUBLESHOOTING

To check the operation of PT2, connect a gauge in parallel with it. The test gauge should be at least 1% accuracy to match the accuracy of PT2. Use the WEDGE diagnostics to display the readings of PT2. If PT2 does not track the test gauge, replace it.

S10, S11 AIR FILTER SWITCHES

CHART I1

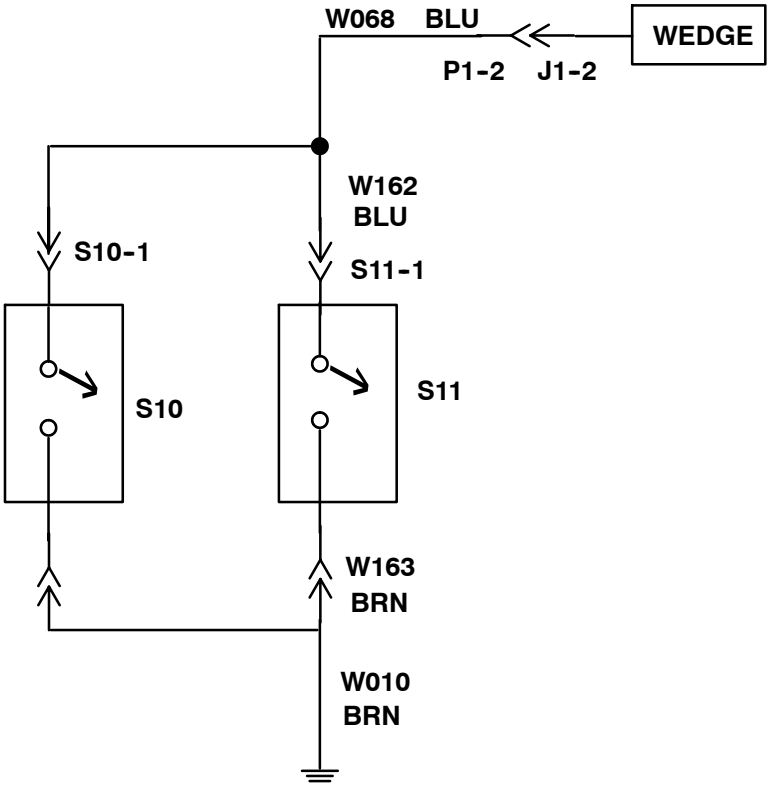

CIRCUIT DESCRIPTION

The WEDGE reads the air filter switches, S10 and S11. S10 is connected to the compressor air filter and S11 is connected to the engine air filter. These are normally open switches and close when the air filter restriction reaches 20 inches of water. The switches provide a ground connection to an opto coupler input on the WEDGE controller.

CIRCUIT TROUBLESHOOTING

To verify the circuit operation, another type of switch can be substituted for the filter switch, or a wire jumper can be used to activate the circuit. Disconnect S10 and S11 and install the test switch or jumper. Closing the test switch or installing the jumper should activate the circuit, and the “Air Filter” alarm light on the control panel should light. Forcing the alarm lamp to turn on and off will verify proper circuit operation.

R2 MACHINE ID PLUG

CHART J1

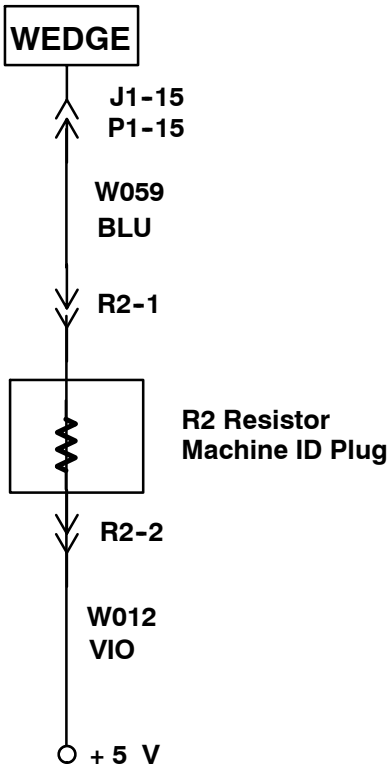

CIRCUIT DESCRIPTION

Only software versions prior to V1.60 use the Machine ID Plug.

The machine ID plug is used to indicate to the WEDGE controller which type of machine is connected. The plug consists of a resistor and is connected to one of the WEDGE analog inputs. The resistor plugs are color coded for easy identification. Refer to table below for color codes. The WEDGE reads the ID plug at power up. If it cannot read the plug or reads an invalid voltage, a shutdown will be issued with fault code 51.

The ID plug can be removed and checked with an ohmeter. The table below lists the resistance values associated with various machines.

ID Plug Color	Resistance Ω	Machine Model	P/N
Grey	45300	P425	22201354
White	24300 Ω	P600	22201362

SECTION 8

ELECTRICAL CONNECTOR INFORMATION

CONNECTOR PARTS INFORMATION

The following is a list of the connector parts used with the harnesses and devices on various machine models. Most connectors consist of 1 to 4 items per side (harness or device). The devices can be located on the schematics and then referenced to this list. A connector repair kit, I-R P/N 54749635, containing terminals and housings, is available for repairs.

Part	Manufacturer	Part Number
Thermistor Connector: (RT1, RT2)		
Harness Socket Terminal	Packard	
Harness Housing	Packard	
Pressure Transducers: (PT1 - PT2)		
Harness Female Terminal	Packard Metri-Pack	54750500
Harness Housing	Packard Metri-Pack	54750518
Fuel Level Sender: (U1)		
Harness Female Terminal	Packard Weather Pack	54750526
Harness Housing	Packard Weather Pack	
Sensor male Terminal	Packard Weather Pack	54750542
Sensor Housing	Packard Weather Pack	
Cable Seal	Packard Weather Pack	54750567
WEDGE Serial Port / Engine Diagnostic Port: J8		
Harness Pins	Packard	
J1939 CAN Cable:		
Harness Socket	Deutsch	54699566
Harness Housing	Deutsch	54750633

REMOVAL TOOL USAGE

Terminal Part Number	Manufacturer	Removal Tool No.	Manufacturer Crimp Tool No.
54699541	Deutsch	54699632	22216667
54699558		54699632	22216667
54699582		54699640	22216675
54699590		54699640	22216675
54750500	Packard Metri-Pack	54749643	12155975
54750674		54749643	12155975
54750526	Packard Weather Pack	54729660	12155975
54750542		54729660	12155975
54699525	Deutsch	54699624	22216667
54699509		54699616	22216667
54699533		54699624	22216667
54699566		54699632	22216667

Deutsch DT Series Connector (Note the orange wedgelock)	
Packard Metri Pack Series Connector (Note the green wire seals and blue Terminal Position Assurance Connection)	
Deutsch HD Series Connector	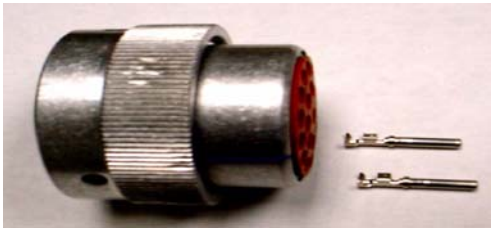
Deutsch DRC Series Connector It is very important that connectors be properly assembled. Use of the correct pin crimp tool is required to ensure high quality terminations. The manufacturer's instructions must be followed as to selection and use of crimp tools. Improper crimps not only provide unreliable connections but can damage the connector housing. Troubleshooting Harnesses – For extensive harness troubleshooting, a detailed schematic will be required. Splice location details can be very useful since problems do occur at splices. The proper test adapters are recommended for harness troubleshooting. Some examples of these are shown in Section 2 concerning multimeters. Use of these adapters will prevent harness damage during testing. The first item to perform during harness troubleshooting is a physical inspection of the harness for damage. Look for cut or frayed conductors, melted insulation and conductors pulled from connectors. The next item to check is connector pin seating. Ensure the connector pins in the circuit under test are properly seated in the connector housing. A tug on the wire should confirm this. If the harness is not physically damaged and all connector pins are seated, perform a continuity check of the circuit conductors. The ohmeter function of the multimeter can be used for this test.	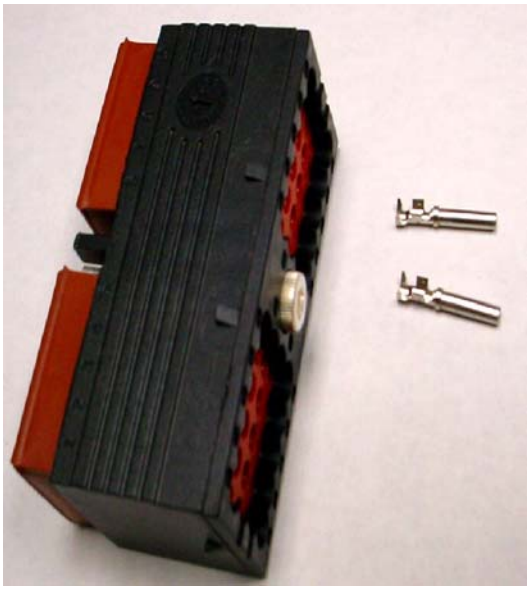 Check to ensure there are not any ground faults or conductor shorts to ground. Finally, measure the signals on the circuit under test. Start at the point of origin of the signal and verify at as many points along the harness as possible, ending at the termination point.

Use of Harness Tools

These pictures describe the proper methods of use of harness tools.

Proper removal tool usage is shown in the above picture. The removal tools are color coded as to wire size. The Table below lists the colors and wire sizes.

Removal Tool Color	Wire Size	IR P/N
Red	20-24	54699640
Blue	16-18	54699632
Yellow	12-15	54699624
Green	8-10	54699616

The wire is placed into the slot on the removal tool and the tool is slid along the wire inserted into the back of the connector. Gently pull on the wire as the tool is pushed into the connector. The pin should release from the connector. To insert a pin, push it into the connector until it locks.

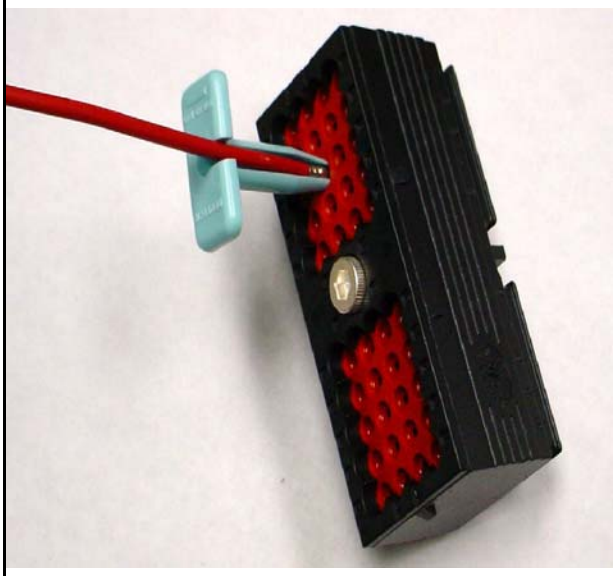

Removal Tools

This picture shows the various removal tools for the Deutsch connectors.

The following two pages will show how the Deutsch crimp tools are to be used. One is used for machined contacts and the other for stamped and formed contacts.



ASSEMBLY INSTRUCTIONS

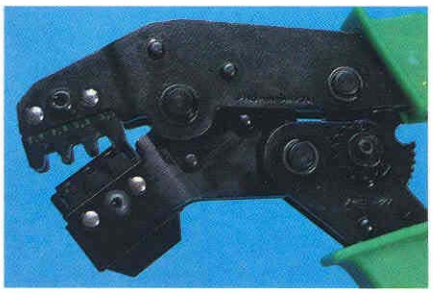

1. Cycle the hand tool to the open position.

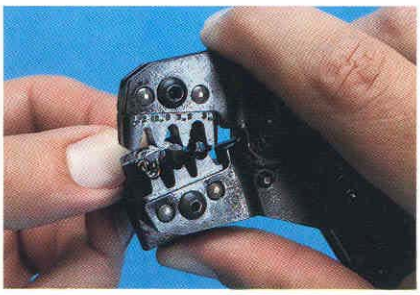

2. While pressing upward on the locator spring, insert the contact with the tails upward completely into the locator.

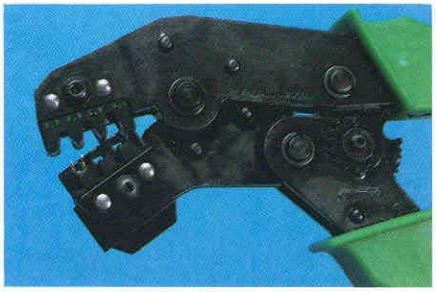

3. When correctly positioned, the contact should be located beyond flush with the edge of the hand tool and positioned on the concave polished split level crimp areas.

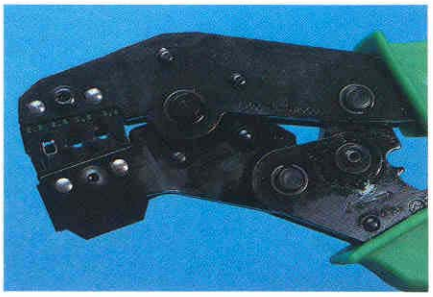

4. Partially (usually the first click) cycle the hand tool assuring that the upward thrusting tails of the contact has started engaging with the top jaw of the took. (There is a slight tendency for the contact to roll out of vertical alignment.)

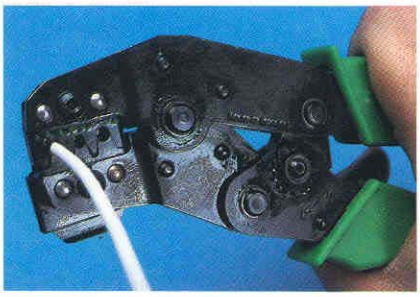

5. Insert the prestripped wire into the crimp area of the contact and completely cycle the tool.

Recommended strip length .175 ± .O25.



6. While pressing upward on the locator spring withdraw the crimped termination.

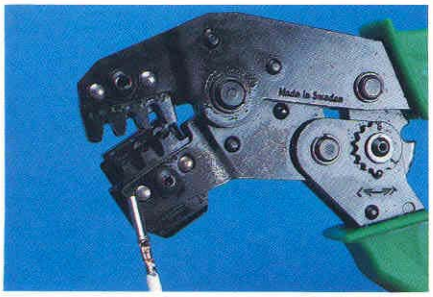

7. The result will be a perfect termination.

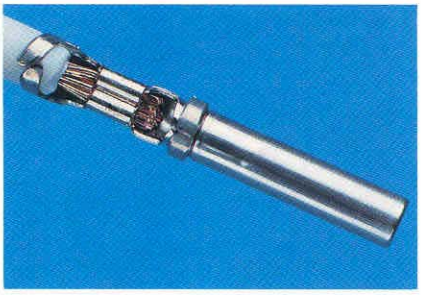

8. Note that there are no unterminated wire strands, and that some strand ends can be seen at the forward edge of the crimp. Also note the insulatin is gripped by the smaller secondary crimp. Distortion is at a minimum.

Crimping Procedure
(HDT-48-00)

1) Strip (see recommended strip lengths) insulation from wire.

2) Raise selector knob and rotate until arrow is aligned with wire size to be crimped.

3) Loosen lock nut, turn adjusting screw in until it stops.

4) Insert contact, turn adjusting screw counter clockwise out until contact is flush with indentor cover. Tighten lock nut.

5) Insert wire in contact, contact must be centered between indicators, close handles until handle contacts the stop.

6) Release handles and remove crimped contact.

7) Inspect terminal to insure that all strands are in crimp barrel.

NOTE: Tool must be readjusted for each type/size of contact.



1)
2)
3)

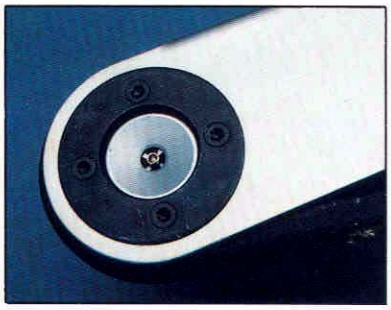
4)

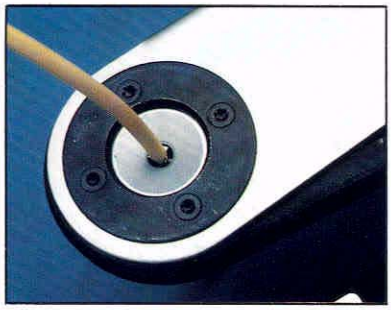
5)
6)

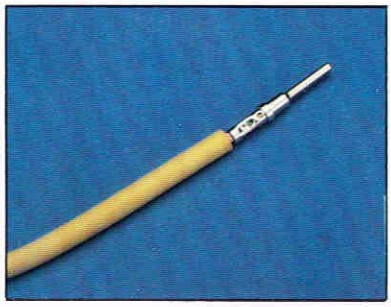
7)

Wire Termination

Do's and Don'ts

Do's

- Check strip lengths.
- Protect wire strands.
- Gauge the crimp indenters.
- Check crimp selector for correct wire size settings.
- Check air pressure on semi- and automatic crimp equipment.
- Tensile pull test.
- Specify Deutsch manufactured terminals.
- Check crimp locations.

Don'ts

- Add solder.
- Apply heat.
- Leave exposed conductor wire strands.
- Overcrimp.
- Rely on T-Dim measurments only.
- Use "Field-Maintenance" crimp tools for volume production.
- Buy bogus terminals.



The 9-pin circular connectors are used for engine ECU and WEDGE Controller communications.

Circular connectors J5 and J8 pinout. J5 is located near the Wedge Controller and J8 is located near the engine controller. The pinout of these connectors is the same, however, they are keyed differently.

(View from front side, non-wire side)

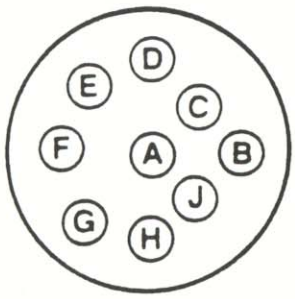

SECTION 9

ELECTRICAL PARTS LIST

ELECTRICAL PARTS LIST

Ref Designator	Description	Part Number
PT1	Sep. Tank Pressure Xducer	54496773
PT2	Reg. Pressure Xducer	36920825
RT1, RT2	Temperature Sensor	36898922
L1	Start/Run Solenoid	36840841
K1, K2	SPST Relay	36853521
	Engine Ground Strap	35578194
U1	Fuel Level Sender	54731427
	WEDGE Controller	22173579
W1	Chassis Harness	22199061
F1	ATC 20 AMP Fuse	36792083
F2	ATC 10 AMP Fuse	22071591
S15	Diagnostic Switch	54475777
D1	Diode	35376169
R2	Machine ID Plug	22201354 (P425)
		22201362 (P600)

SECTION 10

ALERTS AND SHUTDOWNS LIST

ALERT/SHUTDOWN CONDITIONS

Version: 2.15

	ALERT			SHUTDOWN			
	CODE	LIGHT (BLINKS)	Machine ID	CODE	LIGHT (STEADY)	DELAY (sec)	Machine ID
Engine Speed < Min. RPM				1	CPRSR Malf	30	All[3]
Engine Speed > Max. RPM				2	CPRSR Malf	30	All[4]
Engine Crank Time Exceeded				3	CPRSR Malf	0	All[1]
Engine Oil Temperature > 252 deg. F	5	CPRSR Malf.	0-6				
Intake Manifold Temperature > 180 deg. F	6	CPRSR Malf.	0-7				
Water In Fuel	8	CPRSR Malf.	5,6				
Engine Not Responding to Throttle Cmd.	10	CPRSR Malf.	All				
Too Many Start Attempts during Autostart				11	CPRSR Malf	0	All
Engine Shuts Itself Down: reason unknown				29	CPRSR Malf	0	All
Low AE Oil Pressure				31	CPRSR Malf	20	0,2,5
Disch. Temp (RT2) Sensor Fault				32	CPRSR Malf	10	All
Separator Tank (PT1) Sensor Fault	33	CPRSR Malf.	All				
Separator Tank Pressure >20 PSI during start attempt (Engine will not crank)				34	CPRSR Malf	0	0-10
Machine Over Pressure				35	CPRSR Malf	1	0-6
Safety Valve Open				36	CPRSR Malf	2	0-6
Sep. Tank Temp > 247 degrees F				50	CPRSR Malf	3	All
Machine ID Not Valid				51	CPRSR Malf	0	All
Sep. Tank Temp. (Rt1) Sensor Fault				53	CPRSR Malf	10	All
Reg. System Pressure (PT2) Sensor Fault	54	CPRSR Malf.	All				
Estop Button Pushed	55	CPRSR Malf.	0-6	55	CPRSR Malf	3	0-6
Minimum Pressure Not Met	56	CPRSR Malf.	All				
Serial Comm. Problem	70	CPRSR Malf.	All				
CAN Bus Problem	71	CPRSR Malf.	All				
Auto Start/Stop Module Failure - No Comm for 17 seconds	73	CPRSR Malf.	All				
Dedicated Lights:							
Low Fuel Level		Fuel Level	0-6		Fuel Level	3	All
Air Filter Restriction		Soiled Filter	All[6]				
Low Battery Voltage		Battery Charging Condition	All				
Engine Oil Pressure < 18 PSI		Low Engine Oil Pressure	All				
Low Coolant Level		Engine Coolant Level	0,1,5, 6[5]				
Engine Coolant Temp > = 220 deg F.		High Engine Temp	All				
Engine Coolant Temp > = 230 deg F.					High Engine Temp	10	All
IQ Filter Restriction					IQ Filter Re-striction	3	0-6[2]
High Discharge Temp. (RT2 > 247 deg. F)					High Comp. Temp.	3	All

CAN Derived Data =

Notes:

1) Max. crank time 0-6 = 15 sec; 7,8 = 30 sec.

2) IQ equipped machines

3) ID 0-6 = 800 RPM; 7,8 = 900

4) ID 0-6 = 1900 RPM; 7,8 = 2500

5) Via fault code 235

6) ID 7,8 Option

Machine ID:

0 = Viking HP CU

1 = Viking XHP CU

2 = EMU LP CAT

3 = EMU HP CAT

4 = Viking XHP CAT

5 = EMU LP CU

6 = EMU HP CU

7 = Zenith P425

8 = WW600

9 = C15 CAT 150 psi

10 = TRITON C U 8 L 1 5 0 / 2 5 0

11 = Tier III Zenith 375, 425

12 = Tier III WW600

IR ENGINE FAULT CODES

Fault Code	Description
29	Analog Throttle (A) Input
94	Fuel Pressure Sensor Voltage
100	Engine Oil Pressure
102	Boost Pressure Sensor Voltage
105	Manifold Air Temperature
108	Barometric Pressure Invalid
110	Engine Coolant Temperature
111	Loss of Coolant Temperature
157	Injector Metering Rail Pressure
158	ECU Power Down Error
174	Fuel Temperature
611	Injector Voltage Hi/Lo
629	ECU Error
636	CAM Position Sensor Current Hi/Lo
637	Crank Position Circuit
1136	ECU Temperature Hi
1172	Turbo Inlet Temperature Sensor Voltage Hi/Lo
1347	Fuel Pump/Filter
2630	Charge Air Cooler Temperature Sensor Voltage Hi/Lo

SECTION 11

RECOMMENDED SPARE PARTS

Quantity	Description	Part Number
1	WEDGE Controller	22173579
2	Thermistor Temperature Probe	36898922
3	0-100 psig Pres Transducer	36920825
3	0-225 psig Pres Transducer	54496773

SECTION 12

INGERSOLL-RAND ENGINE INFORMATION

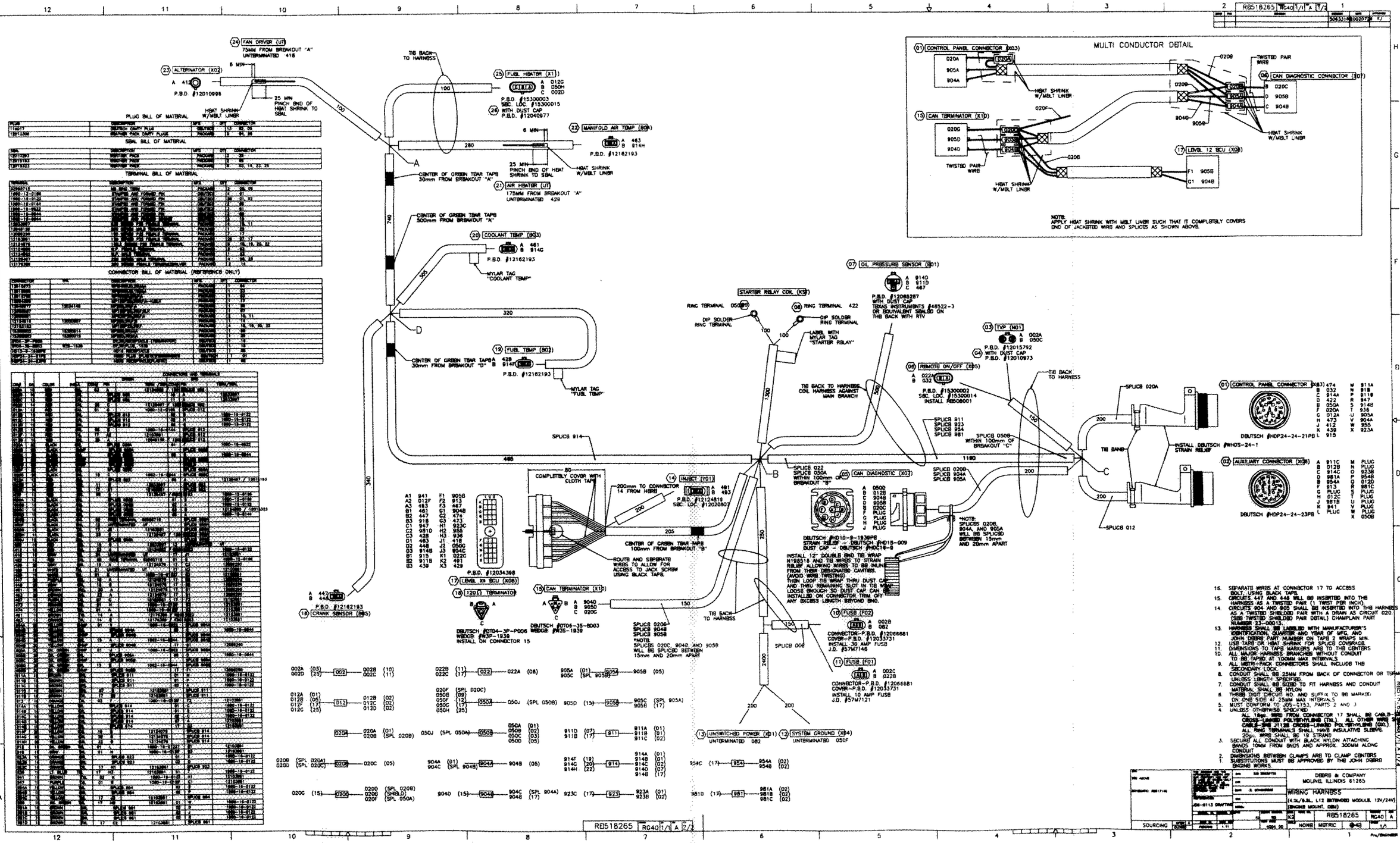
MULTI CONDUCTOR DETAIL
PLUG BILL OF MATERIAL
SEAL BILL OF MATERIAL
TERMINAL BILL OF MATERIAL
CONNECTOR BILL OF MATERIAL (REFERENCE ONLY)
CONNECTORS AND TERMINALS
DEERE & COMPANY
MOLINE, ILLINOIS 61265
WIRING HARNESS
(4.5L/6.8L, L12 EXTENDED MODULE, 12V/24V)
(ENGINE MOUNT, OEM)
RB518265
RG40
NONE
METRIC



Doosan Infracore
Portable Power



Doosan Infracore Portable Power
P.O. Box 868 - 501 Sanford Ave
Mocksville, N.C. 27028
www.doosanportablepower.com

Book: 23227143 (01/08) Rev A

©2008 Doosan Infracore International, Printed in the USA