AT Command Manual
For ZTE Corporation's MG2639_V2 Module

Version: V2.0

ZTE CORPORATION

Copyright Statement

Copyright © 2011 by ZTE Corporation

All rights reserved.

No part of this publication may be excerpted, reproduced, translated or utilized in any form or by any means, electronic or mechanical, including photocopying and microfilm, without the prior written permission of ZTE Corporation.

is the registered trademark of ZTE Corporation. All other trademarks appeared in this manual are owned by the relevant companies.

ZTE Corporation reserves the right to make modifications on print errors or update specifications in this manual without prior notice.

ZTE Corporation keeps the right to make the final explanation to this manual.

With strong technical force, ZTE Corporation can provide CDMA/GPRS module customers with the following all-around technical support:

1. Provide complete technical documentation;

2. Provide the development board used for R&D, test, production, after-sales, etc.

3. Provide evaluations and technical diagnosis for principle diagram, PCB, test scenarios;

4. Provide test environment;

ZTE Corporation provides customers with onsite supports, and also you could get supports through telephone, website, instant communication, E-mail, etc.

The module website module.ztemt.com.cn provides the relevant industry information and module technical documentation. The authorized module customers could download the latest technical documentation from our website. If you have more requirements, you could send an E-mail to module@zte.com.cn. You can also call us at 0755-86360280 for technical support.

Preface

Target Readers

This manual is mainly applicable for the following engineers:

- System designing engineers
- Hardware engineers
- Software engineers
- Test engineers

Update History

- **V1.1**
  Completely follow MG2636 AT command Set user manual.

- **V1.2**
  Completely follow ME3000_V2 AT command Set user manual.

- **V1.3**
  Modify the previous documents and make them further standardized;
  Delete Relay station Command and Transparent transmission Command;
- **V1.4**
  1. Modify the previous documents and make them further standardized;
  2. Add FTP command;
- **V1.5**
  1. Modify the previous documents and make them further standardized;
  2. Add transparent transfer command.
- **V1.6**
  1. Modify the previous documents and make them further standardized;
- **V1.8**
  1. Modify the previous documents and make them further standardized;

Contents

1 General Description 8
1.1 Description of AT Commands 8
1.1.1 Type of AT Commands 8
1.1.2 Returned Syntax of AT Commands 8
1.1.3 AT Command Syntax 8
1.2 Abbreviations 9
2 AT Commands 12
2.1 Common Commands 12
2.1.1 A/: repeat 12
2.1.2 ATA: answer 12
2.1.3 ATD: dial 12
2.1.4 ATDL: dial last 13
2.1.5 ATE: enable 13
2.1.6 ATH: hang up 13
2.1.7 ATI: Information 14
2.1.8 ATQ: set whether or not to display the returned value 14
2.1.9 +++: switch from data mode to command mode 14
2.1.10 ATO: switch from command mode to data mode 14
2.1.11 ATP: pulse 15
2.1.12 ATS0: auto answer setting 15
2.1.13 +CRC: set ringer type 15
2.1.14 +CLVL: volume level 16
2.1.15 +CLIP: Calling Line Identification Presentation 16
2.1.16 +ZSETMUTE: mute control 17
2.1.17 +CIMI: International Mobile Identification 17
2.1.18 +CGMR: get product version 17
2.1.19 +ECHO: echo remove 17
2.1.20 +(C)GSN: get current IMEI 18
2.1.21 +ZVERS: get current software version 18
2.1.22 +CLCK: lock 18
2.1.23 +CCFC: call forwarding number and conditions 19
2.1.24 +CCWA: call waiting 21
2.1.25 +CHLD: call hold 21
2.1.26 *TSIMINS: check SIM card status 22
2.1.27 +CPWD: change password 23
2.1.28 +CGMI: inquire manufacturer's information 23
2.1.29 ATZ: reset 23
2.1.30 +CSCS: character set selection 23
2.1.31 +CLCC: check call status 24
2.2 25
2.3 DTMF Command 26

2.3.1 +VTS: send DTMF . . . 26
2.4 Network Service Command . . . 27
2.4.1 +CREG: network registration and roaming . . . 27
2.4.2 +COPS: network selection . . . 27
2.5 Mobile Device Control and Status Report . . . 29
2.5.1 +CPAS: check module's status . . . 29
2.5.2 +CFUN: set module's function . . . 29
2.5.3 +CMEE: mobile equipment errors . . . 29
2.5.4 +ZPWROFF: power off . . . 30
2.5.5 +CPIN: input PIN . . . 30
2.5.6 +CSQ: check signal strength . . . 30
2.5.7 +CCLK: clock management . . . 31
2.6 Message Service Command . . . 32
2.6.1 +CSCA: SMS center number . . . 32
2.6.2 +CNMA: message acknowledgement . . . 32
2.6.3 +CMGF: SMS mode . . . 32
2.6.4 +CNMI: message indication . . . 33
2.6.5 +CMGR: message read . . . 35
2.6.6 +CMGW: message write . . . 36
2.6.7 +CSMS: select SMS service . . . 36
2.6.8 +CMGS: message send . . . 37
2.6.9 +CPMS: preferred message storage . . . 38
2.6.10 +CMGD: message delete . . . 39
2.6.11 +CMGL: message list . . . 40
2.6.12 +CMSS: messages saved in SIM card . . . 42
2.6.13 +ZSMGS: message full indication . . . 42
2.7 Phonebook Command . . . 43
2.7.1 +CPBS: phonebook storage . . . 43
2.7.2 +CPBR: phonebook read . . . 43
2.7.3 +CPBW: phonebook write . . . 44
2.7.4 +CPBF: phonebook find . . . 45
2.7.5 +CNUM: owner's number . . . 46
2.8 Data Compression Command . . . 47
2.8.1 +IFC: flow control . . . 47
2.8.2 &D: set DTR mode . . . 47
2.8.3 &C: set DCD mode . . . 47
2.8.4 +IPR: set module's baud rate . . . 47
2.8.5 &F: restore factory settings . . . 48
2.8.6 &W: save settings . . . 48
2.9 GPRS Command . . . 48
2.9.1 +CGDCONT: set PDP . . . 49
2.9.2 +CGACT: activate/deactivate PDP . . . 49
2.9.3 +CGATT: set GPRS . . . 49
2.9.4 +CGCLASS : GPRS device class . . . 49

2.10 ZTE Exclusive Commands 50
2.10.1 +ZGPIO: read/write GPIO 50
2.10.2 +ZSTR: check module's status 51
2.10.3 +ZGETICCID: set ICCID 51
2.10.4 +ZCSQ: set auto display CSQ 52
2.10.5 +ZEDT: set DTR inspection mode 52
2.10.6 +ZDSLEEP: 32KHz Deep sleep mode 53
2.10.7 +CUSD: send USSD data 53
2.10.8 +ZRINGPINMODE: set RING PIN signal mode 55
2.11 Network Parameter Commands 55
2.11.1 +ZPNUM: set APN, username and password 56
2.11.2 +ZPPPOPEN: open GPRS connection 56
2.11.3 +ZPPPCLOSE: close GPRS connection 56
2.11.4 +ZIPGETIP: check current IP address 56
2.11.5 +ZDNSSERV: set DNS IP address 57
2.11.6 +ZDNSGETIP: obtain Internet Domain name's IP address 57
2.12 TCP Link Commands 57
2.12.1 +ZIPSETUP: Set up TCP server link 58
2.12.2 +ZIPSEND: send TCP data to target address 58
2.12.3 +ZPPPSTATUS：check GPRS connection status 58
2.12.4 +ZIPCLOSE: close TCP link 58
2.12.5 +ZIPSTATUS：check current TCP link status 59
2.12.6 +ZIPRECV: receive data from current data link 59
2.13 UDP Link Commands 59
2.13.1 +ZIPSETUPU: set up UDP server link 60
2.13.2 +ZIPSENDU: send data to UDP server 60
2.13.3 +ZIPSTATUSU：check UDP status 60
2.13.4 +ZIPCLOSEU: close UDP link 60
2.13.5 +ZIPRECVU: receive UDP data 61
2.14 Server Commands 61
2.14.1 +ZTCPLISTEN: set port monitoring 62
2.14.2 +ZTCPSENDP: send data through passively opened link 62
2.14.3 +ZTCPCLOSEP: close monitored connection 63
2.14.4 +ZTCPRECV(P): receive data report 63
2.14.5 +ZTCPSTATUSP: check passively opened link 64
2.14.6 +ZIPTIMEOUT: set the timeout for connecting the server & sending data 64
2.14.7 +ZTCPTIMEOUT: set the timeout for receiving data 65
2.15 FTP Commands 66
2.15.1 ZFTPLOGIN: log in FTP server 66
2.15.2 ZFTPTYPE: set FTP file type 66
2.15.3 ZFTPUPLOAD: upload files 67
2.15.4 ZFTPDNLOAD: download files 67
2.15.5 ZFTPDEL: delete files 68
2.15.6 ZFTPQUIT: quit FTP 69

2.16 Transparent Transfer Command 69
+ZTRANSFER: Transparent transfer 69
2.17 Relevant Audio Commands 72
2.17.1 +ZCALLTONE: set pick-up tone 72
2.17.2 +ZDTMFTONE: set ZDTMF tone 72
2.17.3 +SPEAKER: audio channel switch command 73
2.17.4 +ZMICGB: set MIC audio parameters 73
3 Application Cases and Precautions 75
3.1 SMS Application Case 75
3.2 Phonebook Application Case 76

1 General Description

1.1 Description of AT Commands

MG2639 provides AT command interfaces, through which the module could communicate with the external devices conveniently. The AT commands set provided by MG2639 module not only covers the standard GSM voice call and SMS applications, but adds some other commands based on GSM specification and some ZTE exclusive commands for users to use conveniently.

1.1.1 Type of AT Commands

As a standard interface, the returned values and syntax of AT commands are both fixed. As a whole, the AT commands could be divided into four types:

- Without parameter: a type of simple commands; Syntax: AT[+|&]<command>,e.g.: AT+CSQ, AT&W
- Query: used to inquire the current setting value; Syntax: AT[+|&]<command>?, e.g.: AT+CNMI?
- Help: used to list the possible parameters of the command; Syntax: AT[+|&]<command>=?, e.g.: AT+CMGL=?
- Parameter: a kind of mostly common syntax, which provides strong flexibility to the command, Syntax: AT[+|&]<command>=<par1>,<par2>,<par3>…

The returned values of this type of commands are all the same. This will be clarified in details later. The basic frame of the returned value is:

<CR><LF><Response string><CR><LF>

<CR><LF><OK/ERROR>[ERROR INFO]<CR><LF>

1.1.2 Returned Syntax of AT Commands

The following describes the AT commands and returned descriptions supported by MG2639 module:

- AT command returned syntax:

--<CR><LF><corresponding strings ><CR><LF>

--An exceptional case: e.g.: AT+ZPOWEROFF, directly return with “OK”

- AT command status report (OK, ERROR):

--If there is error in AT command syntax, return with “ERROR”;

--If AT command executes successfully, return with “OK”;

1.1.3 AT Command Syntax

- AT command starts with “AT” and ends with <CR>;
- After the module runs, the serial port default setting will be: 8-digit data bit, 1-digit stop bit, no parity check, no CTS/RTS, data rate 115200bps.

1.2 Abbreviations

A		
ADC	Analog-Digital Converter	
AFC	Automatic Frequency Control	
AGC	Automatic Gain Control	
ARFCN	Absolute Radio Frequency Channel Number	
ARP	Antenna Reference Point	
ASIC	Application Specific Integrated Circuit	
B		
BER	Bit Error Rate	
BTS	Base Transceiver Station	
C		
CDMA	Code Division Multiple Access	
CDG	CDMA Development Group	
CS	Coding Scheme	
CSD	Circuit Switched Data	
CPU	Central Processing Unit	
D		
DAI	Digital Audio interface	
DAC	Digital-to-Analog Converter	
DCE	Data Communication Equipment	
DSP	Digital Signal Processor	
DTE	Data Terminal Equipment	
DTMF	Dual Tone Multi-Frequency	
DTR	Data Terminal Ready	
E		
EFR	Enhanced Full Rate	
EGSM	Enhanced GSM	
EMC	Electromagnetic Compatibility	
EMI	Electro Magnetic Interference	
ESD	Electronic Static Discharge	
ETS	European Telecommunication Standard	
F		
FDMA	Frequency Division Multiple Access	
FR	Full Rate	

G		
GPRS	General Packet Radio Service	
GSM	Global Standard for Mobile Communications	
H		
HR	Half Rate	
I		
IC	Integrated Circuit	
IMEI	International Mobile Equipment Identity	
ISO	International Standards Organization	
ITU	International Telecommunications Union	
L		
LCD	Liquid Crystal Display	
LED	Light Emitting Diode	
M		
MCU	Machine Control Unit	
MMI	Man Machine Interface	
MS	Mobile Station	
P		
PCB	Printed Circuit Board	
PCL	Power Control Level	
PCS	Personal Communication System	
PDU	Protocol Data Unit	
PLL	Phase Locked Loop	
PPP	Point-to-point protocol	
R		
RAM	Random Access Memory	
RF	Radio Frequency	
ROM	Read-only Memory	
RMS	Root Mean Square	
RTC	Real Time Clock	
S		
SIM	Subscriber Identification Module	

SMS	Short Message Service	
SRAM	Static Random Access Memory	
T		
TA	Terminal adapter	
TDMA	Time Division Multiple Access	
TE	Terminal Equipment also referred it as DTE	
U		
UART	Universal asynchronous receiver-transmitter	
UIM	User Identifier Management	
USB	Universal Serial Bus	
V		
VSWR	Voltage Standing Wave Ratio	
Z		
ZTE	ZTE Corporation	

2 AT Commands

2.1 Common Commands

2.1.1 A/: repeat

Description	This command is used to repeat the previous command.	
Syntax	A/	
Example	AT+CSQ	Inquire current signal strength
	A/	Repeat AT+CSQ command
	AT+CMGS=”13714393404” >123→	Send a text message
	A/ >123→	Repeat AT+CMGS command

2.1.2 ATA: answer

Description	This command is used to answer a call.	
Syntax	ATA	
Example	RING	An incoming call rings.
	ATA	Answer the incoming call.

2.1.3 ATD: dial

Description	This command is used to originate a voice call, data and fax call.	
Syntax	ATD<string>; ATD><mem><n>; ATD><n>; ATD>”name”;	
Example	AT+CPBS="SM" ATD13024540756;	Select SIM card phonebook as the current phonebook Search the number from SIM card phonebook and dial
	AT+CPBS="SM" ATD>2; OK	Select SIM card phonebook as the current phonebook Search the second phone number in current phonebook
	ATD>SM1;	Dial the first number in SIM card phonebook
	ATD13714393404;	Directly dial the phone number

	ATD>”name”;	Search the phone number with “name” in SIM card and nvram
Parameters	<mem>: phonebook “SM”: SIM card phonebook. “ME”: local phonebook. “LD”: last dialled calls in phonebook. “MC”: missed calls “RC”: received calls <n>: the n-th option in phonebook. <string>: the number of called party, e.g., *99#.	

2.1.4 ATDL: dial last

Description	This command is used to dial the last outgoing number.	
Syntax	ATDL	
Example	ATD34394036; OK	Dial 34394036
	ATH OK	Hang up the call
	ATDL	Dial 34394036 again

2.1.5 ATE: enable

Description	This command is used to enable echo display.	
Syntax	ATE<n>	
Example	ATE0 OK OK	ATE0, don’t display input command on the terminal
	ATE1 OK ATE1 OK	ATE1, displays input command on the terminal
Parameters	<n>=0 Disable echo display. <n>=1 Enable echo display.	

2.1.6 ATH: hang up

Description	This command is used to hang up the call.	
Syntax	ATH	
Example	ATA OK	Answer the call

	ATH	Hang up the call

2.1.7 ATI: Information

Description	This command is used to display the module manufacturer's information.	
Syntax	ATI	
Example	ATI ZTE Mobile LTD GSM/GPRS Mobile Station Revision: 1.0 OK	Display the module manufacturer's information.

2.1.8 ATQ: set whether or not to display the returned value.

Description	This command is used to set whether or not to display the returned value.	
Syntax	ATQ<n>	
Example	ATQ0 OK ATQ0 OK	Set the terminal displays the returned value
	ATQ1 OK ATQ1ATQ1	Set the terminal doesn't display the returned value.

2.1.9 +++: switch from data mode to command mode

Description	This command is used to switch from data mode to command mode.	
Syntax	+++	
Example	ATD*99# CONNECT +++ …… AT OK	Dial to enter data mode Switch from data mode to command mode

2.1.10 ATO: switch from command mode to data mode

Description	This command is used to switch from command mode to data mode.
Syntax	ATO

Example	ATD*99# CONNECT +++ …… ATO ……	Dial to enter GPRS data connection Switch from data mode to command mode Switch from command mode to data mode

2.1.11 ATP: pulse

Description	This command is used for pulse dialling.	
Syntax	ATP	
Example	ATP OK	Set pulse dialling method

2.1.12 ATS0: auto answer setting

Description	This command is used to control the module's auto answer mode.	
Syntax	ATS0=<value>	
Example	ATS0=2 OK	Auto answer after ringing twice
	ATS0? 2 OK	Check current settings
	ATS0=0 OK	Cancel auto answer
Parameter	<value>: ringing times	

2.1.13 +CRC: set ringer type

Description	This command is used to display the type of ringer.	
Syntax	AT+CRC=<num>	
Example	AT+CRC=1 OK +CRING:VOICE	Set RING as ringer type Set CRC as ringer type
Parameters	<num>: 0: Do not display the type of ringer 1: display the type of ringer Descriptions of ringer type: VOICE: Voice	

	GPRS: GPRS service FAX: Fax

2.1.14+CLVL: volume level

Description	This command is used to set the volume level of the speaker.	
Syntax	AT+CLVL=<level>	
Example	AT+CLVL=100 OK	Set current receiver volume as 100
Parameters	AT+CLVL? +CLVL:100	Check the current receiver volume
	<level> ranging 0～100, the lower the level is, the smaller the volume is.	

2.1.15+CLIP: Calling Line Identification Presentation

Description	This command is used to set CLIP. The default settings are to disable CLIP.	
Syntax	AT+CLIP=<mode> +CLIP:<mode> return from AT+CLIP? +CLIP:<number>,<type>,<name>,<subaddr>,<cli_validity> AT+CLIP? +CLIP:<mode>,<status>	
Example	AT+CLIP=1 OK RING:+CLIP: “130********”,129, “name”,“”,0	Enable CLIP There is an incoming call, incoming number is 130********
	AT+CLIP=0 OK RING	Disable CLIP No CLIP
	At+CLIP? +CLIP: 0,1 OK	Inquire CLIP
Parameters	<mode>： 0: disable CLIP 1: enable CLIP; <number>: incoming number (need apply for relevant service) <type>: 129. <name>: contact’s name <subaddr>:syntax of sub address specified by satype. Default as null by MTK. <status>: CLIP status 0: Do not provide CLIP service 1: Provide CLIP service 2: Unknown unavailable network	

2.1.16+ZSETMUTE: mute control

Description	This command is used for mute control and it can be used only during the call.	
Syntax	AT+ZSETMUTE=<Mode>	
Example	AT+ZSETMUTE=? +ZSETMUT:（0-1） OK	check the setting parameters
	AT+ZSETMUTE=1 OK	Mute on
	AT+ZSETMUTE=0 OK	Mute off
Parameters	<Mode>: 0: Turn off mute 1: Turn on mute.	

2.1.17+CIMI: International Mobile Identification

Description	This command is used to read the International Mobile Identification of SIM card and check current PIN.	
Syntax	AT+CIMI	
Example	AT+CIMI 460030916875923 OK	Check CIMI Return CIMI

2.1.18+CGMR: get product version

Description	This command is used to obtain the module's current product version.	
Syntax	AT+CGMR	
Example	AT+CGMR=? OK	No meaning
	AT+CGMR +CGMR: Revision: 1.0 OK	Return current module's version

2.1.19+ECHO: echo remove

Description	This command is used to remove the echo.	
Syntax	AT+ECHO=num	
Example	AT+ECHO? +ECHO:1 OK	Check current echo settings
	AT+ECHO=0 OK	Cancel echo remove

Syntax	Num: default value 1. 1: set echo remove function 0: cancel echo remove function

2.1.20 +(C)GSN: get current IMEI

Description	This command is used to get the current device's IMEI.	
Syntax	AT+GSN	
Example	AT+GSN N OK	Return current IMEI

2.1.21 +ZVERS: get current software version

Description	This command is used to get the current software version.	
Syntax	AT+ZVERS	
Example	AT+ZVERS +ZVERS: ***.bin OK	get the current software version.

2.1.22 +CLCK: lock

Description	This command is used to lock the terminal or network function.
Syntax	AT+CLCK=<fac>,<mode>[,<passwd>[,<class>]] +CLCK:<status>
Example	AT+CLCK=? +CLCK:("PF","SC","AO","OI","OX","AI","IR","AB","AG","AC","FD","PN","PU","PP","PC") OK

Parameters	<fac>: "SC" SIM card; "AO" all outgoing calls barring; "OI" Outgoing international calls barring; "OX" Outgoing international calls barring except for local; "AI" all incoming calls barring; "IR" Incoming roaming barring; "AB" all services barring; "AG" barring of all outgoing calls; "AC" barring of all incoming calls; "FD" Fixed dial; "PN" Personalized network; "PU" Personalized sub network; "PP" Personalized provider; "PC" Personalized corporate. <mode>: 0 unlock 1 lock 2 check the status <passwd>: password or operation code, character string type "***". <class>: 1 voice call 2 data 4 fax 7 All <status>: 0: Disable 1: Enable

2.1.23+CCFC: call forwarding number and conditions

Description	This command is used to set call forwarding number and conditions.	
Syntax	AT+CCFC=<reason>,<mode>[,<number> [, <type>[,<class>[,<subaddr>[,<saytype>[,time]]]]]] If mode!=2, setting successfully return: OK; If mode=2, setting successfully return: +CCFC:<status>,<class>	
Example	AT+CCFC=? +CCFC: (0,1,2,3,4,5) OK	Check call forwarding control setting Return reason range.

Parameters	<reason>: 0:unconditional 1: mobile device busy 2: No answer 3: Can't be connected 4: All calls 5: all conditions <mode>: 0: disabled 1: enabled 2: check status 3: register 4: delete <number>: phone number <type>: 145: international number 129: other number <subaddr>: address of character string type <saytype>: 128 <class>: 1: voice 2: data 4: fax 7: all Time: 1..20..30 multiplies 5 seconds <status>: 0: deactivate 1: activate
Remarks	Need apply for relevant services.

2.1.24+CCWA: call waiting

Description	This command is used for call waiting.	
Syntax	AT+CCWA=[<n>] [,<mode> [,<class>]]	
Example	AT+CCWA=?	List all supported <n> +CCWA: (list of supported <n>s) OK
	AT+CCWA?	Read current <n> +CCWA: <n> OK
	AT+CCWA=[<n>] [,<mode> [,<class>]]	Call waiting setting As mode!=2, if successful: OK As mode!=2, return: +CCWA:<status>,<class1>[<CR><LF> +CCWA:<status>,<class2>[...]] OK If there is an error in operation: +CME ERROR: <err> If <n>=1, send the result code of call waiting: +CCWA: <number>,<type>,<class> [,<alpha>][,<CLI validity>] Under the premise of call waiting activated, during the call connection process; As the call terminates in the system, send the result code of call waiting.
Parameters	<n> 0：do not send the result code of call waiting; 1：send the result code of call waiting. <mode> 0：Deactivate call waiting; 1：Actiavte call waiting; 2：Check current state; <class> 1: voice call <status> 0: deactivate； 1: activate. <number> call waiting number, and its syntax designated by <type>; <type> <number> syntax <alpha>,<CLI validity> see AT+CLIP	

2.1.25+CHLD: call hold

Description	This command is used to set call held and conference call.

Syntax	AT+CHLD=[<n>]	
Example	AT+CHLD=?	Check supported <n> +CHLD: (list of supported <n>s) OK
	AT+CHLD=[<n>]	Set call held and conference call; If the setting is successful: OK If there is an error in operation: +CME ERROR: <err>
Parameters	**<n>** 0: release all held calls or set a waiting call as UDUB 1: Release all activated calls and receive a held or waiting call. 1X: Release call X 2: Hold all activated calls and receive another held or waiting call. 2X: hold all calls except for call X 3: Add the held call into the conference call 4: Connect two calls or end two calls. 5: Activate call request from busy subscriber	
Remarks	1. This command is used for telecom service; 2. The range of X value:1~7 3. When there is both held call and waiting call, the process above should be applied for the waiting call. 4. When releasing call, please firstly use AT+CHLD=1 to release the current call, and use ATH to hang up the call. 5. Please refer to the method of conference call provided by the operator when using AT+CHLD=3.	

2.1.26*TSIMINS: check SIM card status

Description	This command is used to check SIM card status.	
Syntax	AT*TSIMINS=num, status	
Example	AT*TSIMINS? *TSIMINS:0,0 OK	Check SIM card status. No SIM card.
Parameters	Num: take 0 or 1, no meaning. Status： 0：There is no SIM card; 1：There is SIM card.	

2.1.27 +CPWD: change password

Description	This command is used to change the password.	
Syntax	AT+CPWD=<fac>,<passwd>,<newpasswd> +CPWD:<fac,length>s	
Example	AT+CPWD=? +CPWD: ("SC",8),("P2",8),("AO",4),("OI",4),("OX",4), ("AI",4),("IR",4),("AB",4),("AG",4),("AC",4) OK AT+CPWD ="SC","1234","2345" OK	Check the setting range. Return the list of parameters; Change password of SIM card
Parameters	Fac: "SC" SIM card; "AO" all outgoing calls barring; "OI" Outgoing international calls barring; "OX" Outgoing international calls barring except for local; "AI" all incoming calls barring; "IR" Incoming roaming barring; "AB" all services barring; "AG" barring of all outgoing calls; "AC" barring of all incoming calls; "FD" Fixed dial; Passwd: password or operation code, character string type "***". newpasswd: new password or operation code, character string type "***". Length: password length supported by fac.	

2.1.28 +CGMI: inquire manufacturer's information

Description	This command is used to inquire manufacturer's information.	
Syntax	AT＋CGMI	
Example	AT+CGMI +CGMI: ZTE Mobile LTD OK	Inquire manufacturer's information

2.1.29 ATZ: reset

Description	This command is used to read the parameter in NVRAM and set it as the current parameter.	
Syntax	ATZ<n>	
Example	ATZ0 OK	Reset the parameter correctly.

2.1.30 +CSCS: character set selection

Description	This command is used to select the type of languages;
Syntax	AT+CSCS=<string>

Example	AT+CSCS=? +CSCS: "IRA", "GSM", "HEX", "PCCP437", "8859-1", "UCS2", "UCS2_0X81" OK AT+CSCS=”IRA” OK AT+CSCS? +CSCS: ”IRA” OK	
Parameters	String: a type of string, selecting IRA, GSM, etc. “IRA” International Reference Alphabet（refer to ITU-T T.50[13]）, excluding some special alphabets. "GSM" GSM default symbols（refer to section 6.2.1 in GSM 03.38）. "UCS2" 16bit（ISO/IEC10646[32]）; UCS2 string converts to hexadecimal number ranging from 0000 to FFFF;	

2.1.31 +CLCC: check call status

Description	This command is used to check the status of current calls or each call;	
Syntax	AT+CLCC +CLCC:<id1>,<dir>,<stat>,<mode>,<mpty>,[,<number>,<type>[,<alpha>[,<priority>]]] +CLCC:<id2>,<dir>,<stat>,<mode>,<mpty>,[,<number>,<type>[,<alpha>[,<priority>]]] …… OK	
Example	AT+CLCC OK ATD10086 ; OK AT+CLCC +CLCC: 1,0,2,0,0,"10086",129 OK	

Parameters	<idx>: caller ID <dir>: call direction, taking the following value: 0: MO 1: MT <stat> call status, taking the following value: 0: activated 1: call held status 2: call originated, dialing 3: call originated, ringing 4: Incoming call ring status 5: call waiting <mode>: call type, taking the following value: 0: voice call 1: data call 2: fax <mpty>:multi-party call, taking the following value: 0: Non multi-party call 1: Multi-party call <number>: call number, ASCII code <type>: call number type; <alpha>: the text information corresponding to the call number in the phonebook (don't support temporarily, reserve the string) <priority>: do not support string temporarily

2.2

2.3 DTMF Command

2.3.1 +VTS: send DTMF

Description	This command is used to send DTMF.	
Syntax	AT+VTS=<string>	
Example	AT+VTS=? +VTS:(0-9,*#,A,B,C,D),,(1-255) OK	Check +VTS parameter
	ATD********; AT+VTS="3，6，9" AT+VTS=3 AT+VTS=6 AT+VTS=9	Dial Send 369 DTMF
Parameters	String is a combination of characters, separated by comma. The character ranges from 0 to 9,*, #, A-D.	

2.4 Network Service Command

2.4.1 +CREG: network registration and roaming

Description	This command is used to check the module's network registration and roaming status. Note: Need AT&W to save the result when setting 0 or 1.	
Syntax	AT+CREG=<mode> +CREG :<mode>,<stat> return code	
Example	AT+CREG=0 OK	Disabled network registration and provide result code
	AT+CREG? +CREG: 0,1	Display the module's registration status
	AT+CREG=? +CREG: （0-2） OK	Check status range
Parameter	<mode>: 0 Disabled network registration and provide result code (default) 1 Enabled network registration and provide result code: +CREG: <stat> 2 Enabled network registration and provide the location information. <stat>: 0: Not logged on the network yet, currently not searching for new operator 1: Already logged on the local network. 2: Not logged on the network, currently searching for the BS 4: unknown code 5: Already logged on the network, under roaming status	

2.4.2 +COPS: network selection

Description	This command is used for network selection.	
Syntax	AT+COPS=[<mode>[,<syntax>[,<oper>]]]	
Example	AT+COPS? +COPS=<mode>[,<syntax>,<oper>] OK	Return current network's registration mode and network
	AT+COPS=[<mode>[,<syntax>[,<oper>]]] OK	Select and register network

Parameter	<mode> 0 auto select, omit <syntax> <oper> 1 manual select, need <syntax><oper> 3 not involve network registration, this command is used to set syntax only; at this point, need <syntax> 4 manual/auto; If manual registration fails, auto register <syntax> 0 syntax of long character <oper> 1 ormat of short character <oper> 2 number syntax <oper> <syntax>: 0 long syntax alpha <oper>,up to 16 character 1 short <oper>, up to 8 character 2 numeric <oper> (MCC+MNC), default <stat> 0 unknown 2 current registered network 3 forbidden registered network

2.5 Mobile Device Control and Status Report

2.5.1 +CPAS: check module's status

Description	This command is used to check the module's work status.	
Syntax	AT+CPAS	
Example	AT+CPAS +CPAS: 2 OK	Check the module's current work status.
Parameter	<pas> 0: Ready to receive AT command 2: Unknown status (default) 3: Incoming call (ring) 4: In a call <pas>: <pas>: 0: ready to receive AT command; 1: Not ready to receive AT command; 2: Unrecognized status; 3: Incoming call (Ring); 4: can receive AT command, but in a call; 5: In low power consumption mode, can't normally receive AT command.	

2.5.2 +CFUN: set module's function

Description	This command is used to enable/disable some functions of the module.	
Syntax	AT+CFUN=<func>,<rst>	
Example	AT+CFUN=? +CFUN(1,4),(0-1) OK	Check the setting range
	AT+CFUN=1,0	Settings validate, invalid after reset
	AT+CFUN=1,1	Settings valid after reset
Parameter	<fun> 1 Full function (default) 4 Disable RF Tx. and Rx. Function <rst> 0 valid after settings 1 valid after restart	

2.5.3 +CMEE: mobile equipment errors

Description	This command is used for mobile equipment's error report.
Syntax	AT+CMEE=<n>

Example	AT+CMEE?	+CMEE:<n> OK Check current error report method
	AT+CMEE=<n>	OK Select error report method
Parameter	<n> 0 Only ERROR 1 Provide error's specific number 2 Provide error's specific number and detailed prompt	

2.5.4 +ZPWROFF: power off

Description	This command is used to power off the module.	
Syntax	AT+ZPWROFF	
Example	AT+ZPWROFF OK	Power off the module

2.5.5 +CPIN: input PIN

Description	This command is used to check PIN status and input PIN. The functions can be used only after the correct PIN is entered.	
Syntax	AT+CPIN=	
Example	AT+CPIN? +CPIN:READY OK	check PIN status No need to input new PIN
	AT+CPIN? +CPIN:SIM PIN AT+CPIN="****" OK	check PIN status Need input PIN Enter correct PIN
Parameter	AT+CPIN?: check if what passwords need to be entered. +CPIN: READY: don't need to enter any password. +CPIN: SIM PIN: need enter PIN. +CPIN: SIM PUK： PIN unlock password +CPIN: PH-SIM PIN: SIM card bundle password +CPIN: SIM PIN2: PIN2 password +CPIN: SIM PUK2: PIN2 unlock password +CPIN: PH-NET PIN: network password Pin: string value.	

2.5.6 +CSQ: check signal strength

Description	This command is used to check received signal strength indicator(rssi) and bit error rate (ber)

Syntax	AT+CSQ	
Example	AT+CSQ +CSQ:<rssi>,<ber>	
parameters	<rssi>: 0–113dbm 1-111dbm 2..30–109..-53dbm 31-51dbm 99：network unavailable <ber>: 0～7：normal 99：network unavailable	

2.5.7 +CCLK: clock management

Description	This command is used to set and check the date/time of real-time clock.	
Syntax	AT+CCLK=<time>	
Example	AT+CCLK? +CCLK: "04/02/09,17:34:23"	Check current time and date Current network time and date
parameters	AT+CCLK="04/02/09,18:34:23"	Set current date and time
	Time string syntax: "yy/mm/dd,hh: mm: ss "	

2.6 Message Service Command

2.6.1 +CSCA: SMS center number

Description	This command is used to set SMS center number.	
Syntax	AT+CSCA=<sca>[,<tosca>]	
Example	AT+CSCA="+861380****500" OK AT+CSCA? +CSCA: "8613800755500", 145 OK	Set SMS center number Check SMS center number
Parameters	<sca>： SMS center address <tosca>: SMS center syntax	

2.6.2 +CNMA: message acknowledgement

Description	This command is used for message acknowledgement.	
Syntax	AT+CNMA	
Example	at+cnmi=2,2,0,0,0 OK at+csms=1 +CSMS: 1,1,1 OK +CMT:,60 …… AT+CNMA OK	Set message indication syntax Set message service syntax Message acknowledgement
Parameters	Valid when setting+CNMI=2,2,0,0,0 and +CSMS=1,1,1,1	

2.6.3 +CMGF: SMS mode

Description	This command is used to set SMS input method.	
Syntax	AT+CMGF=<num>	
Example	AT+CMGF=1 OK AT+CMGF? +CMGF： 1 AT+CMGF=? +CMGF=(0-1) OK	Set the text mode Check current input method Current settings as text mode Check current setting range
Parameters	0： PDU mode 1： Text mode	

2.6.4 +CNMI: message indication

Description	This command is used to set new message indication.	
Syntax	AT+CNMI=<mode>,<mt>,<bm>,<ds>,<bfr>	
Example	AT+CNMI=? +CNMI: (0-3),(0-3),(0,2,3),(0,1),(0,1) OK	Check current setting range
	AT+CNMI=3,1,0,0,0 OK +CMTI: "SM",19	Set message receiving mode as +CMTI: men, index Receive new messages
	AT+CNMI=3,2,0,0,0 OK AT+CMGF=1 OK +CMT: "+86130********","","07/02/14, 10:29:04+32" text	Set message receiving mode Set as TEXT mode Received a message TEXT from 130********
Returned results	+CMTI:<mem>,<index> : receive new message +CMT:,<length><CR><LF><pdu> : directly output message (PDU mode) +CBM:<length><CR><LF><pdu> : directly output cell broadcast message (PDU mode)	

Parameters	**<mode>**: control the processing of message alert code. 0: message alert code cached in TA; if TA is full, the alert code may be saved in other place or the oldest code might be abandoned and replaced by the latest code. 1: when the connection of TA-TE is held, abandon the saved message alert code and reject the new alert code; in other cases, directly display the alert code on the terminal; 2: when the connection of TA-TE is held, the message alert code is cached in TA, as the connection is released, directly display the alert code on the terminal;; in other cases, directly display the alert code on the terminal; 3: directly display the alert code on the terminal; **<mt>**: set the syntax of new message alert code. 0: save received messages to default memory (including class 3), do not notify TE. 1: The syntax of new message alert code is +CMTI: "MT",<index>, message contents saved but not directly displayed; 2: The syntax of New message alert code is: (Text mode) +CMT :<oa>,[<alpha>],<scts>[,<tooa>,<fo>,<pid>,<dcs> <sca>,<tosca>,<length><CR><LF><data>, message contents directly displayed but not saved; (PDU mode) +CMT:[<alpha>],<length><CR><LF><pdu> 3: For class 3 messages, directly send to TE just as ＜mt＞＝2. For other class, the same goes to ＜mt＞＝1. **<bm>:** Indication method upon the receipt of broadcast message. 0: No CBM alert sent to TE. 2: Send new CBM directly to TE. (text mode) +CBM :<sn>,<mid>,<dcs>,<page>,<pages> <CR><LF><data>(text mode), cell broadcast contents directly displayed but not saved; (PDU mode) +CBM:<length><CR><LF><pdu> 3: Class 3 CBM uses the result code (defined in <mt>=2） and directly sends to TE. **<ds>:** message status report 0: no message status report sent to TE. 1: send message status report to TE： +CDS: <length><CR><LF><pdu> (PDU mode) +CDS: <fo>,<mr>,[<ra>],[<tora>],<scts>,<dt>,<st> (TEXT mode) **<bfr>:** 0: as <mode> is set as 1..3, the code saved in TA will be sent to TE (return OK prior to transmitting the code). 1: as <mode> is set as 1..3, the code saved in TA will be erased.

2.6.5 +CMGR: message read

<table>
<tr><td>Description</td><td colspan="2">This command is used to read the received message.</td></tr>
<tr><td>Syntax</td><td colspan="2">AT+CMGR=?</td></tr>
<tr><td rowspan="2">Example</td><td>AT+CMGF=1
AT+CMGR=1
+CMGR:"REC UNREAD","133********",,
"04/02/25,12 :58 :04＋04"
ABCD
OK</td><td>+CMTI:
“MT”：1
Receive the message, saved at index 1
Set TEXT syntax

Read the first TEXT message</td></tr>
<tr><td>AT+CMGF=0
AT+CMGR=1
+CMGR: 1,,127
0891683108705505F00408A1705581
0600087010919055642 36E5C0A656C
76845BA26237FF0C60A85DF27ECF62
10529F5F00901A4E86003100300030
5143004700500052005359 5799104F
1860E04E1A52A1FF0C4ECE00320030
003000375E74003000326708003000
3165E55F0059CB751F654830028C22
8C22FF016DF1573379FB52A8
516C53F8</td><td>Set PDU mode

Read first PDU message</td></tr>
<tr><td>Returned results</td><td colspan="2">AT+CMGR=<index>
Return syntax:
The terminal adaptor would return the message of index saved in mem1
-if select text mode (+CMGF=1)：
+CMGR :<stat>,<oa>,[<alpha>],<scts>[,<tooa>,<fo>,<pid>,<dcs>,
<sca>,<tosca>,<length>]
<CR><LF> <data> (used to read received message)
+CMGR :<stat>,<da>,[<alpha>][,<toda>,<fo>,<pid>,<dcs>,[<vp>],<sca>,
<tosca>,<length>]
<CR><LF> <data> (used to read transmitted message)
--if select PDU mode (+CMGF=0)：
+CMGR: <stat>,[<alpha>],<lenth>,<CR>,<LF>,<pdu>
OK
-if error occurs, prompt:
+CMS ERROR:<err>
Note: after reading message, the status will change from “REC UNREAD” to “REC READ”.</td></tr>
</table>

Parameter	<alpha>：the name of corresponding <da> or <oa> on the terminal. <stat>：the message status in memory. <oa>：message original number string <da>：message target string <scts>：message service center time string <lenth>： length of message body <data> <pdu>：ME/TA hex value <stat>: 0:“REC UNREAD” received unread message. 1:“REC READ” received read message. 2:“STO UNSENT” saved unread message. 3:“STO SENT” saved read message 4: “All” all messages

2.6.6 +CMGW: message write

Description	This command is used to save the messages into <mem2>.	
Syntax	TEXT mode: (AT+CMGF=1) AT+CMGW=<phone number> >string<ctrl-Z> PDU mode:(AT+CMGF=0) AT+CMGW=<string len> >pdu string<ctrl-Z>	
Example	AT+CMGF=1 OK AT+CMGW="13714393404" > AT+CMGW="13714393404"<ctrl-Z> +CMGW: 41 OK AT+CMGF=0 OK AT+CMGW=17 >0891683108705505f011000b813120 882624f700f1ff0361f118<ctrl-Z> +CMGW: 42 OK	Write messages under Text mode Write messages under PDU mode
Parameters	phone number: string len: length of PDU string	

2.6.7 +CSMS: select SMS service

Description	The command is used to select SMS <service>. Send（SMS-MO）, receive（SMS-MT）, cell broadcast SMS-CB.
Syntax	AT+CSMS = <service>

Example	AT+CSMS? +CSMS:0,1,1,1 OK	Check the current SMS service Support receive/transmit message and cell broadcast
	AT+CSMS=0 +CSMS: 1,1,1 OK AT+CSMS? +CSMS:0,1,1,1 OK	Set current SMS service as GSM Phase 2 Support receive/transmit message and cell broadcast Check the settings Succeed
Parameter	<service> 0：compatible with GSM07.05 Phase 2 version 4.7.0 1：compatible with GSM07.05 Phase 2+ version <mo> 1：support send message <mt> 1：support receive message <bm> 1：support cell broadcast	

2.6.8 +CMGS: message send

Description	This command is used to send the message from the terminal to the network. Return the parameter to the terminal after the message is sent. Note: there is error prompt as the message is sent to illegal number.	
Syntax	Text mode (AT+CMGF=1) AT+CMGS=<de><CR> <data><Ctrl-Z/ESC> PDU mode(AT+CMGF=0) AT+CMGS=<length><CR> <pdu><Ctrl-Z/ESC>	
Example	AT+CMGF=1 OK	Set as text mode
	AT+CMGS="13316538879"<CR> ABC<ctrl/Z> OK AT+CMGF=0 OK	Send a “ABC” message to 13316538879 Set as PDU mode
	AT+CMGS=17<CR> 0891683108705505f011000b81312 0882624f700f1ff0361f118<Ctrl-Z> +CMGS:2 OK	Send a “ABC” message to 13028862427

Parameter	<de>：message sending number under text mode <length>：length of bytes in TPDU under PDU mode <data>: message under text mode

2.6.9 +CPMS: preferred message storage

Description	This command is used for preferred message storage.	
Syntax	AT+CPMS=<mem1>[,<mem2>[<mem3>]] +CPMS=<used1>,<total>	
Example	AT+CPMS="SM","SM","SM" ＋CPMS:4,50,4,50,4,50 OK at+cpms=? +CPMS: ("SM", "ME", "SM_P", "ME_P", "MT"), ("SM", "ME", "SM_P", "ME_P", "MT"), ("SM", "ME", "SM_P", "ME_P", "MT") OK at+cpms? +CPMS: "SM", 4, 50, "SM", 4, 50, "SM", 4, 50 OK at+cpms="me","me","me" +CPMS: 0, 450, 0, 450, 0, 450 OK at+cpms? +CPMS: "ME", 0, 450, "ME", 0, 450, "ME", 0, 450 OK	Check message storage in SIM card mem1 total capacity 50 entries, 4 used mem2 total capacity 50 entries, 4 used mem3 total capacity 50 entries, 4 used

Parameters	<mem1>：used to read, delete message in SIM card <mem2>：used to write and send message in SIM card <mem3>：used for messages not saved to PC in SIM card <used>：used entries <total>：total number of memory SM: SIM card ME: NVRAM

2.6.10+CMGD: message delete

Description	This command is used to delete a message from selected memory.	
Syntax	AT+CMGD=<Index>	
Example	AT+CMGF=1 AT+CMGL="all" +CMGL:1,"REC READ","130********","", abcdefg +CMGL:2,"REC READ","131********","", abcdef +CMGL:3,"STO SENT","1331********","" opqrxt OK AT+CMGD=2 OK	Set as text mode List all messages Delete the second message

	AT+CMGF=0 AT+CMGL=4 +CMGL: 1,3,,21 0891683108705505F0010F0B813 120882624F700 0808738B54084F1F5927 +CMGL: 2,3,,21 0891683108705505F001100B813 120882624F700 0808738B54084F1F5927 +CMGL: 3,3,,21 0891683108705505F001110B8131 20882624F700 0808738B54084F1F5927 OK AT+CMGD=1 OK at+cmgd=1,1 OK at+cmgd=1,2 OK at+cmgd=1,3 OK at+cmgd=1,4 OK	Set as PDU mode List all messages <

Example	AT+CMGF=1 OK AT+CMGL="ALL" +CMGL:1,"REC READ","130********","", abcdefg +CMGL:2,"REC READ","131********","", abcdef +CMGL:3,"STO SENT","1331********","", opqrxt OK	Set as text mode Use text mode Check all messages
Returned syntax	1) text mode as below: +CMGL :<index>,<stat>,<da/oa>,[<alpha>],[<scts>][,<tooa/toda>,<length>] <CR><LF><data><CR><LF> +CMGL :<index>,<stat>,<da/oa>,[<alpha>],[<scts>][,<tooa/toda>,<length>] <CR><LF><data> […] (Received/transmitted message list) OK 2)PDU mode as below: +CMGL:<index>,<stat>,[<alpha>],<length><CR><LF><pdu>	
Parameters	1. text mode(+CMGF=1) <stat> REC UNREAD: receive unread message REC READ: receive read message STO UNSENT: store unsent message STO SENT: store sent message ALL: all messages 2.PDU Mode (+CMGF=0) <stat> <stat>： 0: received unread message 1: received read message 2: saved unsent message 3: saved unsent message 4: All messages <index>： message index <length>：TPDU length in PDU mode <pdu>：binary system in PDU mode <data>： message text in text mode	

2.6.12+CMSS: messages saved in SIM card

Description	This command is used to send the messages saved in SIM card.	
Syntax	AT+CMSS=<index>[,<da> [,<toda>]] Return syntax: +CMSS : <mr> 或+CMS ERROR: <err> If the new target number is designated, the new number will replace the number saved in the message.	
Example	AT+CMGF=1 AT+CMGW="1331653****"<CR> ABC<ctrl-Z> +CMGW:2 OK	Set as text mode Write a message and send it to 1331653**** The message will be saved in index 2
	AT+CMSS=2 +CMSS:0 OK	Send the messages saved in index 2 Message sent CMSS return initial value 0
	AT+CMSS=2 +CMSS:1 OK	As the message is saved Do not designate the number to send the message Message sent，(send to the address used to save the message CMSS return value 1
	AT+CMSS=2,"1302755****" +CMSS:2 OK	Use number 1302755**** to replace the original number 1331653****, and send a message to new number

2.6.13+ZSMGS: message full indication

Description	This command is used to indicate the message full status.	
Syntax	+ZSMGS:<status>	
Example	+ZSMGS:FULL OK	+ZSMGS:FULL OK
Parameters	<status>： messages status full	

2.7 Phonebook Command

2.7.1 +CPBS: phonebook storage

Description	This command is used to select phonebook memory.	
Syntax	AT+CPBS=<type>	
Example	AT+CPBS? +CPBS: "SM",1,250 OK	Check current phonebook settings Select SIM card as current phonebook
	AT+CPBR=1 +CPBR=1,"130********",129,"" OK	Check phonebook storage memory
	AT+CPBS=? +CPBS: ("ME", "SM", "LD", "MC", "RC","FD","DC","ON") OK	Select the phonebook saved in SIM card
Parameters	Type: “SM” SIM card “FD” Fixed dial “LD” Last dial “MC” Missed calls “ME” Module memory “DC” Dialed calls “RC” Received calls "ON": number list in SIM card (or ME)	

2.7.2 +CPBR: phonebook read

Description	This command is used to read the phonebook information.	
Syntax	AT+CPBR=<index1>,[<index2>] +CPBR:<index>,<number>,<type>,<text>	
Example	AT+CPBR=? +CPBR: (1-10),40,13 OK	Check current phonebook information
	AT+CPBR=1 +CPBR=1,"130********",129,"" OK	Read the first number of currently selected phonebook

	AT+CPBS="SM" OK AT+CPBR=? +CPBR: (1-10),40,13 AT+CPBR=1,3 +CPBR: 1,"8151****",129,"" +CPBR: 2,"8636****",129,"" +CPBR: 3,"8604****",129,""	Select SIM card phonebook Check SIM card phonebook information Read the contacts information from 1 to 3
Parameters	index1: read phonebook index index2: read the contacts information from index1 to index2 index: index number: phone number type: phone type 129: domestic 145: international text: number's corresponding name	

2.7.3 +CPBW: phonebook write

Description	This command is used to write information into the phonebook.	
Syntax	AT+CPBW= <index>,<number>,<type>,<name> +CPBW:(<index>),<length>,(<type>),<tlength>	
Example	AT+CPBW=? +CPBW: (1-250),40,(129,145),14 OK	AT+CPBW=? +CPBW: (1-250),40,(129,145),14 OK
	AT+CPBS="SM" OK AT+CPBW=1,"130********",129, "john" OK AT+CPBR=1 +CPBR:1,"130********",129, "john" OK AT+CPBW=1 OK	Select SIM card memory Write the number and number at Index 1 in the phonebook Read the first name and number in phonebook Delete the first entry in phonebook

Parameters	Index: index length: number length type: phone type 129: domestic 145: international tlength: length of contact's name Number: phone number Name: name corresponding to the number
Remarks	For Chinese name, the limit length of Chinese name is not 14 because the Chinese string is ended with "\0\0".

2.7.4 +CPBF: phonebook find

Description	This command is used to find the information in phonebook.	
Syntax	AT+CPBF= <name> +CPBF: <index>,<number>,<type>,<name> +CPBF:<nlength>,<tlength>	
Example	AT+CPBF=? +CPBF:40,14 OK	Check current phonebook information Phone number length 40 Name length 14
	AT+CPBS="SM" OK AT+CPBW=1,"130********",129, "john" OK AT+CPBR=1 +CPBR:1,"130********",129, "john" OK AT+CPBF="john" +CPBF: 1,"130********",129,"john" OK	Select phonebook Write phone information in the first field of current phonebook Read relevant information Search the contacts with the name John
Parameter	index: index nlength: number length type: phone type 129: domestic 145: international tlength: length of contact's name Number: phone number Name: name corresponding to the number	
Remarks	Only find in "SM","ME", can't find in "LD", "MC", "RC","FD","DC","ON".	

2.7.5 +CNUM: owner's number

Description	This command is used to read the owner's number.	
Syntax	AT+CNUM	
Example	AT+CNUM +CNUM: "","130********",129,7,4 OK	Read the owner's number
Parameter	The owner's number can be written into SIM card through AT+CPBS="ON" ;AT+CPBW command and read through AT+CNUM command.	

2.8 Data Compression Command

2.8.1 +IFC: flow control

Description	This command is used to set the flow control between TE-TA.	
Syntax	AT+IFC=[<mode1 >[,<mode2>]]	
Example	AT+IFC=2,2 OK	Set mode1 of TE-TA flow control as RTS，mode2 as CTS
Parameter	mode1： 0: no flow control. 1:XON/XOFF, don't transmit data; 2:RTS; 3: XON/XOFF, transmit data. mode2: 0: no flow control. 1: XON/XOFF; 2: CTS;	

2.8.2 &D: set DTR mode

Description	This command is used to set DTR mode;	
Syntax	AT&D[<value>]	
Example	AT&D0 OK	Omit DTR signal
Parameter	value: 0：Omit DTR signal; 1: DTR from OFF to ON; 2: DTR from ON to OFF;	

2.8.3 &C: set DCD mode

Description	This command is used to set DCD mode;	
Syntax	AT&C[<value>]	
Example	AT&C0 OK	DCD signal is always valid
Parameter	value: 0: DCD signal is always valid; 1: DCD signal is valid if there is data;	

2.8.4 +IPR: set module's baud rate

Description	This command is used to set the module's baud rate and automatically save the current baud rate.
Syntax	AT+IPR=<baud rate>

Example	AT+IPR? +IPR: 115200 OK	Check current module's baud rate
	AT+IPR=?	Check supported baud rate
	AT+IPR=115200 OK	Set the baud rate as 115200
Remarks	The default is the saved setting of baud rate.	

2.8.5 &F: restore factory settings

Description	This command is used to restore factory settings.	
Syntax	AT&F	
Example	AT&F	Restore factory settings
Remarks	AT&F command's parameters include ATS, ATQ & ATE. AT&F basic parameters can't be validated from the echo of AT commands. Reference validation method: after turning on the module, firstly input AT&V, obtain basic parameters; use the set parameters such as ATS, CREG; after setting, use AT&F to obtain the basic parameters. Compare these parameters and check if they are identical.	

2.8.6 &W: save settings

Description	This command is used to save the current parameter settings.	
Syntax	AT&W	
Example	AT&W	Save the current parameter settings.
Remarks	AT&W command's parameters used to save include ATE, ATQ and ATS. The user parameters saved by AT&W can't be validated from the echo of AT commands. Reference validation method: firstly use the set parameters such as ATE, ATQ & ATS, use AT&V to read the user information, and then input ZT&W; after restarting the module, use ATZ1 to read NV and use AT&V to read the user information. Compare to the parameters before restarting and check if they are identical.	

2.9 GPRS Command

2.9.1 +CGDCONT: set PDP

Description	This command is used to set GPRS PDP syntax;	
Syntax	AT + CGDCONT=cid, type, APN[,PDP_ADDR]	
Example	At + CGDCONT=1, "IP","CMNET" ATD*99# …… Connect	
Parameters	cid: used to mark the number of PDP, minimum 1; type: a type of PDP package; IP: use TCP/IP package; APN: access point network PDP_ADDR: user designated IP address (optional)	

2.9.2 +CGACT: activate/deactivate PDP

Description	This command is used to activate/deactivate PDP settings.	
Syntax	AT+CGACT= [<state> [, <cid> [, <cid> [,..]]]]	
Example	At + CGDCONT=1,"IP","CMNET" OK AT+CGACT=1,1 OK	
Parameters	cid: used to mark PDP parameter; state: used to indicate PDP status; 0: deactivate; 1: activate;	

2.9.3 +CGATT: set GPRS

Description	This command is used to set GPRS service.	
Syntax	AT+CGATT=[<state>]	
Example	AT+CGATT? +CGATT:0 OK AT+CGATT=1 OK	Check GPRS service status Set GPRS service status
Parameter	state: 0: detach 1: attach	

2.9.4 +CGCLASS : GPRS device class

Description	This command is used to check GPRS device levels.
Syntax	AT+CGCLASS=[<class>]

Example	AT+CGCLASS? +CGCLASS:"B" OK	Check GPRS device levels.
Parameter	class: B: support Class B CG :support GPRS only CC: support circuit exchange only	

2.10 ZTE Exclusive Commands

2.10.1 +ZGPIO: read/write GPIO

Description	This command is used to set input/output interface and read/write GPIO value.

Syntax	AT+ZGPIO=<flag>,<index>,<value>	
Example	AT+ZGPIO=0,5（read） +ZGPIO: 0 OK	
	AT+ZGPIO=1,22,1（write） OK	
Parameter	<flag>： 0：read 1：write <index>：Index for GPIO to read/write; <value>： 0：I/O set as 0; 1：I/O set as 1;	
Remarks	Only GPIO5, GPIO22 provided to users for operation.	

2.10.2+ZSTR: check module's status

Description	This command is used to check the module's operation status;	
Syntax	AT+ZSTR=<status> +ZSTR: <status>,<value>	
Example	AT+ZSTR=1	Check initialization status
	AT+ZSTR=2	Check network status
	AT+ZSTR=?	Check the list of parameters
Parameters	<status> 1:No meaning, input AT+ZSTR=1, and display ZSTR: 1,2。 2: network status. <value> 0:network unavailable; 1:network available; 2: no meaning.	

2.10.3+ZGETICCID: set ICCID

Description	Read ICCID in SIM card	
Syntax	AT+ZGETICCID	
Example	No parameter	
Descriptions of returned values	+ZGETICCID:89860042190733578148 OK	Description: ICCID value as 89860042190733578148

2.10.4+ZCSQ: set auto display CSQ

Description	This command can be used to set a threshold value <NUM>. As the RSSI is larger than the threshold value, the module will send +CSQ at the COM port. Note: Note: the threshold value <NUM> does not refer to the RSSI. The threshold value is identical to the <rssi> displayed by the command AT+CSQ. Besides, the command would affect RI status. Please pay attention and avoid mixing with incoming call indication.	
Syntax	AT+ZCSQ＝<NUM>	
Example	AT+ZCSQ=5	+CSQ：24,0 OK
	AT+ZCSQ?	5 OK
	AT+ZCSQ=?	+ZCSQ: (0-32) OK
Parameter	<NUM> range: 0～32	
Remarks	As the RSSI is larger than the threshold value <NUM>, the module would pull RI pin (ME3000 Pin15) down 50ms and display the current RSSI value in the syntax of "+CSQ: <rssi>,<ber>" while restoring RI pin's high level. If the threshold value <NUM> is equal to 0, stop reporting the signal quality. If the threshold value <NUM> default value is 0, the module will auto restore to the default settings after restart. When checking RSSI, if return "+CSQ:99,99"; 99 doesn't represent the actual <rssi> value, but the valid <rssi> value which is not yet obtained.	

2.10.5+ZEDT: set DTR inspection mode

Description	This command is used to set the inspection mode for DTR pin. There are two inspection modes: A） the module reads DTR pin's level; as DTR pin is at low level, the module think DTR signal is valid, namely the module is effectively connected with DTE device; otherwise, the module is disconnected with DTE device; B） the module doesn't read DTR pin's level; and the DTR signal would be always valid, namely the module will be always connected with DTE device effectively.	
Syntax	AT+ZEDT＝<NUM>	
Example	AT+ZEDT=1	OK
	AT+ZEDT?	+ZEDT: 1 OK
	AT+ZEDT =?	+ZEDT: (0,1) OK
Parameter	<NUM> range: 0～1	

Remarks	The command "+ZEDT" is mainly used to set the module at low power consumption mode; under low power consumption mode; the module could intermittently turn off the RF components, besides, the MCU、DSP、PLL , external clock at digital baseband part can enter dormant mode, and 26MHz main crystal oscillator would enable/disable regularly to reduce the module's power consumption. Whether or not the module can enter low power consumption mode depends on the following factors: 1) Key (including ON/OFF key) event and exception/external interruption; 2) whether or not receive valid DTR signal; 3) OTA event (e.g., receive text message, incoming call, etc.) In order to make the module enter low power consumption mode, please use the command "AT+ZEDT？" to check the module's current settings after start-up; if returning with "+ZEDT: 0", please use the command "AT+ZEDT=1" to change the settings; If you ever use the ON/OFF jumper cap, remove it. Disconnect the COM port---including AT port and debugging port. The module would enter the low power consumption mode after a while (1～3 minutes). The default value of the setting value <NUM> is 0. Besides, the command "+ZEDT" would effect the status LED. After setting AT+ZEDT=1, the status LED would not flash. The status LED will restore normally after changing the settings through the command AT+ZEDT=0 and restarting the module.

2.10.6+ZDSLEEP: 32KHz Deep sleep mode

Description	This command is used to enable/disable 32KHz sleep mode.	
Syntax	AT+ZDSLEEP=<mode>	
Example	AT+ZDSLEEP=1	Enable sleep mode
	AT+ZDSLEEP=0	Disable sleep mode
Parameter	<mode> 0: disable sleep mode 1: enable sleep mode	
Remarks	After entering sleep mode, awaken through DTR. Valid at high level.	

2.10.7+CUSD: send USSD data

Description	Send USSD data（ASCII code）
Syntax	AT+CUSD=n,0,"str",dcs
Parameter	1. <n> ： ➢ 0 disable result code presentation in the TA ➢ 1 enable result code presentation in the TA ➢ 2 cancel session 2. <str>

	string type: USSD string (see 3GPP 27.007 for use)。 Please use ASCII code. 3. <dcs> integer type: 3GPP 23.038 Cell Broadcast Data Coding Scheme。 Recommended to use 15.	
Descriptions of returned value	+CUSD: <m>[,<str>,<dcs>] OK Among: <m> 0 no further user action required 1 further user action required 2 USSD terminated by network 3 other local client has responded 4 operation not supported 5 network time out	
Example	AT + CUSD=1,0,"*100#",15 +CUSD: 1,"6b228fce4f7f75285e7f4e1c79fb52a85feb4fe1003 100300030ff01000a003165b095fb59296c14000a00 3280a17968884c60c5000a00334f1195f29a7f7ad90 00a00346c11751f67e58b e2000a00357ecf51786d4b8bd5000a0036621176845 feb4fe1000a00374f7f75285e2e52a9000a",72 OK	Connect *100#, and returned information is within"", and the encoding method is UCS2.
Note	The second parameter must be 0.	

Description	Send USSD data（binary）
Syntax	AT+CUSD==n, len, dcs
Parameter	1. <n> ： ➢ 0 disable result code presentation in the TA ➢ 1 enable result code presentation in the TA ➢ 2 cancel session 2. <len> The length of binary data required, unit: byte 3. <dcs> integer type: 3GPP 23.038 Cell Broadcast Data Coding Scheme; Recommended to use 15.
Descriptions of returned value	+CUSD: <m>[,<str>,<dcs>] OK Among: <m> 0 no further user action required 1 further user action required 2 USSD terminated by network

	3 other local client has responded 4 operation not supported 5 network time out	
Example	at+cusd=1,5,15 > OK +CUSD: 1,"6b228fce4f7f75285e7f4e1c79fb52a85feb4fe1003 100300030ff01000a003165b095fb59296c14000a00 3280a17968884c60c5000a00334f1195f29a7f7ad00a 00346c11751f67e58be2000a00357ecf51786d4b8bd 5000a0036621176845feb4fe1000a00374f7f75285e2 e52a9000a",72	1. Connect *100#, and returned information is within "", and the encoding method is UCS2. 2. After > appears, you can input any data stream in binary mode, but there is no display.
Note	1. The second parameter must be larger than 0. 2. There is no data display.	

2.10.8+ZRINGPINMODE: set RING PIN signal mode

Description	This command is used to set RING PIN signal mode.	
Syntax	AT+ZRINGPINMODE=<N>	
Parameters	<N> ➢ 0：RING PIN is at original signal mode; the pin is at low level upon incoming call; and is at high level during other time. No change (remaining to be at high level) upon the receipt of text message. ➢ 1：RING Pin is at new signal mode; The PIN generates 1s low level and 4s high level upon an incoming call, until the call is ended or terminated; and is at high level during other time. Generate 1s low level pulse upon the receipt of new messages; maintain high level during other time.	
Example	AT+ZRINGPINMODE = 0	Set RING pin as original mode
	AT+ZRINGPINMODE = 1	Set RING pin as new signal mode
Descriptions of returned values	No returned value	

2.11 Network Parameter Commands

2.11.1+ZPNUM: set APN, username and password

Description	This command is used to set the operator's APN, username and password.	
Syntax	AT+ZPNUM=<APN>,<USER>,<PWD>	
Example	AT+ZPNUM="cmnet", "user", "pwd" OK	
	AT+ZPNUM?	Check current APN,USER,PWD settings
Parameter	APN:GPRS APN provided by operator; USER: username PWD: password APN: USER, PWD is a kind of character "string".	

2.11.2+ZPPPOPEN: open GPRS connection

Description	This command is used to open GPRS connection.	
Syntax	AT+ZPPPOPEN	
Example	AT+ZPNUM="cmnet", "user", "pwd" OK AT+ZPPPOPEN +ZPPPOPEN:CONNECTED OK .... AT+ZPPPOPEN +ZPPPOPEN: ESTABLISHED OK	

2.11.3+ZPPPCLOSE: close GPRS connection

Description	This command is used to close GPRS connection.	
Syntax	AT+ZPPPCLOSE	
Example	AT+ZPPPCLOSE OK	
	AT+ZPPPCLOSE +ZPPPCLOSE: DISCONNECTED OK	

2.11.4+ZIPGETIP: check current IP address

Description	This command is used to obtain the IP address.	
Syntax	AT+ZIPGETIP	
Example	AT+ZIPGETIP +ZIPGETIP: *.*.*.* OK	Obtain the module's IP address

Parameter	* is a value from 0～255;

2.11.5 +ZDNSSERV: set DNS IP address

Description	This command is used to set the IP address of the DNS.	
Syntax	AT+ZDNSSERV=<IP1>，<IP2>	
Parameter	<IP1>: the IP address of main DNS; <IP2>: the IP address of sub DNS;	
Example	AT+ZDNSSERV=”211.136.20.203”,”211.136.18.171” OK AT+ZDNSSERV=”211.136.20.203”,”” OK AT+ZDNSSERV? 211.136.20.203 211.136.18.171 OK	Set DNS IP address Check DNS IP address
Remarks	When setting the server, you must mandatorily set the main DNS server and selectively set the secondary DNS server. For IP settings, the parameter can’t exceed 255.	

2.11.6 +ZDNSGETIP: obtain Internet Domain name’s IP address

Description	This command is used to obtain Internet Domain name’s IP address.	
Syntax	AT+ZDNSGETIP=<domain name>	
Parameter	<domain name>： Internet domain name;	
Example	AT+ZDNSGETIP=”WWW.163.COM” 202.108.09.32 202.108.09.33 OK	Obtain IP address

2.12 TCP Link Commands

2.12.1+ZIPSETUP: Set up TCP server link

Description	This command is used to send data to a bundled TCP server.	
Syntax	AT+ZIPSETUP=<N>,<IP>,<M>	
Example	AT+ZIPSETUP=1,61.144.216.219,2332 +ZIPSETUP:CONNECTED OK	Connect to TCP server.
Parameter	N: the channel No. of TCP links, ranging from 0 to 4; support 5 TCP links with 5 different IP addresses and ports; IP：IP value of one target address, *.*.*.*. * range: 0～255. M: port number;	
Remarks	MTK only supports 6 sockets online at the same time. The total number of TCP and UDP links can't exceed 6 when establishing the links.	

2.12.2 +ZIPSEND: send TCP data to target address

Description	This command is used to connect the target server.	
Syntax	AT+ZIPSEND= port, length<CR> Send data after prompt with '>'	
Example	AT+ZIPSEND=1,10 >abcdefghij +ZIPSNED:OK OK	Send data to TCP server after successfully connecting the server. Send 10 bytes: abcdefghij
Parameter	port: the channel number of TCP links; length: data length (support up to 1000 bytes, and support 0x00~0xff transmitting).	

2.12.3 +ZPPPSTATUS：check GPRS connection status

Description	This command is used to check GPRS link status.	
Syntax	AT+ZPPPSTATUS	
Example	AT+ZPPPSTATUS +ZPPPSTATUS: ESTABLISHED OK	Check GPRS link status
	AT+ZPPPSTATUS +ZPPPSTATUS: DISCONNECTED OK	Check GPRS link status

2.12.4 +ZIPCLOSE: close TCP link

Description	This command is used to close TCP link.
Syntax	AT+ZIPCLOSE=<N>

Example	AT+ZIPCLOSE=1 +ZIPCLOSE:OK OK	Close TCP link.
Parameter	N: the number of TCP links and the value is 1;	

2.12.5+ZIPSTATUS：check current TCP link status

Description	This command is used to check the status of current TCP link.	
Syntax	AT+ZIPSTATUS=<N>	
Example	AT+ZIPSTATUS=1 +ZIPSTATUS: ESTABLISHED OK	Check the current TCP link status
Parameter	ESTABLISHED: TCP link established. DISCONNECTED: TCP link disconnected.	

2.12.6 +ZIPRECV: receive data from current data link

Description	This command is used to receive data asynchronously.	
Syntax	+ZIPRECV:N,LEN,<DATA>	
Example	…… +ZIPRECV:1,5,abcde ……	…… Received 5 data abcde from No.1 TCP data link
Parameter	N: the number of TCP links and the value is 1; LEN: length of received data; DATA: received data	

2.13 UDP Link Commands

2.13.1+ZIPSETUPU: set up UDP server link

Description	This command is used to bundle with the UDP server link.	
Syntax	AT+ZIPSETUPU=<N>,<IP>,<M>	
Example	AT+ZIPSETUPU=1,61.144.216.219,2332 OK	The UDP server's bundled address is 61.144.216.219, with the port no. 2332. Return with bundling succeeded.
Parameter	N: the channel No. of UDP links, ranging from 0 to 4; support 5 UDP links with 5 different IP addresses and ports; IP: IP address of target server; *.*.*.*. * ranges from 0～255. M: port number.	
Remarks	MTK only supports 6 sockets online at the same time. The total number of TCP and UDP links can't exceed 6 when establishing the links.	

2.13.2+ZIPSENDU: send data to UDP server

Description	This command is used to send data to the bundled UDP server.	
Syntax	AT+ZIPSENDU= port, length<CR> Send data after prompt with '>'.	
Example	AT+ZIPSENDU=1,10 >abcdefghij +ZIPSNEDU:OK OK	Send data to UDP server after successfully connecting the server. Send 10 bytes: abcdefghij
Parameter	port: the channel number of UDP links; length: data length (support up to 1000 bytes, and support 0x00~0xff transmitting).	

2.13.3+ZIPSTATUSU：check UDP status

Description	This command is used to check current UDP link status.	
Syntax	AT+ZIPSTATUSU=<N>	
Example	AT+ZIPSTATUSU=1 +ZIPSTATUSU: ESTABLISHED OK	Check the No. 1 UDP status The No. 1 UDP is in use
Parameter	ESTABLISHED: UDP already ESTABLISHED. DISCONNECTED:UDP already disconnected	

2.13.4+ZIPCLOSEU: close UDP link

Description	This command is used to close the designated UDP link.
Syntax	AT+ZIPCLOSEU=<N>

Example	AT+ZIPCLOSEU=1 +ZIPCLOSE:OK OK	Successfully close the No. 1 UDP link Prompt that the No.1 UDP link closed.
Parameter	N: the channel number of UDP links; representing the channels to be closed, ranging from 0 to 4.	

2.13.5 +ZIPRECVU: receive UDP data

Description	This command is used to receive UDP data from UDP server.	
Syntax	+ZIPRECVU:N,LEN,<DATA>	
Example	…… +ZIPRECVU:1,5,abcde ……	…… Received 5 data abcde from the No.1 UDP data link
Parameter	N: the channel number of UDP links, ranging from 0 to 4; LEN: received data length; DATA: received data; (The size of each UDP package shall not exceed 1500 bytes, otherwise, error occurs)	

2.14 Server Commands

2.14.1 +ZTCPLISTEN: set port monitoring

Description	This command is used to enable/disable port monitoring function.	
Syntax	AT+ZTCPLISTEN=<on/off>,<portNum> AT+ZTCPLISTEN?	
Parameter	On/off 1:start listening 2:stop listening portNum the listening port num If <on/off> is 2, please set this parameter as 0.	
Example	AT+ZTCPLISTEN=1,1174 OK	Monitoring port 1174
	at+ztcplisten? +ZTCPLISTEN:1,1174 OK	Check monitoring status
	AT+ZTCPLISTEN=2，0 OK	Stop monitoring
	+ZTCP(P): INCOMING CONNECT ACCEPTED	Indicating one monitoring to one external connection, and the connection is accepted.
Note	1. One port can be monitored currently, and only two connections are allowed on each port; 2. Prior to the monitoring, please firstly use AT+ZPPPOPEN to open the PPP link;	

2.14.2 +ZTCPSENDP: send data through passively opened link

Description	This command is used to send data through (monitored) passively opened link.	
Syntax	AT+ZTCPSENDP=<channel>,<n>	
Parameter	<channel>: the sign of connected client ends; <n>: the length of data to send	
Descriptions of returned value	Input AT command according to the above syntax, press carriage return to display “>”. In this case, you can input the data to transmit. When inputting (size+1) data (it can be any data, 0x0d recommended), it will trigger the transmitting process.	
Example	AT+ZTCPSENDP=10 >1234567890 +ZTCPSEND(P):OK OK	Send 10 characters through the monitored link.
Note	Prior to the use of this command, the monitored connection must be established.	

2.14.3 +ZTCPCLOSEP: close monitored connection

Description	This command is used to close the monitored connection.	
Syntax	AT+ZTCPCLOSEP=<channel>	
Descriptions of returned value	OK: connection closed ERROR: link not existed or other error	
Example	at+ztcpclosep +ZTCPCLOSEP:OK OK	Close the No.1 connection monitored
Note	Prior to the use of this command, the monitored connection must be established.	

2.14.4 +ZTCPRECV(P): receive data report

Description	This command is used to receive data report	
Syntax	+ZTCPRECV(P):<channel>,<dataLength>,data	
Parameter	Channel: upon multiple connections, mark the connection through which transmits the data. dataLength: the length of received data Data: received data	
Example	+ZTCPRECV(P):1050, 7890123456789012345678901234 5678901234567801234567890123456789012 4567890123456789012345678901 2345678901234567801234567890123456789 0123456789012345678901234567890 1234567890123456789012345678 9012345678901234567801234567890123456 7890123456789012345678901234 5678901234567890123456789012 3456789012345678901234567801234567890 1234567890123456789012345678 9012345678901234567890123456789 0123456789012345678901234567801234567 8901234567890123456789012345 6789012345678901234567801234567890123 4567890123456789012345678 9012345678901234567890123456789 0123456789012345678901234567801234567 8901234567890123456789012345 6780123456789012345678901234 5678901234567890123456789012	1050 characters received

	3456780123456789012345678901234567890123456789012345678901234567890123456789012345678901234567890123456789012345678901234567890123456789012345678901234567890123456789012345678	

2.14.5 +ZTCPSTATUSP: check passively opened link

Description	This command is used to check if there is any passively opened link.	
Syntax	AT+ZTCPSTATUSP=<channel>	
Descriptions of returned value	+ZTCPSTATUS(P):DISCONNECT One passively link not existed +ZTCPSTATUS(P):CONNECT One passively link existed	
Example	at+ztcpstatusp=0 +ZTCPSTATUS(P):DISCONNECT OK at+ztcpstatusp +ZTCPSTATUS(P):DISCONNECT OK	No passively opened link The current monitoring port does not start working.

2.14.6 +ZIPTIMEOUT: set the timeout for connecting the server & sending data

Description	This command is used to set the timeout for connecting the server and sending data as the module works as the client end.	
Syntax	AT+ZIPTIOMEOUT=<connect_timeout>,<send_data_timeout>	
Description of parameters	connect_timeout: connection timeout; send_data_timeout: sending data timeout. If the module does not send out the data within the specified time, it might think that there is something wrong with the server or network and close the connection. (The module works as the server and client end)	
Descriptions of returned value	OK setting succeeded ERROR setting failed	
Example	AT+ZIPTIMEOUT=? +ZIPTIMEOUT:(5-120),(5-18000) OK AT+ZIPTIMEOUT=30,60 OK at+ziptimeout? +ZIPTIMEOUT:30,60 OK	Check the range of timeout value Set the timeout Check the range of current timeout

2.14.7 +ZTCPTIMEOUT: set the timeout for receiving data

Description	This command is used to set the timeout for receiving data.	
Syntax	AT+ZTCPTIMEOUT=<recv_data_timeout>	
Description of parameters	If the module does not receive the data within the specified time, it will close the connection, otherwise, the number of connections exceeds the limit, other client-ends can't be connected. The default value is 0 and it means the timeout is no needed.	
Descriptions of returned value	OK Succeeded ERROR Failed	
Example	at+ztcptimeout=? +ZTCPTIMEOUT:(0-18000) OK at+ztcptimeout=30 OK at+ztcptimeout? +ZTCPTIMEOUT:30 OK	Check the range of timeout value Set the timeout Check the range of current timeout

2.15 FTP Commands

2.15.1 ZFTPLOGIN: log in FTP server

Description	This command is used to log in the FPT server.	
Syntax	AT+ZFTPLOGIN=<IP>,<PORT>,<Username>,<Password>	
Description of parameters	IP: server's IP address; PORT: server's FTP port number, 21 by default （Note: according to RFC959, it's advised to set the port number as 21） Username: username used to log in FTP server Password: password used to log in FTP server	
Example	at+zftplogin=183.37.36.5,21,test,test OK +ZFTPLOGIN:OK at+zftplogin=218.18.232.161,21,test,test FTP IS LOGIN	Logged in FTP server successfully Already logged in, prompt with logged in
	at+zftplogin=183.37.36.5,21,test,test OK +ZFTPLOGIN: CONNECT FAIL	Log in FTP server, connection timeout
Remarks	1. As long as the syntax of command is correct, return OK. However, this doesn't mean logged-in successfully. The log-in is successful only after +ZFTPLOGIN: OK is returned. 2. Prior to logging in FTP server, you must open PPP.	

2.15.2 ZFTPTYPE: set FTP file type

Description	This command is used to set the type of FTP file.	
Syntax	AT+ZFTPTYPE=<TYPE>	
Description of parameters	TYPE: file type 1: ASCII 2: Binary	
Example	at+zftptype=1 OK +ZFTPTYPE:OK	Set the file type as text mode
	at+zftptype?	Check the settings of file

	+ZFTPTYPE:1	type
Remarks	If you upload or download the files for the first time, you have to set the file type and perform relevant operation. If you need not change the file type, you can ignore the settings.	

2.15.3 ZFTPUPLOAD: upload files

Description	This command is used to upload files to FTP server.	
Syntax	AT+ZFTPUPLOAD=<dir&filename>,<put_mode>,<size>	
Description of parameters	dir&filename: file directory or file name put_mode: Upload operation mode: 1: STOR mode: create the file on the server and write the data. If the file exists already, cover the original file. 2: APPE mode: if the file doesn't exist on the server, create it. If it exists, attach the data at the end of the file. Size: size of file;	
Example	at+zftpupload=test1.txt,2,511 > OK +ZFTPUPLOAD:OK	Upload a txt file to the server with the file's name test1.txt and size of 511 bytes.
Remarks	The data length sent each time does not exceed 4K byte. If you want to write a large file, use STOR mode and then APPE mode; Prior to the uploading, you'd better set the file type.	

2.15.4 ZFTPDNLOAD: download files

Description	This command is used to download files from FTP server.
Syntax	AT+ZFTPDNLOAD=<dir&filename>,<Content or Info>,<output_interval>
Description of parameters	dir&filename: file directory or file name Content or Info: specify what you want to obtain is Content or Info: 1: obtain file contents 2: obtain file or designated directory information output_interval: interval (1500 byte each time) as the module outputs through COM port. Take the value from 0～10, with the unit of second. 0 represents the default value 20ms.

Example	at+zftpdnload=test1.txt,1,4 OK +ZFTPDNLOAD:Recv Start 1234567890123456789012345678901234567890123456789012345678901234567890123456789012345678901

Example	at+zftpdel=test1.txt OK +ZFTPDEL:OK	Delete the file test1.txt on the FTP server.
Remarks	None	

2.15.6 ZFTPQUIT: quit FTP

Description	This command is used to quit the FTP server.	
Syntax	AT+ZFTPQUIT	
Description of parameters	None	
Example	at+zftpquit OK +ZFTPQUIT:OK	Quit the FTP server
	at+zftpquit FTP IS NOT LOGIN	Quitted FTP server already, execute the delay command
Remarks	None	

2.16 Transparent Transfer Command

+ZTRANSFER: Transparent transfer

Description	Transparent transmission
Syntax	AT+ZTRANSFER=<net_channel>,<mode>,<cfgt>,<cfgp>
Description of parameters	net_channel：socket connection channel number; mode：socket connection mode; value: 1 or 2; 1: UDP； 2: TCP。 cfgt: used for transparent transfer; the time spent while waiting for each package to transmit: 50-65535ms

	cfgp: the size of each package is 536-1460 during transparent transfer;	
Description of returned value	+ZTRANSFER:<net_channel> OK	

Example	**1. TCP example：**
	
	at+zpppopen
	
	+ZPPPOPEN:CONNECTED
	
	OK
	at+zipsetup=1,183.37.41.143,6800
	
	+ZIPSETUP:CONNECTED
	
	OK
	at+ztransfer=1,2,3000,1000
	
	+ZTRANSFER:1
	
	OK
	ATO
	
	Enter into data mode, please input data:
	
	OK
	abcabcabcabcabcabcabcabacabcabcabcabcabc
	+++
	Enter into cmd mode, please input AT command:
	
	at
	
	OK
	
	2. UDP example:
	at+zpppopen
	
	+ZPPPOPEN:CONNECTED
	
	OK
	at+zipsetupu=1,183.37.32.104,7000
		//open PDP connection
		
		/
		/establish TCP connection
		
		//execute transparent transfer
		
		//enter data mode
		
		//transmitted data
		//enter command mode
		
		// open PDP connection
		
		// establish UDP connection

	+ZIPSETUPU:CONNECTED
	
	OK
	at+ztransfer=1,1,1000,1000
	
	+ZTRANSFER:1
	
	OK
	ATO
	
	Enter into data mode, please input data:
	
	OK
	3abcabcabcabcabcabcabcabacabcabcabcabcabc
	+++
	
	Enter into cmd mode, please input AT conmmand:
	
	at
	
	OK
		//execute transparent transfer
		
		// enter data mode
		
		// transmitted data
		//enter command mode

Remarks	The overall size of data transmitted through transparent transfer should not exceed 4096M bytes, while the data size transmitted at a time should not exceed 2K, and the interval for data input should not be too short (better make sure the rate of input data is large than 1 k/s), otherwise it might cause data loss. As t he echo display of transmitted data is incorrect, it means there is data loss. In order to avoid data loss, it's advised to use the command +IFC to enable flow control while transmitting data; when receiving data under UDP mode, the size of data transmitted by the server at a time can't exceed 2k, but the overall size of data transmitted by the server is unlimited. When using +++ for data mode, you'd better input +++ all together, and make sure the input interval is not too long; otherwise, +++ might be sent out as data. However, +++ actually means data mode. The transparent transfer won't be used with other common TCP UDP port at the same time.	

2.17 Relevant Audio Commands

2.17.1 +ZCALLTONE: set pick-up tone

Description	Play/pause the pick-up tone.	
Syntax	AT+ZCALLTONE=<n> AT+ZCALLTONE=? AT+ZCALLTONE?	
Parameter	<n> 0：pause the pick-up tone 1：play 400Hz pick-up tone 2：play 400Hz/25Hz pick-up tone 3：play 400Hz/50Hz pick-up tone	
Descriptions of returned value	OK +ZCALLTONE:<n> OK	
Example	AT+ZCALLTONE=2 OK at+zcalltone? +ZCALLTONE:2 OK AT+ZCALLTONE=0 OK at+zcalltone? +ZCALLTONE:0 OK	Play pickup tone Stop pickup tone

2.17.2 +ZDTMFTONE: set ZDTMF tone

Description	Set the pick-up tone.
Syntax	AT+ZDTMFTONE=<n>,<Duration> AT+ZDTMFTONE =? AT+ZDTMFTONE?
Parameter	<n> 0~9：play DTMF tone from 0 to 9; 10~13：play DTMF tone from A to D; 14：play * DTMF tone; 15：play # DTMF tone; 16：stop playing DTMF tone ; <Duration> DTMF playing duration, unit: 20ms. Value range: 0-1000. Set as 0, continue to play
Descriptions of	OK

returned value	+ZDTMFTONE:<n>，<Duration> OK	
Example	AT+ZDTMFTONE=1,0 OK AT+ZDTMFTONE? +ZDTMFTONE:1,0 OK AT+ZDTMFTONE=16,0 OK AT+ZDTMFTONE? +ZDTMFTONE:16,0 OK AT+ZDTMFTONE=2,100 OK	Continue to play DTMF tone of number key 1; Stop playing DTMF tone Play DTMF tone of number key 2 for 2s;

2.17.3+SPEAKER: audio channel switch command

Description	This command is used to switch between the microphone and headset.	
Syntax	AT+SPEAKER=<mode>	
Example	AT+SPEAKER=0 OK	Switch to microphone
	AT+SPEAKER=1 OK	Switch to headset
	AT+SPEAKER=? +SPEAKER:(0-1) OK	Check status
Parameters	<mode> 0：microphone(default) 1：headset	

2.17.4 +ZMICGB: set MIC audio parameters

Description	This command is used to change MIC input channel's audio parameters.
Syntax	AT+ZMICGB=<Gain>,<Bias>,<PGA> //set parameters AT+ZMICGB=? //check parameter setting syntax AT+ZMICGB? //check current parameters
Parameter	Refer to the definitions of three parameters in MIC output circuit in figure 1. 1. Gain:0～7. refer to the corresponding relationship between the parameter and the gain; typedef enum L1BbcMicGainTag

	{
	MIC_GAIN_0 = 0,
	MIC_GAIN_1,
	MIC_GAIN_2,
	MIC_GAIN_3,
	MIC_GAIN_4,
	MIC_GAIN_5,
	MIC_GAIN_6,
	MIC_GAIN_7
	}
	L1BbcMicGain;	

Descriptions of returned value	OK：parameter settings succeeded; ERROR：incorrect parameter syntax	
Example	AT+ZMICGB=0	Note: Gain=0;

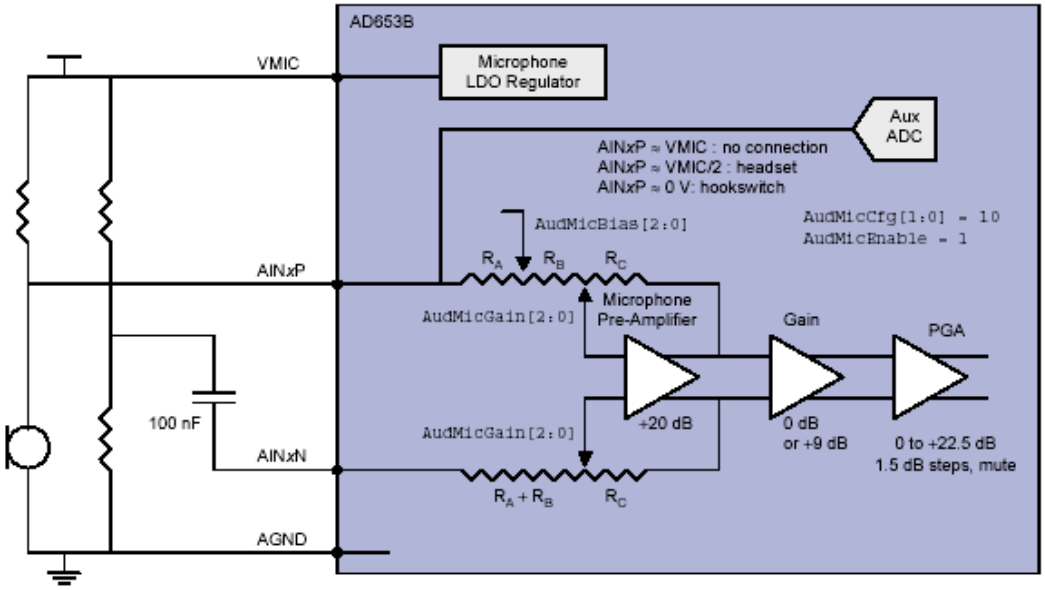

Figure 1

3 Application Cases and Precautions

3.1 SMS Application Case

Note: The inputs are marked in red:

at+cmgf=1

OK

——Set the message's input mode as text mode.

at+cmgs="13360504647"<CR>

hallo<ctrl/Z>

+CMGS: 1

OK

——Send one message. "13360504647" is the number of message recipient, and hallo is the message text.

at+cmgw="13360504647"<CR>

goodbye<ctrl/Z>

+CMGW: 1

OK

——write a message in "SM"."13360504647" is the number of message recipient, and goodbye is the message text. From the returned information +CMGW, we could see that the message is saved to the index 1.

at+cpms?

+CPMS: "SM",1,50,"SM",1,50,"SM",1,50

OK

——Check the current memory. From +CPMS, we know there is a message in "SM", which is the newly composed message.

at+cmgr=1

+CMGR: "STO UNSENT","13360504647",

goodbye

OK

——Read this message with the index No. From the returned information +CMGR, we know that the message is not sent.（" STO UNSENT "）.

at+cmss=1

+CMSS: 1

OK

——Send the saved message.

at+cmgr=1
+CMGR: "STO SENT","13360504647",
goodbye

OK
——Read this message with the index No. From the returned information +CMGR, we know that the message has been sent.（" STO SENT "）

at+cnmi=3,2,0,0,0
OK
——Set the status of newly received message as “Directly display but not save”
+CMT: "+8615986672056","OK","07/08/27,13:23:56+32"
WESDDR

——Receive a new message, which is directly displayed but not saved. "+8615986672056" is the number of message recipient, "07/08/27,13:23:56+32" is the sending time and WESDDR is the message text.

at+cnmi=3,1,0,0,0
OK
——” Set the status of newly received message as “Save but not display”

+CMTI: "SM", 28

——Receive a new message, which is saved but not displayed. From +CMTI, we know that the message is saved in the index 28 in “SM”.

at+cmgr=28
+CMGR: "REC UNREAD","15986672056","07/08/27,13:36:48+32"
CDFF

OK
——Read this message with the index No. "REC UNREAD" is the status of the message.
"15986672056" is the number of message recipient, "07/08/27, 13:36:48+32" is the sending time and CDFF is the message text.

3.2 Phonebook Application Case

Note: The inputs are marked in red:
at+cpbs?
+CPBS:"SM",0,200

OK
——Check the current memory. The default phonebook memory is" SM ". From +CPMS, we know that the current phone memory “SM” is empty.

at+cpbw= 1,"13086672098",129,"john"
OK
——Write a phone entry into current phonebook memory “SM”. “1” represents save by auto searching space. "13086672098" is the telephone number, 120 is the type of phone number, and john is the name.
at+cpbs?
+CPBS:"SM",1,200

OK
——Check the current memory. From +CPMS, we know that the entry has been stored at the index 1 in the current phone memory “SM”.
at+cpbr=1
+CPBR: 1,"13086672098",129,"john"
OK
——Read the phonebook entry.

atd>1;
OK
——Dial the index number in the current phonebook.

atd>"john";
OK
——Dial the name from the current phonebook.

ath
OK
——Use ATH to hang up the call.

at+cpbs=" ME "
OK
——Select "ME" phonebook memory.

at+cpbs?
+CPBS: "ME",0,18
OK
——Check the current memory. From +CPMS, we know that the current phone memory “ME” is empty.

at+cpbw= 1,"13086672098",129,"john"
OK
——Write a phone entry into the current phonebook memory “ME”. “1” represents save by auto searching space. "13086672098" is the telephone number, 129 is the type of phone number, and john is the name.
at+cpbs?
+CPBS:"ME ",1,18

OK

——Check the current memory. From +CPMS, we know that the entry has been stored at the index 1 in the current phone memory “ME”

at+cpbr=1
+CPBR: 1,"13086672098",129,"john"
OK
——Read this phonebook entry.

Mouser Electronics

Authorized Distributor

Click to View Pricing, Inventory, Delivery & Lifecycle Information:

SparkFun Electronics:

CEL-13120