SADDLE BAG SUPPORT

Accessory Name	Parts Number	Application Model	Issue Date	Publication No.
LEFT SADDLE BAG SUPPORT	08L73-MLA-J01	CMX1100A/D	2021.03	MII 17667
RIGHT SADDLE BAG SUPPORT	08L72-MLA-J01			
LEFT SADDLE BAG SUPPORT (AC/CM)	08L73-MLA-A01			
RIGHT SADDLE BAG SUPPORT (AC/CM)	08L72-MLA-A01			

Introduction
ALL INFORMATION, ILLUSTRATIONS, DIRECTIONS AND SPECIFICATIONS INCLUDED IN THIS PUBLICATION ARE BASED ON THE LATEST PRODUCT INFORMATION AVAILABLE AT THE TIME OF APPROVAL FOR PRINTING. Honda Motor Co., Ltd. RESERVES THE RIGHT TO MAKE CHANGES AT ANY TIME WITHOUT NOTICE AND WITHOUT INCURRING ANY OBLIGATION WHATSOEVER. NO PART OF THIS PUBLICATION MAY BE REPRODUCED WITHOUT WRITTEN PERMISSION. THIS MANUAL IS WRITTEN FOR PERSONS WHO HAVE ACQUIRED BASIC KNOWLEDGE OF MAINTENANCE ON Honda MOTORCYCLES, MOTOR SCOOTERS OR ATVS.

Honda Dealer:
Please give a copy of these instructions to your customer.

Customer:
To install this accessory requires specialized knowledge, special tools and equipment. It is recommended to have a Honda dealer install this accessory.

How To Read These Symbols
Your safety, and the safety of others, is very important. To help you make informed decisions we have provided safety messages and other information throughout this manual.

⚠ **WARNING**	You CAN be KILLED or SERIOUSLY HURT if you don't follow instructions.
⚠ **CAUTION**	You CAN be HURT if you don't follow instructions.
NOTICE	The purpose of this message is to help prevent damage to your vehicle, other property, or the environment.
NOTE	Things you want to know, things that are useful to know.
	Follow the instructions of the Service Manual.
	Follow the other symbol instructions of the "Installation Instructions BASIC".

Instruction Other Symbols
The symbols used throughout this instructions show specific service procedures.
Refer to "Installation Instructions BASIC" for description of each symbol.

INFORMATION

⚠ CAUTION

- To prevent burns, allow the engine, exhaust system, radiator, etc., to cool before installing the accessory.

NOTICE

- *Take care not to damage the painted surfaces of the motorcycle.*

NOTE:

- Save all removed parts unless otherwise indicated.

© Honda Motor Co., Ltd. 2021

PARTS LIST

When the instruction manual and installation instructions are included in this kit, be sure to give them to the customer.

< LEFT SADDLE BAG SUPPORT >

Component	No.	Parts Name	Qty	Parts No.
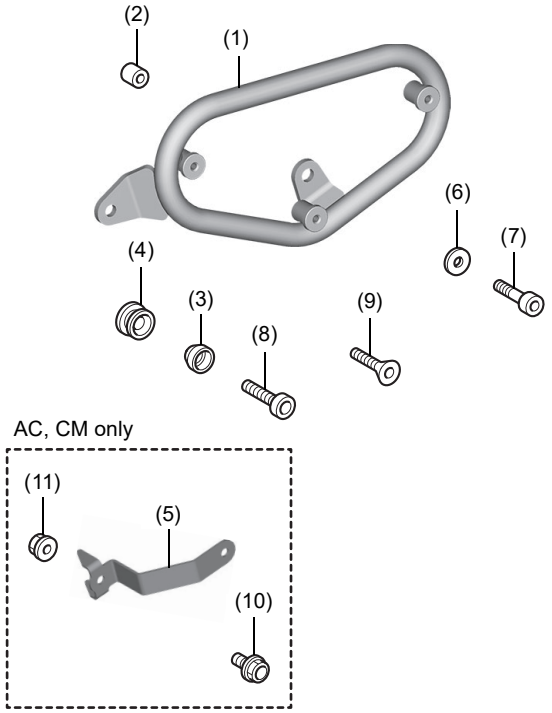	(1)	Left bag support pipe	1	-
	(2)	Collar	2	-
	(3)	Bolt Guide	1	-
	(4)	Guide	3	-
	(5)	Rear reflector stay	1	-
	(6)	Washer	2	-
	(7)	8 mm socket bolt (8×40 mm)	2	-
	(8)	5 mm head socket bolt (6×20 mm)	1	-
	(9)	4 mm head socket bolt (6×20 mm)	2	-
	(10)	6×12 mm flange bolt	1	96300-06012-07
	(11)	6 mm flange nut	1	94050-06070

< RIGHT SADDLE BAG SUPPORT >

Component	No.	Parts Name	Qty	Parts No.
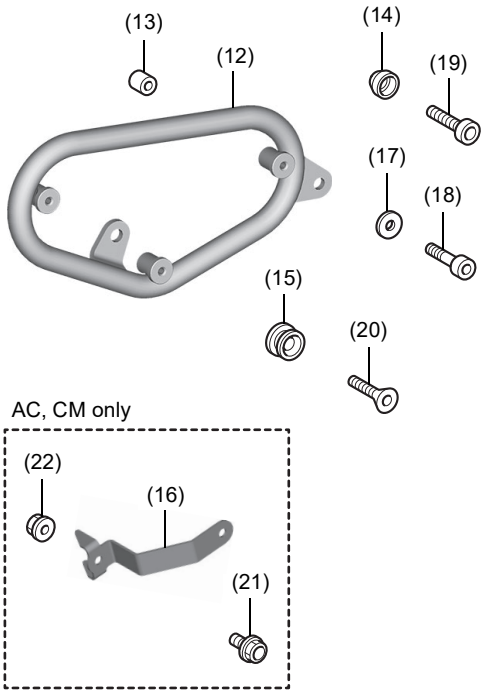	(12)	Right bag support pipe	1	-
	(13)	Collar	2	-
	(14)	Bolt Guide	1	-
	(15)	Guide	3	-
	(16)	Rear reflector stay	1	-
	(17)	Washer	2	-
	(18)	8 mm socket bolt (8×40 mm)	2	-
	(19)	5 mm head socket bolt (6×20 mm)	1	-
	(20)	4 mm head socket bolt (6×20 mm)	2	-
	(21)	6×12 mm flange bolt	1	96300-06012-07
	(22)	6 mm flange nut	1	94050-06070

© Honda Motor Co., Ltd. 2021

< LEFT SADDLE BAG (LARGE) > (SOLD SEPARATELY)

Component	No.	Parts Name	Qty	Parts No.
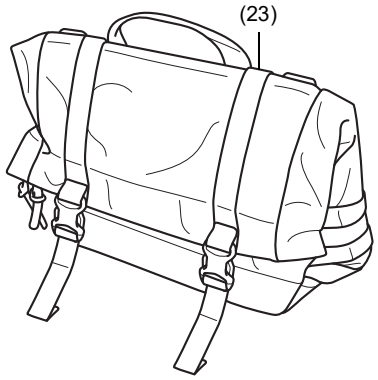	(23)	Left saddle bag (large)	1	-

< RIGHT SADDLE BAG (SMALL) > (SOLD SEPARATELY)

Component	No.	Parts Name	Qty	Parts No.
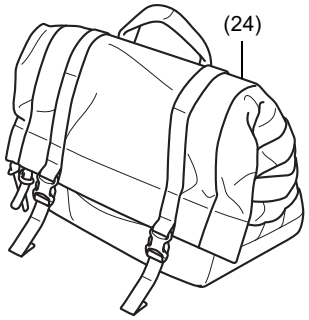	(24)	Right saddle bag (small)	1	-

MAXIMUM LOADING CAPACITY

- The weight of the cargo must not exceed the following maximum loading capacity:

Maximum Loading Capacity	
Left saddle bag	3.0 kg (6.6 lb)
Right saddle bag	3.0 kg (6.6 lb)

TORQUE INFORMATION

Refer to the Service Manual for the torque values including standard torque of the removed parts. (📖)

INSTALLATION

1.	Refer to the Service Manual for the motorcycle, remove the motorcycle parts as shown. (📖) • Repeat on the right side.

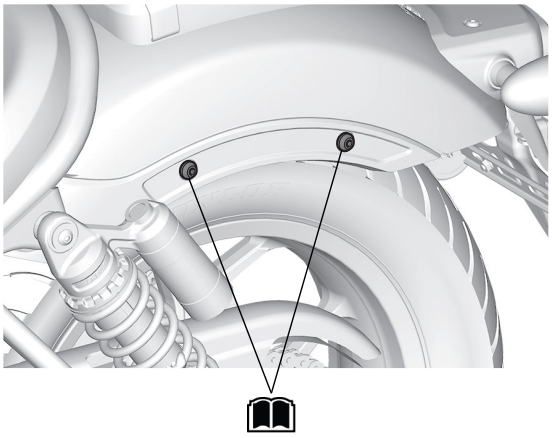

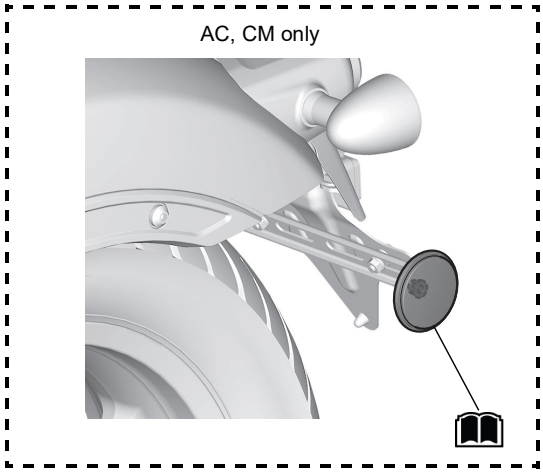

INSTALLATION IMAGE

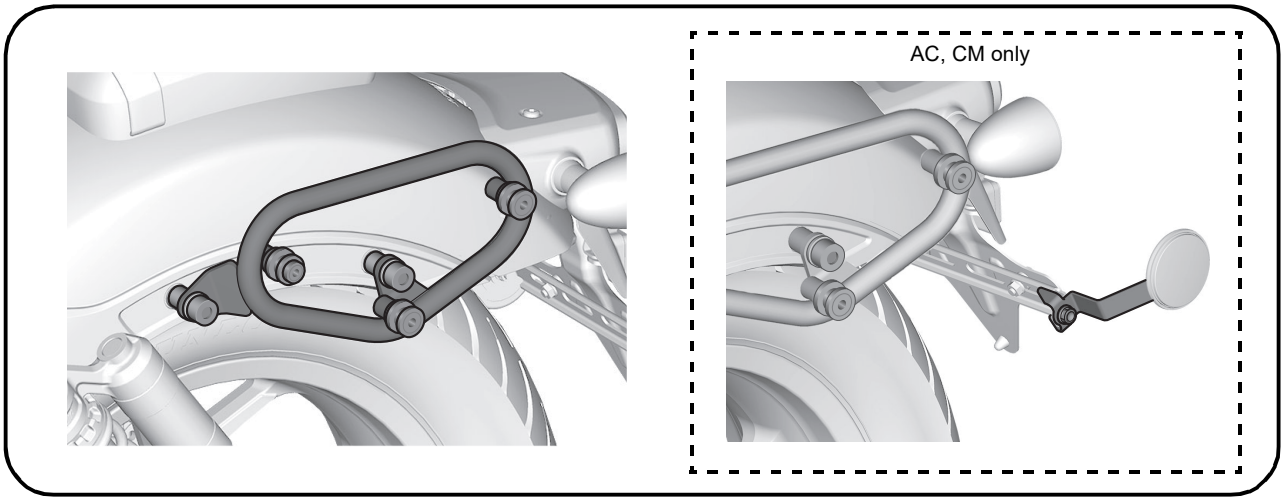

2.	Install as shown.

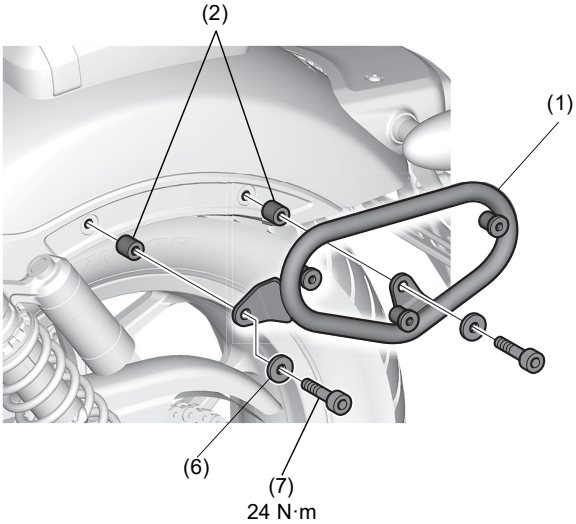

3.	Install as shown.

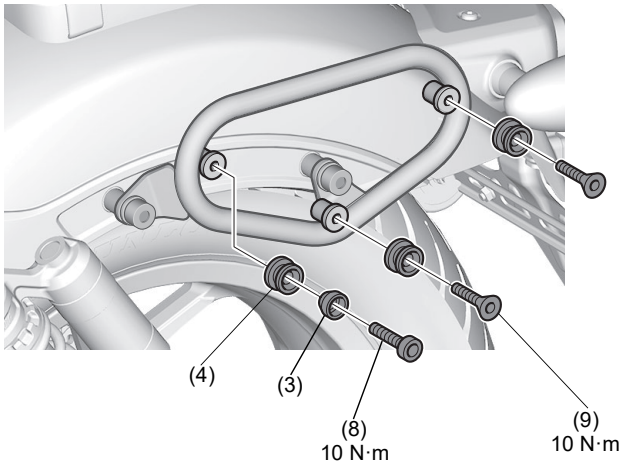

4.	Install as shown. (AC, CM only)

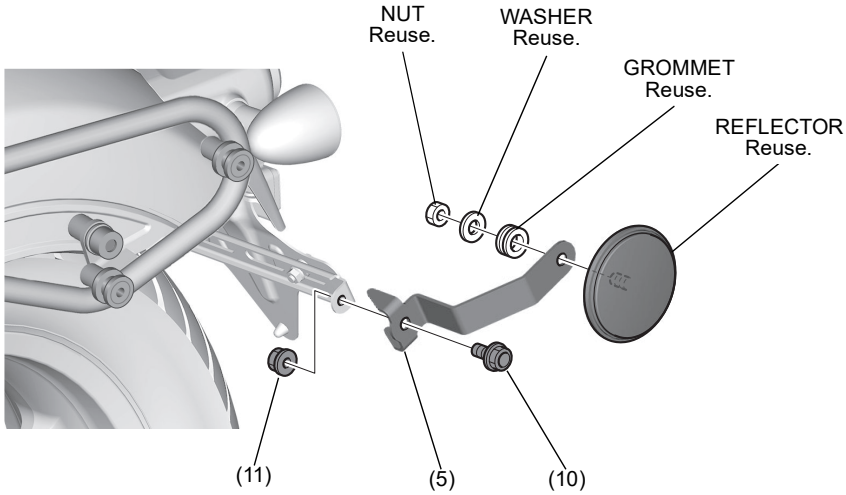

5.	Install the right saddle bag support in the same manner as the left side.

6.	Refer to the Instruction Manual for saddle bag or the Genuine Accessory Instruction Manual, install the saddle bags.

© Honda Motor Co., Ltd. 2021