# NIS-09C 烟雾传感器说明书

本离子室烟雾传感器是日本 NEMOTO 公司专为检测烟雾而精心设计的新型传感器。

**1.检测方式：** 离子型，一源两室。

**2.放射源：** 放射元素：镅 241
放射量：平均 33.3KBq.=0.9uCi(29K——37KBq)

**3.工作环境：** 电源电压：DC6.0-18.0V 最大 24V
温度：0—50℃ 最大-10——60℃ 温度 95%
保存温度：-25—80℃ 温度 95%

**4.外型尺寸：** 外型：如图所示 尺寸 22.0×42 重量 12g

**5.典型特性参数：** 电源电压：DC 9V 输出电压：5.6+0.4V
电流损耗：27+3pA 灵敏度：0.6+0.1V

**6.特性参数：**

6-1 灵敏度特性：
（根据 UL217 标准 风速 0.1M/每秒 ）

| 烟雾浓度（%/英尺） | 输出电压（V） | 误差（△V） |
|---|---|---|
| 0 | 5.6±0.4 | 0 |
| 1 | 5.3±0.5 | 0.3±0.1 |
| 2 | 5.0±0.5 | 0.6±0.1 |
| 3 | 4.7±0.5 | 0.9±0.2 |
| 4 | 4.4±0.5 | 1.2±0.2 |
| 5 | 4.2±0.5 | 1.4±0.2 |

6-2 电源电压特性（25℃.60%RH）

| 电源电压 | 输出电压（V） |
|---|---|
| 6 | 3.3±0.3 |
| 9 | 5.6±0.4 |
| 12 | 8.0±0.7 |
| 15 | 10.0±0.85 |
| 18 | 13.0±1.0 |

6-3 温湿度特性：

温度特性（温度：60%）

| 温度（℃） | 输出（V） |
|---|---|
| 0 | 5.15±0.4 |
| 25 | 5.6±0.4 |
| 50 | 5.85±0.4 |

温度特性（温度：25℃）

| 温度（%C） | 输出（V） |
|---|---|
| 30 | 5.75±0.5 |
| 60 | 5.6±0.4 |
| 90 | 5.45±0.4 |

**7.长期稳定性测验**

| 名称 | 方法 | 标准 |
|---|---|---|
| 高温储存特性 | 高温 80℃±5 不通电的情况下储存 72 小时 | 保持特性参数不变，不变形、不变色、不产生裂纹 |
| 低温储存特性 | 低温-300℃±5 不通电的情况下储存 72 小时 | 保持特性参数不变，不变形、不变色、不产生裂纹 |
| 高湿储存特性 | 在 40℃±5，85±5%RH 不通电的情况下储存 72 小时 | 保持特性参数不变，不变形、不变色、不产生裂纹 |

| | | |
|---|---|---|
| 震动实验 | 共振频率 10-35HZ，振幅 5HZ0.25，如果不产生共振，则用频率 35HZ 震荡 4 小时 | 保持特性参数不变，不变形、不变色、不产生裂纹 |
| 跌落实验 | 三个不同方向把器件从 1M 高度自由落体跌落到木板上 | 保持特性参数不变，不变形、不变色、不产生裂纹 |

**8.注意事项：**

1.检测输出电压需要用 1014NM 以上阻抗的仪表或 IC 集成电路。普通的仪表会造成检测结果的不准确。

2.组装烟雾报警器的时候，不要将焊锡等 杂物误入器件离子室中，否则必须进行清洗。

3.器件的输出引线应悬空连接（一般情况下用特氟隆支持引线），因为普通的电路板会造成微小的漏电流，使检测结果不准确。

4.器件引线和 FET 及 IC 的输入引线需用环氧树脂密封，这样使湿度造成的漏电流达到最小。

5.由于器件的输出电流很小，所以器件需要屏蔽。而输入和输出部分受外界影响最大，这部分一定要进行屏蔽处理。

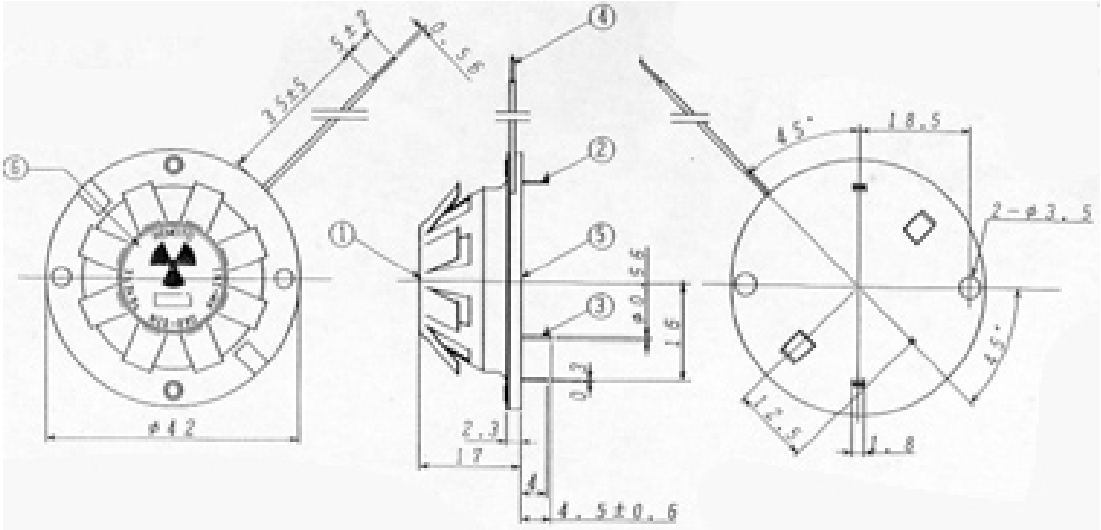


NIS-09C 外形图

地址： 深圳市福田区福华路福庆街鸿图大厦 1602 室
电话：0755-83376489 83376549 83758073 83600718
传真：0755-83376182 83338339 邮编 518033 联系人：雷建科 李卓文
手机：(0)13902971329 (0)13823648918 (0)13823648918 BP 机:191-8886648 (全国联网)
网址: http://www.sunstare.com/ E-MAIL：szsunstr@public.szptt.net.cn
北京:(0)13501189838 191-8867148 西安:(0)13609291696 191-8454356 上海:(0)13701955389 191-3789221

# NEMOTO 传感器综合技术资料

根本特殊化学株式会社

東京都杉並区上荻 1-15-1

# NEMOTO 的传感器

NEMOTO 的传感器大致可分为气体传感器和烟雾传感器。关于气体传感器根据检测气体的种类、用途、使用环境及要求测量的精度可以选择最适合的传感器，我公司有各种检测方式和检测原理的传感器。大致可以分为可燃性气体检测用的催化燃烧式，毒性气体及污浊空气等含有的复杂气体检测用的电化学式，化学性质稳定气体检测用的热传导式传感器都是我们推荐的产品。希望大家注意的是根据检测气体的浓度的不同，所推荐使用的传感器也会有所不同。

关于每种传感器的特性后边我们会进行详细介绍，为了选择检测方式，以下列出了不同气体种类和浓度的对照，请作参考来选择合适的传感器。这个对参照表毕竟是粗略的，如果使用在分类边缘附近的情况下请向弊公司咨询。

烟雾传感器由于不受浓度等的限制，后边再做有关详细介绍。

·一般性可燃气体

氢气、甲烷、丙烷、异丁烷、液化石油气、乙醇等

| 气体浓度 | 0.001% 0.01% 0.1% 1% 10% | | |
|---|---|---|---|
| 检测方式 | ← 半导体式 → | ← 催化燃烧式 → | ←热传导式→ |

·毒性气体

硫化氢、二氧化硫、氯化氢、氯气、一氧化碳等

| 气体浓度 | 0.1ppm 1ppm 10ppm 100ppm 0.1% 1% | |
|---|---|---|
| 检测方式 | ← 半导体式、电化学式 → | ←催化燃烧式→ |

污浊空气等杂气

乙醇、香烟的烟、各种臭气等

| 气体浓度 | 0.1ppm 1ppm 10ppm 100ppm 0.1% 1% | |
|---|---|---|
| 检测方式 | ← 半 导 体 式 → | ←催化燃烧式→ |

·稳定性气体

二氧化碳、氟里昂等

| 气体浓度 | 0.01% 0.1% 1% 10% | |
|---|---|---|
| 检测方式 | ← 红外线吸收式 → | ←热传导式→ |

# NEMOTO 传感器一览

| 方式 | 检测对象气体 | 型　号 | 检测浓度范围 | 特　征 |
|---|---|---|---|---|
| 催化燃烧式 | 一般可燃性气体 | ~~NAP—2A~~ | ~~0.05—5%（$CH_4$）~~<br>~~0.03—1.8%（I—Bu）~~ | ~~高性能、广谱型~~ |
| | | ~~NAP—3A~~ | ~~0.03—1.8%（I—Bu）~~<br>~~0.05—3.3%（EOH）~~ | ~~高性能、广谱型~~ |
| | | NAP—66A | 0.03—1.8%（I—Bu）<br>0.05—3.3%（EOH） | 小型、低功耗、高速应答 |
| | | NAP—66E | 0.05—3.2%（EOH） | 小型、低功耗、高速应答 |
| | | NAP—55A | 0.05—5%（$CH_4$）<br>0.03—1.8%（I—Bu） | 小型、低功耗、高速应答 |
| | | NAP—50A | 0.05—5%（$CH_4$）<br>0.05—4%（$H_2$） | 小型、低功耗、高速应答、酒精灵敏度低 |
| | 工业用一般可燃性气体 | NAP—100AM | 0.03—5%（$CH_4$）<br>0.02—1.8%（I—Bu） | 高性能、工业用 |
| | | NAP—100AC | 0.1—5%（$CH_4$）<br>0.05—1.8%（I—Bu） | 高性能、工业用 |
| | | NAP—100AD | 0.03—5%（$CH_4$）<br>0.02—1.8%（I—Bu） | 高性能、工业用、可高温下使用 |
| | 氢气 | NAP—100AH | 0.05—4% | 高性能、工业用、可高温下使用 |
| | 汽油蒸汽 | NTS—30 | 0.02—1.4%（$C_5H_{12}$） | 高性能、高识别性能 |
| | 不完全燃烧废气 | ~~NAP—70A~~ | ~~0.01—0.2%~~<br>~~（1/2$H_2$+CO）~~ | ~~高灵敏度、广谱型~~ |
| | | NAP—78A | 0.03—0.5%<br>（1/2$H_2$+CO） | 热水器用 |
| | | NAP—78R | 0.03—0.5%<br>（1/2$H_2$+CO） | 热水器用组合式 |
| 热传导式 | 二氧化碳 | NAP—21A | 2—100% | 广谱型 |
| 电化学式 | 民用一氧化碳 | NAP—505 | 0—1000ppm | 小型、高精度、高灵敏度 |
| | 工业用一氧化碳 | NAP—701 | 10—2000ppm | 高精度、高信赖性 |
| | | NAP—703 | 0—1500ppm | 突出的直线性、选择性，极高的稳定性和重复再现性 |
| | 工业用硫化氢 | NAP—720 | 0—100ppm | 突出选择性、极高稳定性和重复再现性 |
| 离子式 | 一般烟 | NIS—09C | 0.5—5%/foot * | 广谱型 |
| | | NIS—05A | 0.3—5%/foot * | 低放射源 |

*：表示减光率的单位。

# 催化燃烧式气体传感器

根本的可燃气体传感器基本上是催化燃烧式，如上所述根据用途的不同可分为很多种类。其主要用途是气体报警器，它比半导体式传感器的特性稳定，尤其它不需要特殊搭载 CPU，使用方法也几乎不存在制约。以下对其一般特性等进行介绍。

1. 基本特性
   - 对各种可燃性气体在达到 LEL 浓度范围内都几乎是直线性信号输出。特别是到达 50%LEL 之前直线性非常明显。
   - 感应气体灵敏度的重复性能非常优越，同一天内重复再现性误差在 5%以内。
   - 感应特性良好，民用机用的传感器的反应速度 90%，感应时间在 20 秒以内。
   - 周围的温湿度变化几乎不受影响，民用机不需要补正电路。
   - 个体的灵敏度差异极小，只对报警点作一致性的设定就可以调整报警浓度。
   - 通电初期达到稳定所需时间短。
   - 对电源电压的依附性小，对传感器单元端子的供电电压无需绝对稳定。

2. 持久性和长期性能
   - 到 60℃以内的高温下可以使用。
   - 高温高湿（50℃、95%RH 的程度）的环境下也可以常时间使用。
   - 高温高湿（50℃、95%RH 的程度）的环境下长期保管后基本特性也几乎不发生变化。
   - 对通常想象程度的震动、撞击显示良好的持久性。
   - 对硫化氢等毒性气体显示良好的持久性。
   - 对硅类气体（HMDS10ppm）显示良好的持久性。
   - 通过各种加速老化试验得出预测使用寿命 10 年以上。

3. 使用
   - 和半导体式的有所不同，为达到初期特性稳定完全不需要预备通电。
   - 报警器在使用时、设定报警点时只需预备通电 10 分钟就足够，并且可以在空气中调整报警浓度。
   - 温湿度变化频繁或有混杂气体存在的情况下特性几乎不受影响，所以报警浓度调整时无需要求无臭环境和恒温、恒湿环境。

4. 用途
   - 气体泄漏报警器。
   - 不完全燃烧防止用报警装置。
   - 热水器。
   - 酒精探测器、气体浓度计。
   - 加油机器。

# 电化学式传感器

近年来，新闻媒体对毒气中毒事故的报导举不胜举。根本特殊化学为了适应市场的需求，经过多年的研发、反复测试最新推出了有毒气体检测用电化学式传感器。根本的电化学式气体传感器性能优越、成本低廉，同其他公司的电化学式传感器相比占据了两大优势。

电化学式气体传感器是由发生氧化（还原）反应的检知电极，与此同時发生还原（氧化）反应的对向电极，并且与此同时用来监视检知电极的电位变化的参照电极构成。并且在动作状態下，以参照电极检出电位为基础，根据外部接续低电位制御电路，检知电极可以保持预先设定好的一定电位。

电化学式气体传感器，和从来的半导体传感器、接触燃烧式传感器相比具有以下的优越特性。

① 对于气体的浓度具有突出的直线性输出。
② 具有突出的重复再现性。
③ 对气体有突出的选择性。
④ 具有良好的灵敏特性（90%程度上应答时间都在 30 秒以内）。
⑤ 不受湿度的影响。
⑥ 大气中的输出值漂移小，可以获得稳定的输出特性。
⑦ 不具备加热源，电力消耗小，报警器可以用电池驱动。
⑧ 体积小、重量轻，可以容易地搭载到便携式机器上。
⑨ 本体构造的机械性能稳定，对落地或撞击具有极高的耐久性能。

用途：

- 气体报警器
- 火灾报警器
- 自动换气扇
- 空气质量监测器

# NAP—66A

NAP—66A 相当于前面介绍的 NAP—3A 的小型低功耗类型，和 NAP—3A 同样主要用在报警器和泄漏检测器方面。这种 66A 同 3A 相比高度约少了一半，消耗电流也控制在了一半以下，所以在设计报警器时可以实现薄型、轻便化。在此显示其基本的特性，关于详细的介绍请参阅个别的使用说明书。另外传感器的检测用推荐电路由于和 NAP—3A 相同，所以请参照 3A 项中的图。

• 检测气体对象和浓度

| 气体种类 | | 检测浓度范围 |
|---|---|---|
| 丙烷 | $C_3H_8$ | 0.03－2.2%(0.03－1%) |
| 异丁烷 | Iso-$C_4H_{10}$ | 0.03－1.8%(0.03－0.8%) |
| 氢气 | $H_2$ | 0.05－4%(0.05－1.5%) |
| 乙醇 | $C_2H_5OH$ | 0.05－3.2%(0.05－1.5%) |
| 碳化氢 | $C_nH_{2n+2}$ | 1－100%LEL(1-50%LEL) |

(　)是高精度检测可能的浓度范围

• 额定值

| 項目 | 额定值 |
|---|---|
| 印加电压 | DC 2.0±0.2V<br>AC 2.0±0.2V(实效值 50-60Hz) |
| 消耗电流<br>(2.0V 印加) | DC 140－160mA<br>AC 140－160mA(实效值 50-60Hz) |
| 周围温度 | 使用时 －10 － +50℃<br>保管时 －10 － +60℃ |
| 周围湿度 | 使用时 95%RH 以下<br>保管时 99%RH 以下(不可结露) |

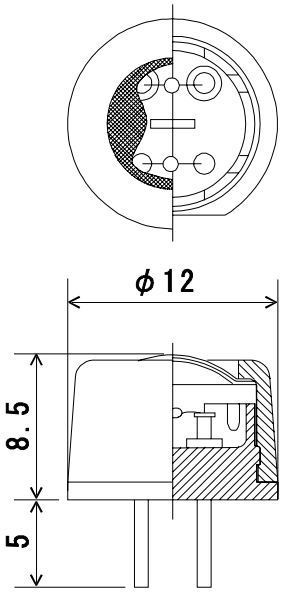


图 NAP—66A 构造和外观

• 气体的灵敏度特性

| 气体种类和浓度 | 输出值 |
|---|---|
| 洁净大气中的输出值 | －35－+35mV |
| 异丁烷 1400ppm | 10－15mV |
| 氢气 1400ppm | 7－12mV |
| 乙醇 1400ppm | 11mV 以下 |

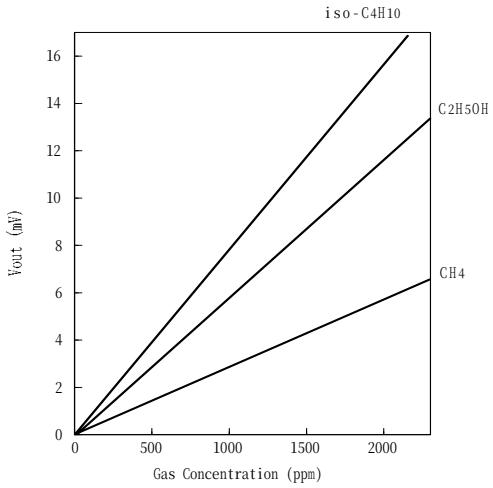


图　气体的灵敏度特性

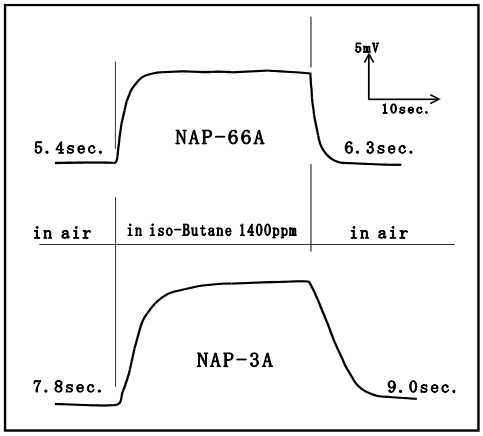


图　应答特性

# NAP—66E

催化燃烧式传感器 NAP—66E 使用简单方便的酒精传感器。其消耗电流小，并且通电初期的稳定时间短，所以用在电池驱动的酒精探测器（呼气中的酒精浓度测定器）上最适合。比过去的半导体式传感器精度高，并且具有突出的重复再现性等，能够充分实现可信度高的酒精检测器。以下对其特性等加以简要介绍。

・检测气体对象和浓度

| 气体种类 | | 检测浓度范围 |
|---|---|---|
| 乙醇 | $C_2H_5OH$ | 0－3.2%(0.05－2.0%) |

(　)是高精度检测可能的浓度范围

・额定值

| 項目 | 額定值 |
|---|---|
| 印加电压 | DC 1.8±0.1V |
| 消耗电流<br>(1.8V 印加时) | DC 140－160mA |
| 周围温度 | 使用时 －10 － +50℃ |
| 周围湿度 | 使用时 99%RH 以下 |

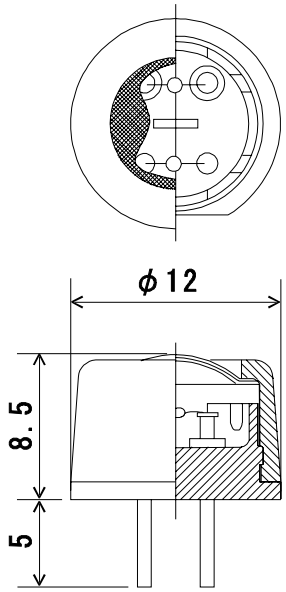


图 NAP—66E 构造和外观

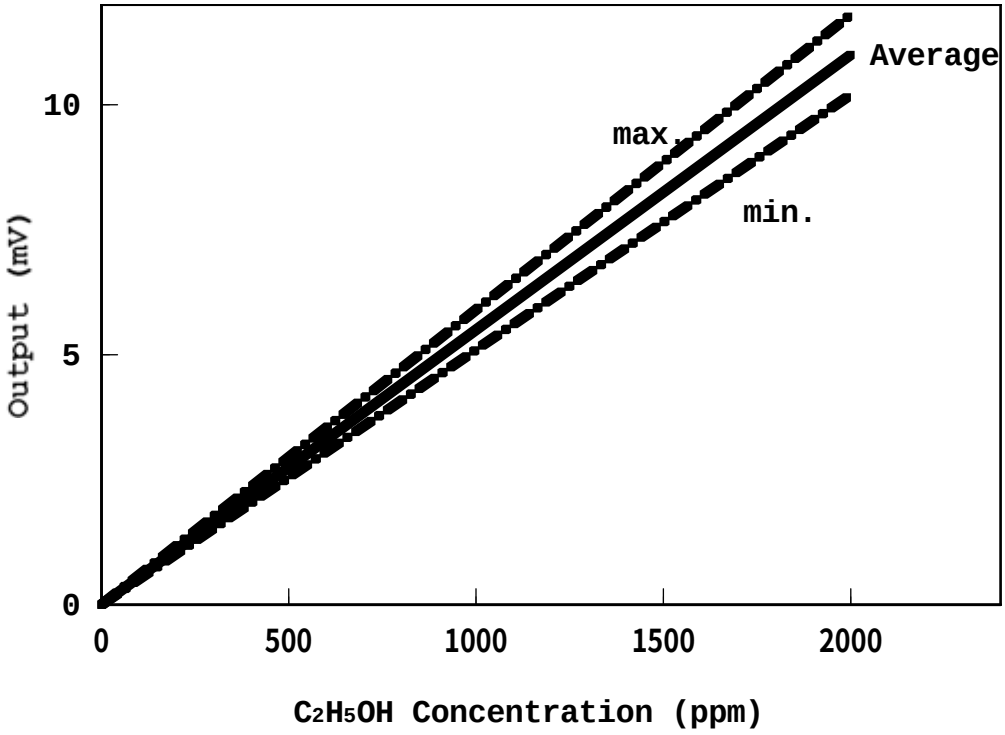


图 气体灵敏度特性

关于 NAP—66E 的推荐电路图和详细资料请另行向本公司索取。

# NAP—55A

NAP—55A 相当于前面介绍的 NAP—2A 的小型低功耗类型，和 NAP—2A 同样主要用在气体报警器方面。并且这种 55A 和 2A 相比较，由于高度约小于一半，消耗电流也控制在一半以下，所以在设计报警器时可实现薄型、轻便化。在此显示其基本特性，详细的请参阅个别使用说明书。另外传感器的推荐测定电路和 NAP—2A 的相同，所以请参照 2A 项的图。

• 检测气体对象和浓度

| 气体种类 | | 检测浓度范围 |
|---|---|---|
| 甲烷 | $CH_4$ | 0.05－5%(0.05－2%) |
| 丙烷 | $C_3H_8$ | 0.03－2.2%(0.03－1%) |
| 异丁烷 | Iso-$C_4H_{10}$ | 0.03－1.8%(0.03－0.8%) |
| 氢气 | $H_2$ | 0.05－4%(0.05－1.5%) |
| 乙醇 | $C_2H_5OH$ | 0.05－3.2%(0.05－1.5%) |
| 碳化氢 | $C_nH_{2n+2}$ | 1－100%LEL(1-50%LEL) |

(　)是高精度检测可能的浓度范围

• 额定值

| 项目 | 额定值 |
|---|---|
| 印加电压 | DC 2.5±0.25V<br>AC 2.5±0.25V(实效值 50-60Hz) |
| 消耗电流<br>(2.5V 印加) | DC 150－170mA<br>AC 150－170mA(实效值 50-60Hz) |
| 周围温度 | 使用时 －10 － +50℃<br>保管时 －10 － +60℃ |
| 周围湿度 | 使用时 95%RH 以下<br>保管时 99%RH 以下(不可结露) |

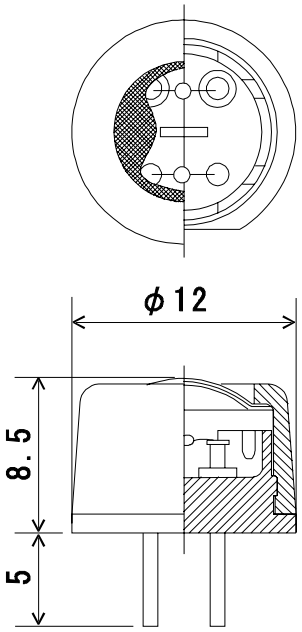


图 NAP—55A 构造和外观

• 气体的灵敏度特性

| 气体种类和浓度 | 输出值 |
|---|---|
| 洁净大气中的输出值 | －35－+35mV |
| 甲烷 3000ppm | 10－16mV |
| 异丁烷 1400ppm | 10－15mV |
| 氢气 1400ppm | 7－12mV |
| 乙醇 1400ppm | 11mV 以下 |

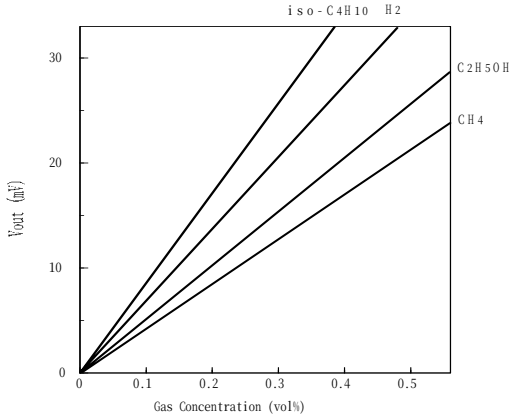


图　气体的灵敏度特性

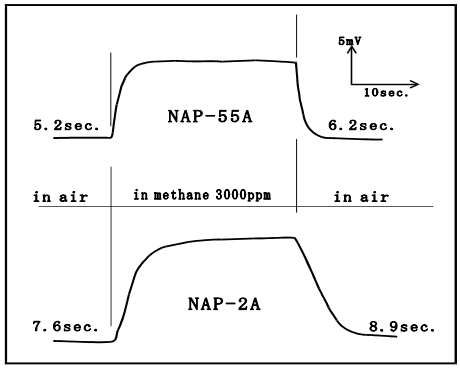


图　应答特性

# NAP—50A

NAP—50A 是和前面介绍的 NAP—55A 同样都相当于 2A 的小型低功耗类型，主要用在气体报警器方面。这种 50A 和 55A 相比对酒精的敏感度极低，具有防误报功能，所以相比较而言采用 50A 的报警器具有极高的可信度。在此显示其基本特性，详细的请参阅个别使用说明书。另外，传感器的推荐检测电路图和 NAP—2A 相同，所以请参照 2A 项。

• 检测气体对象和浓度

| 气体种类 | | 检测浓度范围 |
|---|---|---|
| 甲烷 | $CH_4$ | 0.05－5%(0.05－2%) |
| 丙烷 | $C_2H_6$ | 0.05－3.2%(0.05－1.5%) |
| 氢气 | $H_2$ | 0.05－4%(0.05－1.5%) |
| 碳化氢 | $C_nH_{2n+2}$ | 1－100%LEL(1-50%LEL) |

(　)是高精度检测可能的浓度范围

• 额定值

| 項目 | 額定值 |
|---|---|
| 印加电压 | DC 2.5±0.25V<br>AC 2.5±0.25V(实效值 50-60Hz) |
| 消耗电流<br>(2.5V 印加) | DC 150－170mA<br>AC 150－170mA(实效值 50-60Hz) |
| 周围温度 | 使用时 －10 － +50℃<br>保管时 －10 － +60℃ |
| 周围湿度 | 使用时 95%RH 以下<br>保管时 99%RH 以下(不可结露) |

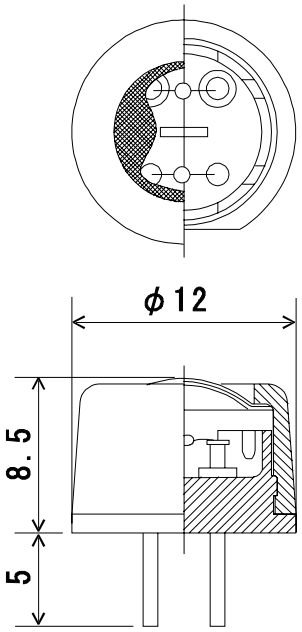


图 NAP—50A 构造和外观

• 气体的灵敏度特性

| 气体种类和浓度 | 输出值 |
|---|---|
| 洁净大气中的输出值 | －35－+35mV |
| 甲烷 3000ppm | 10－16mV |
| 氢气 1400ppm | 7－12mV |
| 乙醇 1% | 10mV 以下 |

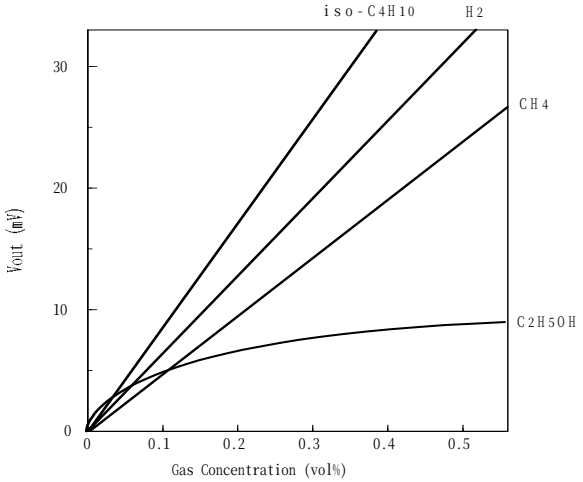


图　气体的灵敏度特性

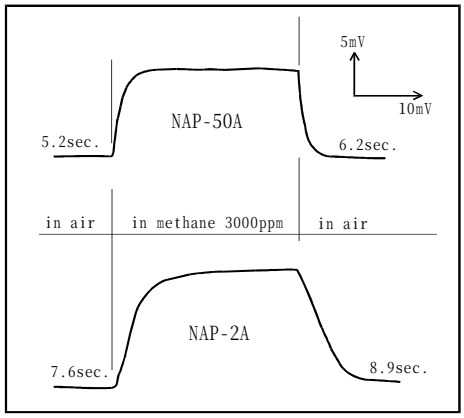


图　应答特性

# NAP—78A

NAP—78A 是各种燃烧机器的不完全燃烧检测用传感器，设置在烟道内可以直接监视燃烧机器的排气。通常这种传感器由于具有固有的温度特性，所以需要单独的补正电路，结果使价格增高，妨碍了其通用性，可是 78A 本身具备了简单的温度特性补正电路，不需要单独增加电路。并且电路部分作为附属品 NAP—78R 分开配置，用户可根据用途进行选择。

• 额定值

| 項目 | 额定值 |
|---|---|
| 附加电压 | DC 2.0±0.1 V<br>AC 2.0±0.1 V (实效值 50－60Hz) |
| 加热清洗电压 | DC 2.75±0.1V<br>AC 2.75±0.1V(实效值 50-60Hz) |
| 加热清洗频度 | 只有通电开始时需要 1 分钟 |
| 氧气浓度 | 1——21% |
| $CO/H_2$ | 1/1——1/4 |
| 消费电流<br>(2.0V 印加) | DC 140－160mA<br>AC 140－160mA(实效值 50－60Hz) |
| 周围温度 | 使用时 0——+200℃<br>保管时 －10——+50℃ |
| 周围湿度 | 使用时 95%RH 以下<br>保管时 99%RH 以下(不可结露) |

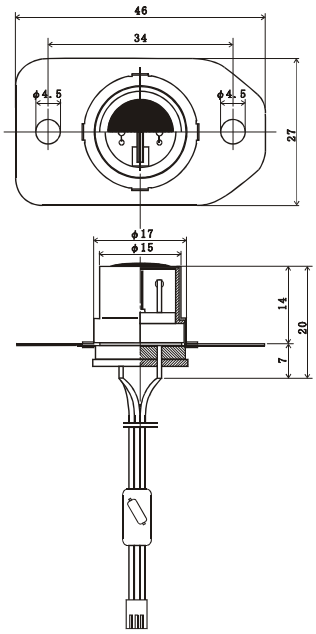


图 NAP—78A 的构造、外观

• 气体的灵敏度特性

| 气体种类和浓度 | 输出值 |
|---|---|
| 洁净大气中的输出值 | 规定值±2mV |
| CO 1000ppm + $H_2$ 500ppm | 7－9mV(常温)、5－7mV(200℃) |
| 零点温度特性 | 常温和 200℃时的零点输出变化量±1.0mV 以下 |

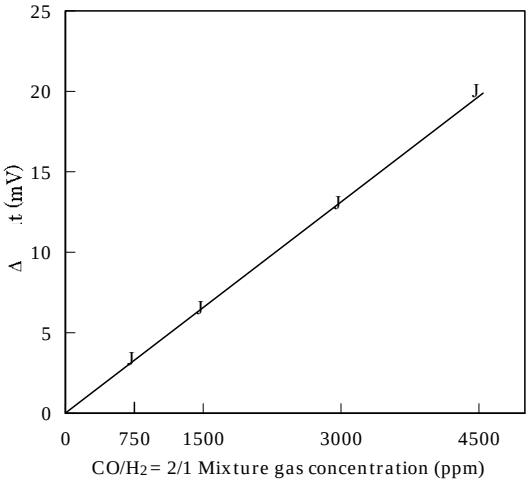


图 气体的灵敏度特性

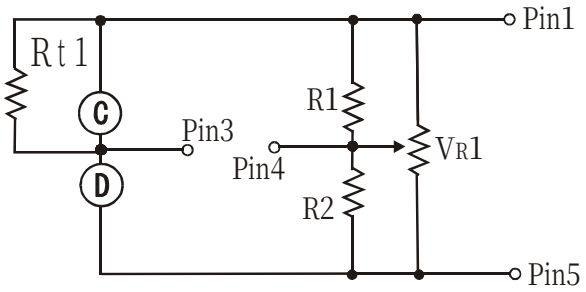


图 附属品电路图

# NAP—100 系列

NAP—100 系列是工业用可燃气体传感器，为了适应广范的用途和检测气体的种类列举了 4 种型号。详细说明请参阅单独的技术资料。

• 额定值及气体灵敏度

| 项目 | NAP－100AM | NAP－100AC | NAP－100AD | NAP－100AH |
|---|---|---|---|---|
| 印加电压 | 2.6V | 2.6V | 2.6V | 1.6V |
| 消耗电流 | 160－180mA | 160－180mA | 160－180mA | 120－140mA |
| 使用时周围温湿度 | －10－+50℃<br>95%RH 以下 | －10－+50℃<br>95%RH 以下 | ２60℃以下<br>95%RH 以下 | 260℃以下<br>95%RH 以下 |
| 保管時周围温湿度 | －20－+60℃<br>99%RH 以下 | －20－+60℃<br>99%RH 以下 | －20－+60℃<br>99%RH 以下 | －20－+60℃<br>99%RH 以下 |
| 用途 | 一般广谱型 | 高浓度检测用 | 高温用 | 氢气检测专用 |
| 检测对象气体种类 | 一般可燃性气体 | 可一般燃性气体 | 一般可燃性气体 | 氢气、CO |
| 高精度检测可能浓度 | 1－50%LEL | 3－100%LEL | 1－50%LEL | 1－50%LEL |

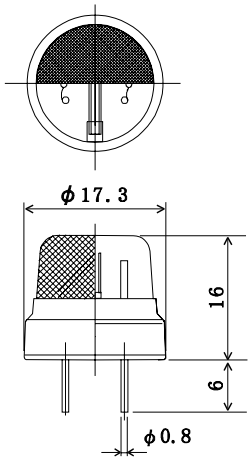


100AM 构造

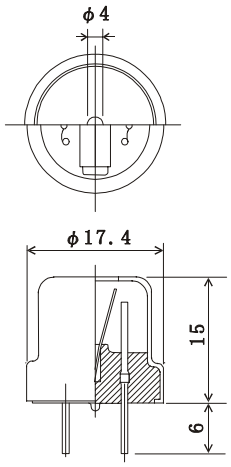


100AC 构造

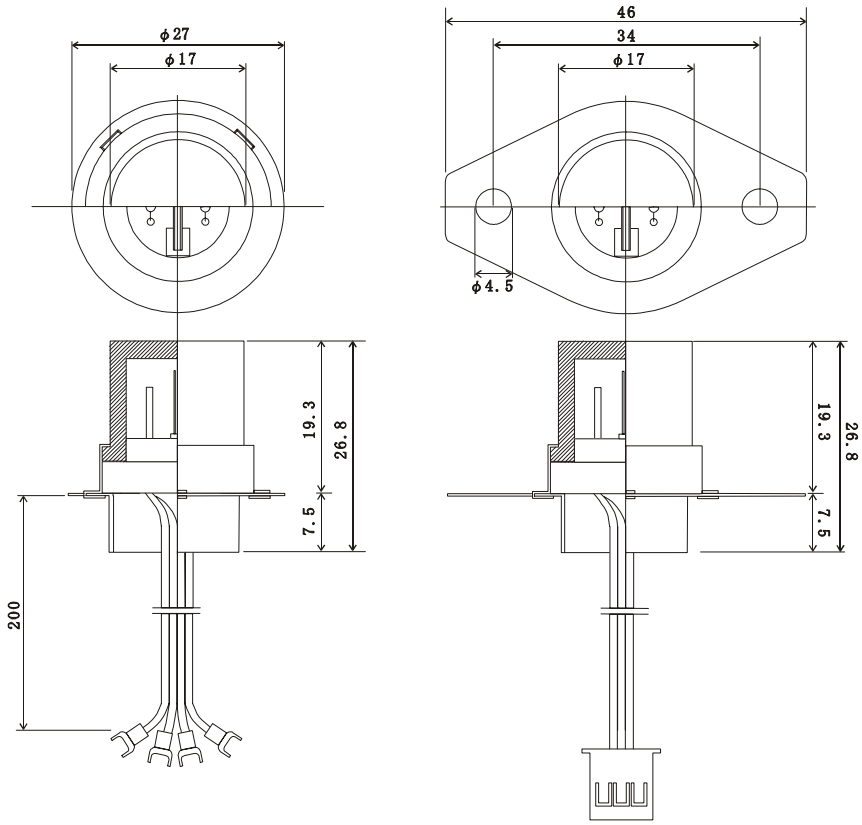


100AD、100AH 构造（可互换）

# NTS-30

NTS—30 主要是无人加油站的注油机器上使用的，用来识别汽油和柴油的传感器。这个传感器几乎在所有环境下都可以识别汽油和柴油，所以对防止错误注油极为有效。并且由于传感器本身具有高速应答性能，系统机构如能迅速将油箱内的空气输送到传感器，只需 1——2 秒钟的程度即可判定是汽油还是柴油。

• 额定值

| 项目 | 额定值 |
|---|---|
| 印加电压 | DC 1.8±0.1V　　AC 1.8±0.1V(实效值 50-60Hz) |
| 消耗电流(1.8V 印加) | DC140－160mA　　AC140－160mA(实效值 50-60Hz) |
| 周围温度 | 使用时 －30 － +60℃　　保管时 －30 － +60℃ |
| 周围湿度 | 使用時 95%RH 以下　　保管时 99%RH 以下(不可结露) |

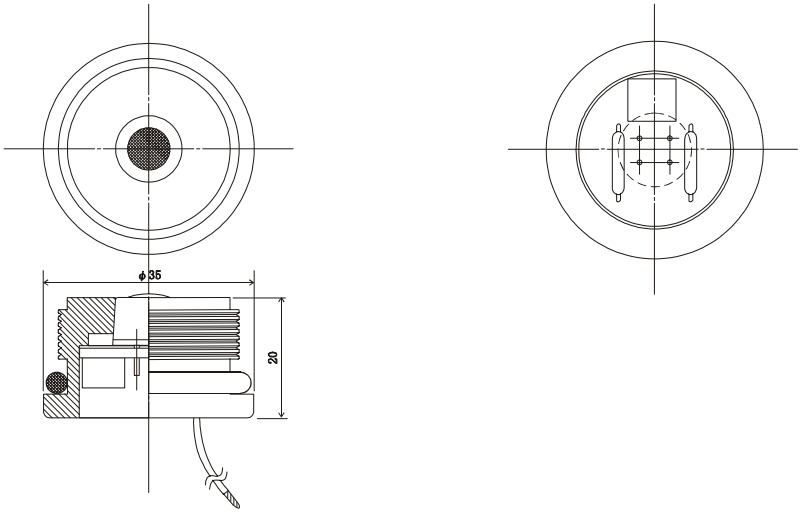


图 NTU-30 构造图

| 项目 | 输出值 |
|---|---|
| 洁净大气中的输出值 | -5.0——+5.0mV |
| 戊烷 5000ppm | 35－45mV |
| 异丙醇 5000ppm | 15mV 以下 |
| 应答時間 | 2 立升／min．的速度 5000ppm 的戊烷气体喷向传感器时，1 秒以内反应 |

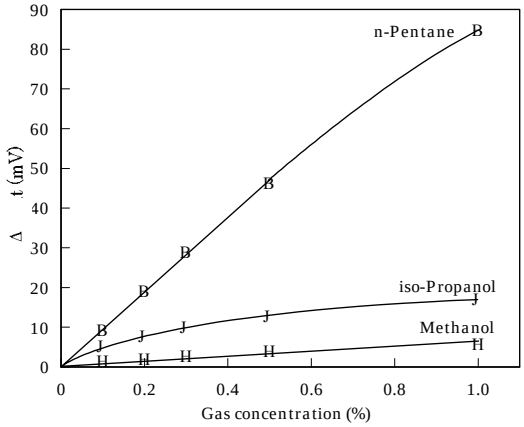


图　气体的灵敏度特性

# NAP—21A

NAP—21A 是热传导式传感器，这种传感器用于检测气体的热传导率的不同，再把检测结果显示浓度的机器。适用于百分线以上的高浓度气体和稳定性高的不活性气体检测。

• 额定值及气体灵敏度

| 项目 | 额定值 |
|---|---|
| 印加电压 | DC 1.8±0.1V |
| 消耗电流(1.8V 印加) | DC120－130mA |
| 使用时周围温度 | －10 － +50℃、95%RH 以下 |
| 保管时周围湿度 | －20 － +60℃、99%RH 以下 |
| $CO_2$ 气体灵敏度 | 0.2mV/% $CO_2$ |

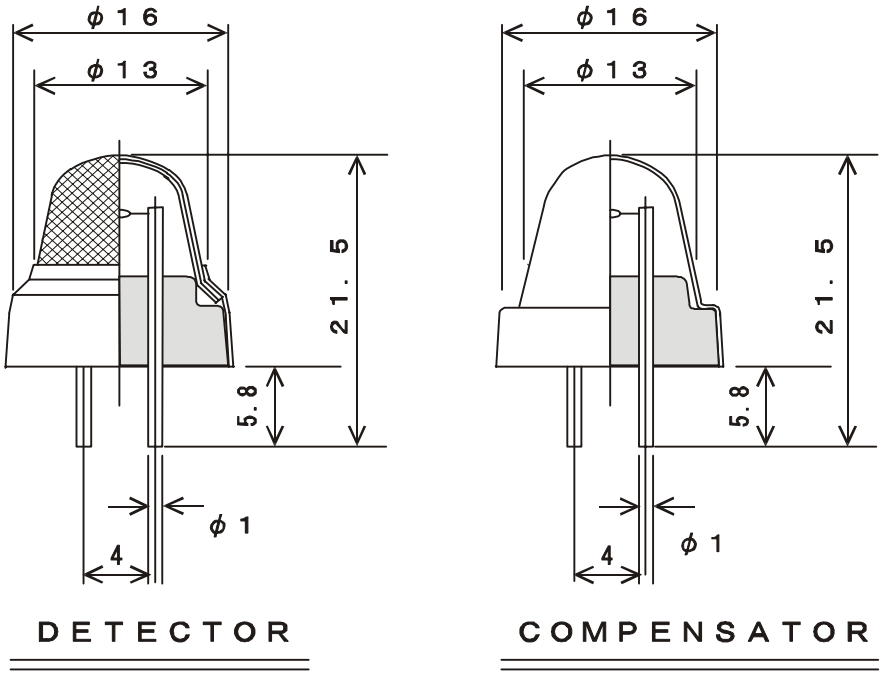


图 NAP—21A 的构造图

这种传感器在使用环境气体下的热传导率和空气不同的情况下显示输出变化，实际周围环境气体的分子量比空气大时“+”方向输出，而比空气小时向“-”方向输出变化。这种传感器的输出信号对于浓度呈现突出的直线性，可以检测至 100%浓度的气体。但是这种传感器对温湿度具有依附性（湿度即水蒸气，向“-”方向输出信号）。在实际电路设计过程中必须考虑其特性而进行补正。

由于传感器具有这种特性，所以主要适合用在恒温环境下的温室内 $CO_2$ 浓度计测，水果和蔬菜的运送船中的 $CO_2$ 浓度管理或气体管道方面的置换作业等。

# NAP—701

NAP—701 传感器是电化学式 CO 传感器，这个传感器的 CO 检测原理是具备了氧化 CO 的催化剂使 CO 氧化，与此同时产生的氢离子作为电气媒体，在电解液中从检知电极往对向电极移动，由此构成回路而产生了电流，其电流值相对于气体浓度呈现极为稳定的直线性。

• 特性

| 项目 | 特性等 |
|---|---|
| 检测气体浓度范围 | CO　0～1000ppm |
| 输出电流 | 50±10nA／ppm |
| 输出值重复再现性 | ±2%以内 |
| 反应时间 | 90%反应时间 90 秒以内 |
| 零点漂移 | 10ppm 以下(0－40℃) |
| 周围温度 | －20～＋50℃ |
| 周围湿度 | 15～90%RH |

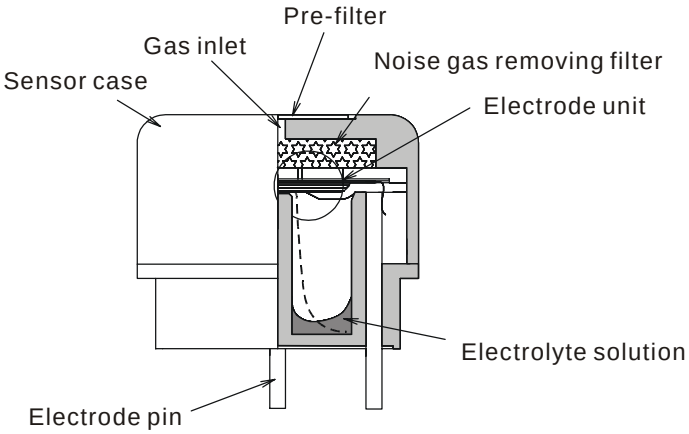


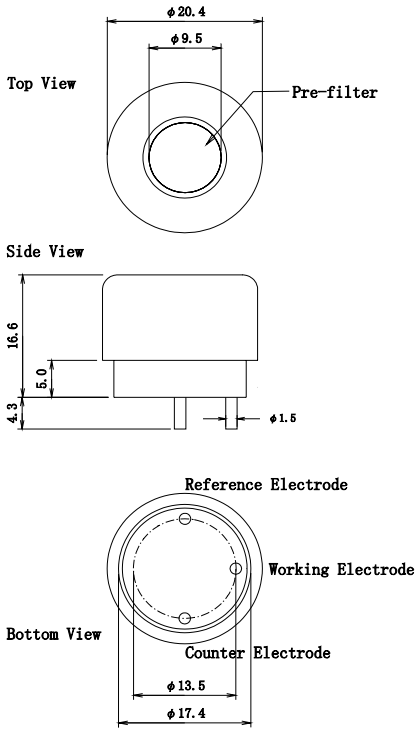


图 NAP—701 的构造

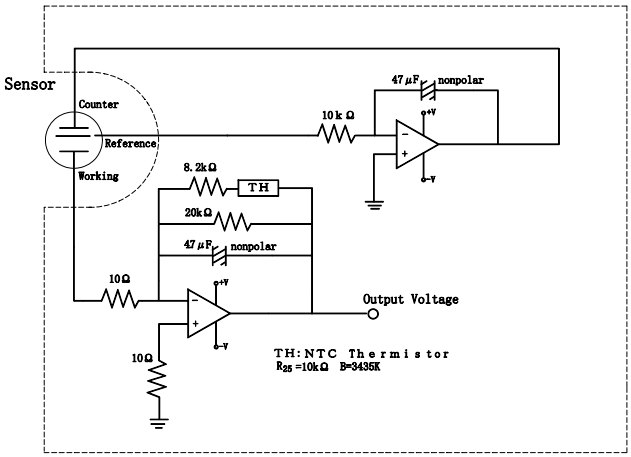


图 推荐电路图

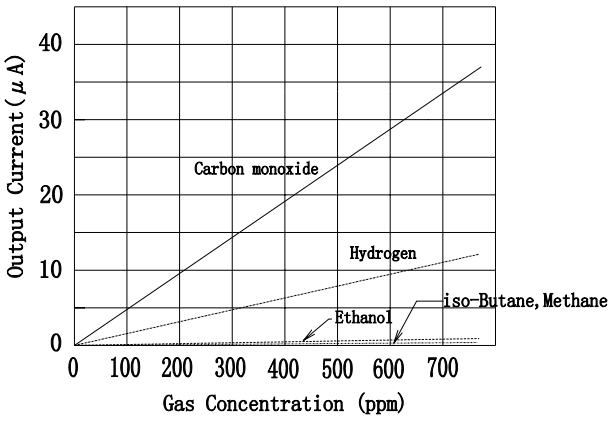


图 气体灵敏度特性

# NAP-703

NAP-703 传感器是 NAP—701 的高灵敏度改良优化产品，主要用在工业方面。这种传感器的 CO 检测原理同 NAP-701 虽然相同，但不仅其输出电流值较大，而且对气体的选择性相当优越，所以用在工业上最适合。并且对气体的感应速度迅速，所以也符合欧洲的特殊工业规格，使用用途广泛。

• 特性

| 项目 | 特性等 |
|---|---|
| 检测气体浓度范围 | CO 0～1500ppm |
| 输出电流 | 70±15nA／ppm |
| 输出值重复再现性 | ±2%以内 |
| 反应时间 | 90%反应时间 30 秒以内 |
| 零点漂移 | 5ppm 以下(0－40℃) |
| 周围温度 | －20～＋50℃ |
| 周围湿度 | 15～90%RH |

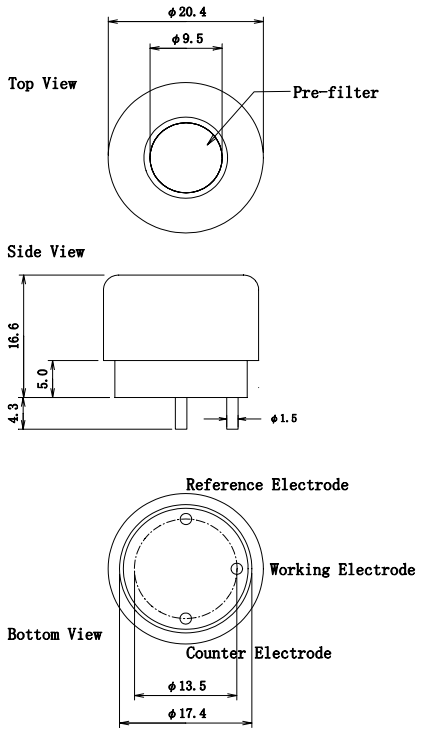


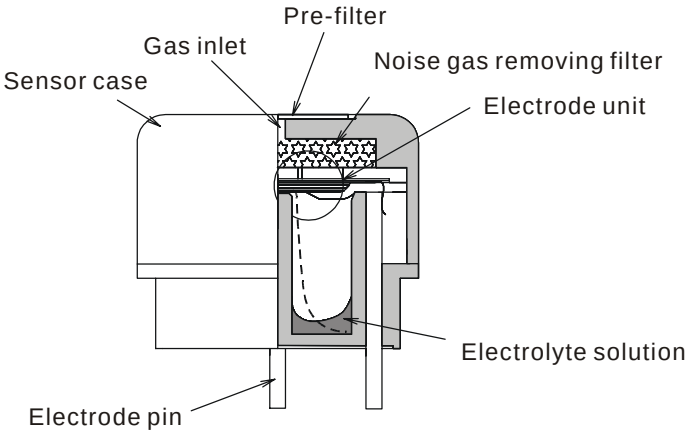


图 NAP—703 的构造

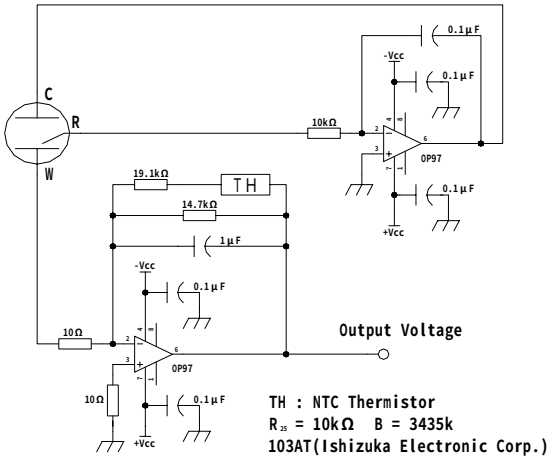


图 推荐电路图

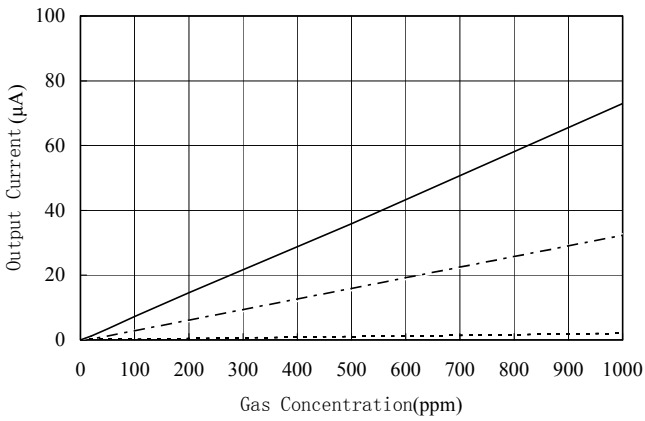


图 气体灵敏度特性

# NAP—720

电化学式 $H_2S$ 气体传感器是最新开发的产品，是跟现有的 CO 传感器具有同样检知方式的传感器。该传感器具有半导体式无以伦比的稳定性。传感器本身没有热源，基本可以采用电池进行驱动，但在实际设计电路过程中须考虑到周边电路的电力消耗。

• 特性

| 项目 | 特性等 |
|---|---|
| 检测气体浓度范围 | $H_2S$　0～100ppm |
| 输出电流 | 500±100nA／ppm |
| 输出值重复再现性 | ±2%以内 |
| 反应时间 | 90%反应时间 20 秒以内 |
| 零点漂移 | 1ppm 以下(0－40℃) |
| 周围温度 | －20～＋50℃ |
| 周围湿度 | 15～90%RH |

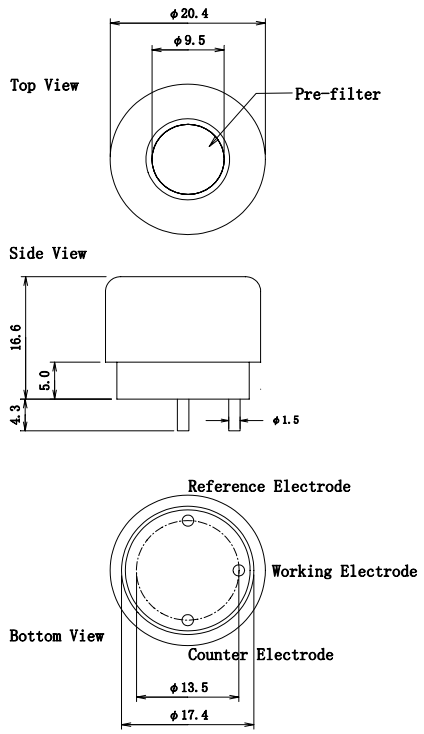


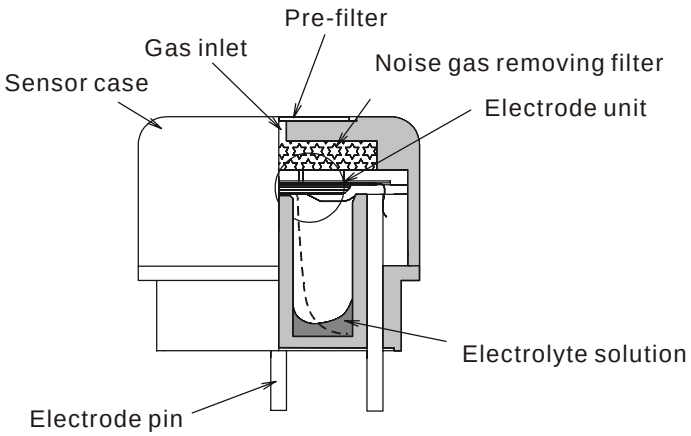


图 NAP—720 的构造

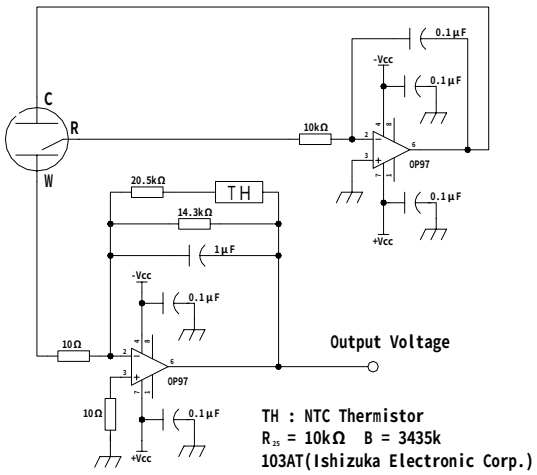


图 推荐电路图

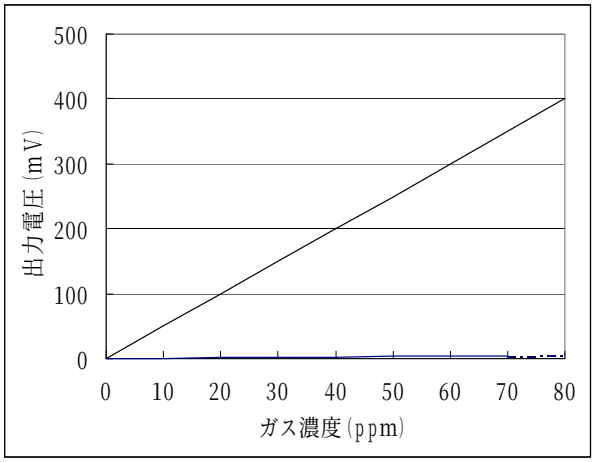


图 气体灵敏度特性

# NAP—505

NAP—505 采用了新构造，电解液漏洩的风险降低到几乎没有的水平，并且体积小，大幅度地降低了成本，尤其适合民用 CO 报警器。NAP—505 性能优越、成本低廉占据了两大优势。实现了向高层次演奏的 NAP—505 系列必定得到广大用户的青睐。

• 特性

| 项目 | 特性等 |
|---|---|
| 检测气体浓度范围 | CO　0～1000ppm |
| 输出电流 | 40±10nA／ppm |
| 重复再现性 | ±2%以内 |
| 反应时间 | ＜30 秒 |
| 零点漂移(-20□～50□) | ＜10ppm |
| 长期稳定性 | ＜５％ ／年 |
| 周围温度 | －20～＋50℃ |
| 周围湿度 | 15～90%RH |
| 使用寿命 | 通常 5 年 |

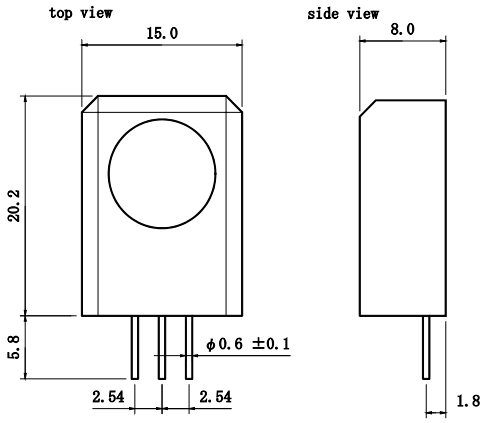


• 用途：

✧ 家庭用ＣＯ报警器
✧ 火灾报警器
✧ 自动换气扇
✧ 空气质量监测器

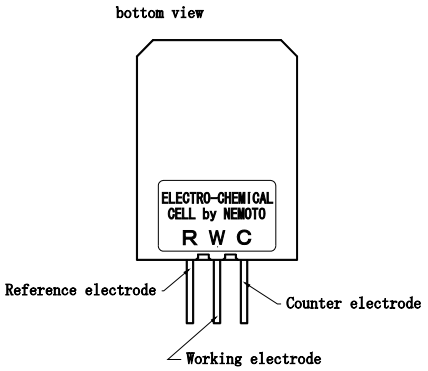


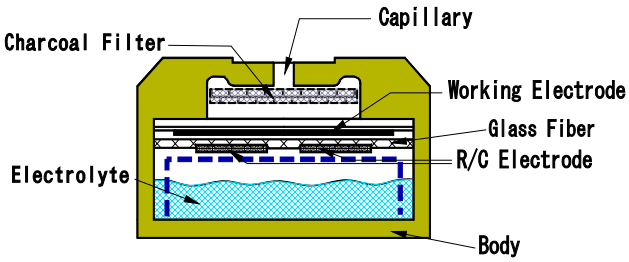


图　NAP—505 的构造、外形

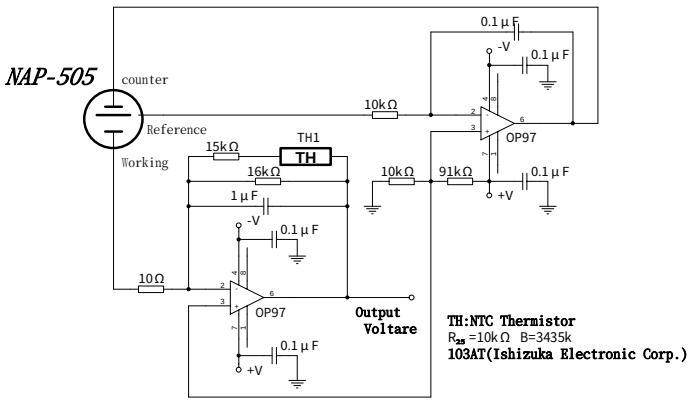


图 推荐电路图

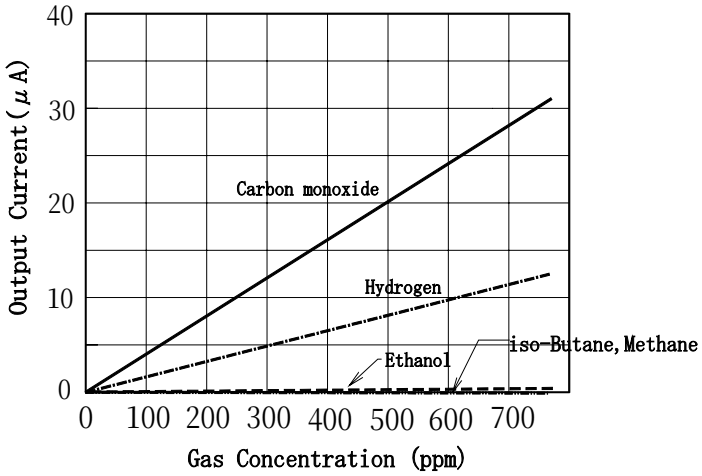


图　气体的灵敏度特性

# NIS—09C

NIS—09C 是离子是烟传感器，内部使用了微量的 $^{241}$Am 放射性物质，但传感器本身被金属制电极所覆盖，放射线决不会泄漏，请放心使用。

• 额定值

| 印加电压 | 特性值 |
|---|---|
| 印加電压 | DC7－12V 以下 |
| 电流 | 27±3pA |
| 放射线源 | 镅 241、33.3KBq |
| 周围温度 | 0－50℃ |
| 周围湿度 | 95%RH 以下 |

• 特性

| 項目 | 特性值 |
|---|---|
| 洁净大气中的输出值 | 5.6±0.4V |
| 棉芯 2%／foot 烟灵敏度 | 0.6±0.1V |

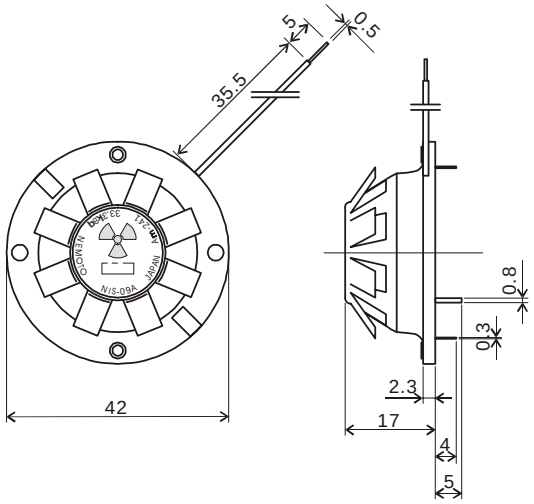


图　构造图

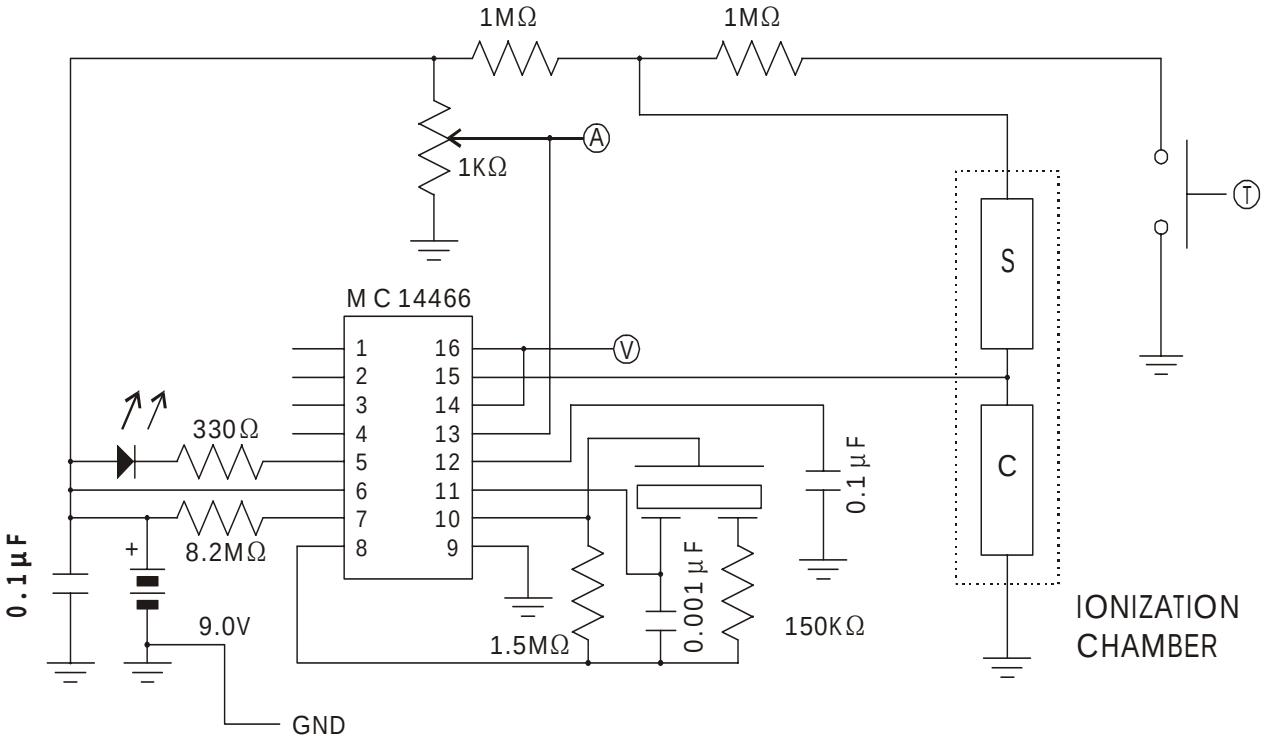


图　推荐检测电路

# NIS—05A

NIS-05A 也是离子式烟传感器，和 NIS—09C 同样内部使用了微量放射性物质 $^{241}$Am，由于传感器本体被金属电极所覆盖，所以放射线决不会泄漏可以放心使用。另外，05A 的放射能和 09C 相比只使用了 55%，所以对放射能的使用有制约的国家也可以放心使用。并且这种传感器的脚配置及输出特性等和其他公司的产品有互换性。

• 额定值

| 印加电压 | 特性值 |
|---|---|
| 印加電压 | DC6－12V 以下 |
| 电流 | 15±3pA |
| 放射线源 | 镅 241、18.5KBq |
| 周围温度 | 0－50℃ |
| 周围湿度 | 95%RH 以下 |

• 特性

| 項目 | 特性值 |
|---|---|
| 洁净大气中的输出值 | 5.5±0.5V |
| 棉芯 2%／foot 烟灵敏度 | 1.2±0.3V |

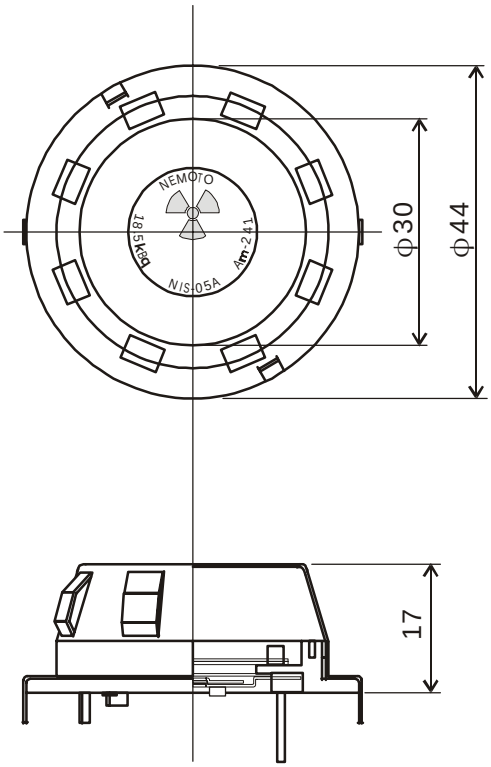


图　构造图

这种传感器的推荐电路请参阅 NIS—09C 项目中所示电路。

# 湿度传感器 NHS—12

NHS—12 是高性能、长寿命的高分子型湿度传感器。这种传感器即使在低湿度领域也不会急剧地发生高阻抗化（10MΩ）现象，在广阔的湿度范围内均可以进行高精度检测。并且由于其温度依附性小，检测电路可以简化。

• 额定值

| | |
|---|---|
| 测定湿度范围 | 10 — 90%RH |
| 使用时温度范围 | 0 — 60℃ |
| 保管时温度范围 | -20 — 60℃ |
| 测定精度 | ±5%RH 以下 |
| 印加电压 | AC1V 以下(正弦波或方形波) |
| 频率 | 500 — 2kHz(推荐值 1KHz) |
| 反应速度 | 1 分 |
| 外壳材料 | ABS 樹脂 |

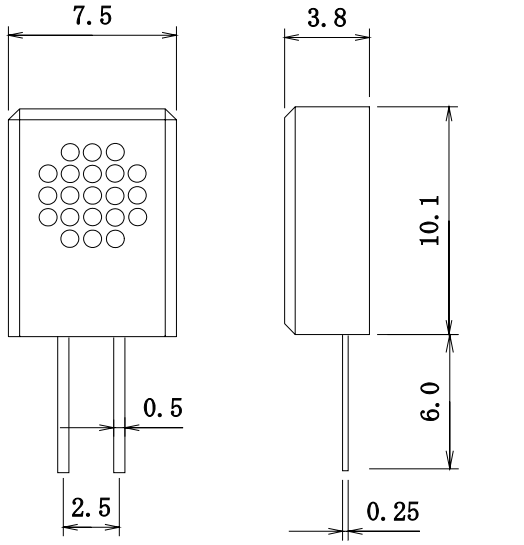


外形尺寸

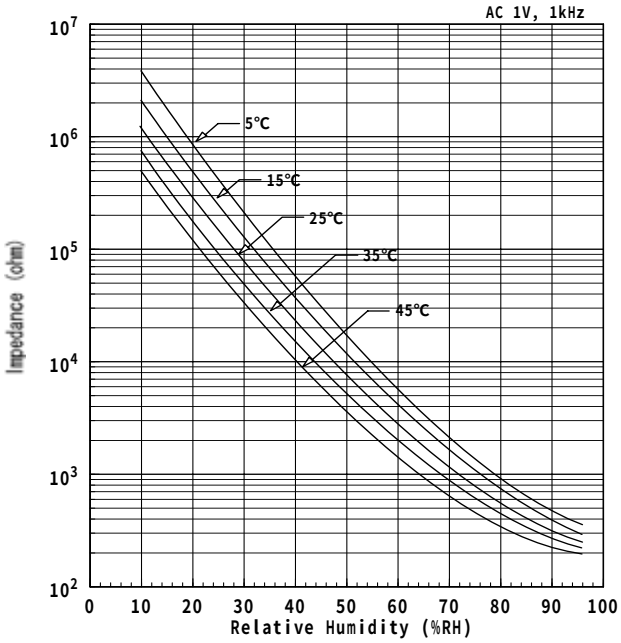


湿度特性

这种传感器使用的额定条件比较宽松，低湿度下持久性、高湿度下持久性、对于油雾和烟等的污染也具有卓越的持久性能，所以其用途可以推广至空调、除湿机、加湿机、温室用自动控制器等。并且由于其具有突出的检测精度，所以也可以用在湿度计上。

关于推荐电路请向本公司另行咨询。

# Nemoto 工业气体传感器

・催化燃烧式

・电气化学式

〒168-0072 东京都杉並区高井户东 4-10-9

## ●工业级电气化学式气体传感器

| 型号 | | 探测气体 | 备注 |
|---|---|---|---|
| 1 | NE-CO | CO | 与 City Tech 4 系列传感器兼容. |
| 2 | NE-CO-P | | 平板型，可以直接焊接 |
| 3 | NE-H2S | $H_2S$ | 标准型, 0 – 100ppm, 500nA/ppm |
| 4 | NE-H2S-100 | | 0 – 100ppm，与 City 传感器兼容, 700nA/ppm |
| 5 | NE-H2S-200* | | 0 – 200ppm, 500nA/ppm |
| 6 | NE-H2S-500* | | 0 – 500ppm, 200nA/ppm |
| 7 | NE-H2S-P | | 平板型，可以直接焊接, 500nA/ppm |
| 8 | NE-NH3 | $NH_3$ | 标准型, 0 – 100ppm |
| 9 | NE-NH3-1000* | | 0 – 1,000ppm |
| 10 | NE-NH3-5000* | | 0 – 5,000ppm |
| 11 | NE-NO2 | $NO_2$ | 标准型, 0 – 20ppm |
| 12 | NE-NO2-P | | 平板型，可以直接焊接 |

*：因为基本特性与标准版的是一致的，所以在此总目录中详细信息没有逐一描述。

## ●工业级催化燃烧式气体传感器

| 型号 | | 探测气体 | 备注 |
|---|---|---|---|
| 1 | NC-170 | 一般可燃性气体 | 2.0V – 170mA，配对型 |
| 2 | NC-170S | | 2.0V – 170mA，单头型 |
| 3 | NC-300 | | 2.0V – 300mA，配对型 |
| 4 | NC-300S | | 2.0V – 300mA，单头型 |
| 5 | NC-180 | | 2.6V – 170mA，配对型 |
| 6 | NC-180S | | 2.6V – 170mA，单头型 |
| 7 | NC-180S-H | 氢气 | 1.6V – 140mA，单头型 |
| 8 | NC-180S-N | 氨气 | 2.2V – 150mA，单头型 |
| 9 | NC-180-H | 氢气 | 1.6V – 140mA，配对型 |
| 10 | NC-180-A | 乙炔 | 2.0V – 170mA，配对型 |
| 11 | NC-180-N | 氨气 | 2.2V – 150mA，配对型 |
| 12 | NC-50S | 一般可燃性气体 | 4.25V – 50mA，单头型 |
| 13 | NC-70S | | 3.0V – 75mA，单头型 |

# NE-CO

NE-CO 是工业级一氧化碳气体传感器。其输出信号比民用级的大，所以最小探测水平比民用级的低。另外，选择性与抵抗性比家用型的优越，同时气体反应速度相当快，与全世界的工业级传感器标准相符，可适用于更广范的领域。

- 特性

| 项目 | 特性等 |
|---|---|
| 检测气体浓度范围. | CO　0～2000ppm |
| 输出电流 | 70±15nA／ppm of CO |
| 重复再现性 | 小于 ±2% |
| 反应时间 | T90：小于 30 秒 |
| 零点漂移 | 小于 10ppm(-20－50℃) |
| 温度 | －20～＋50℃ |
| 湿度 | 15～90%RH |

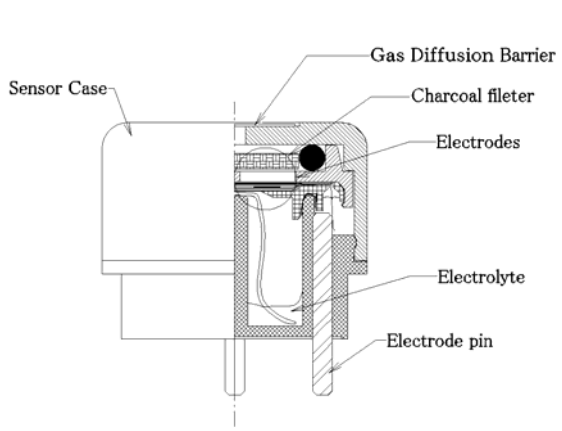


图. NE-CO 的结构

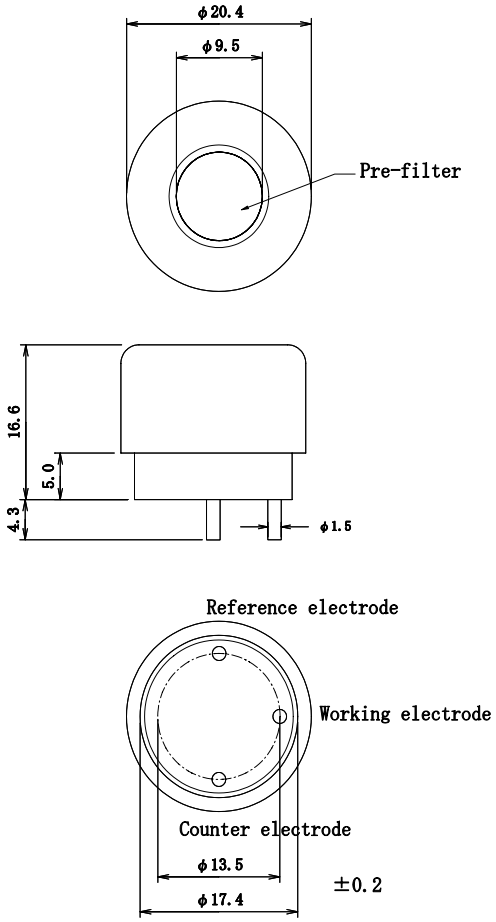


图. 外形和尺寸

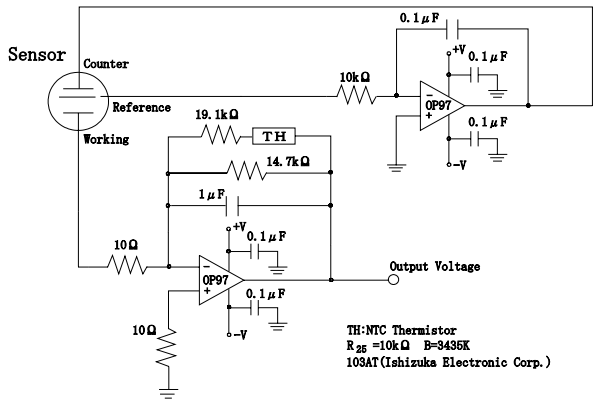


图. 推荐电路图

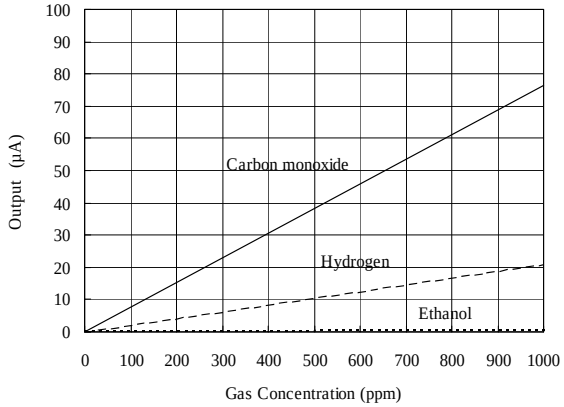


图. 气体感应度特性

**（ 壳体颜色 ： 浅绿 ）**

# NE-CO-P

NE-CO-P 与 NE-CO 一样是工业级一氧化碳气体传感器，因为其外形与民用级的 NAP-505 一样是平板型，所以可以直接焊接到 PCB. 但其广泛的特性和抵抗性与 NE-CO 基本相同，与全世界的工业级传感器标准也相符，可应用于广范的领域。

・特性和额定值

| 项目 | 特性等，额定值 |
|---|---|
| 检测气体浓度范围 | CO　0～1000ppm |
| 输出电流 | 40±10nA／ppm of CO |
| 重复再现性 | 小于 ±2% |
| 反应时间 | T90：小于 30 秒. |
| 零点漂移 | 小于 10ppm(-20－50℃) |
| 温度 | －20～＋50℃ |
| 湿度 | 15～90%RH |
| 压力范围 | 0.9 – 1.1atm |
| 使用寿命 | 2 年 |
| 贮存条件 | 推荐 0 – 20℃ |
| 零点偏移 | 小于 5ppm |

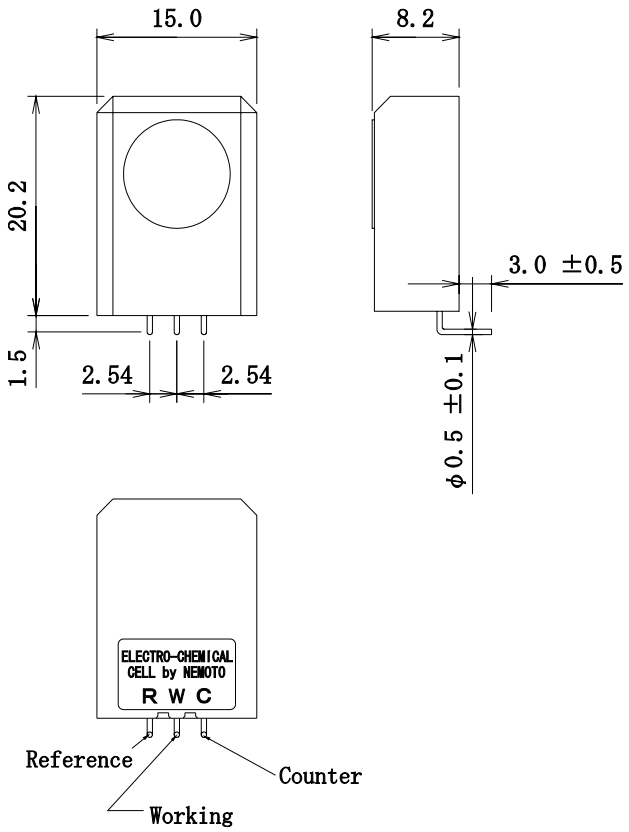


(±0.2)

〔right angle pin〕

・典型应用

背装式，便携式,手持式一氧化碳气体报警器

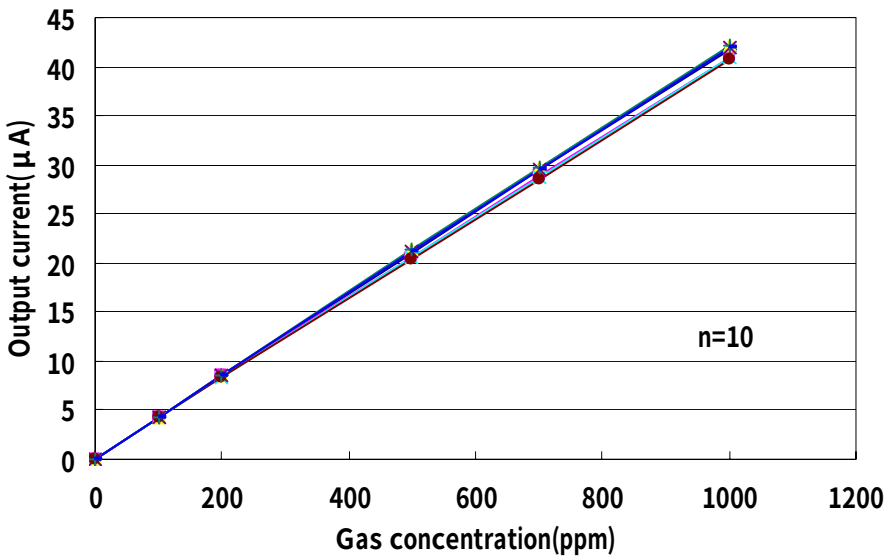


图. 气体浓度特性

**（ 壳体颜色 ： 浅绿色 ）**

# NE-H2S

NE-H2S 是应用于工业领域的硫化氢气体传感器，除了标准型号外(H2S-100，H2S-200 和 H2S-500)，下页所述的另外 3 种型号也可以提供.用户可根据自己的应用选择最合适的型号.输出电流非常大，意味着其可以检测相当低浓度的硫化氢，另外此传感器具有良好的选择性，抵抗性和重复再现性，所以可以在广范的领域内应用。

・特性等

| 项目 | 特性 |
|---|---|
| 检测气体浓度范围 | $H_2S$ 0～100ppm |
| 输出电流 | 500±100nA/ppm of H2S |
| 重复再现性 | 小于 ±2% |
| 反应时间 | T90：小于 30 秒 |
| 零点偏移 | 小于 1ppm(-20－50℃) |
| 温度 | －20～＋50℃ |
| 湿度 | 15～90%RH |

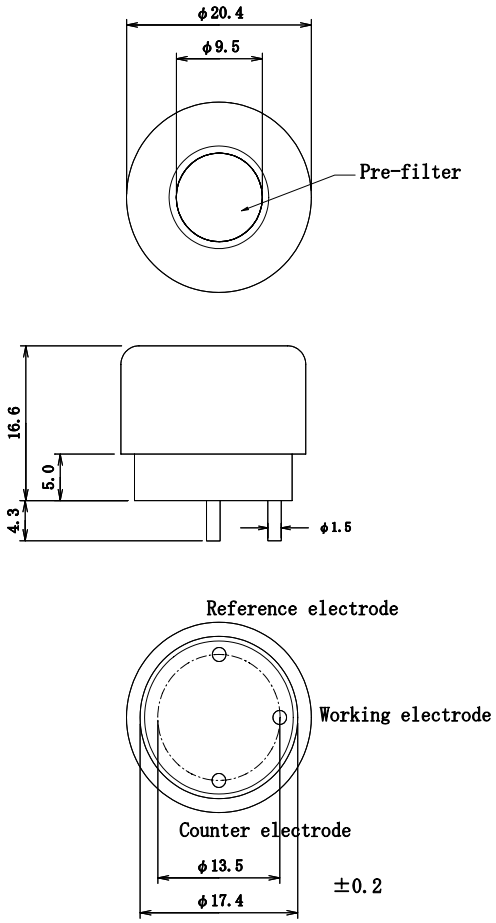


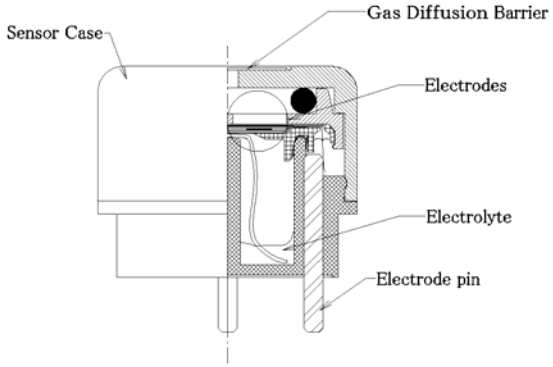


图. NE-H2S 的结构

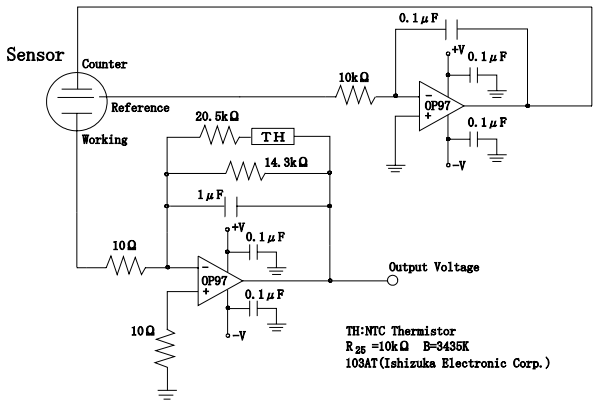


图. 推荐电路图

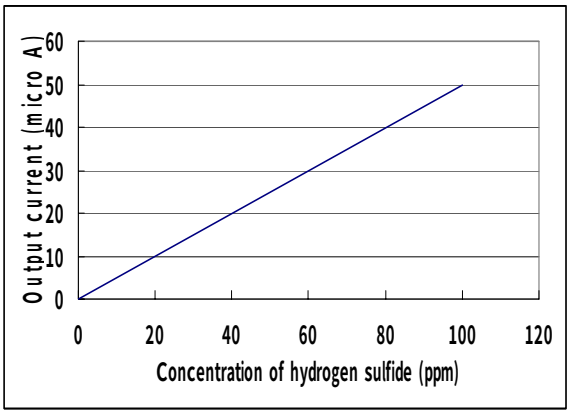


图. NE-H2S 的气体感应度特性

**( 壳体颜色 ： 黄色 )**

**NE-H2S-100, 200, 500**

结构，外形和壳体颜色与标准型号 NE-H2S 完全一致，气体灵敏度特性详述如下.

・NE-H2S-100

| 项目 | 特性 |
|---|---|
| 检测气体浓度范围 | $H_2S$ 0～100ppm |
| 输出电流 | 700±150nA/ppm |
| 重复再现性 | 小于 ±2% |
| 反应时间 | T90：小于 30 秒 |
| 零点偏移 | 小于 1ppm(-20－50℃) |
| 温度 | －20～＋50℃ |
| 湿度 | 15～90%RH |

・NE-H2S-200

| 项目 | 特性 |
|---|---|
| 检测气体浓度范围 | $H_2S$ 0～200ppm |
| 输出电流 | 500±100nA/ppm |
| 重复再现性 | 小于 ±2% |
| 反应时间 | T90：小于 30 秒 |
| 零点偏移 | 小于 1ppm(-20－50℃) |
| 温度 | －20～＋50℃ |
| 湿度 | 15～90%RH |

・NE-H2S-500

| Items | Features |
|---|---|
| 检测气体浓度范围 | $H_2S$ 0～500ppm |
| 输出电流 | 200±50nA/ppm of H2S |
| 重复再现性 | 小于±2% |
| 反应时间 | T90：小于 20 秒 |
| 零点偏移 | 小于 3ppm(-20－50℃) |
| 温度 | －20～＋50℃ |
| 湿度 | 15～90%RH |

# NE-H2S-P

NE-H2S-P 与 NE-H2S 一样是工业级硫化氢气体传感器，外形与民用传感器 NAP-505 一样是平板型，可直接焊接至 PCB. 但其广泛的特性和抵抗性与 NE-H2S 基本相同，与全世界的工业级传感器标准也相符，可应用于广范的领域。

・特性和额定值

| 项目 | 特性，额定值 |
|---|---|
| 检测气体浓度范围 | H2S　0～100ppm |
| 输出电流 | 120±20nA／ppm of H2S |
| 重复再现性 | 小于 ±2% |
| 反应时间 | T90：小于 20 秒 |
| 零点偏移 | 小于 2ppm(-20－50℃) |
| 温度 | －20～＋50℃ |
| 湿度 | 15～90%RH |
| 压力范围 | 0.9 – 1.1atm |
| 使用寿命 | 2 年 |
| 贮存条件 | 推荐 0 – 20℃ |
| 零点偏移 | 小于 1ppm |

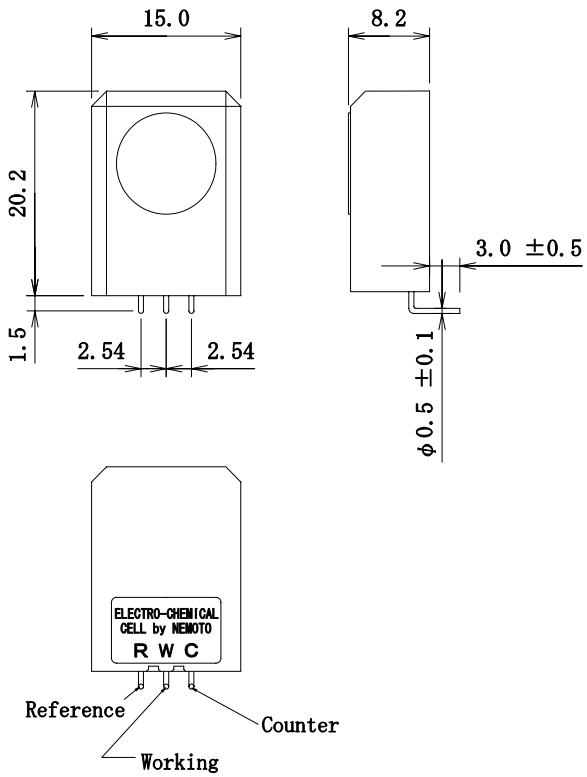


(±0.2)

〔right angle pin〕

・典型应用

背装式，手持式和便携式硫化氢报警器

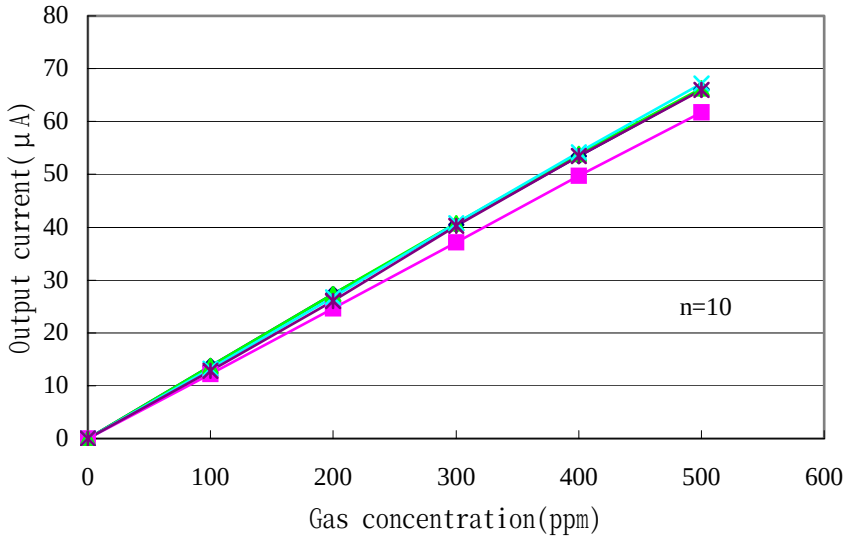


图. 气体浓度特性

**( 壳体颜色 ： 黄色 )**

# NE-NH3

NE-NH3 是最近研发出来的应用于工业领域的氨气传感器. 除了标准型号外下页中所述的用于更高浓度检测的另外两种型号也可提供. 在常规环境下超过 6 个月的时间内都非常稳定，可高精度检测氨气且感应度不衰减. 另外，此传感器可以在极低的温度环境下使用，适合多种应用.

・特性

| 项目 | 特性 |
|---|---|
| 检测气体浓度范围 | $NH_3$ 0～100ppm |
| 输出电流 | 40±12nA／ppm |
| 重复再现性 | 小于 ±10% |
| 反应时间 | T90：小于 90 秒. |
| 零点偏移 | 小于 15ppm(-30－50℃) |
| 温度 | －40～＋50℃ |
| 湿度 | 15～90%RH |

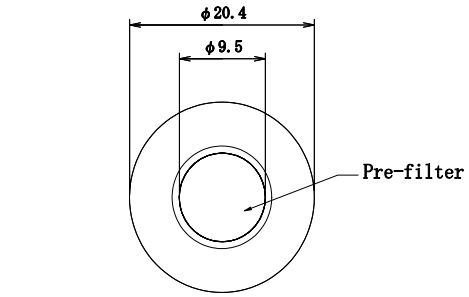


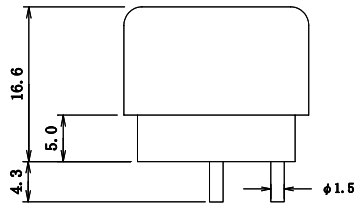


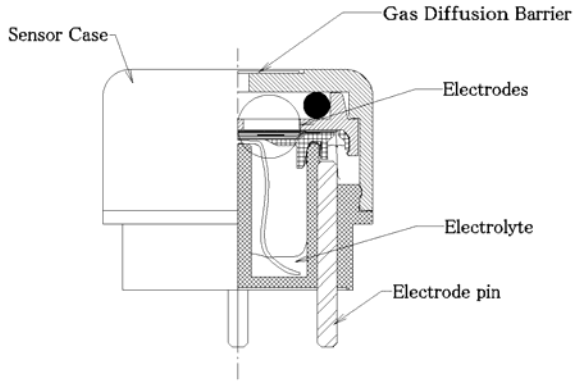


图. NE-NH3 的结构

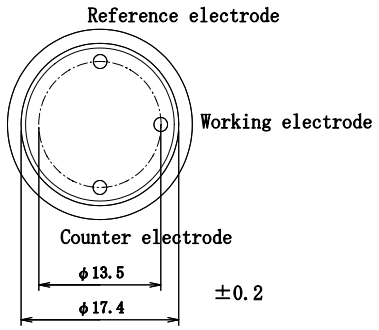


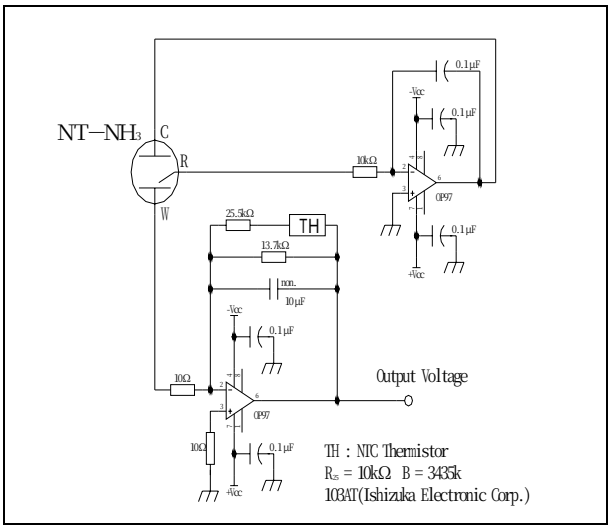


图. 推荐电路图

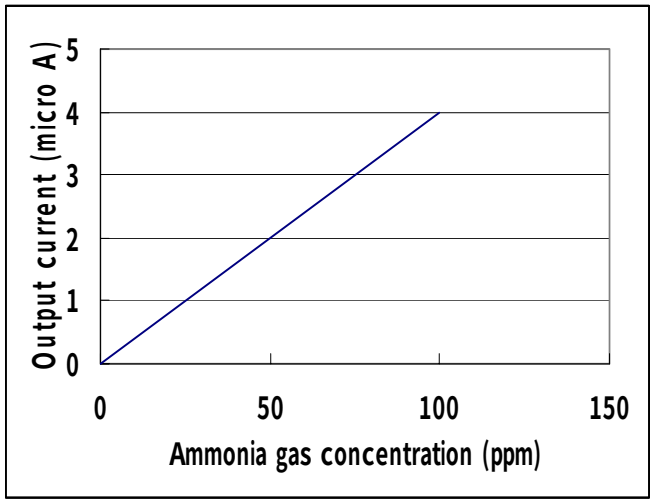


图. 气体浓度特性

（ 壳体颜色 ： 紫兰色 ）

**NE-NH3-1000, 5000**

结构，外形和壳体颜色与标准型号 NE-NH3 完全一致。其灵敏度特性描述如下：

・NE-NH3-1000

| 项目 | 特性 |
|---|---|
| 检测气体浓度范围 | $NH_3$ 0～1,000ppm |
| 输出电流 | 8±4nA／ppm |
| 重复再现性 | 小于 ±10% |
| 反应速度 | T90：小于 120 秒 |
| 零点偏移 | 小于 75ppm(-30－50℃) |
| 温度 | －40～＋50℃ |
| 湿度 | 15～90%RH |

・NE-NH3-5000

| 项目 | 特性 |
|---|---|
| 检测气体浓度范围 | $NH_3$ 0～5,000ppm |
| 输出电流 | 4±2nA／ppm |
| 重复再现性 | 小于 ±10% |
| 反应速度 | T90：小于 150 秒 |
| 零点偏移 | 小于 150ppm(-30－50℃) |
| 温度 | －40～＋50℃ |
| 湿度 | 15～90%RH |

# NE-NO2

NE-NO2 是最近研发出来的 NO2 气体传感器. 因为其输出电流相当大，所以可以精确检测低浓度的 NO2. 另外，此传感器具有良好的重复再现性，长期稳定性，选择性和抵抗性，可应用于多种领域.

・特性

| 项目 | 特性 |
|---|---|
| 检测气体浓度范围 | $NO_2$ 0～20ppm |
| 输出电流 | 600±150nA／ppm<br>(和其他型号成反信号输出) |
| 重复再现性 | 小于 ±2% |
| 反应时间 | T90：小于 25 秒 |
| 零点偏移 | 小于 0.2ppm(-20－50℃) |
| 温度 | －20～＋50℃ |
| 湿度 | 15～90%RH |

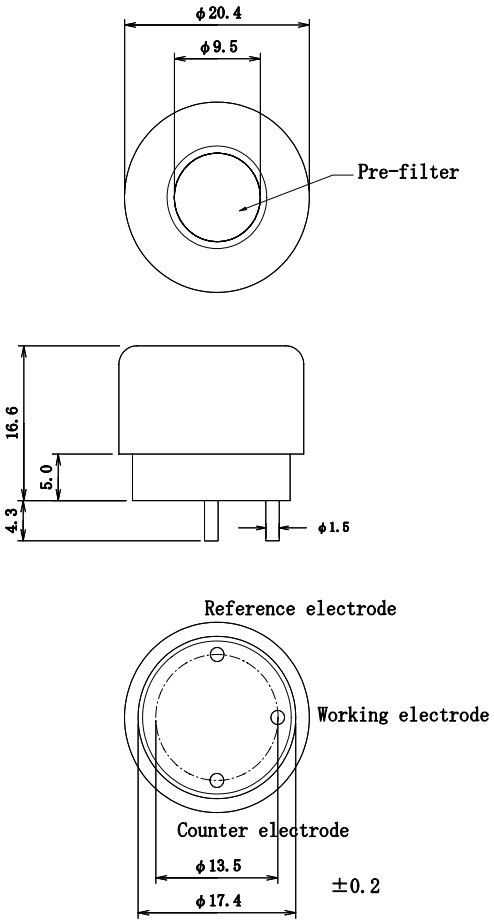


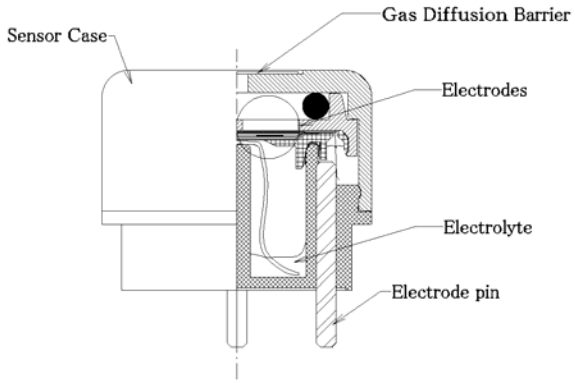


图. NE-NO2 的结构

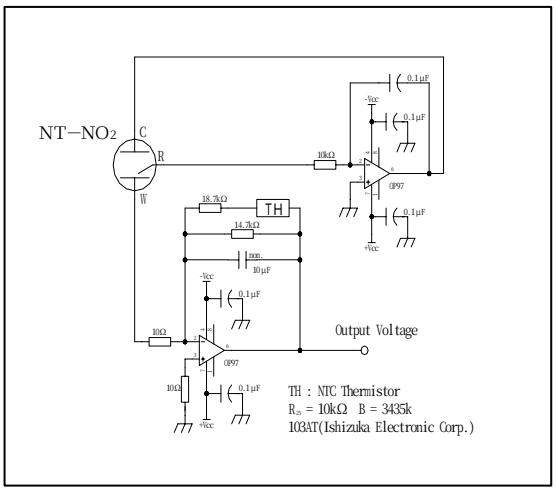


图. 推荐电路图

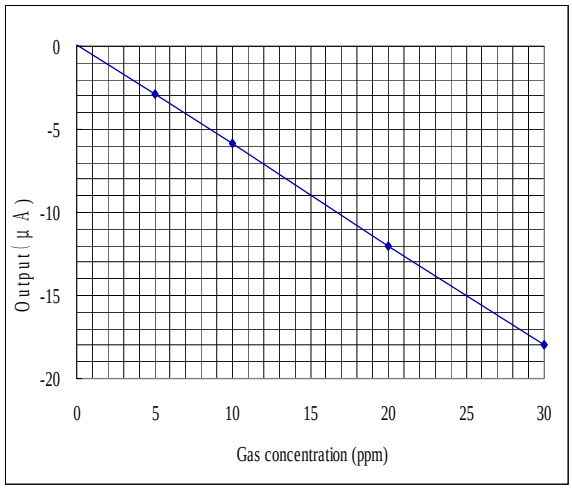


图. 气体浓度特性

**( 壳体颜色 ： 粉红色 )**

# NE-NO2-P

NE-NO2-P 与 NE-NO2 一样是工业 NO2 气体传感器，其外形与民用传感器 NAP-505 一样是平板型，可直接焊接到 PCB. 但是其广泛的特性和抵抗性与 NE-NO2 几乎相同，与全世界的标准也相符，适合于多种应用.

・特性和额定值

| 项目 | 特性，额定值 |
|---|---|
| 检测气体浓度范围 | NO2　0～20ppm |
| 输出电流 | 150±30nA／ppm of NO2 |
| 重复再现性 | 小于 ±2% |
| 反应时间 | T90：小于 25 秒 |
| 零点偏移 | 小于 0.5ppm (-20－50℃) |
| 温度 | －20～＋50℃ |
| 湿度 | 15～90%RH |
| 压力范围 | 0.9 – 1.1atm |
| 使用寿命 | 2 年 |
| 贮存条件 | 推荐 0 – 20℃ |
| 零点偏移 | 小于 0.5ppm |

注)
输出信号与其他型号成反向输出

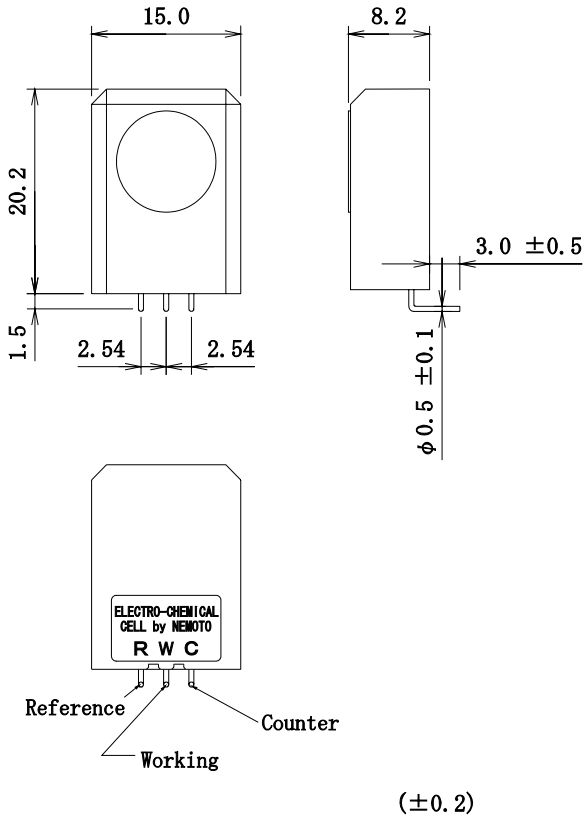


・典型应用
背装式,手持式和便携式 NO2 气体报警器

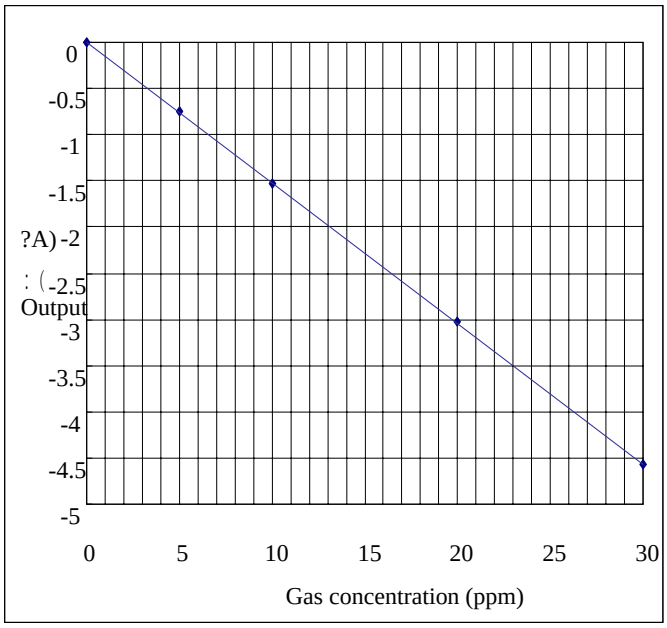


图. 气体浓度特性

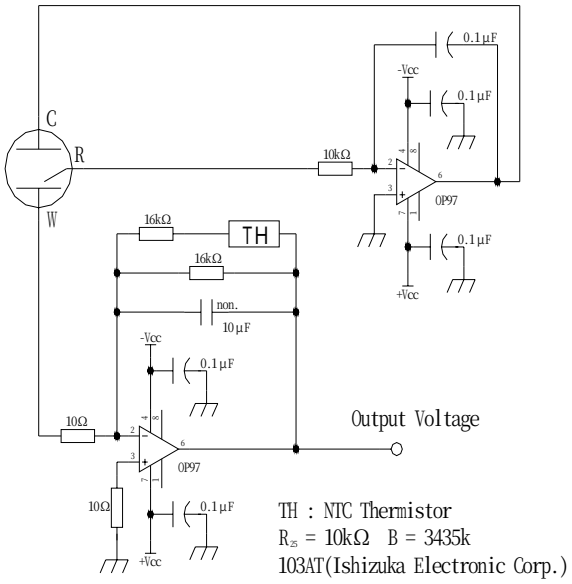


图. 推荐电路图

**( 壳体颜色 ： 粉红色 )**

# NC-170

NC-170 是工业级配对型气体传感器,已被许多客户采纳用于固定应用. 传感器本身不具备防爆功能, 所以必须安装具有 ATEX, CSA 等认证的外壳.

## ●额定值,尺寸,外形

| | |
|---|---|
| ・供给电压 | 2.0V |
| ・电流 | 170 – 190mV<br>(2.0V 供给时) |
| ・温度 | -20 - +60℃ |
| ・湿度 | 低于 95%RH<br>(不可结露) |
| ・测量范围 | 小于 100%LEL |
| ・外形 | 见右图 |
| ・尺寸 | 见右图<br>脚的长度现在已缩短至 25mm，并且都加了 O 环。 |

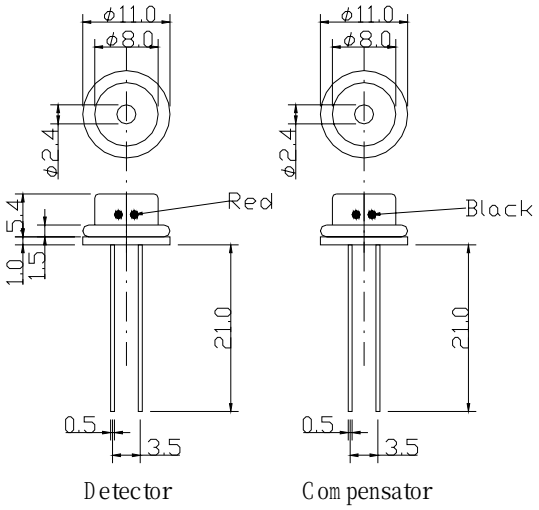


## ●标准灵敏度和空气中零点偏移

13 – 18mV/10%LEL 甲烷, 空气中零点偏移 -25 至 +25mV。

## ●相应灵敏度

| 气体 | | LEL | 相应灵敏度 | 气体 | | LEL | 相应灵敏度 |
|---|---|---|---|---|---|---|---|
| **1** | **甲烷** | **5.00%** | **100** | 11 | 乙炔 | 2.50 | - |
| 2 | 丙烷 | 2.20 | 90 | 12 | 一氧化碳 | 12.50 | 115 |
| 3 | n-丁烷 | 1.80 | 80 | 13 | 丙酮 | 2.60 | 75 |
| 4 | n-戊烷 | 1.40 | 80 | 14 | 丁酮 | 1.90 | 55 |
| 5 | n-（正）己烷 | 1.20 | 80 | 15 | 甲苯 | 1.20 | 60 |
| 6 | n-庚烷 | 1.05 | 65 | 16 | 乙酸乙酯 | 2.20 | 75 |
| 7 | n-辛烷 | 0.95 | 60 | 17 | 氢气 | 4.00 | 130 |
| 8 | 甲醇 | 6.70 | 125 | 18 | 氨气 | 15.00 | 140 |
| 9 | 乙醇 | 3.30 | 85 | 19 | 汽油 （无铅） | 1.20 | 80 |
| 10 | IPA | 2.20 | 75 | 20 | 乙烯 | 2.70 | 95 |

*：「-」 指不能检测的气体.

**：相应灵敏度指甲烷是 100 时的相应灵敏度.

# NC-300

NC-300 与 NC-170 一样是工业级配对型气体传感器，已被许多客户采纳用于固定应用. 传感器本身不具备防爆功能，所以必须装具有 ATEX, CSA 等认证的外壳.

## ●额定值，外形，尺寸

| | |
|---|---|
| ・供给电压 | 2.0V |
| ・电流 | 280 – 300mV<br>( 2.0V 供给时) |
| ・温度 | -20 - +60℃ |
| ・湿度 | 低于 95%RH<br>(不可结露) |
| ・测量范围 | 小于 100%LEL |
| ・外形 | 见右图 |
| ・尺寸 | 见如图<br>脚的长度现在已缩短至 25mm，并且都加了 O 环。 |

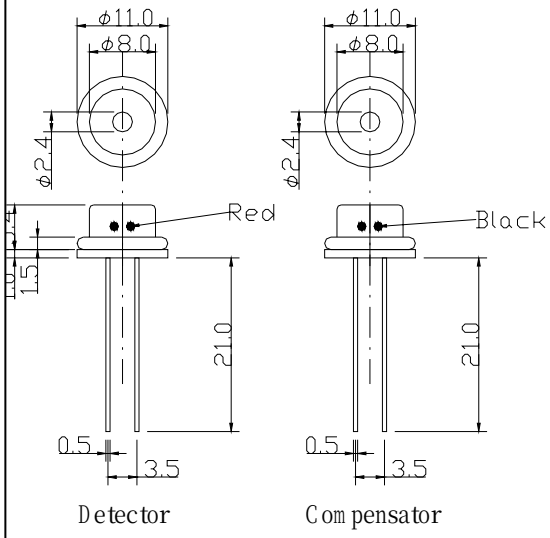


## ●标准灵敏度和空气中零点偏移

1 – 16mV/10%LEL 甲烷，空气中零点偏移 -30 至 +30mV

## ●相应灵敏度

| 气体 | | LEL | 相应灵敏度 | 气体 | | LEL | 相应灵敏度 |
|---|---|---|---|---|---|---|---|
| **1** | **甲烷** | **5.00%** | **100** | 11 | 乙炔 | 2.50 | - |
| 2 | 丙烷 | 2.20 | 75 | 12 | 一氧化碳 | 12.50 | 110 |
| 3 | n-丁烷 | 1.80 | 70 | 13 | 丙酮 | 2.60 | 60 |
| 4 | n-戊烷 | 1.40 | 70 | 14 | 丁酮 | 1.90 | 45 |
| 5 | n-（正）己烷 | 1.20 | 65 | 15 | 甲苯 | 1.20 | 60 |
| 6 | n-庚烷 | 1.05 | 55 | 16 | 乙酸乙酯 | 2.20 | 60 |
| 7 | n-辛烷 | 0.95 | 50 | 17 | 氢气 | 4.00 | 110 |
| 8 | 甲醇 | 6.70 | 100 | 18 | 氨气 | 15.00 | 130 |
| 9 | 乙醇 | 3.30 | 70 | 19 | 汽油 （无铅） | 1.20 | 65 |
| 10 | IPA | 2.20 | 60 | 20 | 乙烯 | 2.70 | 85 |

*：「-」 指不能检测的气体.

** :相应灵敏度指甲烷是 100 时的相应灵敏度.

# NC-170S

NC-170S 是工业级单头型气体传感器，已被许多客户采纳用于固定应用．传感器本身具备简易防爆功能，但推荐安装具有 ATEX, CSA 等认证的外壳．

## ●额定值，外形，尺寸

| | |
|---|---|
| ・供给电压 | 2.0V |
| ・电流 | 170 – 190mV (2.0V 供给时) |
| ・温度 | -20 - +60℃ |
| ・湿度 | 低于 95%RH (不可结露) |
| ・测量范围 | 小于 100%LEL |
| ・外形 | 见右图 |
| ・尺寸 | 见如图 |

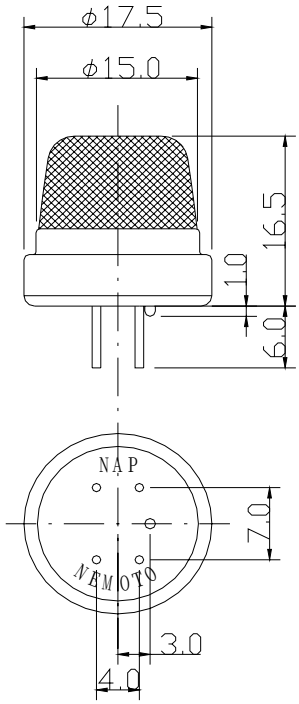


## ●标准灵敏度和空气中的零点偏移

27– 37mV/10%LEL 甲烷，空气中的零点偏移 -30 至 +30mV

## ●相应灵敏度

| 气体 | | LEL | 相应灵敏度 | 气体 | | LEL | 相应灵敏度 |
|---|---|---|---|---|---|---|---|
| **1** | **甲烷** | **5.00%** | **100** | 11 | 乙炔 | 2.50 | - |
| 2 | 丙烷 | 2.20 | 90 | 12 | 一氧化碳 | 12.50 | 115 |
| 3 | n-丁烷 | 1.80 | 80 | 13 | 丙酮 | 2.60 | 75 |
| 4 | n-戊烷 | 1.40 | 80 | 14 | 丁酮 | 1.90 | 55 |
| 5 | n-（正）己烷 | 1.20 | 80 | 15 | 甲苯 | 1.20 | 60 |
| 6 | n-庚烷 | 1.05 | 65 | 16 | 乙酸乙酯 | 2.20 | 75 |
| 7 | n-辛烷 | 0.95 | 60 | 17 | 氢气 | 4.00 | 130 |
| 8 | 甲醇 | 6.70 | 125 | 18 | 氨气 | 15.00 | 140 |
| 9 | 乙醇 | 3.30 | 85 | 19 | 汽油 （无铅） | 1.20 | 80 |
| 10 | IPA | 2.20 | 75 | 20 | 乙烯 | 2.70 | 95 |

*：「-」 指不能检测的气体．

**：相应灵敏度指甲烷是 100 时的相应灵敏度．

# NC-300S

NC-300S 和 NC-170S 一样是工业级单头型气体传感器，已被许多客户采纳用于固定应用. 传感器本身具备简易防爆功能，但推荐安装具有 ATEX, CSA 等认证的外壳.

## ●额定值，外形，尺寸

| | |
|---|---|
| ・供给电压 | 2.0V |
| ・电流 | 280 – 300mV (2.0V 供给时) |
| ・温度 | -20 - +60℃ |
| ・湿度 | 低于 95%RH (不可结露) |
| ・测量范围 | 小于 100%LEL |
| ・外形 | 见右图 |
| ・尺寸 | 见右图 |

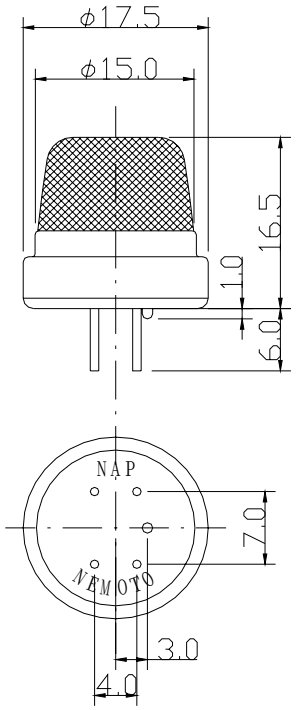


## ●标准灵敏度和空气中零点偏移

23– 33mV/10%LEL 甲烷，空气中的零点偏移 -30 至 +30mV

## ●相应灵敏度

| 气体 | | LEL | 相应灵敏度 | 气体 | | LEL | 相应灵敏度 |
|---|---|---|---|---|---|---|---|
| **1** | **甲烷** | **5.00%** | **100** | 11 | 乙炔 | 2.50 | - |
| 2 | 丙烷 | 2.20 | 75 | 12 | 一氧化碳 | 12.50 | 110 |
| 3 | n-丁烷 | 1.80 | 70 | 13 | 丙酮 | 2.60 | 60 |
| 4 | n-戊烷 | 1.40 | 70 | 14 | 丁酮 | 1.90 | 45 |
| 5 | n-（正）己烷 | 1.20 | 65 | 15 | 甲苯 | 1.20 | 60 |
| 6 | n-庚烷 | 1.05 | 55 | 16 | 乙酸乙酯 | 2.20 | 60 |
| 7 | n-辛烷 | 0.95 | 50 | 17 | 氢气 | 4.00 | 110 |
| 8 | 甲醇 | 6.70 | 100 | 18 | 氨气 | 15.00 | 130 |
| 9 | 乙醇 | 3.30 | 70 | 19 | 汽油 （无铅） | 1.20 | 65 |
| 10 | IPA | 2.20 | 60 | 20 | 乙烯 | 2.70 | 85 |

*：「-」 指不能检测的气体.

**：相应灵敏度指甲烷是 100 时的相应灵敏度.

# NC-180

NC-180 是工业级配对型气体传感器,已被许多客户采纳用于固定应用. 传感器本身不具备防爆功能, 所以必须安装具有 ATEX, CSA 等认证的外壳.

## ●额定值, 外形, 尺寸

- 供给电压　　2.6V
- 电流　　170 – 190mV (2.6V 供给时)
- 温度　　-20 - +60℃
- 湿度　　低于 95%RH (不可结露)
- 测量范围　　小于 100%LEL
- 外形　　见右图
- 尺寸　　见右图
  脚的长度现在已缩短至 25mm，并且都加了 O 环。

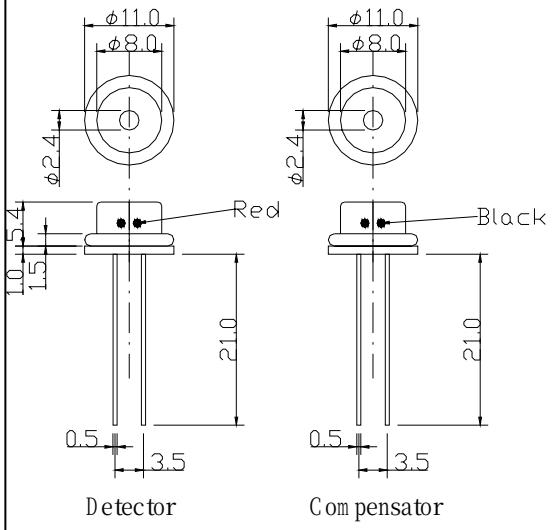


## ●标准灵敏度

14 – 19mV/10%LEL 甲烷

## ●相应灵敏度

| 气体 | | LEL | 相应灵敏度 | 气体 | | LEL | 相应灵敏度 |
|---|---|---|---|---|---|---|---|
| **1** | **甲烷** | **5.00%** | **100** | 11 | 乙炔 | 2.50 | - |
| 2 | 丙烷 | 2.20 | 75 | 12 | 一氧化碳 | 12.50 | 110 |
| 3 | n-丁烷 | 1.80 | 70 | 13 | 丙酮 | 2.60 | 60 |
| 4 | n-戊烷 | 1.40 | 70 | 14 | 丁酮 | 1.90 | 50 |
| 5 | n-（正）己烷 | 1.20 | 70 | 15 | 甲苯 | 1.20 | 60 |
| 6 | n-庚烷 | 1.05 | 60 | 16 | 乙酸乙酯 | 2.20 | 60 |
| 7 | n-辛烷 | 0.95 | 55 | 17 | 氢气 | 4.00 | 110 |
| 8 | 甲醇 | 6.70 | 100 | 18 | 氨气 | 15.00 | 135 |
| 9 | 乙醇 | 3.30 | 70 | 19 | 汽油　（无铅） | 1.20 | 60 |
| 10 | IPA | 2.20 | 60 | 20 | 乙烯 | 2.70 | 90 |

*：「-」 指不能检测的气体.

**：相应灵敏度指甲烷是 100 时的相应灵敏度.

.

# NC-180S

NC-180S 和 NC-170S 一样是工业级单头型气体传感器，已被许多客户采纳用于固定应用. 传感器本身具备简易防爆功能，但推荐安装具有 ATEX, CSA 等认证的外壳.

## ●额定值,外形,尺寸

| | |
|---|---|
| ・供给电压 | 2.6V |
| ・电流 | 170 – 190mV (2.6V 供给时) |
| ・温度 | -20 - +60℃ |
| ・湿度 | 低于 95%RH (不可结露) |
| ・测量范围 | 小于 100%LEL |
| ・外形 | 见右图 |
| ・尺寸 | 见右图 |

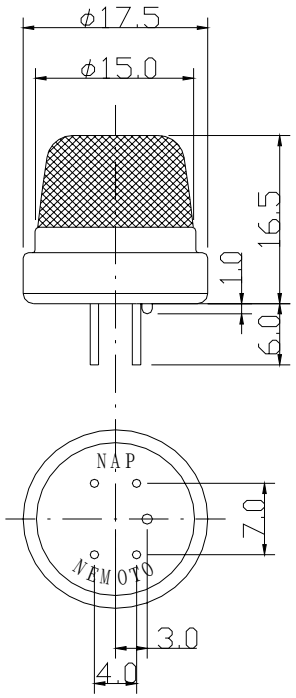


## ●标准灵敏度和空气中零点偏移

28– 40mV/10%LEL 甲烷，空气中零点偏移 -30 至 +30mV

## ●相应灵敏度

| 气体 | | LEL | 相应灵敏度 | 气体 | | LEL | 相应灵敏度 |
|---|---|---|---|---|---|---|---|
| **1** | **甲烷** | **5.00%** | **100** | 11 | 乙炔 | 2.50 | - |
| 2 | 丙烷 | 2.20 | 75 | 12 | 一氧化碳 | 12.50 | 110 |
| 3 | n-丁烷 | 1.80 | 70 | 13 | 丙酮 | 2.60 | 60 |
| 4 | n-戊烷 | 1.40 | 70 | 14 | 丁酮 | 1.90 | 50 |
| 5 | n-（正）己烷 | 1.20 | 70 | 15 | 甲苯 | 1.20 | 60 |
| 6 | n-庚烷 | 1.05 | 60 | 16 | 乙酸乙酯 | 2.20 | 60 |
| 7 | n-辛烷 | 0.95 | 55 | 17 | 氢气 | 4.00 | 110 |
| 8 | 甲醇 | 6.70 | 100 | 18 | 氨气 | 15.00 | 135 |
| 9 | 乙醇 | 3.30 | 70 | 19 | 汽油 （无铅） | 1.20 | 60 |
| 10 | IPA | 2.20 | 65 | 20 | 乙烯 | 2.70 | 90 |

*：「-」 指不能检测的气体.

**：相应灵敏度指甲烷是 100 时的相应灵敏度.

# NC-180S-H

NC-180S-H 是工业级单头型氢气传感器，已被许多客户采纳用于固定应用. 传感器本身具备简易防爆功能, 但推荐安装具有 ATEX, CSA 等认证的外壳.

## ●额定值,外形,尺寸

| | |
|---|---|
| ・供给电压 | 1.6V |
| ・电流 | 130 – 150mV (1.6V 供给时) |
| ・温度 | -20 - +60℃ |
| ・湿度 | 低于 95%RH (不可结露) |
| ・测量范围 | 小于 100%LEL |
| ・外形 | 见右图 |
| ・尺寸 | 见右图 |

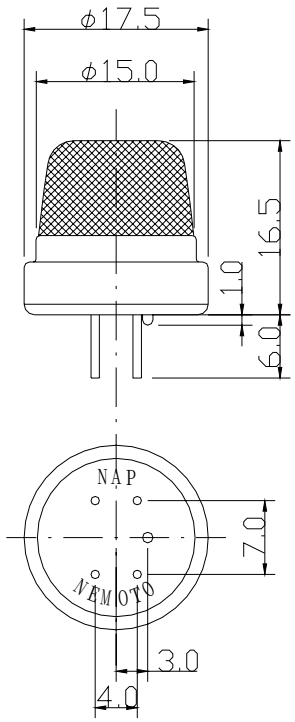


## ●标准灵敏度和空气中零点偏移

35– 50mV/10%LEL 氢气, 空气中零点偏移 -30 至 +30mV

## ●相应灵敏度

| 气体 | | LEL | 相应灵敏度 | 气体 | | LEL | 相应灵敏度 |
|---|---|---|---|---|---|---|---|
| 1 | 甲烷 | 5.00% | 0 | 11 | 乙炔 | 2.50 | - |
| 2 | 丙烷 | 2.20 | 0 | 12 | 一氧化碳 | 12.50 | 115 |
| 3 | n-丁烷 | 1.80 | 0 | 13 | 丙酮 | 2.60 | 45 |
| 4 | n-戊烷 | 1.40 | 5 | 14 | 丁酮 | 1.90 | 45 |
| 5 | n-（正）己烷 | 1.20 | 10 | 15 | 甲苯 | 1.20 | 70 |
| 6 | n-庚烷 | 1.05 | 30 | 16 | 乙酸乙酯 | 2.20 | 10 |
| 7 | n-辛烷 | 0.95 | 20 | 17 | **氢气** | **4.00** | **100** |
| 8 | 甲醇 | 6.70 | 100 | 18 | 氨气 | 15.00 | 120 |
| 9 | 乙醇 | 3.30 | 40 | 19 | 汽油 （无铅） | 1.20 | 10 |
| 10 | IPA | 2.20 | 45 | 20 | 乙烯 | 2.70 | 65 |

**：「-」 指不能检测的气体.

**：相应灵敏度指氢气是 100 时的相应灵敏度.

.

# NC-180S-N

NC-180S-N 是工业级单头型氨气传感器，已被许多客户采纳用于固定应用. 传感器本身具备简易防爆功能, 但推荐安装具有 ATEX, CSA 等认证的外壳.

## ●额定值,外形,尺寸

- 供给电压　　2.2V
- 电流　　160 – 180mV (2.2V 供给时)
- 温度　　-20 - +60℃
- 湿度　　低于 95%RH (不可结露)
- 测量范围　　小于 100%LEL
- 外形　　见右图
- 尺寸　　见右图

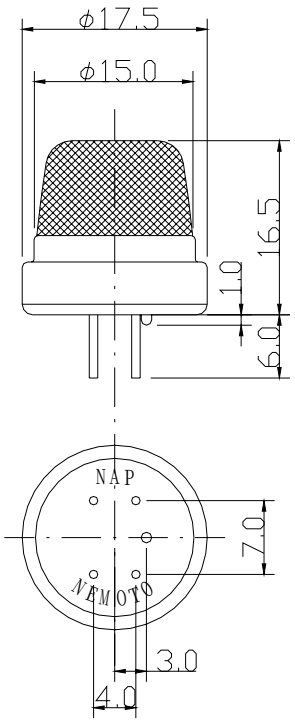


## ●标准灵敏度和空气中零点偏移

35– 65mV/10%LEL 氨气, 空气中零点偏移 -30 至 +30mV

## ●相应灵敏度

| 气体 | | LEL | 相应灵敏度 | 气体 | | LEL | 相应灵敏度 |
|---|---|---|---|---|---|---|---|
| 1 | 甲烷 | 5.00% | 0 | 11 | 乙炔 | 2.50 | - |
| 2 | 丙烷 | 2.20 | 20 | 12 | 一氧化碳 | 12.50 | 20 |
| 3 | n-丁烷 | 1.80 | 30 | 13 | 丙酮 | 2.60 | 60 |
| 4 | n-戊烷 | 1.40 | 40 | 14 | 丁酮 | 1.90 | 50 |
| 5 | n-（正）己烷 | 1.20 | 45 | 15 | 甲苯 | 1.20 | 50 |
| 6 | n-庚烷 | 1.05 | 40 | 16 | 乙酸乙酯 | 2.20 | 50 |
| 7 | n-辛烷 | 0.95 | 35 | 17 | 氢气 | 4.00 | 75 |
| 8 | 甲醇 | 6.70 | 80 | 18 | **氨气** | **15.00** | **100** |
| 9 | 乙醇 | 3.30 | 55 | 19 | 汽油 （无铅） | 1.20 | 35 |
| 10 | IPA | 2.20 | 50 | 20 | 乙烯 | 2.70 | 60 |

** : 「-」 指不能检测的气体.

** :相应灵敏度指氨气是 100 时的相应灵敏度.

# NC-180-H

NC-180-H 是工业级配对型氢气传感器，已被许多客户采纳用于固定应用. 传感器本身不具备防爆功能, 所以必须安装具有 ATEX, CSA 等认证的外壳.

## ●额定值,外形,尺寸

| | |
|---|---|
| ・供给电压 | 1.6V |
| ・电流 | 130 – 150mV<br>(1.6V 供给时) |
| ・温度 | -20 - +60℃ |
| ・湿度 | 低于 95%RH<br>(不可结露) |
| ・测量范围 | 小于 100%LEL |
| ・外形 | 见右图 |
| ・尺寸 | 见右图<br>脚的长度现在已缩短至 25mm，并且都加了 O 环。 |

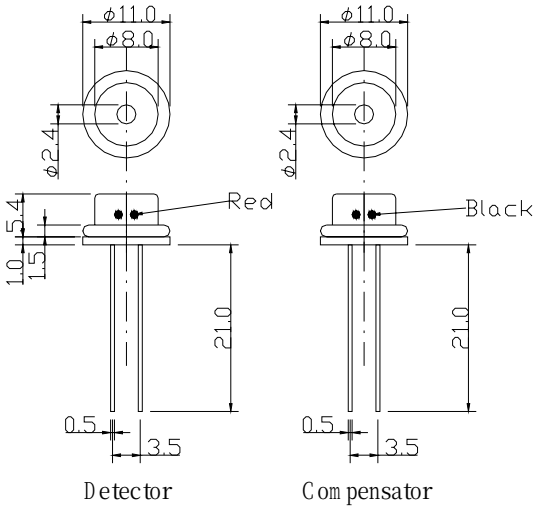


## ●标准灵敏度和空气中零点偏移

10 – 20mV/10%LEL 氢气, 空气中零点偏移 -30 至 +30mV

## ●相应灵敏度

| 气体 | | LEL | 相应灵敏度 | 气体 | | LEL | 相应灵敏度 |
|---|---|---|---|---|---|---|---|
| 1 | 甲烷 | 5.00% | 0 | 11 | 乙炔 | 2.50 | - |
| 2 | 丙烷 | 2.20 | 0 | 12 | 一氧化碳 | 12.50 | 110 |
| 3 | n-丁烷 | 1.80 | 0 | 13 | 丙酮 | 2.60 | 40 |
| 4 | n-戊烷 | 1.40 | 5 | 14 | 丁酮 | 1.90 | 40 |
| 5 | n-（正）己烷 | 1.20 | 10 | 15 | 甲苯 | 1.20 | 55 |
| 6 | n-庚烷 | 1.05 | 25 | 16 | 乙酸乙酯 | 2.20 | 10 |
| 7 | n-辛烷 | 0.95 | 15 | 17 | **氢气** | **4.00** | **100** |
| 8 | 甲醇 | 6.70 | 95 | 18 | 氨气 | 15.00 | 115 |
| 9 | 乙醇 | 3.30 | 35 | 19 | 汽油 （无铅） | 1.20 | 15 |
| 10 | IPA | 2.20 | 40 | 20 | 乙烯 | 2.70 | 65 |

**：「-」 指不能检测的气体.

**：相应灵敏度指氢气是 100 时的相应灵敏度.

# NC-180-A

NC-180-A 是工业级配对型乙炔气体传感器，已被许多客户采纳用于固定应用. 传感器本身不具备防爆功能, 所以必须安装具有 ATEX, CSA 等认证的外壳.

## ●额定值,外形,尺寸

- 供给电压　2.0V
- 电流　140 – 170mV (2.0V 供给时)
- 温度　-20 - +60℃
- 湿度　低于 95%RH (不可结露)
- 测量范围　小于 100%LEL
- 外形　见右图
- 尺寸　见右图

脚的长度现在已缩短至 25mm，并且都加了 O 环。

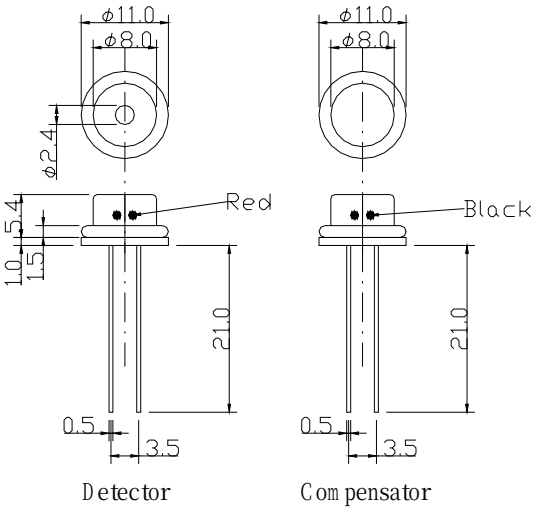


## ●标准灵敏度和空气中零点偏移

8 – 20mV/10%LEL 乙炔, 空气中零点偏移 -30 至 +30mV

## ●相应灵敏度

| 气体 | | LEL | 相应灵敏度 | 气体 | | LEL | 相应灵敏度 |
|---|---|---|---|---|---|---|---|
| 1 | 甲烷 | 5.00% | 0 | **11** | **乙炔** | **2.50** | **100** |
| 2 | 丙烷 | 2.20 | 25 | 12 | 一氧化碳 | 12.50 | 110 |
| 3 | n-丁烷 | 1.80 | 35 | 13 | 丙酮 | 2.60 | 85 |
| 4 | n-戊烷 | 1.40 | 55 | 14 | 丁酮 | 1.90 | 75 |
| 5 | n-（正）己烷 | 1.20 | 65 | 15 | 甲苯 | 1.20 | 70 |
| 6 | n-庚烷 | 1.05 | 60 | 16 | 乙酸乙酯 | 2.20 | 70 |
| 7 | n-辛烷 | 0.95 | 55 | 17 | 氢气 | 4.00 | 130 |
| 8 | 甲醇 | 6.70 | 130 | 18 | 氨气 | 15.00 | 165 |
| 9 | 乙醇 | 3.30 | 90 | 19 | 汽油 （无铅） | 1.20 | 65 |
| 10 | IPA | 2.20 | 80 | 20 | 乙烯 | 2.70 | 95 |

** : 相应灵敏度指乙炔是 100 时的相应灵敏度..

# NC-180-N

NC-180-N 是工业级配对型氨气传感器，已被许多客户采纳用于固定应用. 传感器本身不具备防爆功能, 所以必须安装具有 ATEX, CSA 等认证的外壳.

## ●额定值,外形,尺寸

| | |
|---|---|
| ・供给电压 | 2.2V |
| ・电流 | 160 – 190mV<br>(2.2V 供给时) |
| ・温度 | -20 - +60℃ |
| ・湿度 | 低于 95%RH<br>(不可结露) |
| ・测量范围 | 小于 100%LEL |
| ・外形 | 见右图 |
| ・尺寸 | 见右图<br>脚的长度现在已缩短至 25mm，并且都加了 O 环。 |

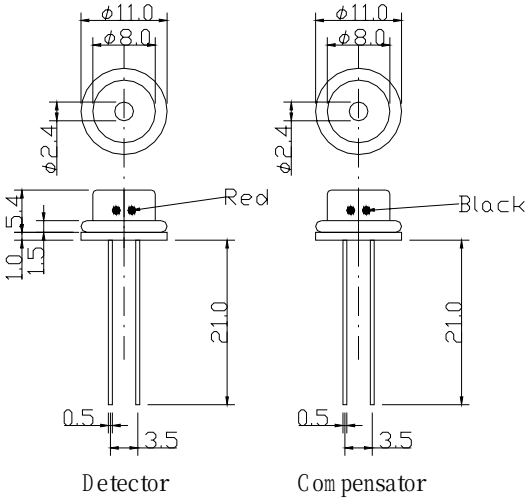


## ●标准灵敏度和空气中零点偏移

15 – 25mV/10%LEL 氨气, 空气中零点偏移 -30 至 +30mV

## ●相应灵敏度

| 气体 | | LEL | 相应灵敏度 | 气体 | | LEL | 相应灵敏度 |
|---|---|---|---|---|---|---|---|
| 1 | 甲烷 | 5.00% | 10 | 11 | 乙炔 | 2.50 | - |
| 2 | 丙烷 | 2.20 | 20 | 12 | 一氧化碳 | 12.50 | 85 |
| 3 | n-丁烷 | 1.80 | 40 | 13 | 丙酮 | 2.60 | 60 |
| 4 | n-戊烷 | 1.40 | 55 | 14 | 丁酮 | 1.90 | 45 |
| 5 | n-（正）己烷 | 1.20 | 60 | 15 | 甲苯 | 1.20 | 40 |
| 6 | n-庚烷 | 1.05 | 50 | 16 | 乙酸乙酯 | 2.20 | 60 |
| 7 | n-辛烷 | 0.95 | 45 | 17 | 氢气 | 4.00 | 110 |
| 8 | 甲醇 | 6.70 | 100 | **18** | **氨气** | **15.00** | **100** |
| 9 | 乙醇 | 3.30 | 70 | 19 | 汽油 （无铅） | 1.20 | 50 |
| 10 | IPA | 2.20 | 60 | 20 | 乙烯 | 2.70 | 70 |

**：「-」 指不能检测的气体.

**：相应灵敏度指氨气是 100 时的相应灵敏度.

# NC-50S

NC-50S 是工业级单头型气体传感器,已被许多客户采纳用于固定应用. 传感器本身具备简易防爆功能, 但推荐安装具有 ATEX, CSA 等认证的外壳.

## ●额定值,外形,尺寸

| | |
|---|---|
| ・供给电压 | 4.25V |
| ・电流 | 45 – 55mV (4.25V 供给时) |
| ・温度 | -20 - +60℃ |
| ・湿度 | 低于 95%RH (不可结露) |
| ・测量范围 | 小于 100%LEL |
| ・外形 | 见右图 |
| ・尺寸 | 见右图 |

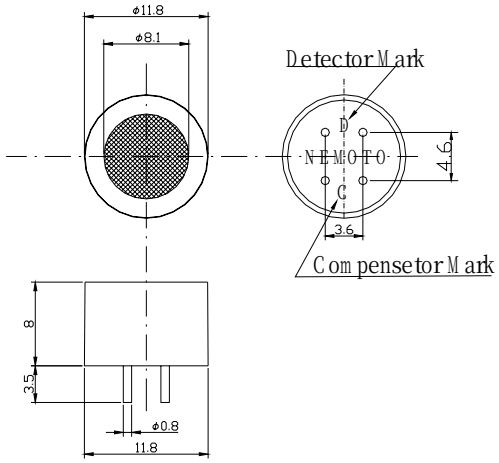


## ●标准灵敏度和空气中零点偏移

60 – 110mV/10%LEL 甲烷

空气中零点偏移 -20 至 +20mV (需零点偏移补偿电阻)

## ●相应灵敏度

| 气体 | | LEL | 相应灵敏度 | 气体 | | LEL | 相应灵敏度 |
|---|---|---|---|---|---|---|---|
| **1** | **甲烷** | **5.00%** | **100** | 11 | 乙炔 | 2.50 | - |
| 2 | 丙烷 | 2.20 | 90 | 12 | 一氧化碳 | 12.50 | 160 |
| 3 | n-丁烷 | 1.80 | 90 | 13 | 丙酮 | 2.60 | 110 |
| 4 | n-戊烷 | 1.40 | 85 | 14 | 丁酮 | 1.90 | 90 |
| 5 | n-（正）己烷 | 1.20 | 80 | 15 | 甲苯 | 1.20 | 90 |
| 6 | n-庚烷 | 1.05 | 75 | 16 | 乙酸乙酯 | 2.20 | 90 |
| 7 | n-辛烷 | 0.95 | 70 | 17 | 氢气 | 4.00 | 150 |
| 8 | 甲醇 | 6.70 | 160 | 18 | 氨气 | 15.00 | 130 |
| 9 | 乙醇 | 3.30 | 120 | 19 | 汽油 （无铅） | 1.20 | 70 |
| 10 | IPA | 2.20 | 110 | 20 | 乙烯 | 2.70 | 130 |

** : 「-」 指不能检测的气体.

** : 相应灵敏度指甲烷是 100 时的相应灵敏度.

# NC-70S

NC-70S 是工业级单头型气体传感器,已被许多客户采纳用于固定应用. 传感器本身具备简易防爆功能, 但推荐安装具有 ATEX, CSA 等认证的外壳.

## ●额定值,外形,尺寸

- 供给电压 3.0V
- 电流 70 – 80mV (3.0V 供给时)
- 温度 -20 - +60℃
- 湿度 低于 95%RH (不可结露)
- 测量范围 小于 100%LEL
- 外形 见右图
- 尺寸 见右图

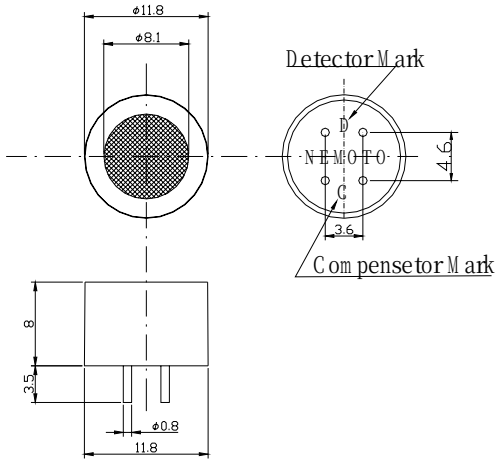


## ●标准灵敏度和空气中零点偏移

50 – 80mV/10%LEL 甲烷

空气中零点偏移 -20 至 +20mV (需零点偏移补偿电阻)

## ●相应灵敏度

| 气体 | | LEL | 相应灵敏度 | 气体 | | LEL | 相应灵敏度 |
|---|---|---|---|---|---|---|---|
| **1** | **甲烷** | **5.00%** | **100** | 11 | 乙炔 | 2.50 | - |
| 2 | 丙烷 | 2.20 | 80 | 12 | 一氧化碳 | 12.50 | 160 |
| 3 | n-丁烷 | 1.80 | 75 | 13 | 丙酮 | 2.60 | 95 |
| 4 | n-戊烷 | 1.40 | 70 | 14 | 丁酮 | 1.90 | 70 |
| 5 | n-（正）己烷 | 1.20 | 70 | 15 | 甲苯 | 1.20 | 80 |
| 6 | n-庚烷 | 1.05 | 65 | 16 | 乙酸乙酯 | 2.20 | 80 |
| 7 | n-辛烷 | 0.95 | 60 | 17 | 氢气 | 4.00 | 140 |
| 8 | 甲醇 | 6.70 | 150 | 18 | 氨气 | 15.00 | 150 |
| 9 | 乙醇 | 3.30 | 100 | 19 | 汽油 （无铅） | 1.20 | 75 |
| 10 | IPA | 2.20 | 90 | 20 | 乙烯 | 2.70 | 110 |

** : 「-」 指不能检测的气体.

** : 相应灵敏度指甲烷是 100 时的相应灵敏度.

Original issue 20030602
(Newest revision 20070220)

# General information on Nemoto sensors

# NEMOTO SENSORS

Nemoto produces GAS SENSORS and SMOKE SENSORS. Wide ranges of models are provided for users' convenience in the selection of the most suitable sensors for their applications from the vie points of target gases, detection purposes, operating conditions, and required accuracy. Generally speaking, catalytic type gas sensors are the best for flammable gases. Semiconductor type sensors and electrochemical cells would be good for detection of toxic gases and contamination gases contained in air. And thermally conductive type sensors would be suited for inert gas detection. However, the suitable sensor may differ depending on target gas concentrations to be detected. Our suggestions and recommendations will be given upon request.
The features and characteristics of each sensor will be described later in this brochure, but rough ideas are shown below for the selection of a suitable sensor depending on the kinds and concentrations of target gases. Users who are going to use our sensor for the detection of a gas concentration near the border lines are recommended to contact us for technical assistance. As far as our smoke sensors are concerned, there is no limitation in the detection ranges and applications.

* Flammable gases
Hydrogen, Methane, Propane, Iso-butane, Gasoline vapor, Ethanol, etc.

| Gas concentration | 0.001% 0.01% 0.1% 1% 10% | | |
|---|---|---|---|
| Type of sensors | <-No appropriate sensor-> | <- Catalytic type -> | <- Thermally conductive -> |

* Toxic gases
$H_2S$, SOx, HCl, Cl, CO, etc.

| Gas concentration | 0.1ppm 1ppm 10ppm 100ppm 0.1% 1% | |
|---|---|---|
| Type of sensors | <- Electrochemical -> | <- Catalytic -> |

* Incompletely combusted exhaust gases
CO, Hydrogen, unburned or oxidized hydrocarbons

| Gas concentration | 0.1ppm 1ppm 10ppm 100ppm 0.1% 1% | |
|---|---|---|
| Type of sensors | <- Electrochemical -> | <- Catalytic -> |

* Inert gases
Carbon dioxide, Freon gases

| Gas concentration | 0.01% 0.1% 1% 10% | |
|---|---|---|
| Type of sensors | <- IR absorption -> | <- Thermally conductive -> |

In addition to the above types of sensors, semiconductor type sensors are also on the market, however because of its inferior gas selectivity and complicated circuitry, we do not recommend this type of sensors for reliable gas detection and measurement.

# Line-up of Nemoto sensor

| Type | Target gases | Model No. | Detection range | Features |
|---|---|---|---|---|
| CATALYTIC | General combustible gases | NAP - 2A | iso-Butane (0.03 - 1.0%) Methane (0.05 - 2.5%) | Universal type |
| | | NAP - 55A | | Small sized, Lower power consumption |
| | | NAP - 56A | | |
| | | NAP - 50A | | Low sensitivity to ethanol, Small size |
| | | NAP - 51A | | |
| | LPG, hydrogen and organic solvent vapor | NAP - 3A | Hydrogen (0.04 - 2%) iso-Butane (0.02 - 1%) | Universal type |
| | | NAP - 66A | | Small sized, Lower power consumption |
| | | NAP - 67A | | |
| | Combustible gases for commercial use | NAP - 100AM | Methane (0.03 - 5%) iso-Butane (0.02 - 1.8%) | High performance, Commercial application , |
| | | NAP - 100AC | | |
| | | NAP - 100AH | | For hydrogen only |
| | | NAP - 100AD | | High temp. resistivity |
| | Incomplete combustion flue gas | NAP - 78A | 0.03 - 2% ($1/2H_2$ + CO) | For gas boilers, oil boilers |
| | | NAP - 79A | | |
| | Combustible Gases, hydrogen | NAP - 130 | Methane (0.05 - 5%) Hydrogen (0.04 - 4%) | For hydrogen fuel cell |
| | | NSU - 131A | | |
| | | NSU - 131AF | | |
| Thermally conductive | Carbon di-oxide | NAP - 21A | 2 - 100% | Universal type |
| Electro-chemical | Carbon mono-oxide | NAP - 505 | CO 10 - 1000ppm | High accuracy, |
| | | NAP - 503 | | Low sensitivity to hydrogen |
| | Formaldehyde | NAP - 740 | 0 - 50ppm | High accuracy, High reliability |
| Polymer Resistance type | Relative Humidity | NHS-12 | 10-90%RH | For low humidity |
| | | NHS-20 | 20-95%RH | Standard type |
| | | NHS-25 | 20-100%RH | Highly durable to dew condensation |
| Ionization Type | General smoke | NIS - 02A | 0.5 - 5 % / foot** | Out of radioactive source (Lower than exemption) |
| | | NIS - 02C | | |
| | | NIS - 09C | | Universal type |
| | | NIS - 05A | | Lower radioactivity |

** : Unit for light blockage ratio by smoke.

# Catalytic type

Catalytic type gas sensors are Nemoto's specialty, and various kinds of gas sensors are provided for customers' selection. The main application is for gas detectors. Catalytic type sensors are much stable compared to semiconductor type gas sensors, and do not need any CPU for making detectors. Thus catalytic type gas sensors enable users to design flexible circuits for lower-cost gas detectors. The general features of Nemoto's catalytic gas sensors are as below.

1. Basic characteristics:
* Good output linearity to gas concentrations up to LEL, especially excellent linearity in the range below 50% of LEL.
* Excellent repeatability of gas sensitivity. Variability within a day would be less than +/- 5%.
* Speedy response. 90% response time of residential models is less than 20 sec.
* Hardly affected by ambient temperature and humidity. No compensation circuit is required for residential applications.
* Least individual differences and simple calibration on detectors.
* Short initial stabilization time.
* Less affected by supply voltage variation. Stabilized supply voltage is not needed.

2. Durability, Long-term stability
* Excellent stability under 60°C.
* Durable under high temperature and humidity (50°C, 95% RH).
* Not affected by long-term storage under high temperature and humidity (50°C, 95% RH).
* Resistive against vibration and impact.
* Durable against corrosive gases such as hydrogen sulfide.
* Durable against silicone gases (HMDS 10ppm).
* Acceleration tests have proved a long life more than 10 years.

3. Usage
* Not like semiconductor type sensors, a long preparatory aging time is not necessary for performance stabilization.
* In case of gas detector applications, aging for 10 minutes would be enough before calibration. Calibration can be done in air without a test gas.
* Variation of ambient temperature & humidity or existence of noise gases does not affect to the characteristics of Nemoto sensors. It is not needed to create special ambient conditions for calibration.

4. Applications
* Gas leakage detectors
* Incomplete combustion alarms
* For water heaters
* Alcohol checkers, Gas densitometers
* For gasoline feeders

# Electrochemical type gas sensors

This is one of our main products in addition to the Hot-wire type sensors. Because of the limitation of its detection method, detectable gases are limited such as toxic gases and incompletely combusted flue gases etc., however electrochemical sensors show far superior accuracy and gas selectivity compared to semiconductor type sensors. It was said that electrochemical type sensors had a problem of a shorter life, but Nemoto electrochemical sensors are uniquely designed in the electrodes to have excellent accuracy and consistency so that these sensors can be applied for maintenance-free residential detectors. Nemoto electrochemical sensors have also an innovative structure to have realized the smallest size in the world. This small size gives flexibility in the component positioning when detectors are designed. There are two series of Nemoto electrochemical sensors, i.e. the 5 series for general use and the 7 series mainly used for industrial applications. The 5 series includes a special type which electrode pins can be directly soldered with PCBs. The superior features are described below.

1. Basic features:

- The output signal is linear in the practical detection range of various target gases.
- The excellent repeatability of gas sensitivity. Output signals fall into a range of ± 2% or less.
- The faster response time. Electrochemical sensors generally do not have a quick response time, but Nemoto electrochemical sensors show a relatively quick response characteristic. 90% response time is within 30 seconds.
  * When a simple temperature compensation circuit is added for the range of 20°C ~ 50°C, the accuracy falls into ± 10% tolerance. Nemoto electrochemical sensors are hardly affected by humidity.
- The individual differences are so small that alarm concentration can be adjusted by a uniformed calibration.
- Initial output is stabilized in a short time after energized.

2. Durability and long term stability

- Detection accuracy is unchanged after use for 5,000 hours under 60°C and 90%RH.
- Gas sensitivity is unchanged after use for 5,000 hours under 60°C and 15%RH.
- Excellent resistivity to vibrations and shocks that are expected in common environment.
- The sensors are not affected by silicon gases at all.
- 5 year life is guaranteed for the standard type NAP-505.

3. Usage

- Different form semiconductor type sensors, Nemoto electrochemical sensors do not need preparatory aging at all.
- In case of use for residential detectors, calibration is not required because the individual differences are negligible.
- False-alarm-free because of no response to noise gases.
- Battery operation is possible because the sensors do not have a heater.

4. Applications

- For incomplete combustion detectors, CO detectors, toxic gas detectors.
- For combustion controllers for stoking equipment, monitors for indoor environment.
- Various gas densitometers, measuring equipment.

# NAP-2A

NAP-2A is a universal type of sensor for flammable gases and can be used for gas detectors as well as for gas densitometers. The following are the ratings and output characteristics of this sensor. It is recommended to refer to the individual user's manual for further information.

## * Target gases and concentration

| Gases | | Detection range |
|---|---|---|
| Methane | $CH_4$ | 0.05 ~ 5%(0.05 ~ 2%) |
| Propane | $C_3H_8$ | 0.03 ~ 2.2%(0.03~ 1%) |
| Iso-butane | Iso-$C_4H_{10}$ | 0.03 ~ 1.8%(0.03 ~ 0.8%) |
| Hydrogen | $H_2$ | 0.05 ~ 4%(0.05 ~ 1.5%) |
| Ethanol | $C_2H_5OH$ | 0.05 ~ 3.2%(0.05 ~ 1.5%) |
| Hydrocarbons | $C_nH_{2n+2}$ | 1~100% LEL (1~50%LEL) |

( ) is a detection range in high accuracy

## * Ratings

| Items | Specifications |
|---|---|
| Supply voltage | DC 2.20 +/- 0.22V<br>AC 2.20 +/- 0.22V (r.m.s. 50~60Hz) |
| Current (When 2.2V is supplied) | DC 340 ~ 380mA<br>AC 340 ~ 380mA (r.m.s. 50~60Hz) |
| Ambient Temperature | In operation -10 ~ +50℃<br>In storage -10 ~ +60℃ |
| Ambient humidity | In operation 95%RH or less<br>In storage 99%RH or less<br>(No dew condensation) |

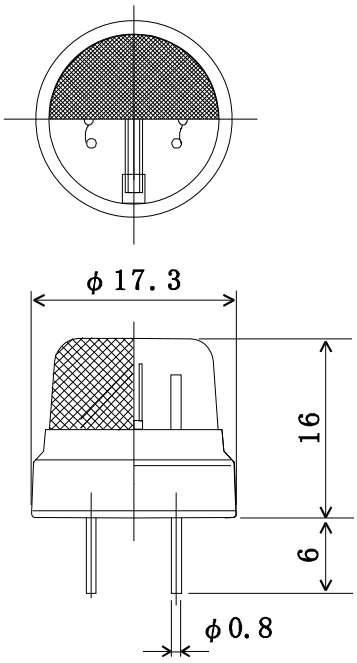


Structure & appearance of NAP－2A

## * Gas sensitivity characteristics

| Gas & Concentration | Output voltage |
|---|---|
| Output in clean air | -35 ~ +35 mV |
| Methane 3000ppm | 14 ~ 22 mV |
| Iso-butane 1400ppm | 12 ~ 18 mV |
| Hydrogen 1400ppm | 9 ~ 15 mV |
| Ethanol 1400ppm | Less than 15mV |

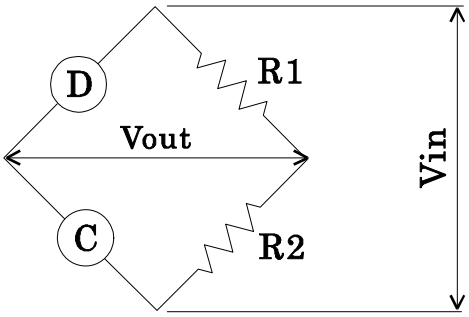


R1,R2;200Ω Metal-covered

Recommended measuring circuit

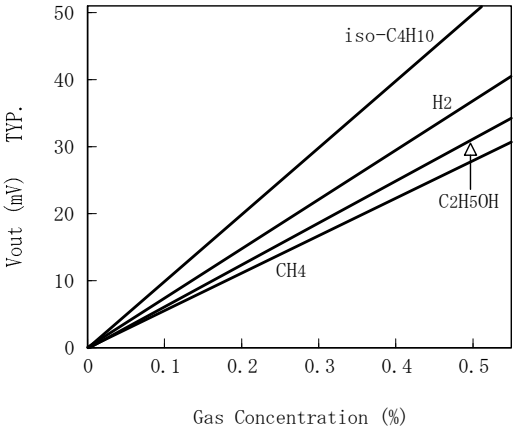


Gas sensitivity characteristics

# NAP-3A

NAP-3A is a universal type of LP Gas sensor, and is used for LP Gas detectors, leakage testers, and gas densitometers. The following are the ratings and output characteristics of this sensor. It is recommended to refer to the individual user's manual for further information.

## * Target gases and concentration

| Gases | | Detection range |
|---|---|---|
| Propane | $C_3H_8$ | 0.03 ~ 2.2%(0.03 ~ 1%) |
| Iso-butane | Iso-$C_4H_{10}$ | 0.03 ~ 1.8%(0.03 ~ 0.8%) |
| Hydrogen | $H_2$ | 0.05 ~ 4%(0.05 ~ 1.5%) |
| Ethanol | $C_2H_5OH$ | 0.05 ~ 3.2%(0.05 ~ 1.5%) |
| Hydrocarbons | $C_nH_{2n+2}$ | 1~100%LEL(1~50%LEL) |

( ) is a detection range in high accuracy

## * Ratings

| Items | Specifications |
|---|---|
| Supply voltage | DC 1.75 +/- 0.175V<br>AC 1.75 +/- 0.175V (r.m.s. 50~60Hz) |
| Current (when 1.75V is applied) | DC 310 ~ 350mA<br>AC 310 ~ 350mA (r.m.s. 50~60Hz) |
| Ambient Temperature | In operation -10 ~ +50℃<br>In storage -10 ~ +60℃ |
| Ambient humidity | In operation 95%RH or less<br>In storage 99%RH or less<br>(No dew condensation) |

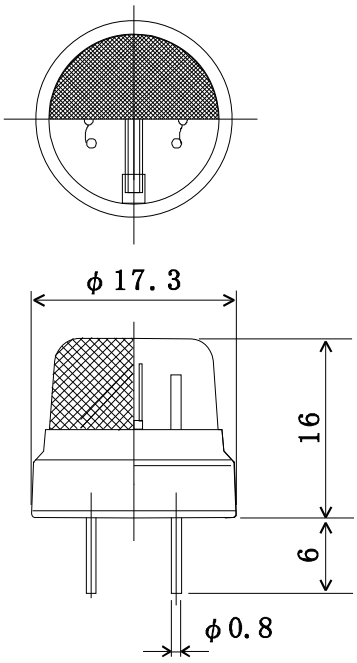


Structure & appearance of NAP-3A

## Gas sensitivity characteristics

| Gas and concentration | Output voltage |
|---|---|
| Output in clean air | -35 ~ +35mV |
| Iso-butane 1400ppm | 12 ~ 18mV |
| Hydrogen 1400ppm | 9 ~ 15mV |
| Ethanol 1400ppm | Less than 15mV |

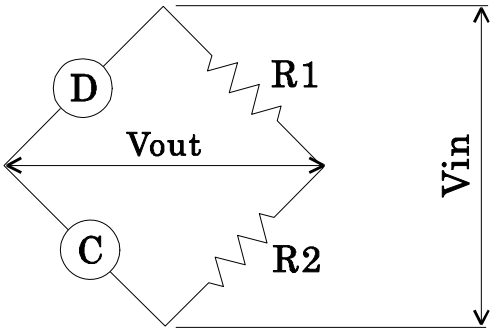


R1,R2;200Ω Metal-covered

Recommended measuring circuit

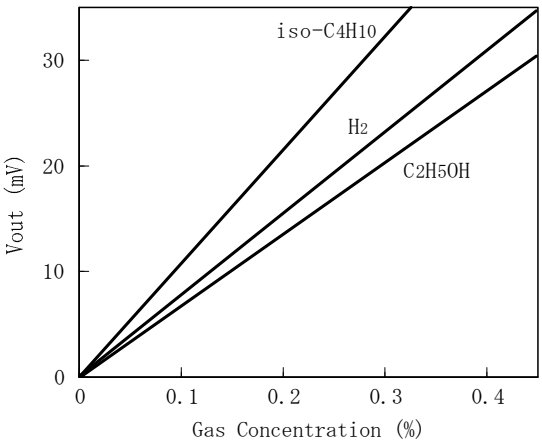


Gas sensitivity characteristics

# NAP-66A

NAP-66A is a miniature & low power consumption type of NAP-3A, and is mainly used for gas detectors and leak testers. 66A is a half in height and needs a half in power consumption compared to 3A so that thinner and lighter-weight detectors can be produced. The following are the basic characteristics but it is recommended to refer to the individual user's manual for further information. A measuring circuit for sensor evaluation is the same as NAP-3A.

* Target gases and concentration

| Gases | | Detection range |
|---|---|---|
| Propane | $C_3H_8$ | 0.03 ~ 2.2% (0.03 ~ 1%) |
| Iso-butane | Iso-$C_4H_{10}$ | 0.03 ~ 1.8% (0.03 ~ 0.8%) |
| Hydrogen | $H_2$ | 0.05 ~ 4% (0.05 ~ 1.5%) |
| Ethanol | $C_2H_5OH$ | 0.05 ~ 3.2% (0.05 ~ 1.5%) |
| Hydrocarbons | $C_nH_{2n+2}$ | 1~100% LEL (1~50%LEL) |

( ) is a detection range in high accuracy

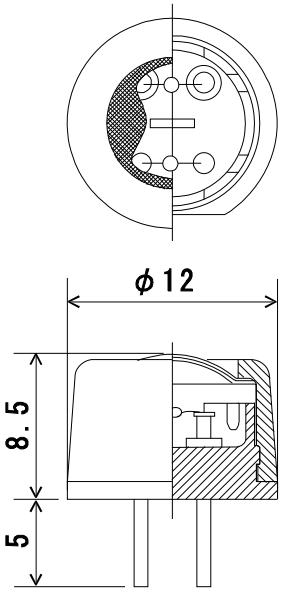


Structure & appearance of NAP-66A

* Ratings

| Items | Ratings |
|---|---|
| Supply Voltage | DC 2.0 ± 0.2V<br>AC 2.0 ± 0.2V (r.m.s. 50~60Hz) |
| Current (When 2.0V is applied) | DC 140 ~ 160mA<br>AC 140 ~ 160mA (r.m.s. 50~60Hz) |
| Ambient Temperature | In operation -10 ~ +50℃<br>In storage -10 ~ +50℃ |
| Ambient humidity | In operation 95%RH or less<br>In storage 99%RH or less<br>(No dew condensation) |

* Gas sensitivity characteristics

| Gases and concentration | Output voltage |
|---|---|
| Output in clean air | -35 ~ +35mV |
| Iso-butane 1400ppm | 10 ~ 15mV |
| Hydrogen 1400ppm | 7 ~ 12mV |
| Ethanol 1400ppm | Less than 11mV |

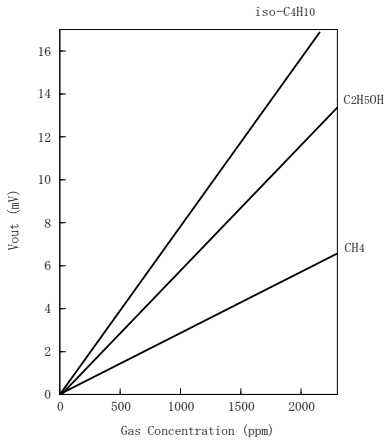


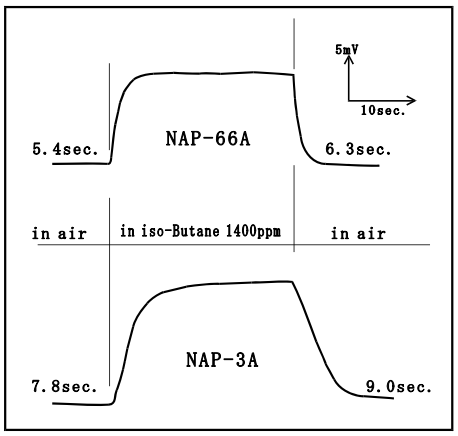


Gas sensitivity characteristics Response characteristics

# NAP-55A

NAP-55A is a miniature & low power consumption type of NAP-2A, and is mainly used for gas detectors and leak testers. 55A is a half in height and needs a half in power consumption compared to 2A so that thinner and lighter-weight detectors can be produced. The following are the basic characteristics but it is recommended to refer to the individual user's manual for further information. A measuring circuit for sensor evaluation is the same as NAP-2A.

## * Target gases and concentration

| Gases | | Detection range |
|---|---|---|
| Methane | $CH_4$ | 0.05 ~ 5% (0.05 ~ 2%) |
| Propane | $C_3H_8$ | 0.03 ~ 2.2% (0.03 ~ 1%) |
| Iso-butane | Iso-$C_4H_{10}$ | 0.03 ~ 1.8% (0.03 ~ 0.8%) |
| Hydrogen | $H_2$ | 0.05 ~ 4% (0.05 ~ 1.5%) |
| Ethanol | $C_2H_5OH$ | 0.05 ~ 3.2% (0.05 ~ 1.5%) |
| Hydrocarbons | $C_nH_{2n+2}$ | 1~100%LEL (1~50%LEL) |

( ) is a detection range in high accuracy

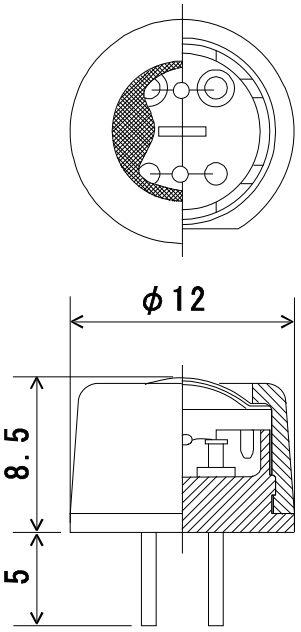


Structure & Appearance of NAP-55A

## * Ratings

| Items | Specifications |
|---|---|
| Supply Voltage | DC 2.5 +/- 0.25V<br>AC 2.5+/- 0.25V (r.m.s. 50~60Hz) |
| Current (When 2.5V is applied) | DC 150 ~ 170mA<br>AC 150 ~ 170mA (r.m.s. 50~60Hz) |
| Ambient Temperature | In operation -10 ~ +50℃<br>In storage -10 -~+50℃ |
| Ambient humidity | In operation 95%RH or less<br>In storage 99%RH or less<br>(No dew condensation) |

## * Gas sensitivity characteristics

| Gases & concentration | Output voltage |
|---|---|
| Output in clean air | -35 ~ +35mV |
| Methane 3000ppm | 10 ~ 16mV |
| Iso-butane 1400ppm | 10 ~ 15mV |
| Hydrogen 1400ppm | 7 ~ 12mV |
| Ethanol 1400ppm | Less than 11mV |

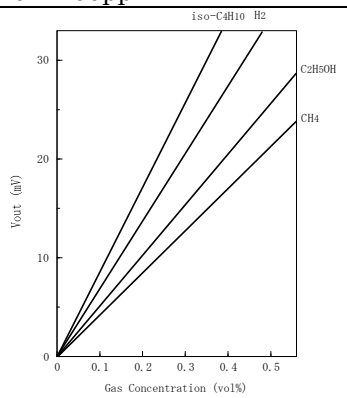


Gas sensitivity characteristics

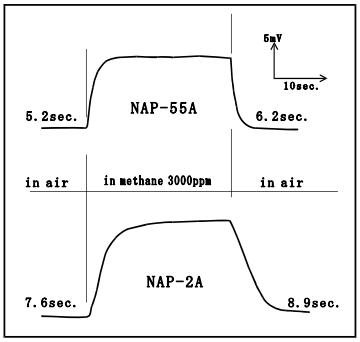


Response characteristics

# NAP-50A

NAP-50A is a miniature & low power consumption type of NAP-2A, and is mainly used for gas detectors. Compared to NAP-55A, NAP-50A has a lower alcohol sensitivity to eliminate false alarms caused by alcohol, thus more reliable gas detectors can be produced with NAP-50A. The following are the basic characteristics but it is recommended to refer to the individual user's manual for further information. See NAP-2A for measuring circuit for sensor evaluation.

## * Target gases and detection range

| Gases | | Detection range |
|---|---|---|
| Methane | $CH_4$ | 0.05 ~ 5% (0.05 ~ 2%) |
| Ethane | $C_2H_6$ | 0.05 ~ 3.2% (0.05 ~ 1.5%) |
| Iso-butane | Iso-$C_4H_{10}$ | 0.03 ~ 1.8% (0.03 ~ 0.8%) |
| Hydrogen | $H_2$ | 0.05 ~ 4% (0.05 ~ 1.5%) |
| Hydrocarbons | $C_nH_{2n+2}$ | 1~100% LEL (1~50%LEL) |

( ) is a detection range in high accuracy

## * Ratings

| Items | Specifications |
|---|---|
| Supply voltage | DC 2.5 +/- 0.25V<br>AC 2.5 +/- 0.25V (r.m.s. 50~60Hz) |
| Current (When 2.5V is applied) | DC 150 ~ 170mA<br>AC 150 ~ 170mA (r.m.s. 50~60Hz) |
| Ambient Temperature | In operation -10 ~ +50℃<br>In storage -10 ~ +50℃ |
| Ambient humidity | In operation 95%RH or less<br>In operation 99%RH or less<br>(No dew condensation) |

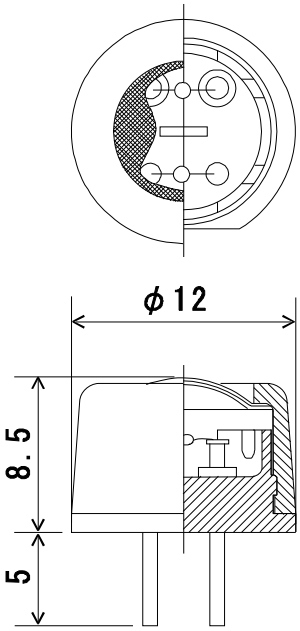


Structure & Appearance of NAP-50A

## * Gas sensitivity characteristics

| Gases & concentration | Output voltage |
|---|---|
| Output in air | -35 ~ +35mV |
| Methane 3000ppm | 10 ~ 16mV |
| Iso-butane 1400ppm | 9 ~ 14mV |
| Hydrogen 1400ppm | 7 ~ 12mV |
| Ethanol 1% | Less than 10mV |

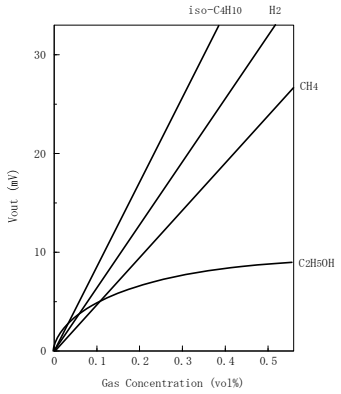


Gas sensitivity characteristics

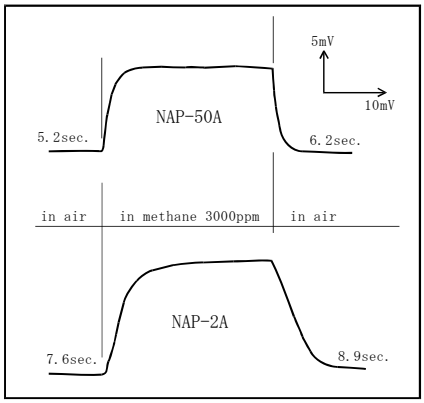


Response characteristics

# NAP-56A

NAP-55A has been followed by a new version, NAP-56A that is not made with thermoplastics to achieve a higher temperature resistivity. The pin locations and dimensions are compatible to NAP-55A for the convenience of current users of Nemoto NAP-55A. The gas sensitivity is better than NAP-55A by about 15%. Users are to pay attention to this higher gas sensitivity upon calibration.

・Target gases & concentration

| gases | | Detection range |
|---|---|---|
| Methane | $CH_4$ | 0.05－5%<br>(0.05－2%) |
| Ethane | $C_2H_6$ | 0.05－3.2%<br>(0.05－1.5%) |
| Hydrogen | $H_2$ | 0.05－4%<br>(0.05－1.5%) |
| Hydro-carbons | $C_nH_{2n+2}$ | 1-100%LEL<br>(1-50%LEL) |

(　) = Detection range with high accuracy

・Ratings

| Item | Ratings |
|---|---|
| Supply voltage | DC 2.5±0.25V<br>AC 2.5±0.25V(RMS 50-60Hz) |
| Current (2.5Vapplied) | DC 150－170mA<br>AC 150－170mA(RMS 50-60Hz) |
| Ambient temperature | Usage　－10 ~ +50℃<br>Storage　－10 ~ +50℃ |
| Ambient humidity | Usage　95%RH or less<br>Storage 99%RH or less but no dew Condensation. |

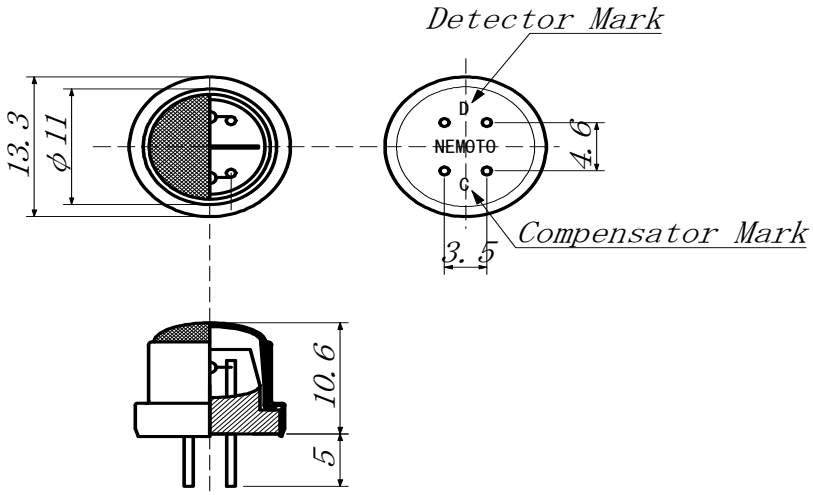


Fig. Appearance and structure of NAP－56A

・Gas sensitivity characteristics

| Gases and concentration | Output values |
|---|---|
| Output in clean air | －35 ~ +35mV |
| Methane 3,000ppm | 15 ~ 23mV |
| Iso-butane 1,400ppm | 12 ~ 18mV |
| Hydrogen 1,400ppm | 10 ~ 17mV |

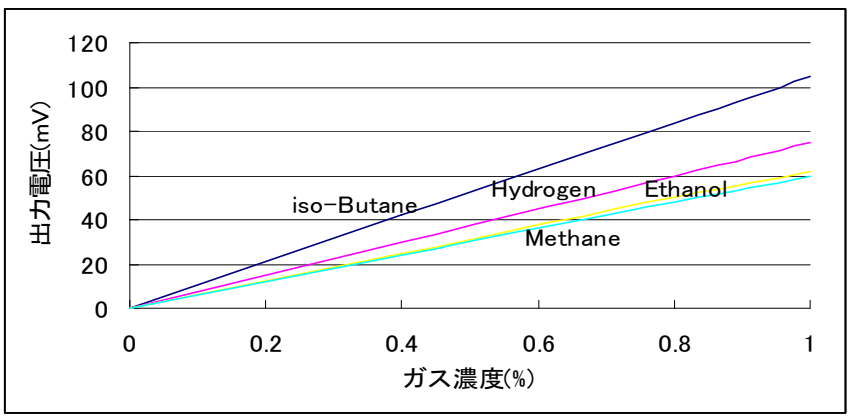

# NAP-67A

NAP-66A has been followed by a new version, NAP-67A that is not made with thermoplastics to achieve a higher temperature resistivity. The pin locations and dimensions are compatible to NAP-66A for the convenience of current users of Nemoto NAP-66A. The gas sensitivity is better than NAP-66A by about 15%. Users are to pay attention to this higher gas sensitivity upon calibration.

・Gas sensitivity characteristics

| Gases | | Detection range |
|---|---|---|
| Propane | $C_3H_8$ | 0.03－2.2%<br>(0.03－1%) |
| Iso-butane | $C_4H_{10}$ | 0.03－1.8%<br>(0.03－1%) |
| Hydrogen | $H_2$ | 0.05－4%<br>(0.05－1.5%) |
| Hydro-carbons | $C_nH_{2n+2}$ | 1-100%LEL<br>(1-50%LEL) |

(　) = Detection range with high accuracy

・Ratings

| Items | Ratings |
|---|---|
| Supply voltage | DC 2.0±0.2V<br>AC 2.0±0.2V(RMS 50-60Hz) |
| current (2.0V applied) | DC 140－160mA<br>AC 140－160mA(RMS 50-60Hz) |
| Ambient temperature | Usage －10 － +50℃<br>Storage －10 － +50℃ |
| Ambient humidity | Usage 95%RH or less<br>Storage 99%RH or less but no dew condensation |

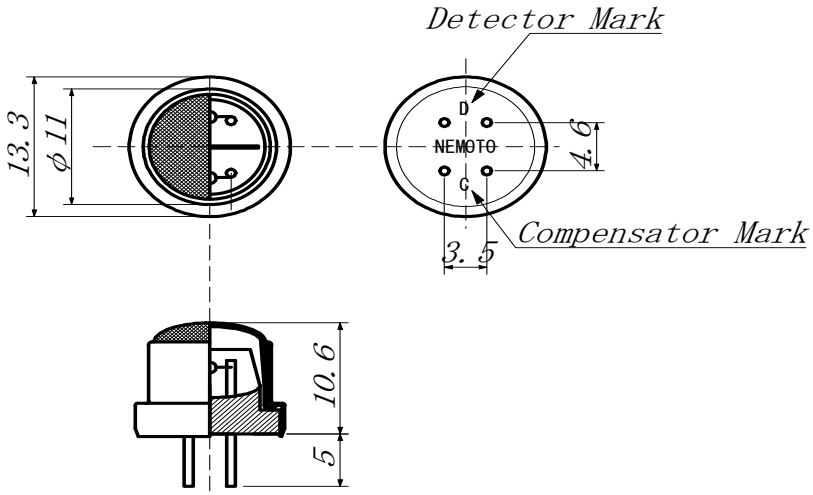


Fig. Appearance and structure of NAP－67A

・Gas sensitivity characteristics

| Gases and concentration | Output values |
|---|---|
| Output in clean air | －35 ~ +35mV |
| Iso-butane 1,400ppm | 12 ~ 18mV |
| Hydrogen 1,400ppm | 10 ~ 17mV |
| Ethanol 1,400ppm | 8 ~ 16mV |

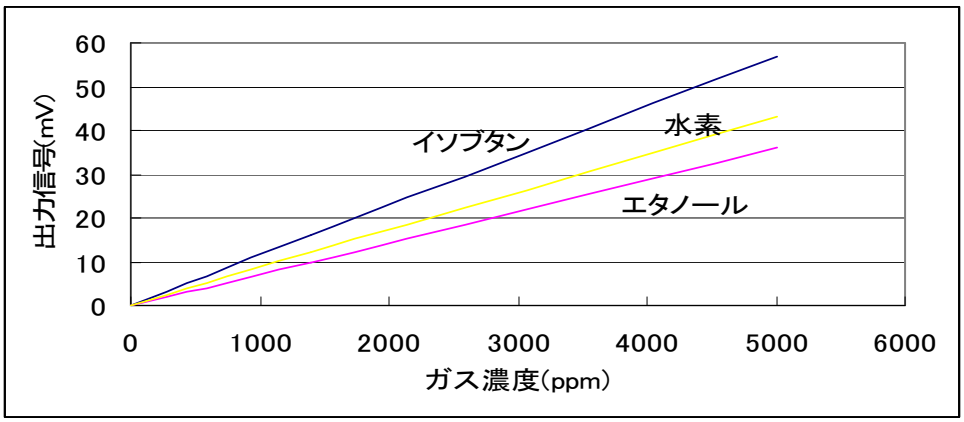

# NAP-78A

NAP-78A is a gas sensor for monitoring incomplete combustion. 78A can be installed in a flue duct for direct monitoring on stoking equipment. Usually this type of sensor has individual temperature dependency to require an individual compensation circuit, but this has been the cause of the high cost of such sensors to eventually impede the popularization, however, 78A's temperature dependency can be compensated by a simple circuit and does not need an individual circuit.

## * Ratings

| Item | Specifications |
|---|---|
| Supply voltage | DC 2.0 +/- 0.1V<br>AC 2.0 +/-0.1V (r.m.s. 50~60Hz) |
| Heat cleaning voltage | DC 2.75 +/- 0.1V<br>AC 2.75 +/- 0.1V (r.m.s. 50~60Hz) |
| Heat cleaning cycles | 1 min. only upon switch-on |
| O2 concentration | 1 ~ 21% |
| $CO/H_2$ | 1/1 ~ 1/4 |
| Current (When 2.0V is applied) | DC140 ~ 160mA<br>AC140 ~ 160mA (r.m.s. 50~60Hz) |
| Ambient temperature | In operation 0 ~ +200℃<br>In storage -10 ~ +50℃ |
| Ambient humidity | In operation 95%RH or less<br>In storage 99%RH or less<br>(No dew condensation) |

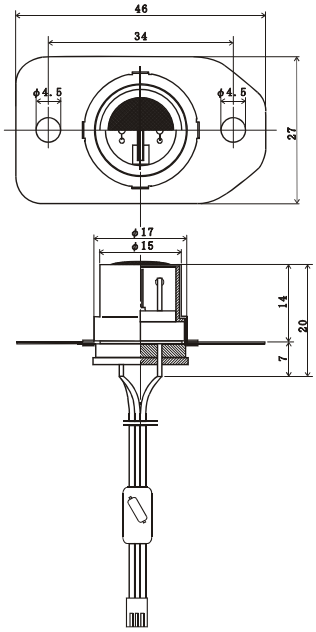


Structure & appearance of NAP-78A

## * Gas sensitivity characteristics

| Gases and concentration | Output voltage |
|---|---|
| Output in clean air | +8.0 ~ +12.0 mV |
| CO 1000ppm + $H_2$ 500ppm | 6 - 7mV (Normal Temp.), 4 - 5mV (200℃) |
| Temperature dependency at Zero point | Zero point variation +/- 1.0mV or less between normal temperature and 200℃ |

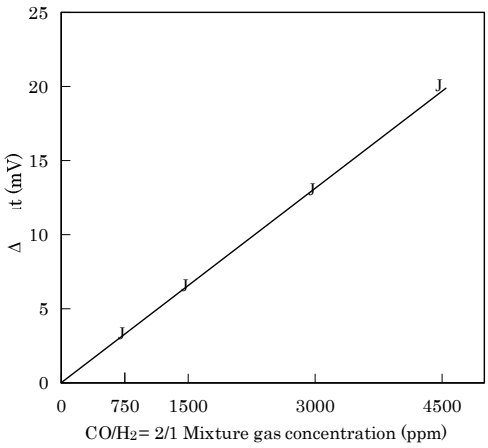


Gas sensitivity characteristics

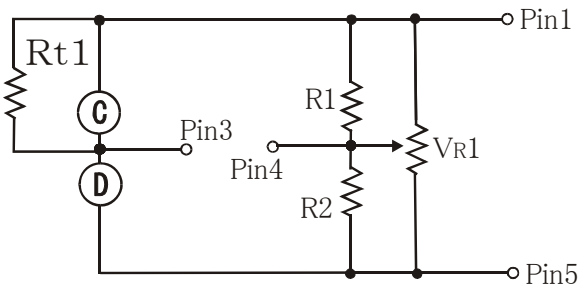


Circuit with component

# NAP-79A

NAP-79A is a moderately-priced version of NAP-78A, and to be installed in an exhaust duct of a stoking equipment for direct monitoring of the exhaust gas as same as the conventional version NAP-78A. Difference from NAP-78A, the components are minimized (Harness and intermediary PC board have been eliminated) so that this new version NAP-79A can be used for lower-priced stoking equipment. The equivalent performances as NAP-78A are guaranteed when an initial output value is read to set the zero point. Heat cleaning cycles are recommended for NAP-78A, but the cycles can be skipped for NAP-79A if simplified control is required.

・Ratings

Please refer to the page of NAP-78A since every item is exactly same as NAP-78A.

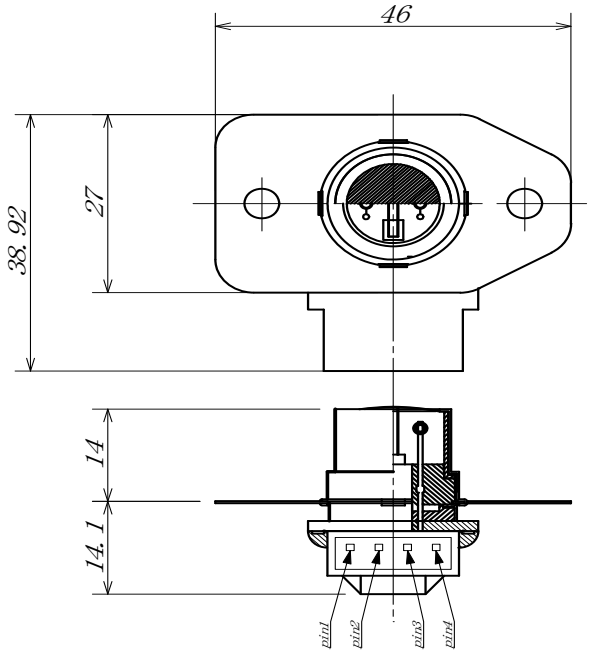


Fig. Appearance and structure of NAP－79A

・Gas sensitivity characteristics

| Gases and concentration | Output values |
|---|---|
| Output in clean air | 40~－120mV |
| CO 1,000ppm + $H_2$ 500ppm | 7 ~ 9mV (room Temp.), 5 ~ 7mV( 200°C) |
| Temperature characteristics at Zero point | Output variation between room temperature and Zero point = less than ± 1.0mV |

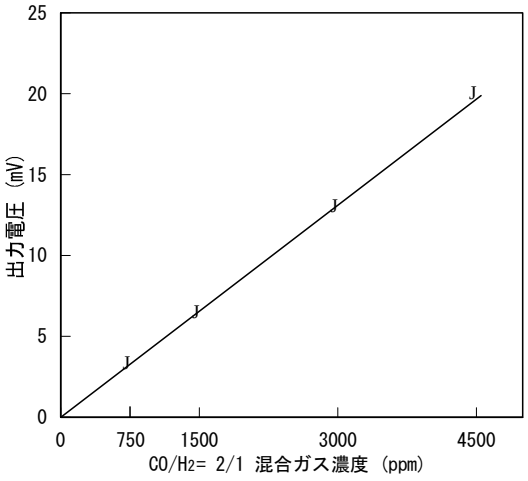


Fig. Gas sensitivity feature

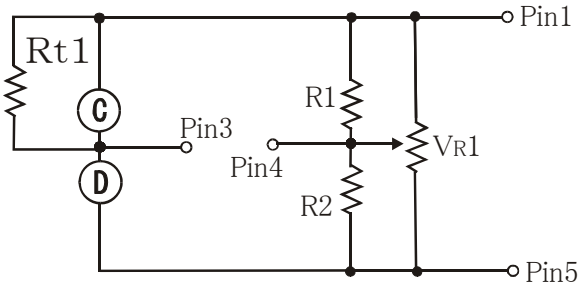


Fig. Circuit with components

# NAP-100 Series

NAP-100 series are flammable gas sensors for industrial applications, and 4 types are provided for users' choice. For detailed technical information, please refer to the individual user's manuals.

* Ratings and gas sensitivity

| Items | NAP-100AM | NAP-100AC | NAP-100AD | NAP-100AH |
|---|---|---|---|---|
| Supply voltage | 2.6V | 2.6V | 2.6V | 1.6V |
| Current | 160 ~ 180mA | 160 ~ 180mA | 160 ~ 180mA | 120 ~ 140mA |
| Ambient temp. & humidity in operation | -10 ~ +50℃<br>95%RH or less | -10 ~ +50℃<br>95%RH or less | 260℃ or less<br>95%RH or less | 260℃ or less<br>95%RH or less |
| Ambient temp. & humidity in storage | -20 ~ +60℃<br>99%RH or less | -20 ~ +60℃<br>99%RH or less | -20 ~ +60℃<br>99%RH or less | -20 ~ +60℃<br>99%RH or less |
| Applications | Universal type | For higher conc. | For high temp. | For $H_2$ only |
| Target gases | Flammable | Flammable | Flammable | $H_2$、CO |
| Detection range in high accuracy | 1 ~ 50%LEL | 3 ~ 100%LEL | 1 ~ 50%LEL | 1 ~ 50%LEL |

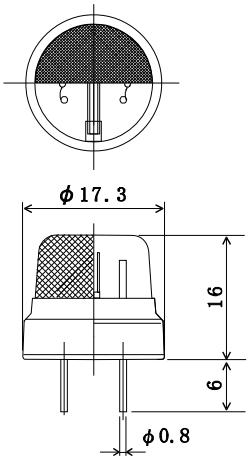


Structure of NAP-100AM

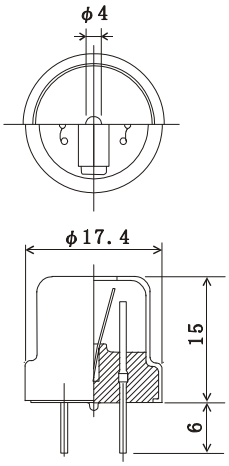


Structure of 100AC

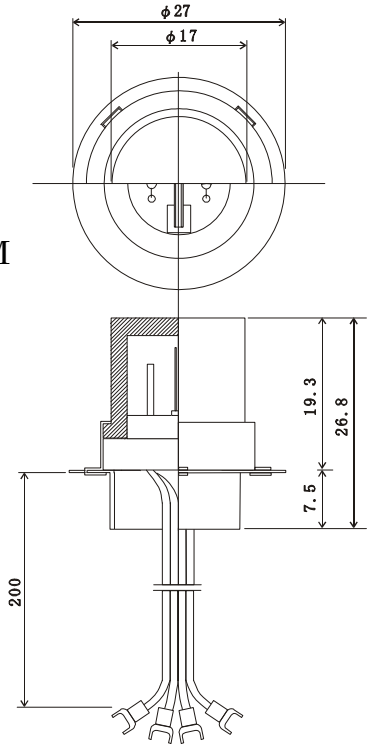


Structure of 100AD

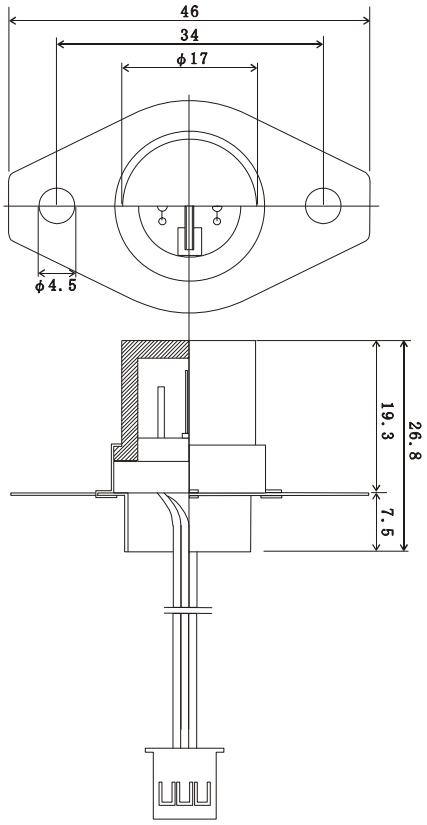


Structure of 100AH

# NAP-130A

NAP-130 is a simple gas sensing unit which output voltage in air has been calibrated. When the rated DC voltage is supplied to the unit, it puts out in mV order and reaches to 0mV in the existence of around 10%LEL of methane or hydrogen gas. Calibration is done depending on users' requirements, but setting at around 10%LEL is recommended for reliable gas detection in consideration of variation of temperature/humidity and presence of tiny quantity of noise gases.

* Ratings and specifications

| Item | Specifications |
|---|---|
| Supply voltage | DC 2.5 +/- 0.1V |
| Current | DC 150 – 170mA (2.5V is supplied.) |
| Ambient temperature | In operation -20 - +80 degree C<br>In storage -20 - +70 degree C |
| Ambient humidity | Less than 95%RH,<br>not dew condensation |
| Recommended initial insensitive time | 90sec. |
| Response time | T90 : Less than 30sec. |
| Recommended calibration | 10 +/- 1%LEL, Methane : 4500 – 5500ppm,Hydrogen : 3600 – 4400ppm |
| Acceptable calibration | 5 – 25%LEL |
| Output in air | -27 - -33mV |

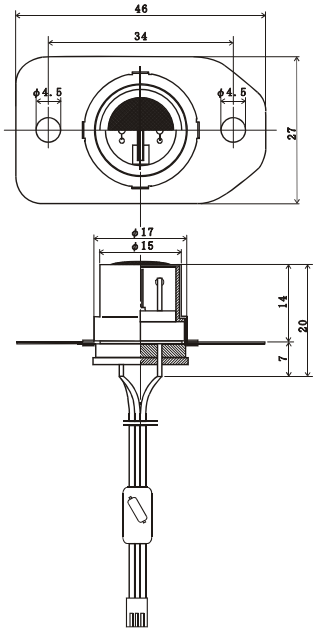


Structure & appearance of NAP-130

*Terminal explanation

| | | |
|---|---|---|
| No.1 | +2.5V | Red |
| 2 | Unused | - |
| 3 | Output (+) | Yellow |
| 4 | Output (-) | Green |
| 5 | GND. | Black |

Remarks) GND. does not have to short-circuit with output (-).

This sensor is installed in outer cases of fixed type fuel cells and gas engines for the purpose of gas leakage detection. Wire length should be less than 2m long, and please do not use connectors other than our recommended ones.

# NSU-131A、NSU-131AF

NSU-131A and 131AF are ready-for-use units with Nemoto's hot-wire type gas sensors already calibrated. Outputs are obtained in mV order when the rated DC voltage is supplied to the units. The alarm concentration is preset at 10% of LEL of natural gas or hydrogen gas, but custom calibration is available upon request.

・Ratings

| items | NSU-131A | NSU-131AF |
|---|---|---|
| Supply voltage | DC 2.5 ± 0.1V | DC 2.5 ± 0.1V |
| Current when rated voltage is supplied | DC150 ~ 170mA | DC150 ~ 170mA |
| Ambient temperature | Usage －20 ~ +80℃ Storage －20 ~ +70℃ | |
| Ambient humidity | Usage <95%RH, Storage <95%RH (without dew condensation) | |

・Standard specifications

| Items | NSU-131A | NSU-131AF |
|---|---|---|
| Delay at initially energized | 90 Seconds | |
| Response speed | 90% response within 30 seconds | |
| Calibrated Alarm concentration | 10 ± 1% LEL、Methane 4,500 ~ 5,500ppm, Hydrogen 3,600 ~ 4,400ppm | |
| Calibration range | 5 ~ 25% LEL | |
| Output in clean air | -23 ~ -29mV | -18 ~ -22mV |

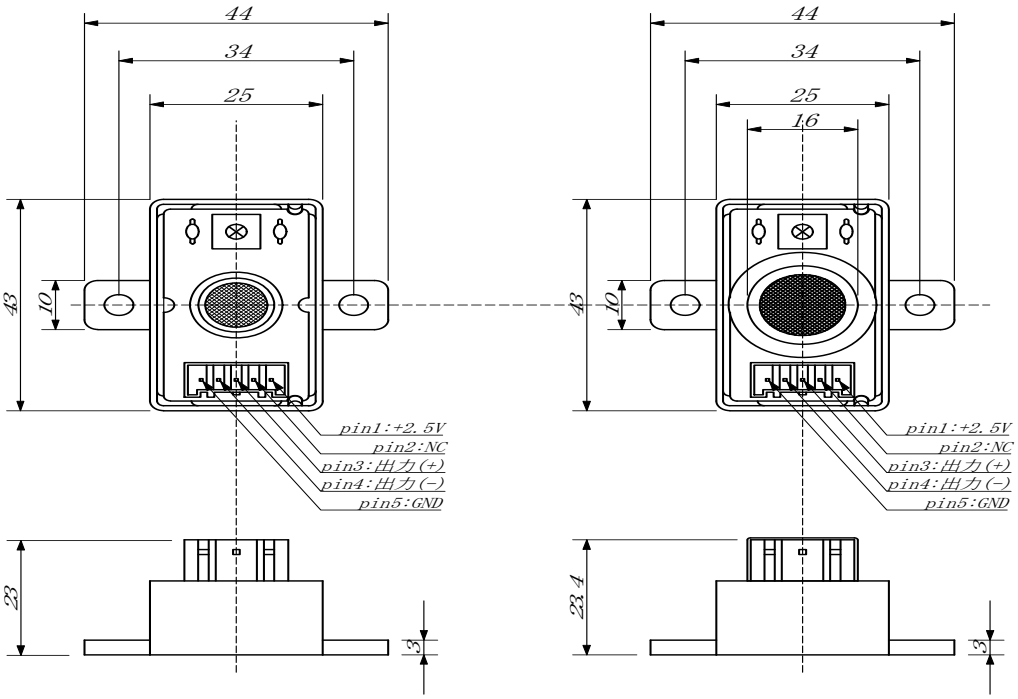


NSU－131A　　NSU－131AF

・Terminals

| | |
|---|---|
| No.1 | +2.50V |
| 2 | Not used |
| 3 | Output signal (+) |
| 4 | Output signal (–) |
| 5 | GND. |

Remarks) GND and output signal (–) terminals are separately provided.
Please do not short-circuit these terminals.

# NAP-21A

NAP-21A is a thermal-conductive type gas sensor to detect gases making use of the variation of the thermal conductivity of a target gas. This sensor is suitable for detection of highly concentrated gases more than percent order or inert gases that are not chemically reacted.

* Ratings and Gas sensitivity

| Items | NAP-21A |
|---|---|
| Supply voltage | DC 1.8 ± 0. 1V |
| Current | 120 ~ 130mA (1.8V applied) |
| Ambient Temp. & humidity in operation | -10 ~ +50°C, 95%RH or less |
| Ambient Temp. & humidity in operation | -20 ~ +60°C, 99%RH or less |
| $CO_2$ gas sensitivity | 0.2mV / %$CO_2$ |

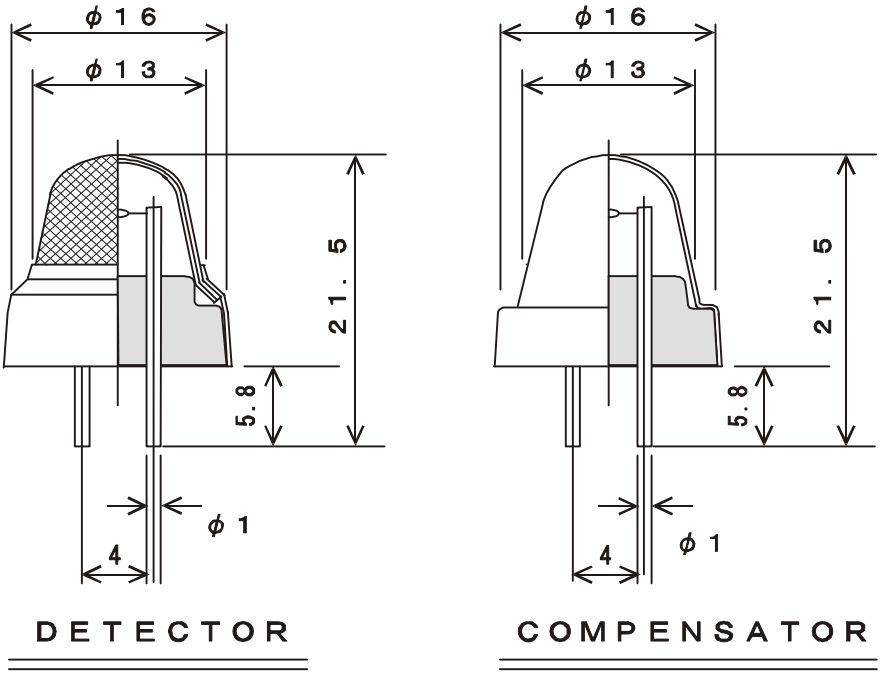


Structure of NAP-21A

This sensor detects the changes of outputs when the thermal conductivity of the ambient atmosphere becomes different from the conductivity of the air. More specifically, the output shifts towards (+) side when the target gas has a larger molecular weight than the air, and shifts towards (-) side in case of a smaller molecular weight. The output characteristic of this sensor shows excellent linearity to the gas concentrations that is good enough to measure concentrations up to 100%. However, this sensor is humidity-dependent (As "humidity is "steam" which makes the output shift towards (-) side.), a compensation circuit would be needed upon designing circuits. Because of these characteristics, this sensor is suitable for $CO_2$ gas measurement & $CO_2$ gas monitoring in containers for vegetables & fruits etc.

# NAP-503

NAP-503 is a newly-developed version of NAP-505. The appearance and structure are exactly same as NAP-505, but this new version has a lower sensitivity to hydrogen gas. While NAP-505's sensitivity to hydrogen gas is about 40% of the sensitivity to CO gas, but NAP-503's sensitivity to hydrogen gas is only about 10% of the sensitivity to CO gas. Thus NAP-503 has much better gas selectivity. An appropriate type can be selected depending on users' applications. As there are various types of NAP-503 as shown below, please contact us for detailed information.

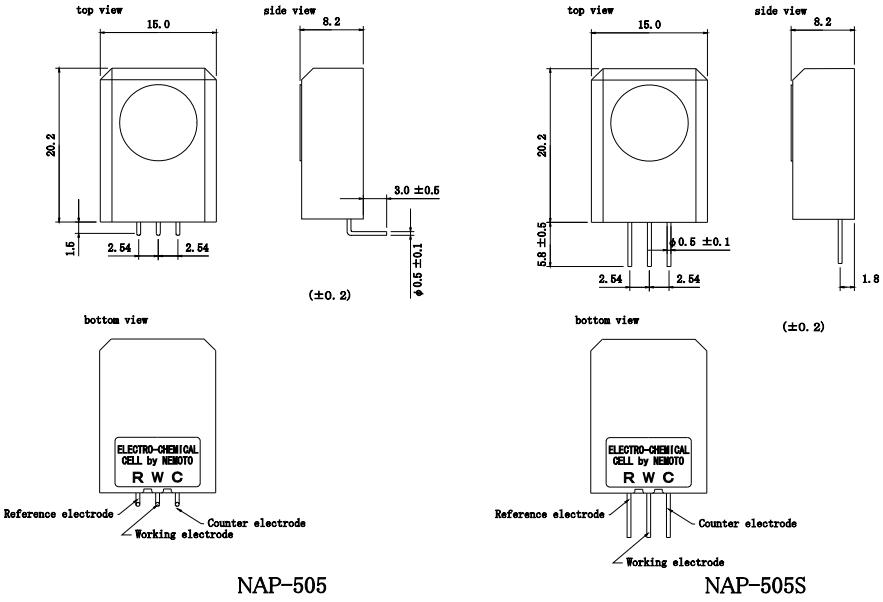


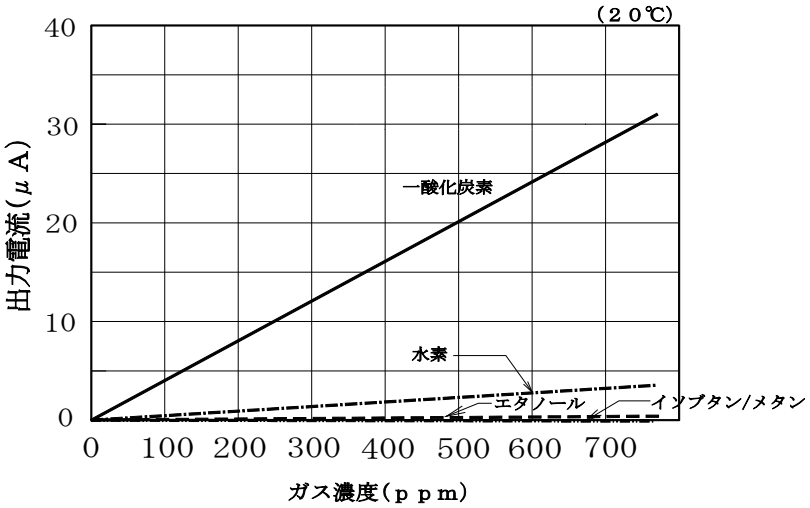


Fig. Gas sensitivity of NAP-503

・Characteristics

| | | | |
|---|---|---|---|
| Detection range | CO 0 ~ 1,000ppm | Zero point drift | <10ppm (-20 ~ 50°C) |
| Output current | 40 ± 10nA/ppmCO | Temp. & humidity | -20 ~ 50°C, 15 ~ 90%RH |
| Repeatability | Less than ± 2% | Span drift | Less than 5%/Year |
| Response time | T90: Within 30 sec. | Life | More than 5 years |

# NAP-505

NAP-505 gas sensor is our standard type of electrochemical CO gas sensor for a CO detector for domestic use. Detection principle is quite the same as conventional one, but quite cheaper than conventional ones due to unique structure and renovated electrodes. NAP-505 has already been approved by UL. (UL2034 – Residential CO detectors) As there are various types of NAP-505 as shown below, please contact us for detailed information.

,

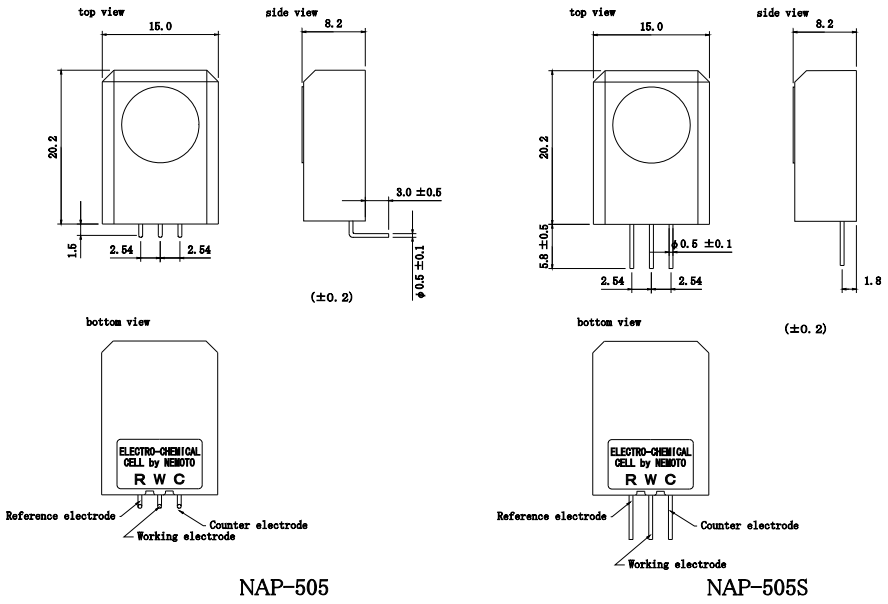


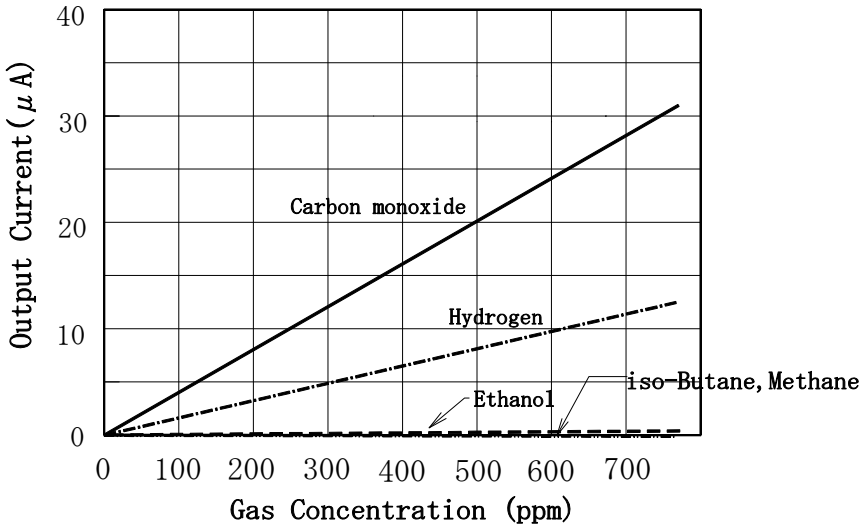


Fig. Gas sensitivity of NAP-505

・Characteristics

| | | | |
|---|---|---|---|
| Detection range | CO 0 ~ 1,000ppm | Zero point drift | Below 10ppm(-20~50°C) |
| Output current | 40 ± 10nA/ppmCO | Temp. and humidity | -20~50°C、15-90%RH |
| Repeatability | Less than ±2% | Span drift | Less than 5%/year |
| Response time | T90：less than 30sec. | Lifetime | Over 5 years |

# NAP-780

NAP-780 is a newly developed oxygen sensor with the principle of detecting voltage that is different from ordinary electric current detection type sensors. Therefore NAP-780 can be operated by a much simplified circuit compared to the ordinary type of sensors. Also as this sensor is hardly affected by $CO_2$ gas, it can be used for measuring oxygen concentrations in breath or monitoring the air in green houses.

・Basic feature and Ratings

| Items | Features |
|---|---|
| Detection range | Oxygen 0 ~ 30% |
| Output voltage | 6.0 ± 1.5mV (in 20°C clean air) |
| Response speed | T90: Less than 15 sec. |
| Maximum exposure concentration | Oxygen 100% |
| Long-term output drift | Less than 2%/month |
| Life | More than 2 years |
| Temperature in operation | -10 ~ +50℃ |
| Humidity in operation | Less than 99%RH |

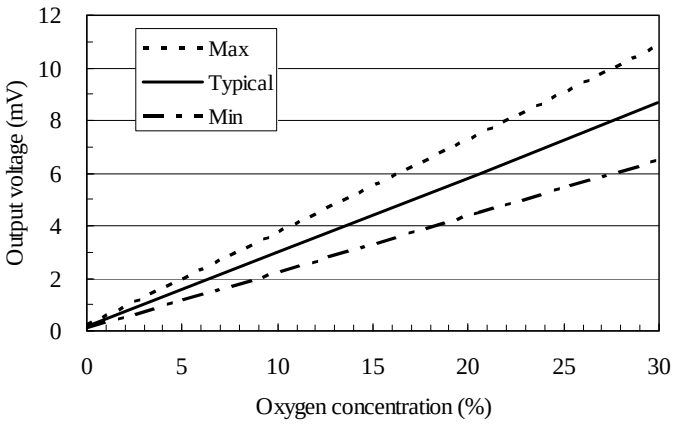


Fig. Oxygen gas concentration characteristics

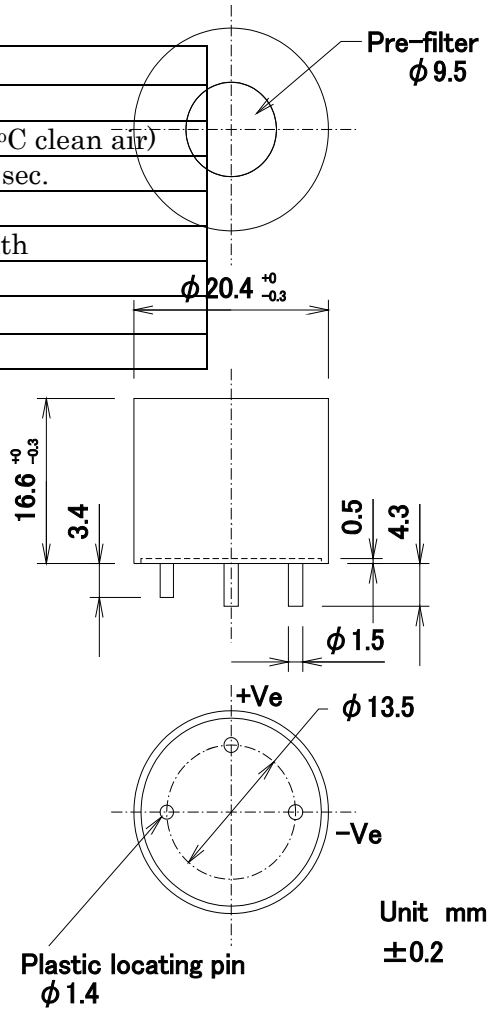


Fig. Appearance of NAP-780

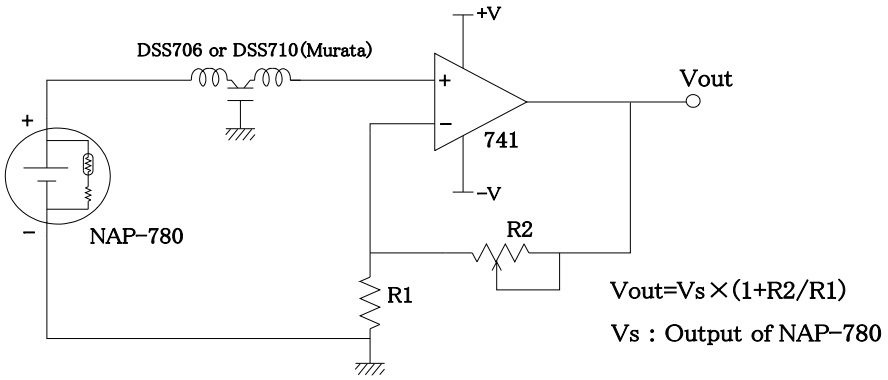


Fig. Basic measuring circuit

# NAP-740

NAP-740 is a formaldehyde sensor and is recommended to use for detecting residues of formaldehyde used for sterilization and disinfection as well as for detecting formaldehyde gas generated from building materials.

・Characteristics

| Items | Characteristics |
|---|---|
| Detection range | HCHO 0 ~ 50ppm |
| Output current | 80 ± 20nA/ppm |
| Repeatability | Less than ± 2% |
| Response time | T90: Less than 30 sec. |
| Zero point drift | Less than 3ppm (-20 ~ 50℃) |
| Ambient Temp. | −20 ~ +50℃ |
| Ambient humidity | 15 ~ 90%RH |

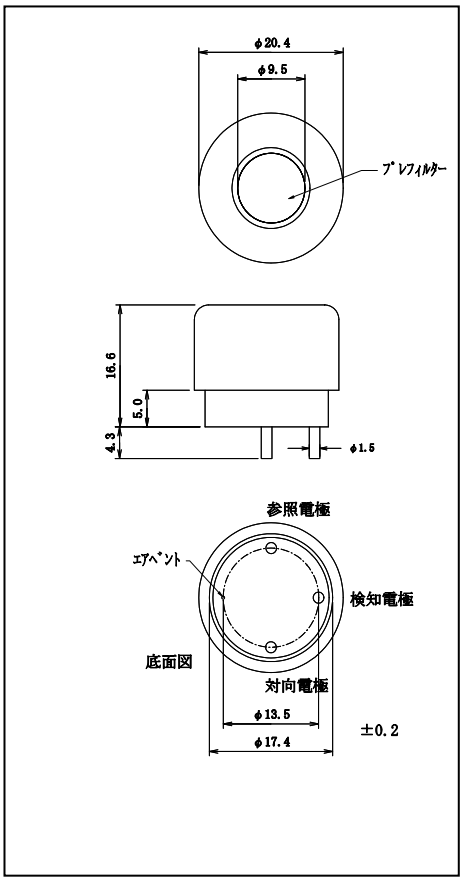


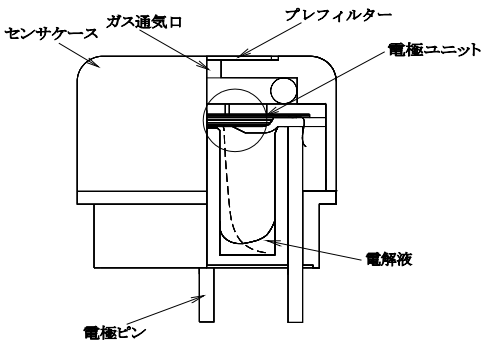


Fig. Structure of NAP-740

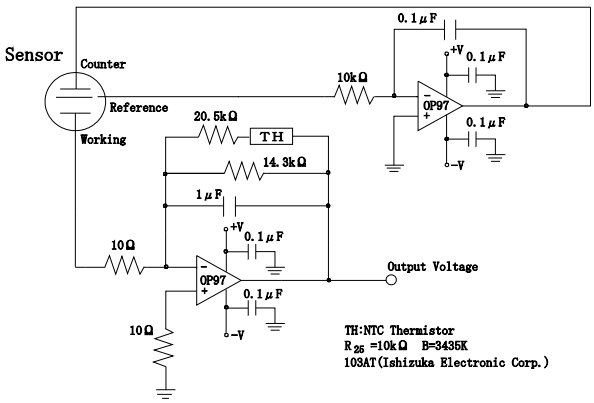


Fig. Recommended circuit

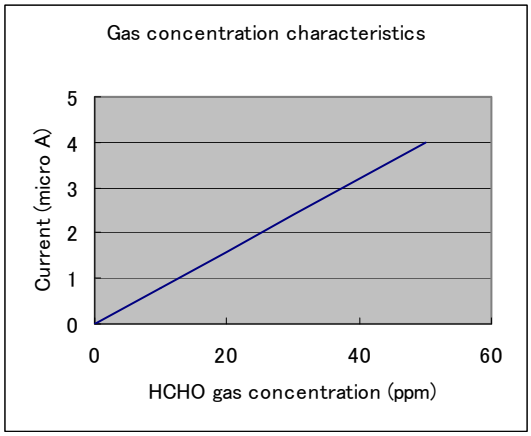

# NHS-12

NHS-12 is a polymer type humidity sensor that keeps high performances for a longer period. This sensor has a unique feature which resistance value does not extremely increase in the lower humidity ranges. It means that very accurate measurement is possible in a wider humidity range. Additionally, just a simple measuring circuit is required because of its smaller temperature dependency and narrower distribution of resistance values.

*Specifications

| | |
|---|---|
| Measuring range | 10 ~ 90% RH |
| Operational temperature range | 0 ~ 60 °C |
| Storage temperature range | -20 ~ 60 °C |
| Measuring accuracy | Less than ± 5% RH |
| Supply voltage | Less than AC 3V (AC 1V is recommended.) |
| Response speed | T90 : less than 60 sec. |
| Frequency | 50 ~ 10,000Hz (1kHz is recommended.) |
| Housing material | ABS resin (Black) |

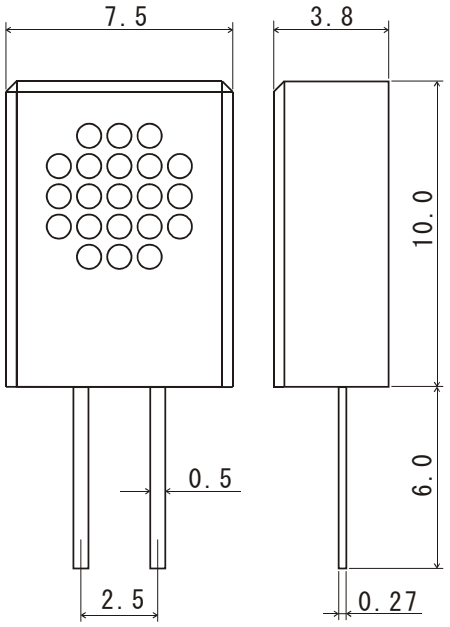


単位 mm

Appearance & dimensions

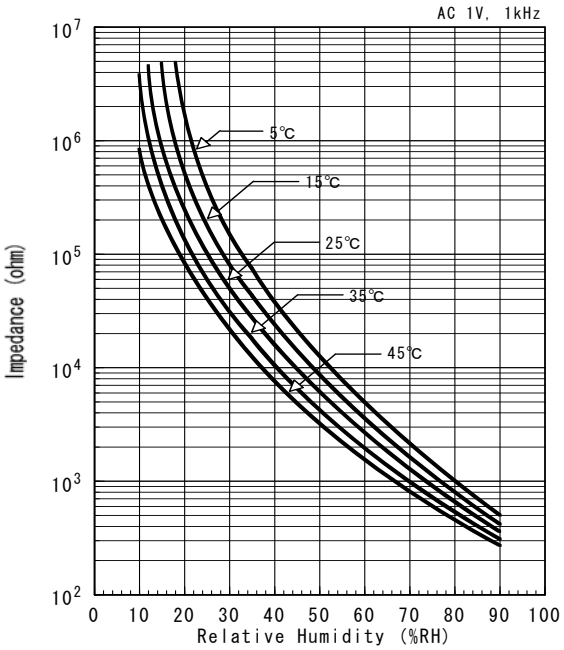


Humidity characteristics

This sensor works with various flexible operational methods without strict restrictions, and has excellent resistivity to low humidity, high temperature/high humidity, and contamination by oil mists or cigarette smokes etc. The most suitable application would be for air conditioners, dehumidifiers, humidifiers, automatic dampers for green houses, etc. It is recommended to use this sensor for detecting or monitoring lower humidity ranges, such as living environment monitors, as the accuracy in higher humidity ranges may be slightly lowered. In addition to the sensor it self, a ready-for-use measuring unit (NHU-12) is also available.
A recommended measuring circuit is available upon request.

# NHS-20

NHS-20 is also a high-performance and long life high polymer type humidity sensor. Since the impedance of NHS-20 is around one digit higher than NHS-12, it shows more accuracy in high humid area than NHS-12. Additionally, just simple measuring circuit is required because of its smaller temperature dependency and narrower distribution of resistance values as same as NHS-12. Appearance and dimensions are the quite same as NHS-12.

*Specifications

| | |
|---|---|
| Measuring range | 20 ~ 95% RH |
| Operational temperature range | 0 ~ 60 °C |
| Storage temperature range | -20 ~ 60 °C |
| Measuring accuracy | Less than ± 5% RH |
| Supply voltage | Less than AC 3V (AC 1V is recommended.) |
| Response speed | T90 : less than 60sec. |
| Frequency | 50 ~ 10,000Hz (1kHz is recommended.) |
| Housing material | ABS resin (Dark blue) |

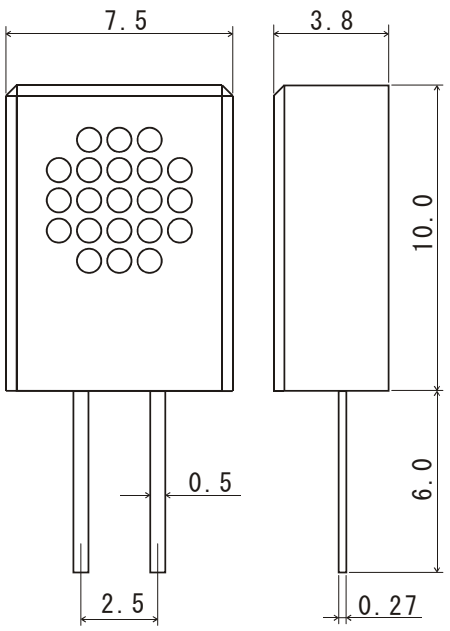


単位 mm

Appearance & dimensions

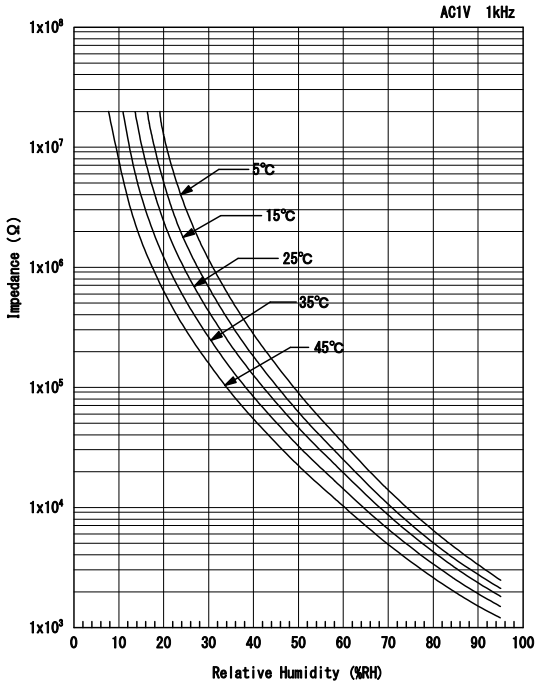


Humidity characteristics

This sensor works with various flexible operational methods without strict restrictions, and has excellent resistivity to low humidity, high temperature/high humidity, and contamination by oil mists or cigarette smokes etc. The most suitable application would be for air conditioners, dehumidifiers, humidifiers, automatic dampers for green houses, etc.
This sensor shows high and constant accuracy from a lower range to higher range of humidity. In addition to the sensor it self, a ready-for-use measuring unit is also available.
A recommended measuring circuit is available upon request.

# NHS-25

NHS-25 is also a high-performance and long life high polymer type humidity sensor. The impedance and humidity characteristics are the same as NHS-20, but NHS-25 is more resistive to dew condensation than NHS-20 because the surface of polymer membrane is treated to be hydrophobic. Then, this sensor keeps the excellent performances even if experienced repeated dew condensations. Additionally, just a simple measuring circuit is required because of its smaller temperature dependence and also narrower distribution of resistance values as same as NHS-12 and NHS-20. Appearance and dimensions are same as NHS-20.

*Specifications

| | |
|---|---|
| Measuring range | 20 ~ 100% RH |
| Operational temperature range | 0 ~ 60 °C |
| Storage temperature range | -20 ~ 60 °C |
| Measuring accuracy | Less than ± 5% RH |
| Supply voltage | Less than AC 3V (AC 1V is recommended.) |
| Response speed | T90 : less than 60 sec. |
| Frequency | 50 ~ 10,000Hz (1kHz is recommended.) |
| Housing material | ABS resin (Light blue) |

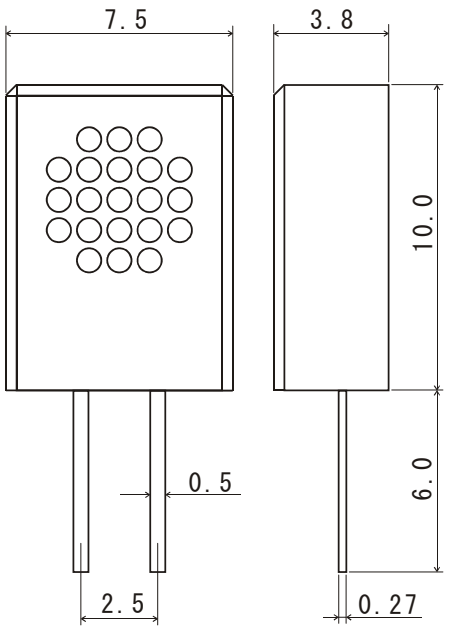


単位 mm

Appearance & dimensions

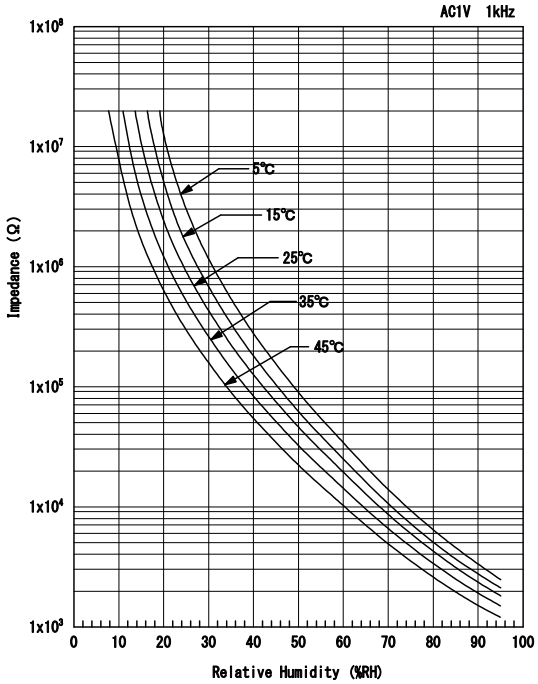


Humidity characteristics

This sensor can be operated with a wide operational condition range, and has excellent durability to low humidity, high temperature and high humidity, and contamination by such as oil mists or cigarette smoke. Adequate application would be for air conditioners, dehumidifiers, humidifiers, automatic dampers for green house, etc. A recommended measuring circuit is available on request. This sensor can be used for dehumidifiers and room drying apparatus. Modules for exclusive applications will be available upon request.

# NIS-09C

NIS-09C is an ionization type smoke sensor containing a tiny amount of $^{241}$Am radioisotope, however, the sensor itself is fully covered by metallic housing so that no radiation leaks outside of the sensor.

* Ratings

| Items | Specifications |
|---|---|
| Supply voltage | Less than DC 7 ~ 12V |
| Current | 27 ± 3pA |
| Radiation source | Americium-241, 33.3KBq |
| Ambient temp. | 0 ~ 50°C |
| Ambient humidity | Less than 95% RH |

* Characteristics

| Items | Specifications |
|---|---|
| Output in clean air | 5.6 ± 0.4V<br>When 9V is supplied. |
| Smoke sensitivity<br>2%/foot Cotton thread | 0.6 ± 0.1V |

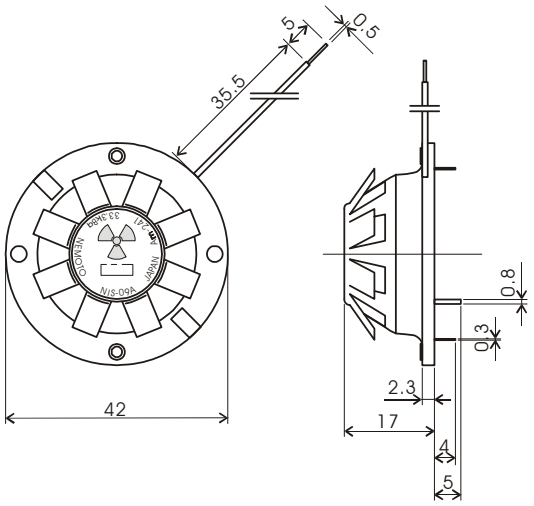


Structure

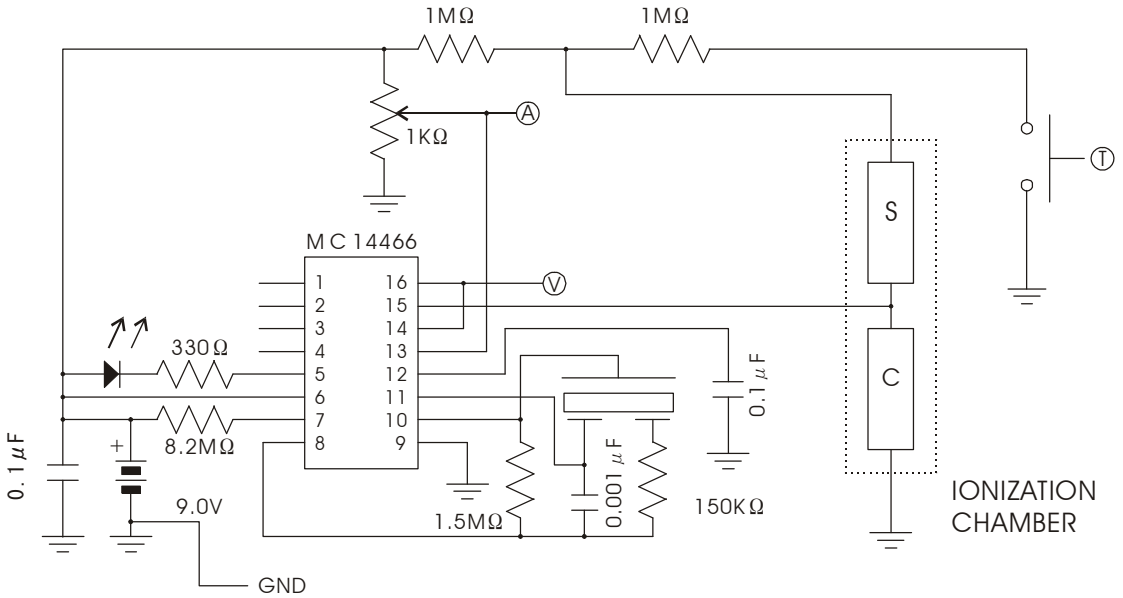


Recommended circuit

Remarks) The IC appeared in the above circuit, MC14466 may not be on the market any more. Compatible ICs will be MC14468, A5367, and A5368 etc.

# NIS-05A

NIS-05A is also an ionization type smoke sensor. The radioisotope $^{241}$Am is used as the radiation source, but the radioactivity is about 55% of NIS-09C and the whole sensor is covered with metallic housing which eliminates the fear of radiation leakage. The pin location and the performances are compatible to sensors produced by other manufacturer than Nemoto.

* Ratings

| Items | Characteristics |
|---|---|
| Supply voltage | Less than DC 6 ~ 12V |
| Supply voltage | 15 ± 3pA |
| Radiation source | Americium-241, 18.5KBq |
| Ambient Temp. | 0 ~ 50°C |
| Ambient humidity | Less than 95%RH |

* Characteristics

| Item | Characteristics |
|---|---|
| Output in clean air | 5.5 ± 0.5V<br>When 9V is supplied. |
| Smoke sensitivity<br>2%/foot Cotton thread | 1.2 ± 0.3V |

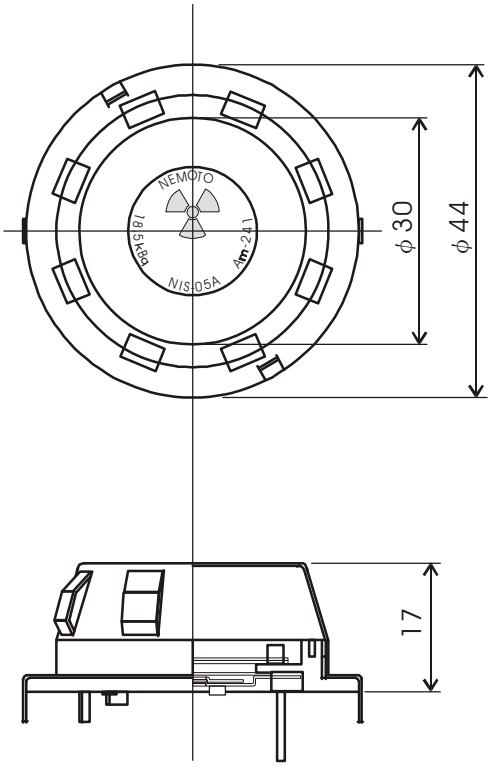


Structure

The recommended circuit is the same as the one for NIS-09C.

# NIS-02A

NIS-02A is the newest version of our ionization smoke chamber containing a radioisotope $^{241}$Am as well. However the radioactivity is less than 10 KBq that is the border line stipulated in BSS (Basic Safety Standard) issued by IAEA (International Atomic Energy Association), therefore this sensor does not need to be treated as a radioactive product. Thus no restriction is applied on its storage, usage, and disposal. This NAP-02A is designed to have complete compatibility with NIS-05A in its dimensions, appearance, and smoke sensitivity for users' easy replacement of the smoke chamber currently used.

・Rating

| Items | Values |
|---|---|
| Supply voltage | Less than DC6 ~ 12V |
| Current | 7 ± 2pA |
| Nuclide | Americium241, 7.4KBq |
| Ambient Temp. | 0 ~ 50°C |
| Ambient humidity | Less than 95% RH |

・Characteristics

| Items | Values |
|---|---|
| Output in clean air | 5.5 ± 0.5V<br>When 9V is supplied. |
| Sensitivity, cotton thread, 2%/foot | 1.1 ± 0.3V |

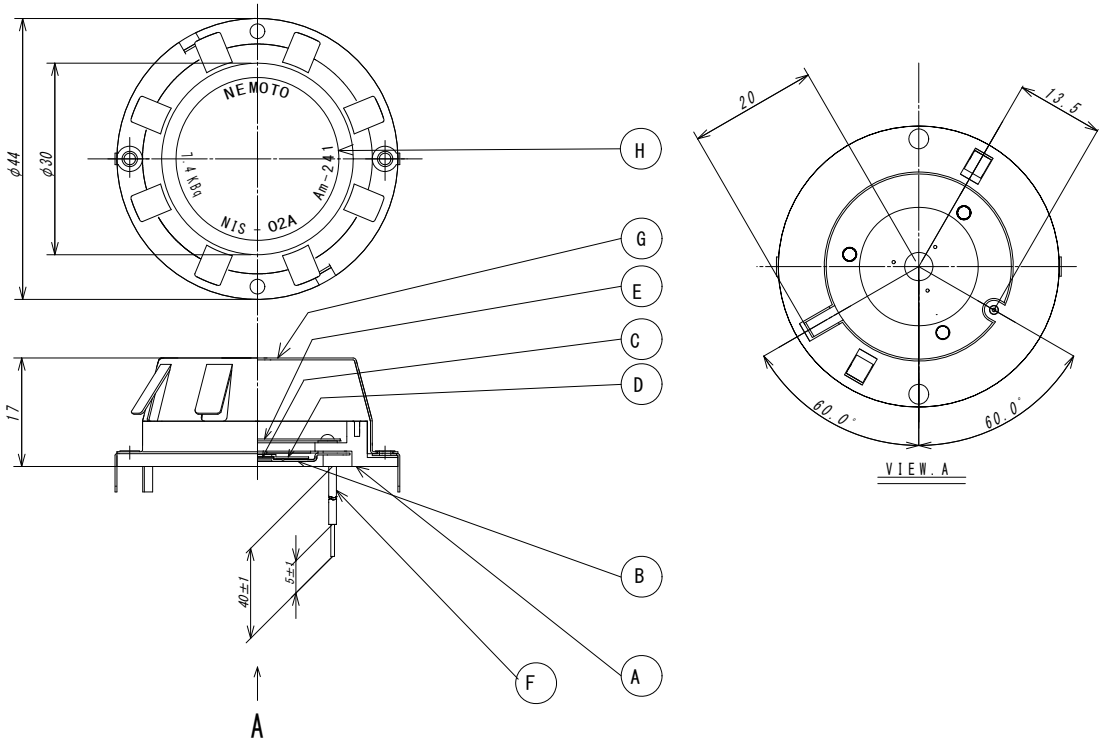


Structure of NIS-02A

# NIS-02C

NIS-02C is the newest version of our ionization smoke chamber containing a radioisotope $^{241}$Am as well. However the radioactivity is less than 10 KBq that is the border line stipulated in BSS (Basic Safety Standard) issued by IAEA (International Atomic Energy Association), therefore this sensor does not need to be treated as a radioactive product. Thus no restriction is applied on its storage, usage, and disposal. This NAP-02C is designed to have complete compatibility with NIS-09C in its dimensions, appearance, and smoke sensitivity for users' easy replacement of the smoke chamber currently used.

・Rating

| Items | Values |
|---|---|
| Supply voltage | Less than DC6 ~ 12V |
| Current | 7 ± 2pA |
| Nuclide | Americium241, 7.4KBq |
| Ambient Temp. | 0 ~ 50°C |
| Ambient humidity | Less than 95% RH |

・Characteristics

| Items | Values |
|---|---|
| Output in clean air | 5.6 ± 0.5V<br>When 9V is supplied. |
| Sensitivity, cotton thread, 2%/foot | 0.7 ± 0.2V |

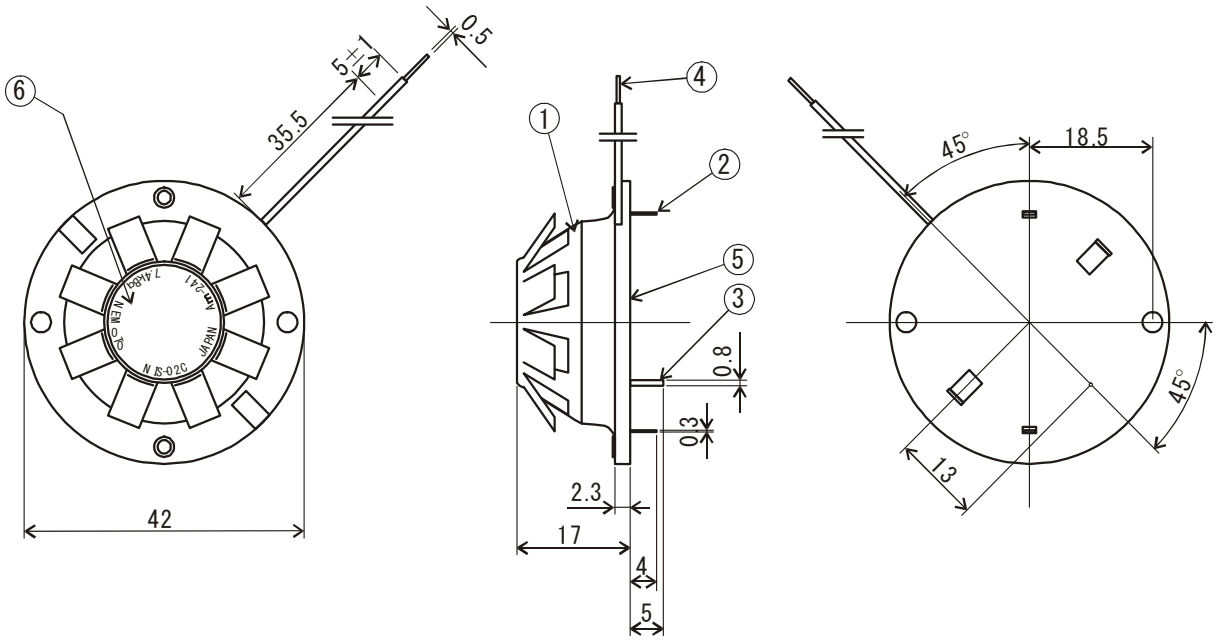


Structure of NIS-02C

SUNSTAR传感与控制 http://www.sensor-ic.com/ TEL:0755-83376549 FAX:0755-83376182 E-MAIL:szss20@163.com

# Nemoto Industrial Gas Sensors

・Catalytic type

・Electrochemical type

〒168-0072　4-10-9, Takaido-higashi, Suginami-ku, Tokyo
Nemoto & Co., Ltd. Sensor Div.

SUNSTAR自动化 http://www.sensor-ic.com/ TEL: 0755-83376489 FAX:0755-83376182 E-MAIL:szss20@163.com

## ●Industrial electrochemical sensor

| Model | | Detected gas | Remarks |
|---|---|---|---|
| 1 | NE-CO | CO | Compatible with 4 series sensor of City Tech. |
| 2 | NE-CO-P | | Flat type, direct soldering |
| 3 | NE-H2S | $H_2S$ | Standard type, 0 – 100ppm, 500nA/ppm |
| 4 | NE-H2S-100 | | 0 – 100ppm, compatible with City's, 700nA/ppm |
| 5 | NE-H2S-200* | | 0 – 200ppm, 500nA/ppm |
| 6 | NE-H2S-500* | | 0 – 500ppm, 200nA/ppm |
| 7 | NE-H2S-P | | Flat type, direct soldering, 500nA/ppm |
| 8 | NE-NH3 | $NH_3$ | Standard type, 0 – 100ppm |
| 9 | NE-NH3-1000* | | 0 – 1,000ppm |
| 10 | NE-NH3-5000* | | 0 – 5,000ppm |
| 11 | NE-NO2 | $NO_2$ | Standard type, 0 – 20ppm |
| 12 | NE-NO2-P | | Flat type, direct soldering |

* : Since basic characteristics are the same as standard type, detailed information of them are not described one by one in this general information.

## ●Industrial pellistor

| Model | | Detected gas | Remarks |
|---|---|---|---|
| 1 | NC-170 | General combustible gases | 2.0V – 170mA, matched pair type |
| 2 | NC-170S | | 2.0V – 170mA, single header type |
| 3 | NC-300 | | 2.0V – 300mA, matched pair type |
| 4 | NC-300S | | 2.0V – 300mA, single header type |
| 5 | NC-180 | | 2.6V – 170mA, matched pair type |
| 6 | NC-180S | | 2.6V – 170mA, single header type |
| 7 | NC-180S-H | Hydrogen | 1.6V – 140mA, single header type |
| 8 | NC-180S-N | Ammonia | 2.2V – 150mA, single header type |
| 9 | NC-180-H | Hydrogen | 1.6V – 140mA, matched pair type |
| 10 | NC-180-A | Acetylene | 2.0V – 170mA, matched pair type |
| 11 | NC-180-N | Ammonia | 2.2V – 150mA, matched pair type |
| 12 | NC-50S | General combustible gases | 4.25V – 50mA, single header type |
| 13 | NC-70S | | 3.0V – 75mA, single header type |

# NE-CO

NE-CO gas sensor is an industrial type CO gas sensor, and since its signal is larger than domestic type, minimum detection level is lower than domestic type, additionally it is superior on selectivity and resistivity to residential type. And then, since gas response speed is fairly fast, it is in compliance with most of world-widely industrial standards, and it is also applicable for wider fields.

- Characteristics

| Items | Characteristics |
|---|---|
| Detected gas conc. | CO 0～2000ppm |
| Output current | 70±15nA／ppm of CO |
| Repeatability | Less than ±2% |
| Response time | T90：less than 30sec. |
| Zero offset drift | Less than 10ppm(-20－50℃) |
| Temperature | －20～＋50℃ |
| Humidity | 15～90%RH |

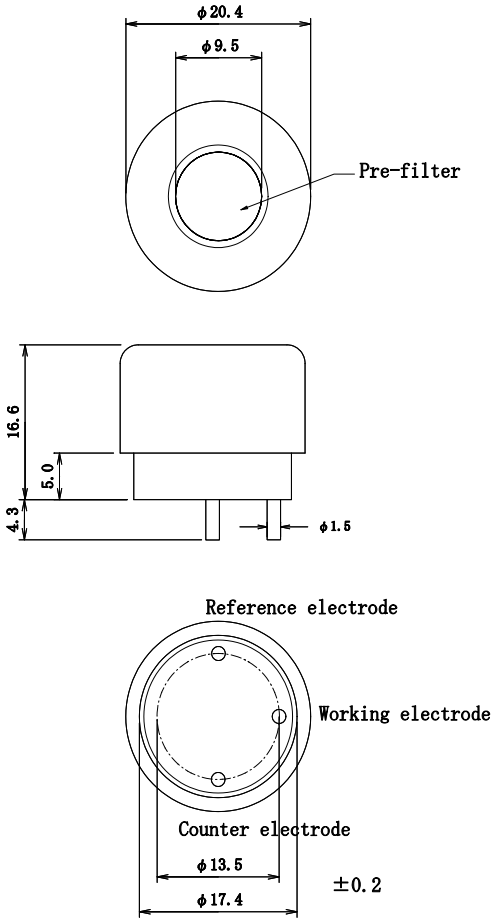


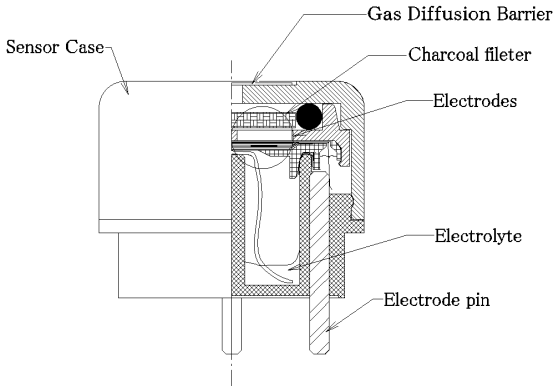


Fig. Shape and dimension

Fig. Structure of NE-CO

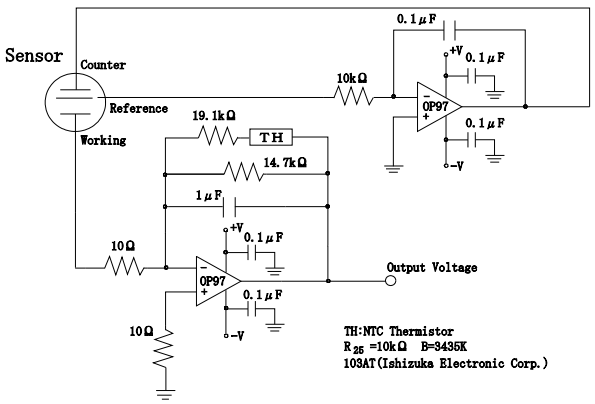


Fig. Recommended circuit diagram

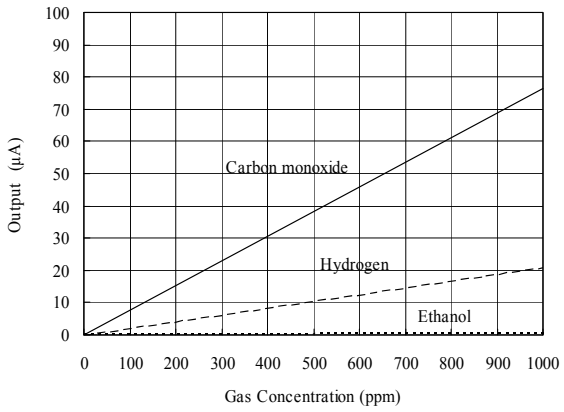


Fig. Gas sensitivity characteristics

( Body color：Light green )

# NE-CO-P

NE-CO-P is an industrial CO gas sensor like NE-CO, since the shape is flat as the same as domestic NAP-505, and it can be directly soldered on the PCB. However the various resistivity and features are almost the same as NE-CO. It is also in compliance with world-wide standards, and available for a lot of applications.

・Characteristics and ratings

| Items | Characteristics, ratings |
|---|---|
| Detected gas conc. | CO　0～1000ppm |
| Output current | 40±10nA／ppm of CO |
| Repeatability | Less than ±2% |
| Response time | T90：less than 30sec. |
| Zero offset drift | Less than 10ppm(-20－50℃) |
| Temperature | －20～＋50℃ |
| Humidity | 15～90%RH |
| Pressure range | 0.9 – 1.1atm |
| Guaranteed life time | 2 years |
| Storage conditions | 0 – 20℃ is recommended |
| Zero offset drift | Less than 5ppm |

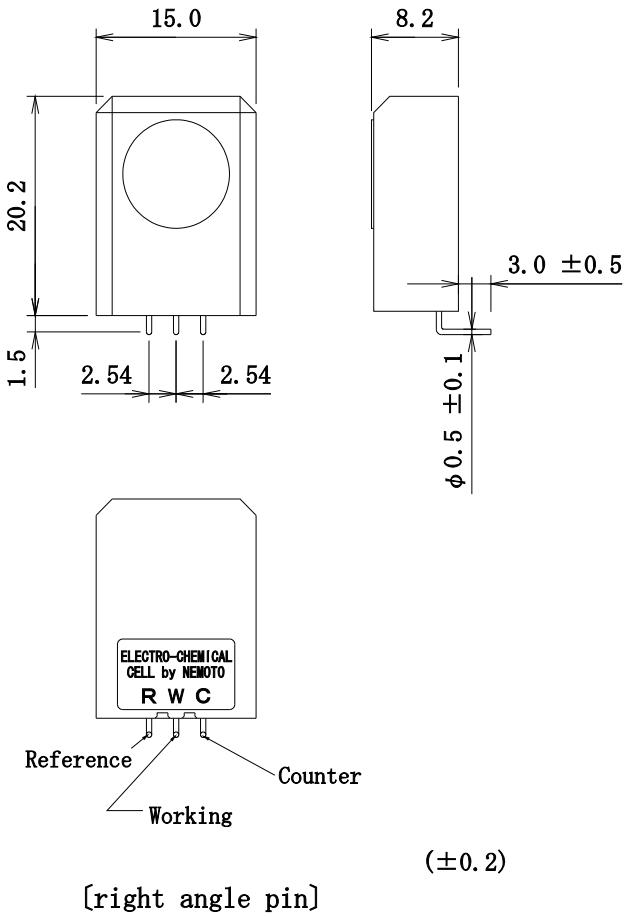


・Typical application

Wearable, handheld or portable CO gas alarm

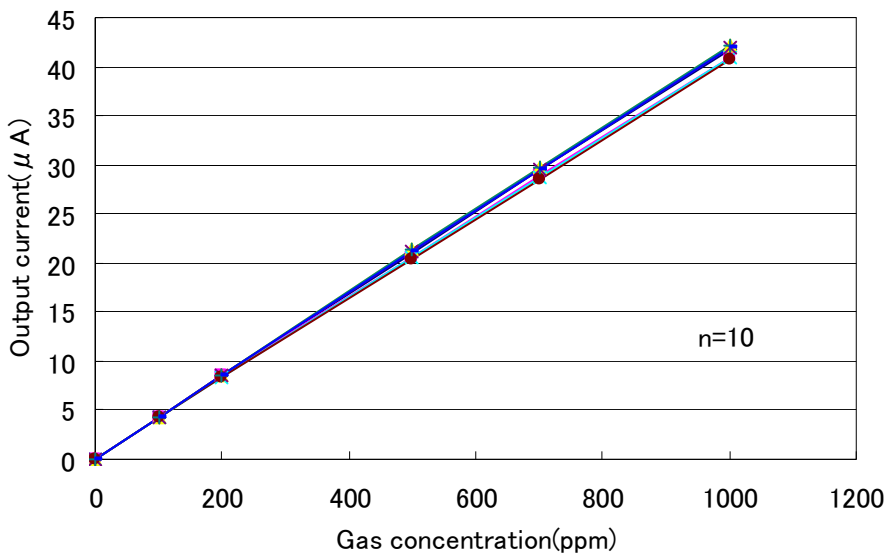


Fig. Gas concentration characteristics

( Body color：Light green )

# NE-H2S

NE-H2S is a hydrogen sulfide gas sensor for industrial applications, and 3 types except standard type (H2S-100, H2S-200 and H2S-500) are also available as described in the next page. The most suitable type can be easily selected according to the applications. Output current is fairly large, it means that it can detect fairly low concentration of hydrogen sulfide, and additionally, since it has excellent selectivity, resistivity and responsibility, it is applicable in wide applications.

・Characteristics

| Items | Features |
|---|---|
| Detected gas conc. | $H_2S$ 0～100ppm |
| Output current | 500±100nA/ppm of H2S |
| Repeatability | Less than ±2% |
| Response time | T90：less than 30sec. |
| Zero offset drift | Less than 1ppm(-20－50℃) |
| Temperature | －20～＋50℃ |
| Humidity | 15～90%RH |

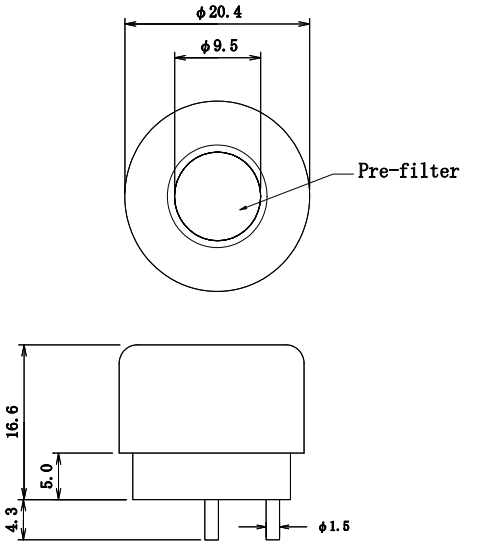


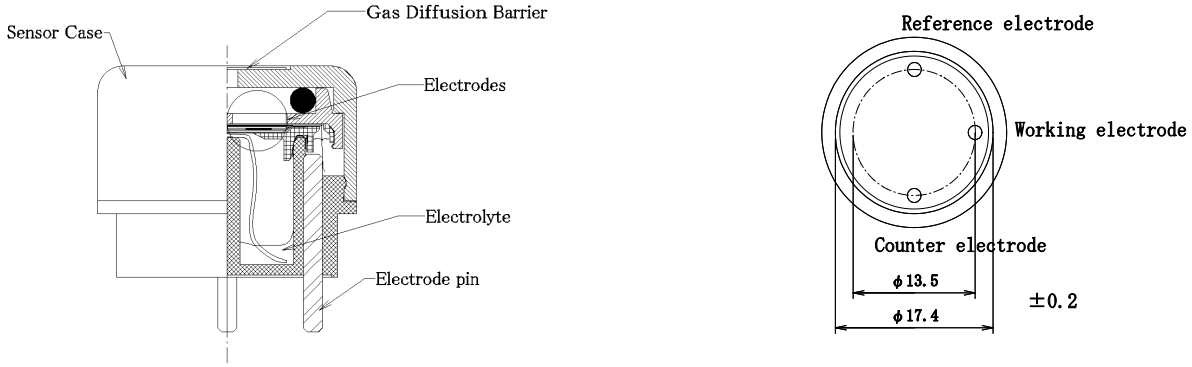


Fig. Structure of NE-H2S

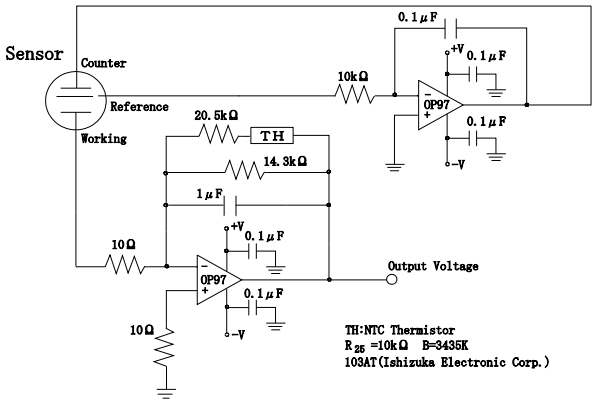


Fig. Structure of NE-H2S

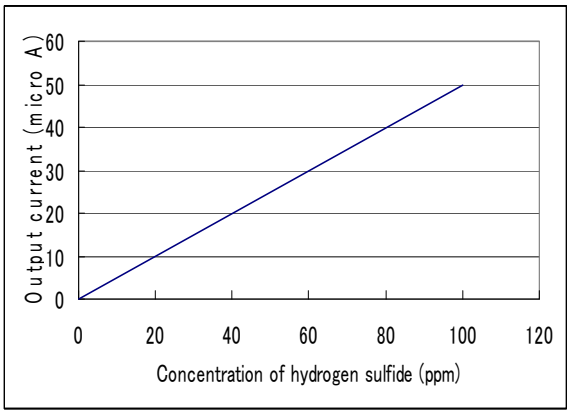


Fig. Gas sensitivity characteristics of NE-H2S

( Body color：Yellow )

# NE-H2S-100, 200, 500

Structure, shape, and body color of them are completely the same as NE-H2S standard type, then sensitivity characteristics of them are shown as below.

・NE-H2S-100

| Items | Features |
|---|---|
| Detected gas concentration | $H_2S$ 0～100ppm |
| Output current | 700±150nA/ppm |
| Repeatability | Less than ±2% |
| Response time | T90：less than 30sec. |
| Zero offset drift | Less than 1ppm(-20－50℃) |
| Temperature | －20～＋50℃ |
| Humidity | 15～90%RH |

・NE-H2S-200

| Items | Features |
|---|---|
| Detected gas concentration | $H_2S$ 0～200ppm |
| Output current | 500±100nA/ppm |
| Repeatability | Less than ±2% |
| Response time | T90：less than 30sec. |
| Zero offset drift | Less than 1ppm(-20－50℃) |
| Temperature | －20～＋50℃ |
| Humidity | 15～90%RH |

・NE-H2S-500

| Items | Features |
|---|---|
| Detected gas concentration | $H_2S$ 0～500ppm |
| Output current | 200±50nA/ppm of H2S |
| Repeatability | Less than ±2% |
| Response time | T90：less than 20sec. |
| Zero offset drift | Less than 3ppm(-20－50℃) |
| Temperature | －20～＋50℃ |
| Humidity | 15～90%RH |

# NE-H2S-P

NE-H2S-P is an industrial H2S gas sensor like NE-H2S, since the shape is flat as the same as domestic NAP-505, it can be directly soldered on PCB. However the various resistivity and features are almost the same as NE-H2S. It is also in compliance with world-wide standards, and available for a lot of applications.

・Characteristics and ratings

| Items | Characteristics, ratings |
|---|---|
| Detected gas conc. | H2S　0～100ppm |
| Output current | 120±20nA／ppm of H2S |
| Repeatability | Less than ±2% |
| Response time | T90：less than 20sec. |
| Zero offset drift | Less than 2ppm(-20－50℃) |
| Temperature | －20～＋50℃ |
| Humidity | 15～90%RH |
| Pressure range | 0.9 – 1.1atm |
| Guaranteed life time | 2 years |
| Storage conditions | 0 – 20℃ is recommended |
| Zero offset drift | Less than 1ppm |

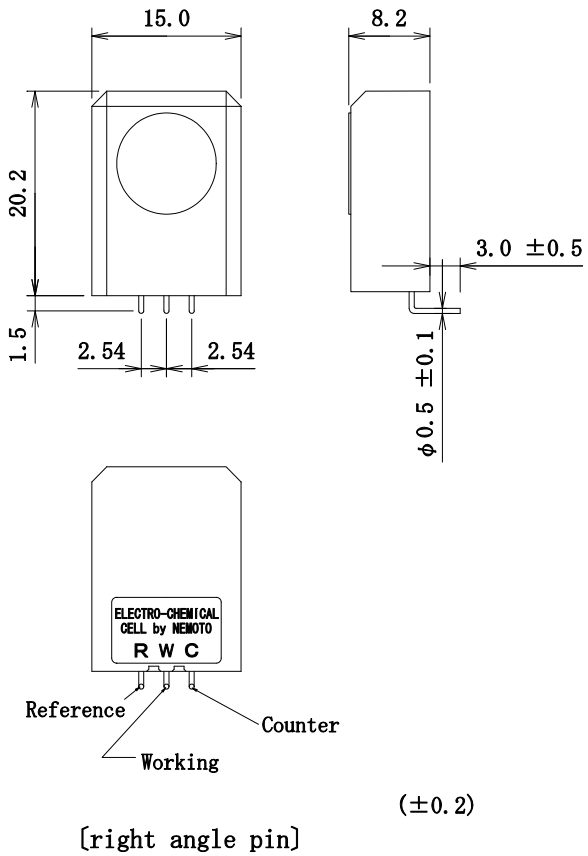


・Typical application

Wearable, Handheld or portable H2S gas alarm

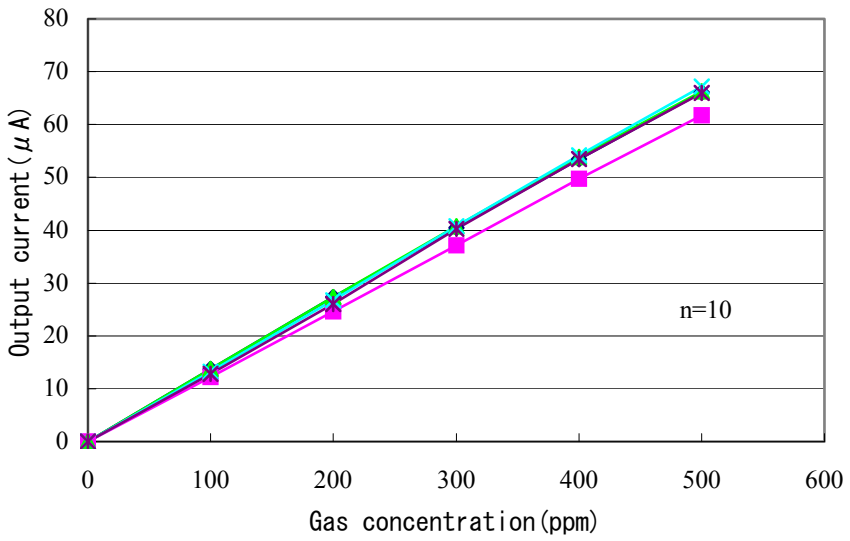


Fig. Gas concentration characteristics

**( Body color：Yellow )**

# NE-NH3

NE-NH3 is a newly developed ammonia gas sensor for industrial application. 2 more types except standard are also available for higher concentration in the next page. It is very stable in normal circumstance for more than 6 months, and can detect ammonia with excellent accuracy without reduction of sensitivity. Additionally, since it is applicable in exceedingly low temperature, it is available for many applications.

・Characteristics

| Items | Features |
|---|---|
| Detected gas conc. | $NH_3$ 0～100ppm |
| Output current | 40±12nA／ppm |
| Repeatability | Less than ±10% |
| Response speed | T90：less than 90sec. |
| Zero offset drift | Less than 15ppm(-30－50℃) |
| Temperature | －40～＋50℃ |
| Humidity | 15～90%RH |

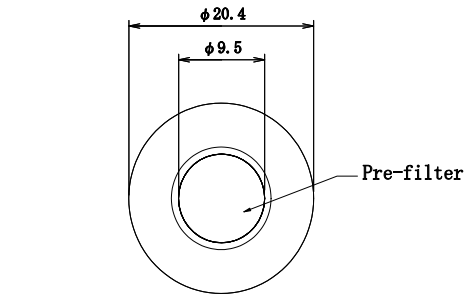


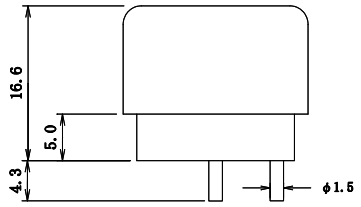


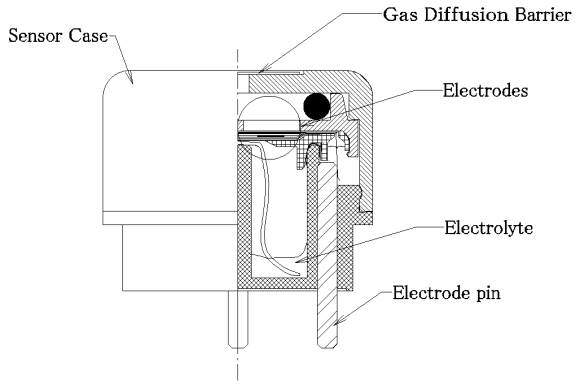


Fig. Structure of NE-NH3

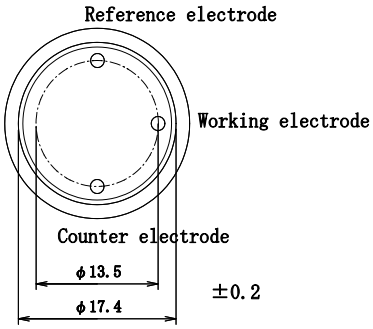


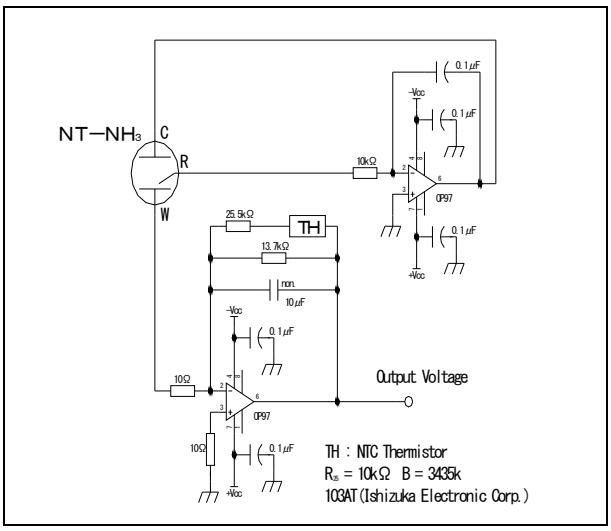


Fig. Recommended circuit diagram

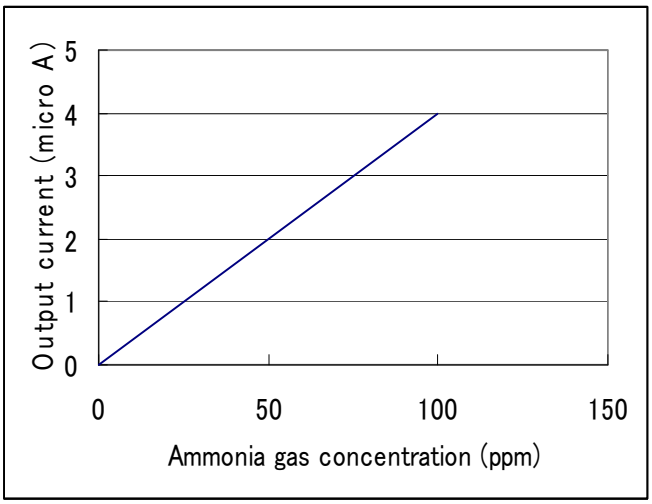


Fig. Gas concentration characteristics

( Body color : Violet )

# NE-NH3-1000, 5000

Structure, shape, and body color of them are completely the same as NE-NH3 standard type, then sensitivity characteristics of them are shown as below.

・NE-NH3-1000

| Items | Features |
|---|---|
| Detected gas concentration | $NH_3$ 0～1,000ppm |
| Output current | 8±4nA／ppm |
| Repeatability | Less than ±10% |
| Response speed | T90：less than 120sec. |
| Zero offset drift | Less than 75ppm(-30－50℃) |
| Temperature | －40～＋50℃ |
| Humidity | 15～90%RH |

・NE-NH3-5000

| Items | Features |
|---|---|
| Detected gas concentration | $NH_3$ 0～5,000ppm |
| Output current | 4±2nA／ppm |
| Repeatability | Less than ±10% |
| Response speed | T90：less than 150sec. |
| Zero offset drift | Less than 150ppm(-30－50℃) |
| Temperature | －40～＋50℃ |
| Humidity | 15～90%RH |

# NT-NO2

NE-NO2 is a newly developed NO2 gas sensor. Since the output current is fairly large, it can detect the low concentration of NO2 with good accuracy. Additionally, as it has very excellent repeatability, long term stability, selectivity and resistivity, it is useful in many applications.

・Characteristics

| Items | Features |
|---|---|
| Detected gas conc. | $NO_2$ 0～20ppm |
| Output current | 600±150nA／ppm<br>(Contrary signal to other models) |
| Repeatability | Less than ±2% |
| Response time | T90：less than 25sec. |
| Zero offset drift | Less than 0.2ppm(-20－50℃) |
| Temperature | －20～＋50℃ |
| Humidity | 15～90%RH |

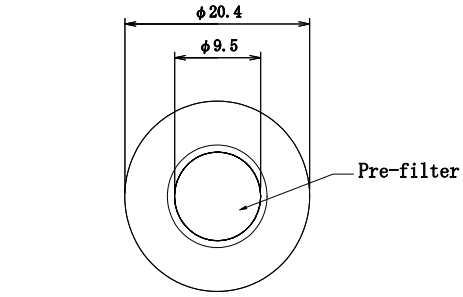


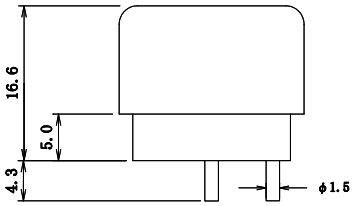


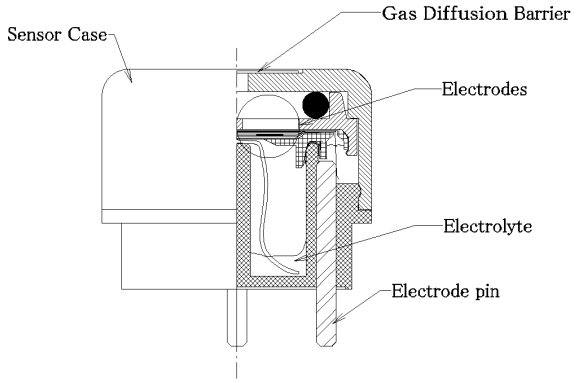


Fig. Structure of NE-NO2

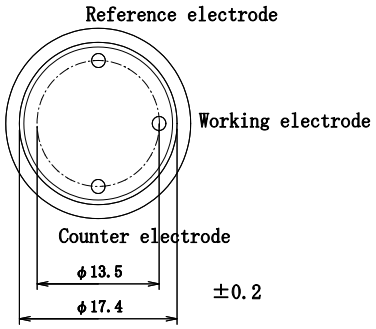


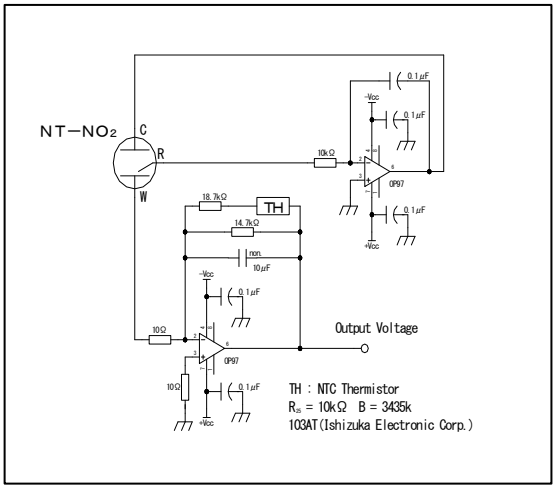


Fig. Recommended circuit diagram

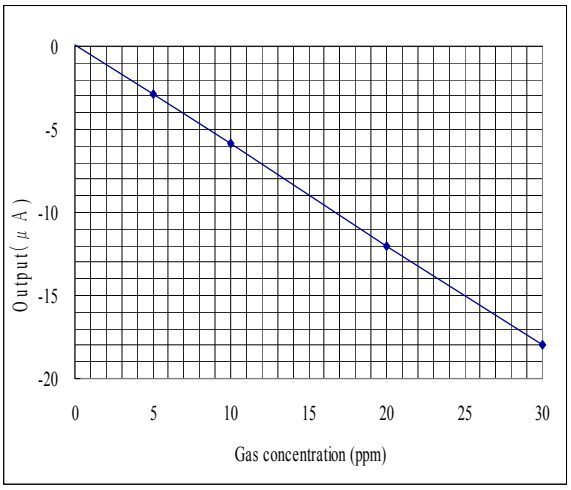


Fig. Gas concentration characteristics

**( Body color : Pink )**

# NE-NO2-P

NE-NO2-P is an industrial NO2 gas sensor like NE-NO2, since the shape is flat as the same as domestic NAP-505, it can be directly soldered on PCB. However the various resistivity and features are almost the same as NE-NO2. It is also in compliance with world-wide standards, and available for a lot of applications.

・Characteristics and ratings

| Items | Characteristics, ratings |
|---|---|
| Detected gas conc. | NO2　0～20ppm |
| Output current | 150±30nA／ppm of NO2 |
| Repeatability | Less than ±2% |
| Response time | T90：less than 25sec. |
| Zero offset drift | Less than 0.5ppm (-20－50℃) |
| Temperature | －20～＋50℃ |
| Humidity | 15～90%RH |
| Pressure range | 0.9 – 1.1atm |
| Guaranteed life time | 2 years |
| Storage conditions | 0 – 20℃ is recommended |
| Zero offset drift | Less than 0.5ppm |

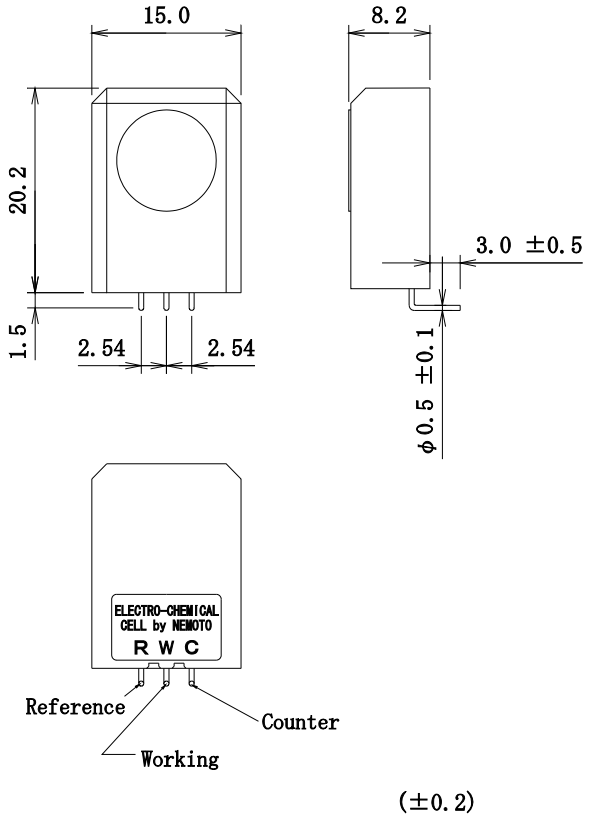


Notice)
Output signal is generated to contrary side to other models.

・Typical application
Wearable, handheld or portable NO2 gas alarm

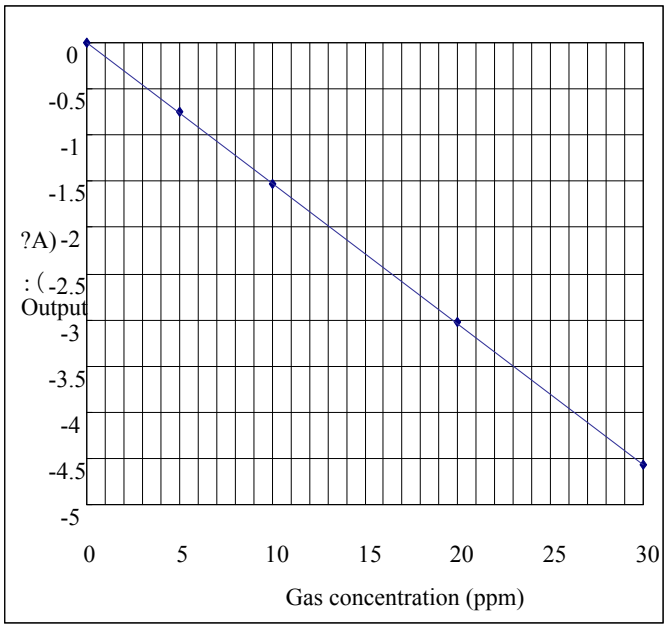


Fig. Gas concentration characteristics

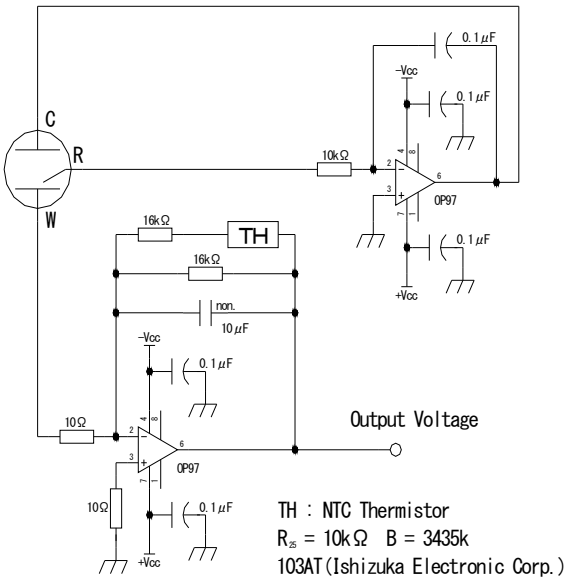


Fig. Recommended circuit diagram

( Body color : Pink )

# NC-170

NC-170 gas sensor is a matched pair type for industrial use, and it has been already available in many customers for fixed applications. Since this type does not meet the structure of explosion proof by itself, it has to be installed in the approved body by ATEX, CSA or etc.

## ●Ratings, dimensions, shape

- Supply voltage 2.0V
- Current 170 – 190mV (When 2.0V is supplied.)
- Temperature -20 - +60℃
- Humidity Less than 95%RH (Without dew condensation)
- Measurement range Less than 100%LEL
- Shape As per the right figure
- Dimensions As per right figure Pin length is shortened to 25mm now, and O-ring is attached on both.

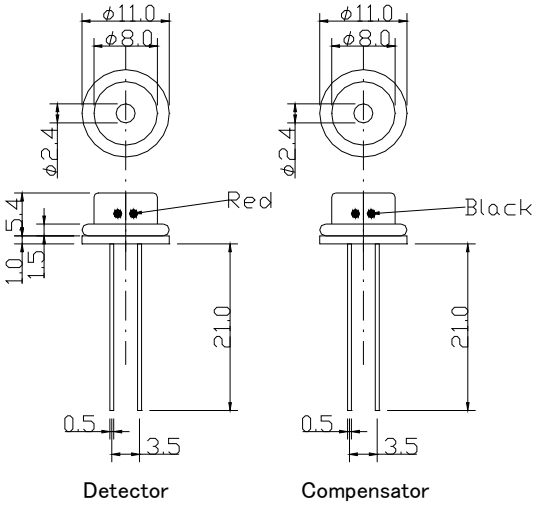


## ●Standard sensitivity and zero offset in air

13 – 18mV/10%LEL of methane, -25 to +25mV in zero offset in air

## ●Relative sensitivity

| Gases | | LEL | R. S. | Gases | | LEL | R. S. |
|---|---|---|---|---|---|---|---|
| 1 | **Methane** | **5.00%** | **100** | 11 | Acetylene | 2.50 | - |
| 2 | Propane | 2.20 | 90 | 12 | CO | 12.50 | 115 |
| 3 | n-Butane | 1.80 | 80 | 13 | Acetone | 2.60 | 75 |
| 4 | n-Pentane | 1.40 | 80 | 14 | MEK | 1.90 | 55 |
| 5 | n-Hexane | 1.20 | 80 | 15 | Toluene | 1.20 | 60 |
| 6 | n-Heptane | 1.05 | 65 | 16 | Ethyl acetate | 2.20 | 75 |
| 7 | n-Octane | 0.95 | 60 | 17 | Hydrogen | 4.00 | 130 |
| 8 | Methanol | 6.70 | 125 | 18 | Ammonia | 15.00 | 140 |
| 9 | Ethanol | 3.30 | 85 | 19 | Gasoline Pb free | 1.20 | 80 |
| 10 | IPA | 2.20 | 75 | 20 | Ethylene | 2.70 | 95 |

* : 「-」 means that it is not a detected gas.

** : R.S. (relative sensitivity) is described in case that sensitivity to **methane** is 100.

# NC-300

NC-300 gas sensor is a matched pair type for industrial use like NC-170, and it has been already available in many customers for fixed applications. Since this type does not meet the structure of explosion proof by itself, it has to be installed in the approved body by ATEX, CSA or etc.

## ●Ratings, shape, dimensions

- Supply voltage 2.0V
- Current 280 – 300mV
  (When 2.0V is supplied.)
- Temperature -20 - +60℃
- Humidity Less than 95%RH
  (Without dew condensation)
- Measurement range
  Less than 100%LEL
- Shape As per the right figure
- Dimensions As per the right figure
  Pin length is shortened to 25mm now, and O-ring is attached on both.

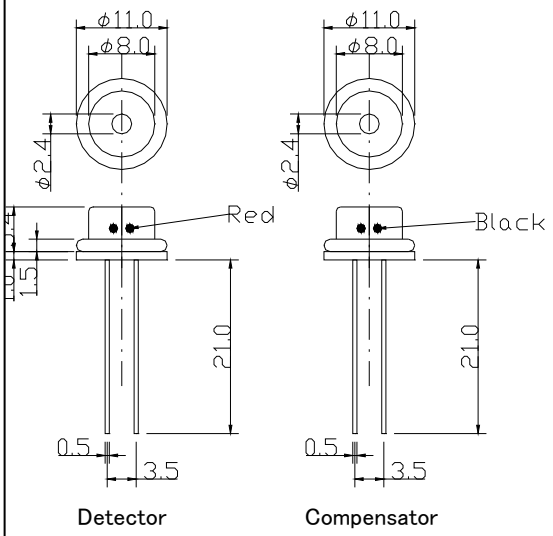


## ●Standard sensitivity and zero offset in air

11 – 16mV/10%LEL of methane, -30 to +30mV in zero offset in air

## ●Relative sensitivity

| Gases | | LEL | R.S. | Gases | | LEL | R.S. |
|---|---|---|---|---|---|---|---|
| 1 | **Methane** | **5.00%** | **100** | 11 | Acetylene | 2.50 | - |
| 2 | Propane | 2.20 | 75 | 12 | CO | 12.50 | 110 |
| 3 | n-Butane | 1.80 | 70 | 13 | Acetone | 2.60 | 60 |
| 4 | n-Pentane | 1.40 | 70 | 14 | MEK | 1.90 | 45 |
| 5 | n-Hexane | 1.20 | 65 | 15 | Toluene | 1.20 | 60 |
| 6 | n-Heptane | 1.05 | 55 | 16 | Ethyl acetate | 2.20 | 60 |
| 7 | n-Octane | 0.95 | 50 | 17 | Hydrogen | 4.00 | 110 |
| 8 | Methanol | 6.70 | 100 | 18 | Ammonia | 15.00 | 130 |
| 9 | Ethanol | 3.30 | 70 | 19 | Gasoline Pb free | 1.20 | 65 |
| 10 | IPA | 2.20 | 60 | 20 | Ethylene | 2.70 | 85 |

* : 「-」 means that it is not a detected gas.

** : R.S. (relative sensitivity) is described in case that sensitivity to **methane** is 100.

# NC-170S

NC-170S gas sensor is a single header type for industrial use, and it has been already available in many customers for fixed applications. This type has a simplified explosion proof structure, however it is recommended that it is installed in the approved body by ATEX, CSA or etc.

## ●Ratings, shape, dimensions

- Supply voltage 2.0V
- Current 170 – 190mV
  (When 2.0V is supplied.)
- Temperature -20 - +60℃
- Humidity Less than 95%RH
  (Without dew condensation)
- Measurement range
  Less than 100%LEL
- Shape As per the right figure
- Dimensions As per the right figure

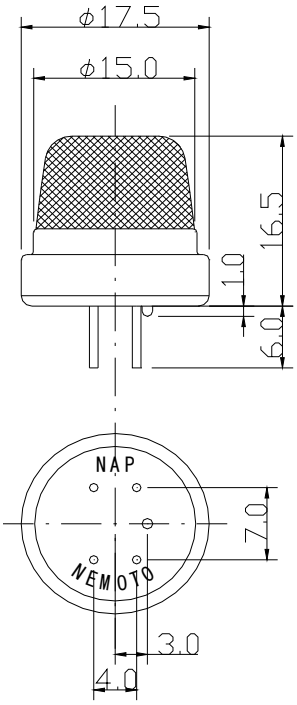


## ●Standard sensitivity and zero offset in air

27– 37mV/10%LEL of methane, -30 to +30mV in zero offset in air

## ●Relative sensitivity

| Gases | | LEL | R.S. | Gases | | LEL | R.S. |
|---|---|---|---|---|---|---|---|
| **1** | **Methane** | **5.00%** | **100** | 11 | Acetylene | 2.50 | - |
| 2 | Propane | 2.20 | 90 | 12 | CO | 12.50 | 115 |
| 3 | n-Butane | 1.80 | 80 | 13 | Acetone | 2.60 | 75 |
| 4 | n-Pentane | 1.40 | 80 | 14 | MEK | 1.90 | 55 |
| 5 | n-Hexane | 1.20 | 80 | 15 | Toluene | 1.20 | 60 |
| 6 | n-Heptane | 1.05 | 65 | 16 | Ethyl acetate | 2.20 | 75 |
| 7 | n-Octane | 0.95 | 60 | 17 | Hydrogen | 4.00 | 130 |
| 8 | Methanol | 6.70 | 125 | 18 | Ammonia | 15.00 | 140 |
| 9 | Ethanol | 3.30 | 85 | 19 | Gasoline Pb free | 1.20 | 80 |
| 10 | IPA | 2.20 | 75 | 20 | Ethylene | 2.70 | 95 |

* : 「-」 means that it is not a detected gas.

** : R.S. (relative sensitivity) is described in case that sensitivity to **methane** is 100.

# NC-300S

NC-300S gas sensor is a single header type for industrial use like NC-170S, and it has been already available in many customers for fixed applications. This type has a simplified explosion proof structure, however it is recommended that it is installed in the approved body by ATEX, CSA or etc.

## ●Ratings, shape, dimensions

- Supply voltage 2.0V
- Current 280 – 300mV
  (When 2.0V is supplied.)
- Temperature -20 - +60℃
- Humidity Less than 95%RH
  (Without dew condensation)
- Measurement range
  Less than 100%LEL
- Shape As per the right figure
- Dimensions As per the right figure

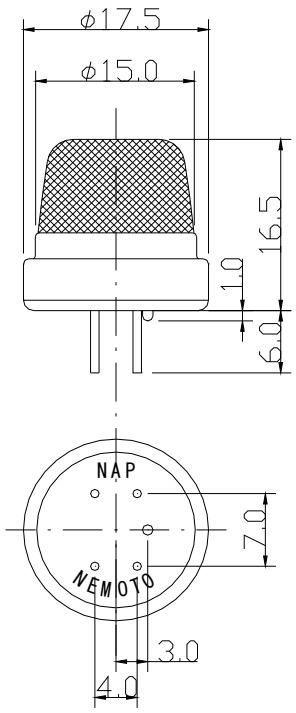


## ●Standard sensitivity and zero offset in air

23– 33mV/10%LEL of methane, -30 to +30mV in zero offset in air

## ●Relative sensitivity

| Gases | | LEL | R.S. | Gases | | LEL | R.S. |
|---|---|---|---|---|---|---|---|
| **1** | **Methane** | **5.00%** | **100** | 11 | Acetylene | 2.50 | - |
| 2 | Propane | 2.20 | 75 | 12 | CO | 12.50 | 110 |
| 3 | n-Butane | 1.80 | 70 | 13 | Acetone | 2.60 | 60 |
| 4 | n-Pentane | 1.40 | 70 | 14 | MEK | 1.90 | 45 |
| 5 | n-Hexane | 1.20 | 65 | 15 | Toluene | 1.20 | 60 |
| 6 | n-Heptane | 1.05 | 55 | 16 | Ethyl acetate | 2.20 | 60 |
| 7 | n-Octane | 0.95 | 50 | 17 | Hydrogen | 4.00 | 110 |
| 8 | Methanol | 6.70 | 100 | 18 | Ammonia | 15.00 | 130 |
| 9 | Ethanol | 3.30 | 70 | 19 | Gasoline Pb free | 1.20 | 65 |
| 10 | IPA | 2.20 | 60 | 20 | Ethylene | 2.70 | 85 |

* : 「-」 means that it is not a detected gas.

** : R.S. (relative sensitivity) is described in case that sensitivity to **methane** is 100.

# NC-180

NC-180 gas sensor is a matched pair type for industrial use, and it has been already available also in many customers for fixed applications. Since this type does not meet the structure of explosion proof by itself, it has to be installed in the approved body by ATEX, CSA or etc.

## ●Ratings, dimensions, shape

- Supply voltage 2.6V
- Current 170 – 190mV (When 2.6V is supplied.)
- Temperature -20 - +60℃
- Humidity Less than 95%RH (Without dew condensation)
- Measurement range Less than 100%LEL
- Shape As per the right figure
- Dimensions As per the right figure Pin length is shortened to 25mm now, and O-ring is attached on both.

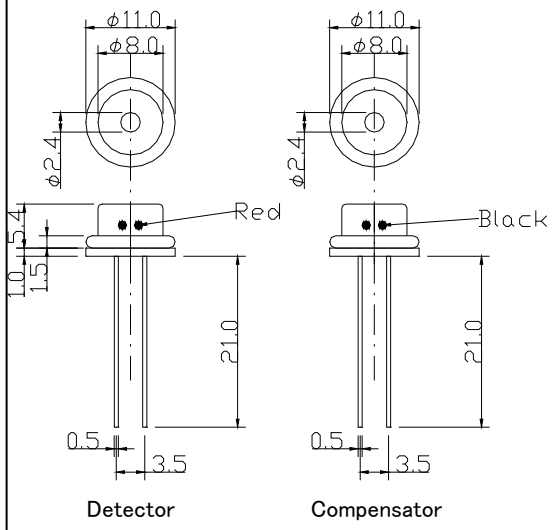


## ●Standard sensitivity

14 – 19mV/10%LEL of methane

## ●Relative sensitivity

| Gases | | LEL | R. S. | Gases | | LEL | R. S. |
|---|---|---|---|---|---|---|---|
| 1 | **Methane** | **5.00%** | **100** | 11 | Acetylene | 2.50 | - |
| 2 | Propane | 2.20 | 75 | 12 | CO | 12.50 | 110 |
| 3 | n-Butane | 1.80 | 70 | 13 | Acetone | 2.60 | 60 |
| 4 | n-Pentane | 1.40 | 70 | 14 | MEK | 1.90 | 50 |
| 5 | n-Hexane | 1.20 | 70 | 15 | Toluene | 1.20 | 60 |
| 6 | n-Heptane | 1.05 | 60 | 16 | Ethyl acetate | 2.20 | 60 |
| 7 | n-Octane | 0.95 | 55 | 17 | Hydrogen | 4.00 | 110 |
| 8 | Methanol | 6.70 | 100 | 18 | Ammonia | 15.00 | 135 |
| 9 | Ethanol | 3.30 | 70 | 19 | Gasoline Pb free | 1.20 | 60 |
| 10 | IPA | 2.20 | 60 | 20 | Ethylene | 2.70 | 90 |

* : 「-」 means that it is not a detected gas.

** : R.S. (relative sensitivity) is described in case that sensitivity to **methane** is 100.

# NC-180S

NC-180S gas sensor is a single header type for industrial use like NC-170S, and it has been already available in many customers for fixed applications. This type has a simplified explosion proof structure, however it is recommended that it is installed in the approved body by ATEX, CSA or etc. .

## ●Ratings, shape, dimensions

- Supply voltage 2.6V
- Current 170 – 190mV
  (When 2.6V is supplied.)
- Temperature -20 - +60℃
- Humidity Less than 95%RH
  (Without dew condensation)
- Measurement range
  Less than 100%LEL
- Shape As per the right figure
- Dimensions As per the right figure

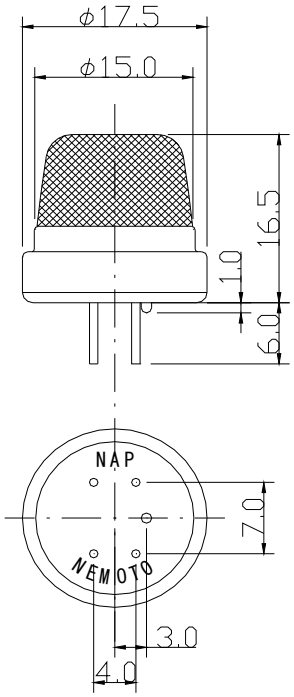


## ●Standard sensitivity and zero offset in air

28– 40mV/10%LEL of methane, -30 to +30mV in zero offset in air

## ●Relative sensitivity

| Gases | | LEL | R. S. | Gases | | LEL | R. S. |
|---|---|---|---|---|---|---|---|
| **1** | **Methane** | **5.00%** | **100** | 11 | Acetylene | 2.50 | - |
| 2 | Propane | 2.20 | 75 | 12 | CO | 12.50 | 110 |
| 3 | n-Butane | 1.80 | 70 | 13 | Acetone | 2.60 | 60 |
| 4 | n-Pentane | 1.40 | 70 | 14 | MEK | 1.90 | 50 |
| 5 | n-Hexane | 1.20 | 70 | 15 | Toluene | 1.20 | 60 |
| 6 | n-Heptane | 1.05 | 60 | 16 | Ethyl acetate | 2.20 | 60 |
| 7 | n-Octane | 0.95 | 55 | 17 | Hydrogen | 4.00 | 110 |
| 8 | Methanol | 6.70 | 100 | 18 | Ammonia | 15.00 | 135 |
| 9 | Ethanol | 3.30 | 70 | 19 | Gasoline Pb free | 1.20 | 60 |
| 10 | IPA | 2.20 | 65 | 20 | Ethylene | 2.70 | 90 |

* : 「-」 means that it is not a detected gas.

** : R.S. (relative sensitivity) is described in case that sensitivity to **methane** is 100.

# NC-180S-H

NC-180S-H gas sensor is a single header type hydrogen gas sensor for industrial application, and it has been already available in many customers for fixed applications. This type has a simplified explosion proof structure, however it is recommended that it is installed in the approved body by ATEX, CSA or etc.

## ●Ratings, shape, dimensions

- Supply voltage 1.6V
- Current 130 – 150mV (When 1.6V is supplied.)
- Temperature -20 - +60℃
- Humidity Less than 95%RH (Without dew condensation)
- Measurement range Less than 100%LEL
- Shape As per the right figure
- Dimensions As per the right figure

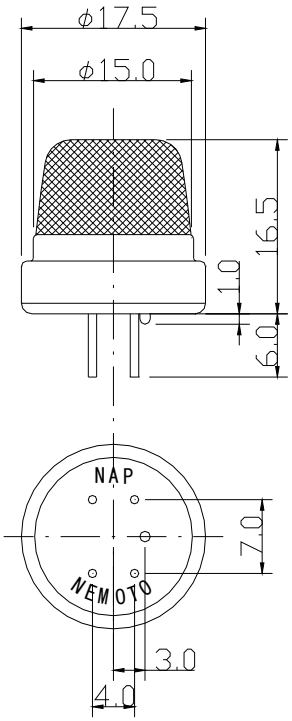


## ●Standard sensitivity and zero offset in air

35– 50mV/10%LEL of hydrogen, -30 to +30mV in zero offset in air

## ●Relative sensitivity

| Gases | | LEL | R. S. | Gases | | LEL | R. S. |
|---|---|---|---|---|---|---|---|
| 1 | Methane | 5.00% | 0 | 11 | Acetylene | 2.50 | - |
| 2 | Propane | 2.20 | 0 | 12 | CO | 12.50 | 115 |
| 3 | n-Butane | 1.80 | 0 | 13 | Acetone | 2.60 | 45 |
| 4 | n-Pentane | 1.40 | 5 | 14 | MEK | 1.90 | 45 |
| 5 | n-Hexane | 1.20 | 10 | 15 | Toluene | 1.20 | 70 |
| 6 | n-Heptane | 1.05 | 30 | 16 | Ethyl acetate | 2.20 | 10 |
| 7 | n-Octane | 0.95 | 20 | 17 | **Hydrogen** | **4.00** | **100** |
| 8 | Methanol | 6.70 | 100 | 18 | Ammonia | 15.00 | 120 |
| 9 | Ethanol | 3.30 | 40 | 19 | Gasoline Pb free | 1.20 | 10 |
| 10 | IPA | 2.20 | 45 | 20 | Ethylene | 2.70 | 65 |

* : 「-」 means that it is not a detected gas.

** : R.S. (relative sensitivity) is described in case that sensitivity to **hydrogen** is 100.

# NC-180S-N

NC-180S-N gas sensor is a single header type ammonia gas sensor for industrial application, and it has been already available in many customers for fixed applications. This type has a simplified explosion proof structure, however it is recommended that it is installed in the approved body by ATEX, CSA or etc.

## ●Ratings, shape, dimensions

- Supply voltage 2.2V
- Current 160 – 180mV
  (When 2.2V is supplied.)
- Temperature -20 - +60℃
- Humidity Less than 95%RH
  (Without dew condensation)
- Measurement range
  Less than 100%LEL
- Shape As per the right figure
- Dimensions As per the right figure

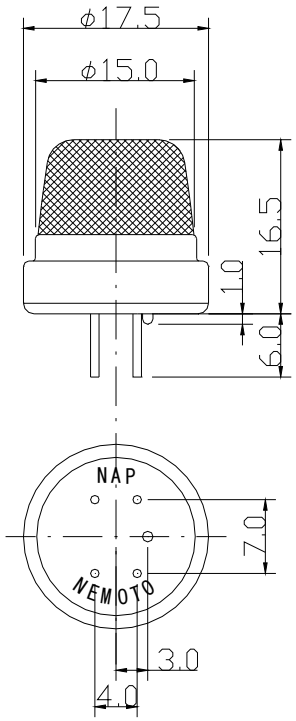


## ●Standard sensitivity and zero offset in air

35– 65mV/10%LEL of ammonia, -30 to +30mV in zero offset in air

## ●Relative sensitivity

| Gases | | LEL | R. S. | Gases | | LEL | R. S. |
|---|---|---|---|---|---|---|---|
| 1 | Methane | 5.00% | 0 | 11 | Acetylene | 2.50 | - |
| 2 | Propane | 2.20 | 20 | 12 | CO | 12.50 | 20 |
| 3 | n-Butane | 1.80 | 30 | 13 | Acetone | 2.60 | 60 |
| 4 | n-Pentane | 1.40 | 40 | 14 | MEK | 1.90 | 50 |
| 5 | n-Hexane | 1.20 | 45 | 15 | Toluene | 1.20 | 50 |
| 6 | n-Heptane | 1.05 | 40 | 16 | Ethyl acetate | 2.20 | 50 |
| 7 | n-Octane | 0.95 | 35 | 17 | Hydrogen | 4.00 | 75 |
| 8 | Methanol | 6.70 | 80 | 18 | **Ammonia** | **15.00** | **100** |
| 9 | Ethanol | 3.30 | 55 | 19 | Gasoline Pb free | 1.20 | 35 |
| 10 | IPA | 2.20 | 50 | 20 | Ethylene | 2.70 | 60 |

* : 「-」 means that it is not a detected gas.

** : R.S. (relative sensitivity) is described in case that sensitivity to **ammonia** is 100.

# NC-180-H

NC-180-H gas sensor is a matched pair type hydrogen gas sensor for industrial application, and it has been already available also in many customers for fixed applications. Since this type does not meet the structure of explosion proof by itself, it has to be installed in the approved body by ATEX, CSA or etc.

## ●Ratings, dimensions, shape

- Supply voltage 1.6V
- Current 130 – 150mV (When 1.6V is supplied.)
- Temperature -20 - +60℃
- Humidity Less than 95%RH (Without dew condensation)
- Measurement range Less than 100%LEL
- Shape As per the right figure
- Dimensions As per the right figure Pin length is shortened to 25mm now, and O-ring is attached on both.

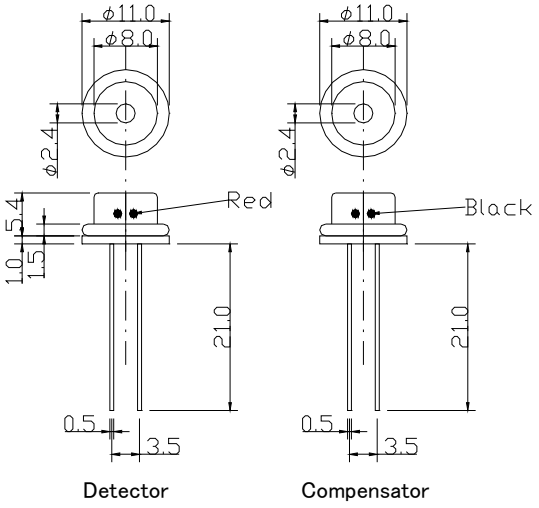


## ●Standard sensitivity and zero offset in air

10 – 20mV/10%LEL of hydrogen, -30 to +30mV in zero offset in air

## ●Relative sensitivity

| Gases | | LEL | R. S. | Gases | | LEL | R. S. |
|---|---|---|---|---|---|---|---|
| 1 | Methane | 5.00% | 0 | 11 | Acetylene | 2.50 | - |
| 2 | Propane | 2.20 | 0 | 12 | CO | 12.50 | 110 |
| 3 | n-Butane | 1.80 | 0 | 13 | Acetone | 2.60 | 40 |
| 4 | n-Pentane | 1.40 | 5 | 14 | MEK | 1.90 | 40 |
| 5 | n-Hexane | 1.20 | 10 | 15 | Toluene | 1.20 | 55 |
| 6 | n-Heptane | 1.05 | 25 | 16 | Ethyl acetate | 2.20 | 10 |
| 7 | n-Octane | 0.95 | 15 | 17 | **Hydrogen** | **4.00** | **100** |
| 8 | Methanol | 6.70 | 95 | 18 | Ammonia | 15.00 | 115 |
| 9 | Ethanol | 3.30 | 35 | 19 | Gasoline Pb free | 1.20 | 15 |
| 10 | IPA | 2.20 | 40 | 20 | Ethylene | 2.70 | 65 |

* : 「-」 means that it is not a detected gas.

** : R.S. (relative sensitivity) is described in case that sensitivity to **hydrogen** is 100.

# NC-180-A

NC-180-A gas sensor is a matched pair type acetylene gas sensor for industrial use, and it has been already available also in many customers for fixed applications. Since this type does not meet the structure of explosion proof by itself, it has to be installed in the approved body by ATEX, CSA or etc.

## ●Ratings, dimensions, shape

- Supply voltage 2.0V
- Current 140 – 170mV
  (When 2.0V is supplied.)
- Temperature -20 - +60℃
- Humidity Less than 95%RH
  (Without dew condensation)
- Measurement range
  Less than 100%LEL
- Shape As per the right figure
- Dimensions As per the right figure
  Pin length is shortened to 25mm now, and O-ring is attached on both.

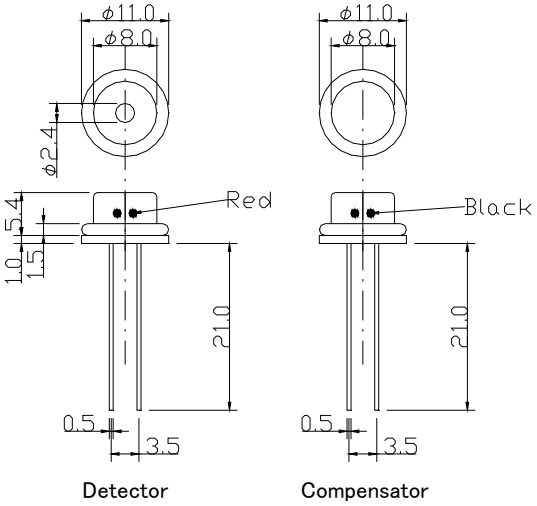


## ●Standard sensitivity and zero offset

8 – 20mV/10%LEL of acetylene, -30 to +30mV in zero offset in air

## ●Relative sensitivity

| Gases | | LEL | R. S. | Gases | | LEL | R. S. |
|---|---|---|---|---|---|---|---|
| 1 | Methane | 5.00% | 0 | **11** | **Acetylene** | **2.50** | **100** |
| 2 | Propane | 2.20 | 25 | 12 | CO | 12.50 | 110 |
| 3 | n-Butane | 1.80 | 35 | 13 | Acetone | 2.60 | 85 |
| 4 | n-Pentane | 1.40 | 55 | 14 | MEK | 1.90 | 75 |
| 5 | n-Hexane | 1.20 | 65 | 15 | Toluene | 1.20 | 70 |
| 6 | n-Heptane | 1.05 | 60 | 16 | Ethyl acetate | 2.20 | 70 |
| 7 | n-Octane | 0.95 | 55 | 17 | Hydrogen | 4.00 | 130 |
| 8 | Methanol | 6.70 | 130 | 18 | Ammonia | 15.00 | 165 |
| 9 | Ethanol | 3.30 | 90 | 19 | Gasoline Pb free | 1.20 | 65 |
| 10 | IPA | 2.20 | 80 | 20 | Ethylene | 2.70 | 95 |

* : R.S. (relative sensitivity) is described in case that sensitivity to **acetylene** is 100.

# NC-180-N

NC-180-N gas sensor is a matched pair type ammonia gas sensor for industrial use, and it has been already available also in many customers for fixed applications. Since this type does not meet the structure of explosion proof by itself, it has to be installed in the approved body by ATEX, CSA or etc.

## ●Ratings, dimensions, shape

- Supply voltage 2.2V
- Current 160 – 190mV (When 2.2V is supplied.)
- Temperature -20 - +60℃
- Humidity Less than 95%RH (Without dew condensation)
- Measurement range Less than 100%LEL
- Shape As per the right figure
- Dimensions As per the right figure Pin length is shortened to 25mm now, and O-ring is attached on both.

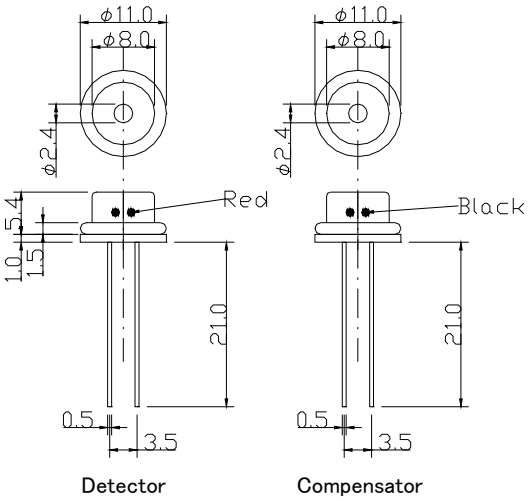


## ●Standard sensitivity and zero offset in air

15 – 25mV/10%LEL of ammonia, -30 to +30mV in zero offset in air

## ●Relative sensitivity

| Gases | | LEL | R. S. | Gases | | LEL | R. S. |
|---|---|---|---|---|---|---|---|
| 1 | Methane | 5.00% | 10 | 11 | Acetylene | 2.50 | - |
| 2 | Propane | 2.20 | 20 | 12 | CO | 12.50 | 85 |
| 3 | n-Butane | 1.80 | 40 | 13 | Acetone | 2.60 | 60 |
| 4 | n-Pentane | 1.40 | 55 | 14 | MEK | 1.90 | 45 |
| 5 | n-Hexane | 1.20 | 60 | 15 | Toluene | 1.20 | 40 |
| 6 | n-Heptane | 1.05 | 50 | 16 | Ethyl acetate | 2.20 | 60 |
| 7 | n-Octane | 0.95 | 45 | 17 | Hydrogen | 4.00 | 110 |
| 8 | Methanol | 6.70 | 100 | **18** | **Ammonia** | **15.00** | **100** |
| 9 | Ethanol | 3.30 | 70 | 19 | Gasoline Pb free | 1.20 | 50 |
| 10 | IPA | 2.20 | 60 | 20 | Ethylene | 2.70 | 70 |

* : 「-」 means that it is not a detected gas.

** : R.S. (relative sensitivity) is described in case that sensitivity to **ammonia** is 100.

# NC-50S

NC-50S gas sensor is a single header type for industrial application, and it has been already available also in many customers for handheld, wearable or portable applications. Since this type has a simplified explosion proof structure, however it is recommended that it is installed in the approved body by ATEX, CSA or etc.

●Ratings, dimensions, shape

- Supply voltage 4.25V
- Current 45 – 55mV (When 4.25V is supplied.)
- Temperature -20 - +60℃
- Humidity Less than 95%RH (Without dew condensation)
- Measurement range Less than 100%LEL
- Shape As per the right figure
- Dimensions As per the right figure

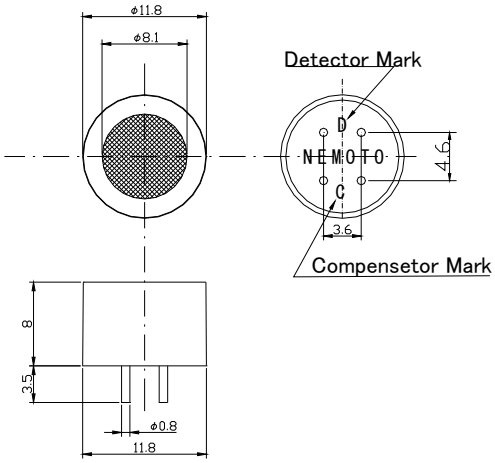


●Standard sensitivity and zero offset in air

60 – 110mV/10%LEL of methane

-20 to +20mV in zero offset in air (Zero offset compensated resister is required.)

●Relative sensitivity

| Gases | | LEL | R. S. | Gases | | LEL | R. S. |
|---|---|---|---|---|---|---|---|
| **1** | **Methane** | **5.00%** | **100** | 11 | Acetylene | 2.50 | - |
| 2 | Propane | 2.20 | 90 | 12 | CO | 12.50 | 160 |
| 3 | n-Butane | 1.80 | 90 | 13 | Acetone | 2.60 | 110 |
| 4 | n-Pentane | 1.40 | 85 | 14 | MEK | 1.90 | 90 |
| 5 | n-Hexane | 1.20 | 80 | 15 | Toluene | 1.20 | 90 |
| 6 | n-Heptane | 1.05 | 75 | 16 | Ethyl acetate | 2.20 | 90 |
| 7 | n-Octane | 0.95 | 70 | 17 | Hydrogen | 4.00 | 150 |
| 8 | Methanol | 6.70 | 160 | 18 | Ammonia | 15.00 | 130 |
| 9 | Ethanol | 3.30 | 120 | 19 | Gasoline Pb free | 1.20 | 70 |
| 10 | IPA | 2.20 | 110 | 20 | Ethylene | 2.70 | 130 |

* : 「-」 means that it is not a detected gas.

** : R.S. (relative sensitivity) is described in case that sensitivity to **methane** is 100.

# NC-70S

NC-70S gas sensor is a single header type for industrial application, and it has been already available also in many customers for handheld, wearable or portable applications. Since this type has a simplified explosion proof structure, however it is recommended that it is installed in the approved body by ATEX, CSA or etc.

## ●Ratings, dimensions, shape

- Supply voltage 3.0V
- Current 70 – 80mV
  (When 3.0V is supplied.)
- Temperature -20 - +60℃
- Humidity Less than 95%RH
  (Without dew condensation)
- Measurement range
  Less than 100%LEL
- Shape As per the right figure
- Dimensions As per the right figure

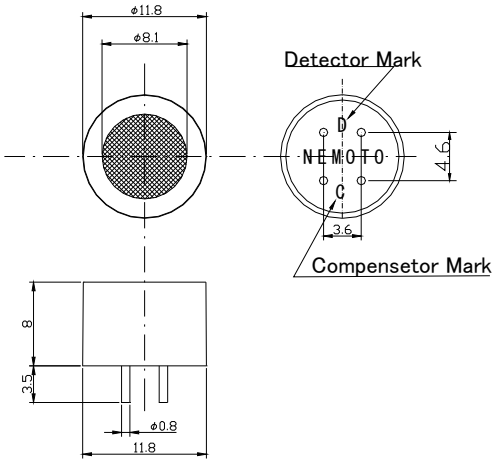


## ●Standard sensitivity and zero offset in air

50 – 80mV/10%LEL of methane

-20 to +20mV in zero offset in air (Zero offset compensated resister is required.)

## ●Relative sensitivity

| Gases | | LEL | R. S. | Gases | | LEL | R. S. |
|---|---|---|---|---|---|---|---|
| **1** | **Methane** | **5.00%** | **100** | 11 | Acetylene | 2.50 | - |
| 2 | Propane | 2.20 | 80 | 12 | CO | 12.50 | 160 |
| 3 | n-Butane | 1.80 | 75 | 13 | Acetone | 2.60 | 95 |
| 4 | n-Pentane | 1.40 | 70 | 14 | MEK | 1.90 | 70 |
| 5 | n-Hexane | 1.20 | 70 | 15 | Toluene | 1.20 | 80 |
| 6 | n-Heptane | 1.05 | 65 | 16 | Ethyl acetate | 2.20 | 80 |
| 7 | n-Octane | 0.95 | 60 | 17 | Hydrogen | 4.00 | 140 |
| 8 | Methanol | 6.70 | 150 | 18 | Ammonia | 15.00 | 150 |
| 9 | Ethanol | 3.30 | 100 | 19 | Gasoline Pb free | 1.20 | 75 |
| 10 | IPA | 2.20 | 90 | 20 | Ethylene | 2.70 | 110 |

* : 「-」 means that it is not a detected gas.

** : R.S. (relative sensitivity) is described in case that sensitivity to **methane** is 100.

SUNSTAR商斯达实业集团是集研发、生产、工程、销售、代理经销 、技术咨询、信息服务等为一体的高科技企业，是专业高科技电子产品生产厂家，是具有 10 多年历史的专业电子元器件供应商，是中国最早和最大的仓储式连锁规模经营大型综合电子零部件代理分销商之一,是一家专业代理和分銷世界各大品牌IC芯片和電子元器件的连锁经营綜合性国际公司。在香港、北京、深圳、上海、西安、成都等全国主要电子市场设有直属分公司和产品展示展销窗口门市部专卖店及代理分销商，已在全国范围内建成强大统一的供货和代理分销网络。 我们专业代理经销、开发生产电子元器件、集成电路、传感器、微波光电元器件、工控机/DOC/DOM电子盘、专用电路、单片机开发、MCU/DSP/ARM/FPGA软件硬件、二极管、三极管、模块等，是您可靠的一站式现货配套供应商、方案提供商、部件功能模块开发配套商。**专业以现代信息产业（计算机、通讯及传感器）三大支柱之一的传感器为主营业务，专业经营各类传感器的代理、销售生产、网络信息、科技图书资料及配套产品设计、工程开发。我们的专业网站——中国传感器科技信息网（全球传感器数据库） www.SENSOR-IC.COM 服务于全球高科技生产商及贸易商，为企业科技产品开发提供技术交流平台。欢迎各厂商互通有无、交换信息、交换链接、发布寻求代理信息。欢迎国外高科技传感器、变送器、执行器、自动控制产品厂商介绍产品到 中国，共同开拓市场。**本网站是关于各种传感器-变送器-仪器仪表及工业自动化大型专业网站,深入到工业控制、系统工程计 测计量、自动化、安防报警、消费电子等众多领域，把最新的传感器-变送器-仪器仪表买卖信息,最新技术供求,最新采购商,行业动态，发展方向，最新的技术应用和市场资讯及时的传递给广大科技开发、科学研究、产品设计人员。本网站已成功为石油、化工、电力、医药、生物、航空、航天、国防、能源、冶金、电子、工业、农业、交通、汽车、矿山、煤炭、纺织、信息、通信、IT、安防、环保、印刷、科研、气象、仪器仪表等领域从事科学研究、产品设计、开发、生产制造的科技人员、管理人员 、和采购人员提供满意服务。 **我公司专业开发生产、代理、经销、**销售各种传感器、变送器、敏感元器件、开关、执行器、仪器仪表、自动化控制系统： 专门从事设计、生产、销售各种传感器、变送器、各种测控仪表、热工仪表、现场控制器、计算机控制系统、数据采集系统、各类环境监控系统、专用控制系统应用软件以及嵌入式系统开发及应用等工作。如热敏电阻、压敏电阻、温度传感器、温度变送器、湿度传感器、 湿度变送器、气体传感器、 气体变送器、压力传感器、 压力变送、称重传感器、物（液）位传感器、物（液）位变送器、流量传感器、 流量变送器、电流（压）传感器、溶氧传感器、霍尔传感器 、图像传感器、超声波传感器、位移传感器、速度传感器、加速度传感器、扭距传感器、红外传感器、紫外传感器、 火焰传感器、激光传感器、振动传感器、轴角传感器、光电传感器、接近传感器、干簧管传感器、继电器传感器、微型电泵、磁敏（阻）传感器 、压力开关、接近开关、光电开关、色标传感器、光纤传感器、齿轮测速传感器、 时间继电器、计数器、计米器、温控仪、固态继电器、调压模块、电磁铁、电压表、电流表等特殊传感器 。 同时承接传感器应用电路、产品设计和自动化工程项目。

欢迎索取免费详细资料、设计指南和光盘 ；产品凡多，未能尽录，欢迎来电查询。

更多产品请看本公司产品专用销售网站:
商斯达中国传感器科技信息网：http://www.sensor-ic.com/
商斯达工控安防网：http://www.pc-ps.net/
商斯达电子 元器件网：http://www.sunstare.com/
商斯达微波光电产品网:HTTP://www.rfoe.net/
商斯达消费电子产品网://www.icasic.com/
商斯达军工产品网:http://www.junpinic.com/
商斯达实业科技产品网://www.sunstars.cn/传感器销售热线：

地址：深圳市福田区福华路福庆街鸿图大厦 1602 室
电话：0755-83607652 83376489 83376549 83370250 83370251 82500323
传真：0755-83376182 （0）13902971329 MSN: SUNS8888@hotmail.com
邮编：518033 E-mail:szss20@163.com QQ: 195847376
深圳赛格展销部：深圳华强北路赛格电子市场 2583 号 电话：0755-83665529
技术支持: 0755-83394033 13501568376

SUNSTAR商斯达实业集团是集研发、生产、工程、销售、代理经销 、技术咨询、信息服务等为一体的高科技企业，是专业高科技电子产品生产厂家，是具有 10 多年历史的专业电子元器件供应商，是中国最早和最大的仓储式连锁规模经营大型综合电子零部件代理分销商之一,是一家专业代理和分銷世界各大品牌IC芯片和電子元器件的连锁经营綜合性国际公司。在香港、北京、深圳、上海、西安、成都等全国主要电子市场设有直属分公司和产品展示展销窗口门市部专卖店及代理分销商，已在全国范围内建成强大统一的供货和代理分销网络。 我们专业代理经销、开发生产电子元器件、集成电路、传感器、微波光电元器件、工控机/DOC/DOM电子盘、专用电路、单片机开发、MCU/DSP/ARM/FPGA软件硬件、二极管、三极管、模块等，是您可靠的一站式现货配套供应商、方案提供商、部件功能模块开发配套商。**专业以现代信息产业（计算机、通讯及传感器）三大支柱之一的传感器为主营业务，专业经营各类传感器的代理、销售生产、网络信息、科技图书资料及配套产品设计、工程开发。我们的专业网站——中国传感器科技信息网（全球传感器数据库） www.SENSOR-IC.COM 服务于全球高科技生产商及贸易商，为企业科技产品开发提供技术交流平台。欢迎各厂商互通有无、交换信息、交换链接、发布寻求代理信息。欢迎国外高科技传感器、变送器、执行器、自动控制产品厂商介绍产品到 中国，共同开拓市场。**本网站是关于各种传感器-变送器-仪器仪表及工业自动化大型专业网站,深入到工业控制、系统工程计 测计量、自动化、安防报警、消费电子等众多领域，把最新的传感器-变送器-仪器仪表买卖信息,最新技术供求,最新采购商,行业动态，发展方向，最新的技术应用和市场资讯及时的传递给广大科技开发、科学研究、产品设计人员。本网站已成功为石油、化工、电力、医药、生物、航空、航天、国防、能源、冶金、电子、工业、农业、交通、汽车、矿山、煤炭、纺织、信息、通信、IT、安防、环保、印刷、科研、气象、仪器仪表等领域从事科学研究、产品设计、开发、生产制造的科技人员、管理人员 、和采购人员提供满意服务。 **我公司专业开发生产、代理、经销、**销售各种传感器、变送器、敏感元器件、开关、执行器、仪器仪表、自动化控制系统： 专门从事设计、生产、销售各种传感器、变送器、各种测控仪表、热工仪表、现场控制器、计算机控制系统、数据采集系统、各类环境监控系统、专用控制系统应用软件以及嵌入式系统开发及应用等工作。如热敏电阻、压敏电阻、温度传感器、温度变送器、湿度传感器、 湿度变送器、气体传感器、 气体变送器、压力传感器、 压力变送、称重传感器、物（液）位传感器、物（液）位变送器、流量传感器、 流量变送器、电流（压）传感器、溶氧传感器、霍尔传感器 、图像传感器、超声波传感器、位移传感器、速度传感器、加速度传感器、扭距传感器、红外传感器、紫外传感器、 火焰传感器、激光传感器、振动传感器、轴角传感器、光电传感器、接近传感器、干簧管传感器、继电器传感器、微型电泵、磁敏（阻）传感器 、压力开关、接近开关、光电开关、色标传感器、光纤传感器、齿轮测速传感器、 时间继电器、计数器、计米器、温控仪、固态继电器、调压模块、电磁铁、电压表、电流表等特殊传感器 。 同时承接传感器应用电路、产品设计和自动化工程项目。

更多产品请看本公司产品专用销售网站:
商斯达中国传感器科技信息网：http://www.sensor-ic.com/
商斯达工控安防网：http://www.pc-ps.net/
商斯达电子 元器件网：http://www.sunstare.com/
商斯达微波光电产品网:HTTP://www.rfoe.net/
商斯达消费电子产品网://www.icasic.com/
商斯达军工产品网:http://www.junpinic.com/
商斯达实业科技产品网://www.sunstars.cn/传感器销售热线：

地址：深圳市福田区福华路福庆街鸿图大厦 1602 室
电话：0755-83607652 83376489 83376549 83370250 83370251 82500323
传真：0755-83376182 （0）13902971329 MSN: SUNS8888@hotmail.com
邮编：518033 E-mail:szss20@163.com QQ: 195847376
深圳赛格展销部：深圳华强北路赛格电子市场 2583 号 电话：0755-83665529 25059422
技术支持: 0755-83394033 13501568376

欢迎索取免费详细资料、设计指南和光盘 ；产品凡多，未能尽录，欢迎来电查询。

北京分公司：北京海淀区知春路 132 号中发电子大厦 3097 号
TEL：010-81159046 82615020 13501189838 FAX：010-62543996
上海分公司：上海市北京东路 668 号上海賽格电子市场 D125 号
TEL：021-28311762 56703037 13701955389 FAX：021-56703037
西安分公司：西安高新开发区 20 所(中国电子科技集团导航技术研究所)
西安劳动南路 88 号电子商城二楼 D23 号
TEL：029-81022619 13072977981 FAX:029-88789382