Installation Manual

Model 437T

25 Gallon Automatic Preservative Applicator

HARVEST TEC

Equipment and Products for Quality Hay.™

P.O. Box 63 • 2821 Harvey Street • Hudson, WI 54016
800-635-7468 • www.harvesttec.com

437T-15-INST
12/15

(intentionally blank)

HARVEST TEC 437T TABLE OF CONTENTS

	PAGE
Installation Kit Reference Chart	**4**
Tools Needed	**4**
Installation of Applicator	**5-10**
1. Installation of mounting brackets, tank, pump plate, and drain / fill line.	5-6
2. Placement of Spray Nozzle Assembly	7
3. Installation of Plumbing	7
4. Installation of Moisture Sensing Pads	8
5. Power cable and main wiring harness installation	9-10
Wiring Diagram	9
Installation of controls	10
Maintenance	**11**
Winter Storage	**11**
Backup Fuse	**11**
Pin Outs	**12-13**
Parts Breakdown	**14-18**
437T Base kit	14
Pump Plate	15
Moisture pads and hoses	16
Control box and wiring	17
437-SO Install kit	18
Warranty Statement	**19**

Introduction

Congratulations on purchasing a Harvest Tec Model 437T applicator. This applicator is designed to apply Harvest Tec buffered propionic acid. The use of other products can cause application problems and damage to system components. The model 437T base kit includes the following parts: Tank, Frame, Pumps, Hose, Baler Mounted Processor, Touchscreen Display, Moisture Sensors, and Miscellaneous Hardware. The applicator can be installed on most round balers with the proper installation kit. Before installing the unit on the baler, make sure you have the proper installation kit. (See the chart below.) If you are unsure about your installation kit contact your dealership for specifications. For your convenience we have included a parts break down for the model 437T applicator. If something goes wrong, bring this manual into the dealership so they can order the correct parts for you. Ordering the correct part number is very important. It will save you time, money, and your crop.

Installation Kit Reference Chart

BALER MAKE	BALER MODEL	INSTALLATION KIT
Kuhn	VB 2160 & VB 2190	030-0437-SO

Tools Needed

- Standard wrench set
- Standard socket set
- Standard screw driver or 5/16” nut driver
- Side cutter
- Hose cutter
- Crescent wrench
- Hammer
- Metal drilling and cutting tools
- Center Punch

Installation of Applicator

1. Installation of Mounting Brackets, Tank, Pump Plate and Drain / Fill Line

Locate tank saddle legs (001-4442K & 001-4442D) as shown in figure 1. Fasten leg 001-4442D to 001-4442K with two 3/8 x 1 1/4” bolts, locks, flats, and nuts at point A.

Secure 001-4442K to the baler using a 3/8 x 1 1/4” bolt, flat, and nut through the existing hole shown at point B on figure 2. Allow the gusset flange lip to rest on top of the baler tongue. Clamp both legs to secure bracket to baler and drill six 9/16” on 001-4442K and two 9/16” holes on 001-4442D, using the bracket as a guide. Secure the legs to the baler frame with eight 1/2 X 1 1/4” bolts, locks, flats, and nuts. Tighten all hardware.

Locate the legs support bracket (001-4442E). Fasten the support to the baler, in the existing holes, as shown at point C in figure 3. Use two 5/16 x 1” bolts, flats, locks and nuts. Tighten all hardware.

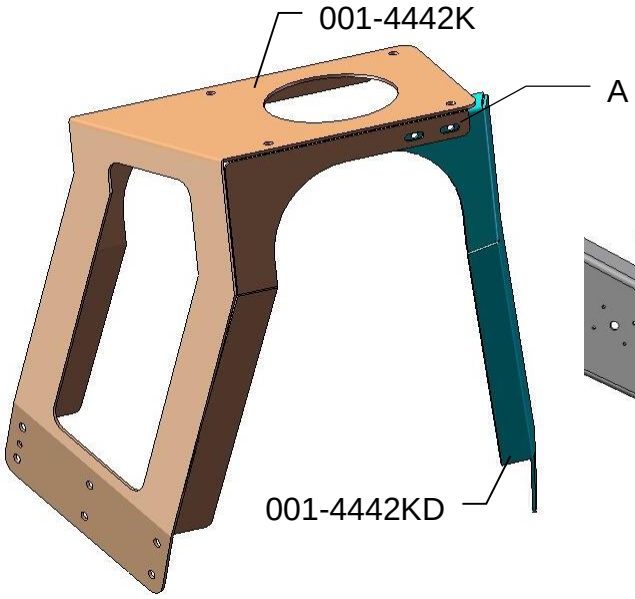

Figure 1

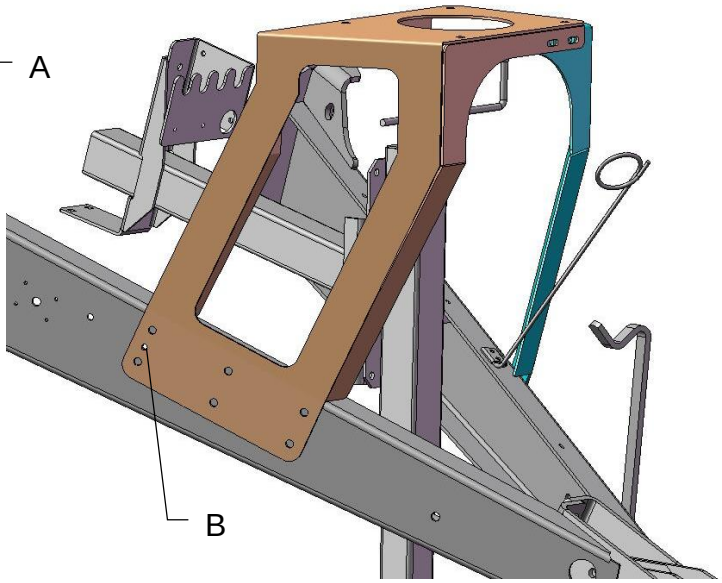

Figure 2

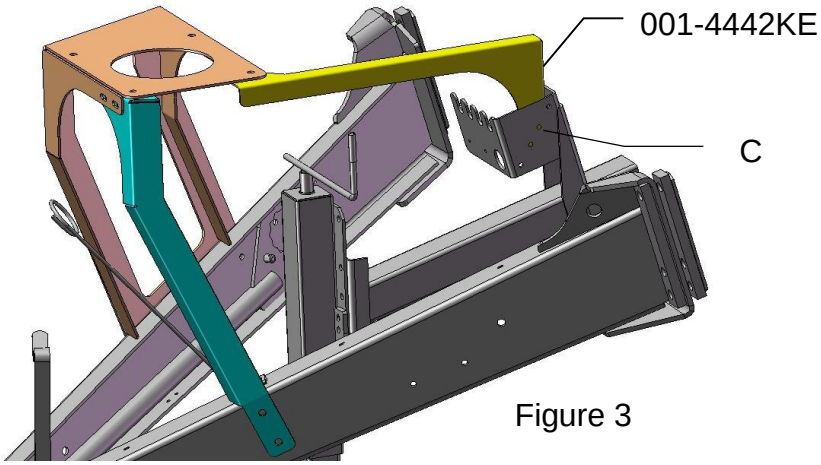

Figure 3

Installation of Mounting Brackets, Tank, Pump Plate and Drain / Fill Line (continued)

Locate the tank and saddle assembly. Position the tank and saddle so that the side tank fitting is towards the right side of the baler. The additional two weld-nuts on the saddle will then be facing forward as shown in point E on figure 4. Fasten the tank saddle to the frame using four 1/2 x 1 1/4” bolts, locks, flats, and nuts. Tighten all hardware.

Locate the pump plate assembly. Remove the four flange bolts holding the two pieces of the pump plate together. Mount the pump plate mounting bracket (001-4646C) as shown below point E in figure 5. Attach the bracket to the saddle using two 3/8 x 1” bolts, locks, and flat washers. Tighten all hardware. Attach the remaining half of the pump and secure with the four 3/8 x 3/4” flange bolts.

Locate the drain/fill 3/4” hose, 3/4” elbow, 3/4” straight fitting, valve, quick coupler and mounting bracket. Thread 3/4" elbow fitting (#003-EL3434) into side tank fitting. Run 3/4" hose from the elbow down the frame to the bottom of the baler. Drill 1/4" holes to accept the valve holder bracket and use 5/16” x 1 1/4” self-tapping screws. Connect valve assembly to other end of hose. Place hose clamps on both ends.

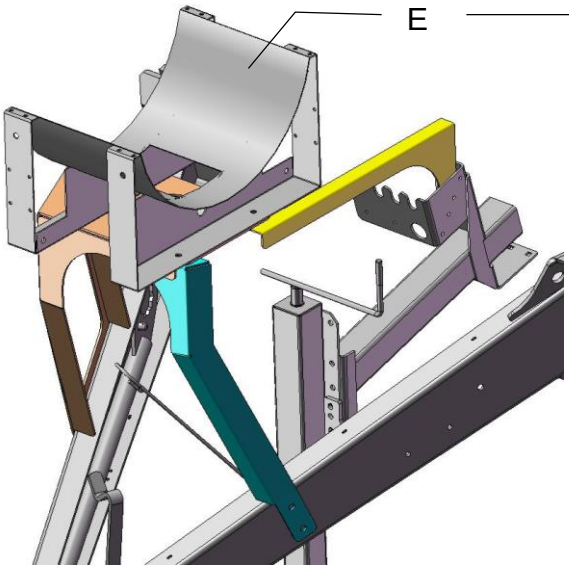

Figure 4

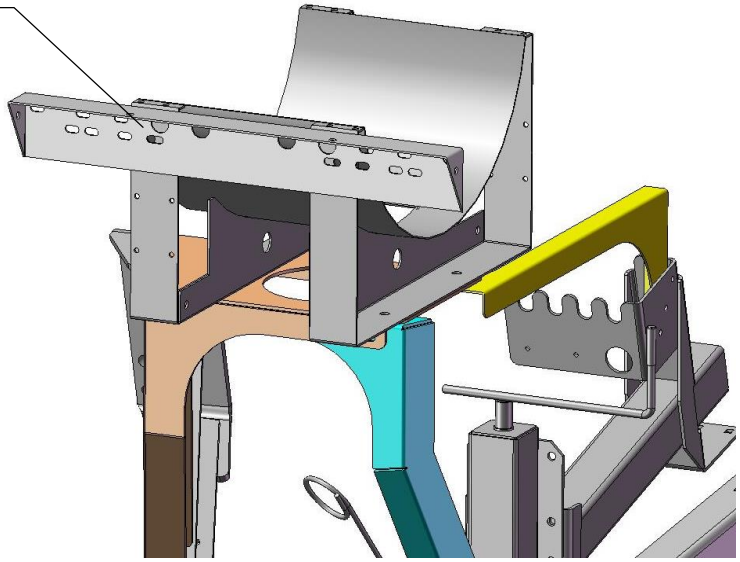

Figure 5

2. Placement of Spray Nozzle Assembly

Locate the spray shield holder (001-4704E2) and spray shield (001-4703GK). Center the spray shield holder over the rotor. Clamp the bracket and drill two 7/16” holes point F on figure 6. Secure the bracket using two 3/8 x 1 1/4 bolts, locks, flats, and nuts. Tighten all hardware. Install the shield and secure using the two lynch pins (008-4576).

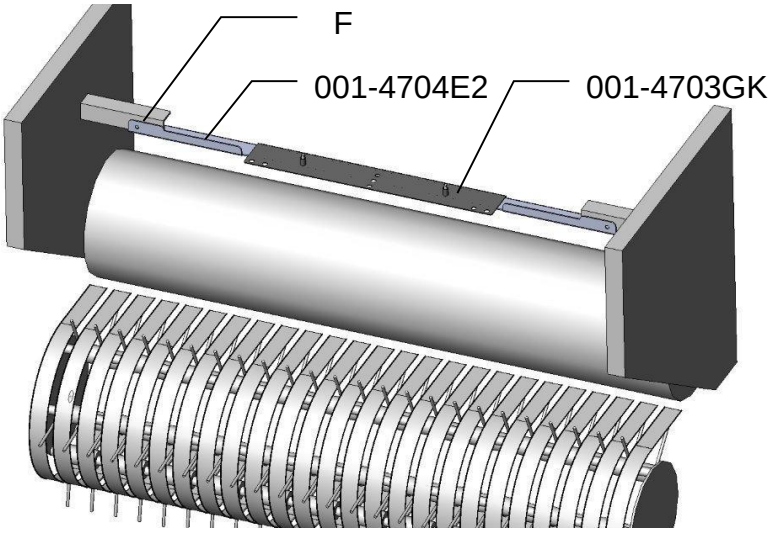

Figure 6

3. Installation of Plumbing

A. Intake
Use the 003-EL3412 on the bottom of the tank to route 1/2” line (002-9001) to the 003-A1212 fitting on the ball valve already attached to the pump plate. Attach hose clamps (003-9003) on both of the fittings.

B. Discharge
The three – 1/4" hose assembly will be used to attach the pumps to the spray nozzles. The pump order is, from closest to the filter bowl, 1,2, and 3. Pump 1 will attach to the three main nozzles. Pump 2 will use the green hose and Pump 3 will use the blue hose to attach to the auxiliary nozzles.

C. High and Low Output Tips
Your baler comes with two sets of tips: a low set and a high set.
-**The low set will cover outputs of 32 to 440 lbs/hr or approximately 8-27 tons/hour.**
Install the following tips for low output:
Clear hose to silver tips on all three connected nozzles.
Green hose to green tip.
Blue hose to red tip.
-The high set will cover outputs of 84 to 632 lbs/hr or approximately 21-40 tons/hour. Install the following tips for high output:
Clear hose to white outside tips and orange middle tip.
Green hose to blue tip.
Blue hose to gray tip.

****Refer to Tip Output under APPLICATION RATE of the control unit to calibrate****

4. Installation of Moisture Sensing Pads

Figure 1

1. If your baler is equipped with bale shaping pads, remove disc and use existing hole (may need to be drilled larger, 3/4") to install new moisture sensing discs.
2. If your baler is not equipped with bale shaping pads you will need to drill a hole in the chamber directly behind and above the starting roll (Figure 1).
3. The mounting hole will be 3/4" in diameter. Use a plastic pad (006-4641F) and place it into the baler to use as a template. The bottom edge of the pad will be placed 1” up from starting roll and 2” from the back of the bale chamber. (Figure 1)

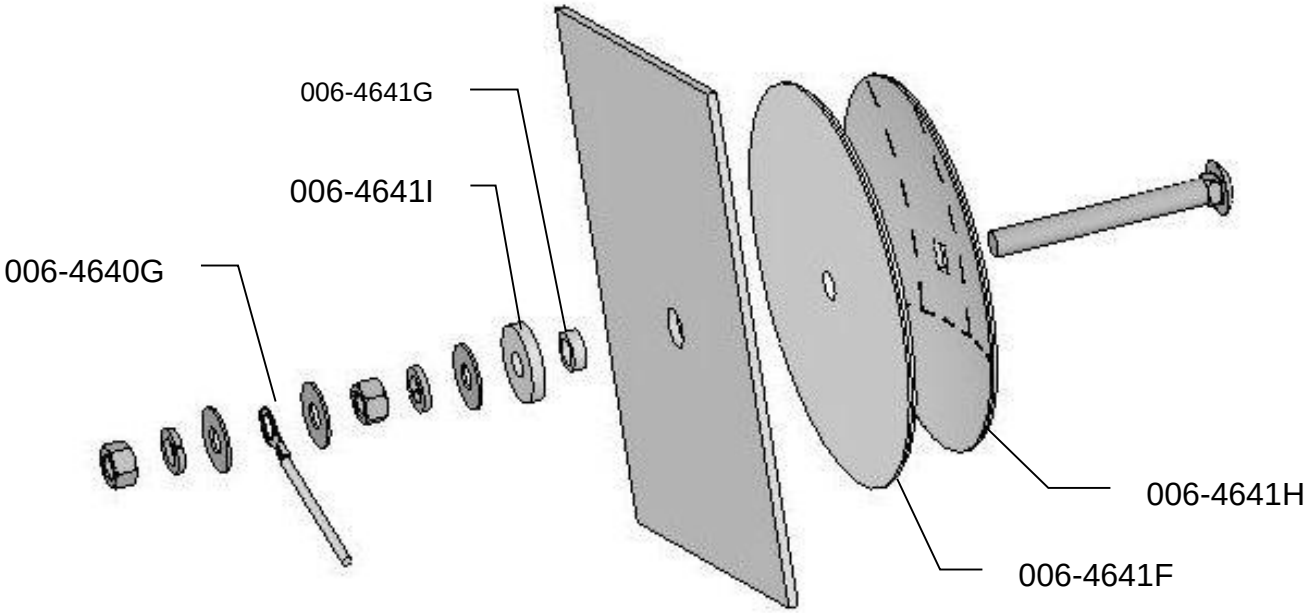

4. Locate the 006-4641G. The piece will need to be cut down to size. Use the already machined line in the bushing to cut off the small piece shown above.
5. Depending on the baler the bolt may need to be trimmed for proper fit.
6. Tighten all of the hardware to 50 ft/lbs.
7. Make sure that the plastic pad is protecting all metal surfaces of the disc from touching baler.
8. Run the moisture wire harness (006-4640G) from pump plate area to each disc securing with cable ties.
9. Apply silicone over nuts and washers.

5. Power Cable and Main Wiring Harness Installation

1. Connect the power harness (006-4640A) to the battery (12 volt) using the red wire with fuse to the positive side and the black wire to the negative
   a. **The power harness must be connected to the battery!** The unit will draw more amps than convenience outlets can handle. Any modifications of the power harness will void systems warranty. **CONTACT HARVEST TEC BEFORE MODIFICATIONS.**
   b. **This unit will not function on positive ground tractors.**
   c. **If the unit loses power while operating it will not keep track of accumulated pounds of product used.**
2. The power harness (006-4640A) will run from the tractor battery to the hitch. The power harness (006-4660R) will connect to the tractor power harness (006-4640A) at the hitch. Run the Communication harness (006-4660N) from the cab to the hitch. This wire will connect to the Communication harness (006-4660S). These wires will run together to the Baler Mounted Processor (006-4671RB).
3. Connect Communication harness (006-4660N) to Bluetooth Receiver (030-4672A) mounted in cab.
   a. Mount Bluetooth Receiver (030-4672A) in safe location as close to iPad as possible in cab.
4. Connect Flow Meter (006-4725A) and pump harness (006-4660Z) to the Baler Mounted Processor.
5. Attach moisture cable (006-4640G) to Baler Mounted Processor.
6. Install Baler Mounted Processor in pump plate using 5/16” lock, nut and flat washers.

NOTE: The plugs on the Baler Mounted Processor must face down. Failure to mount correctly will void systems warranty.

SYSTEM WIRING DIAGRAM

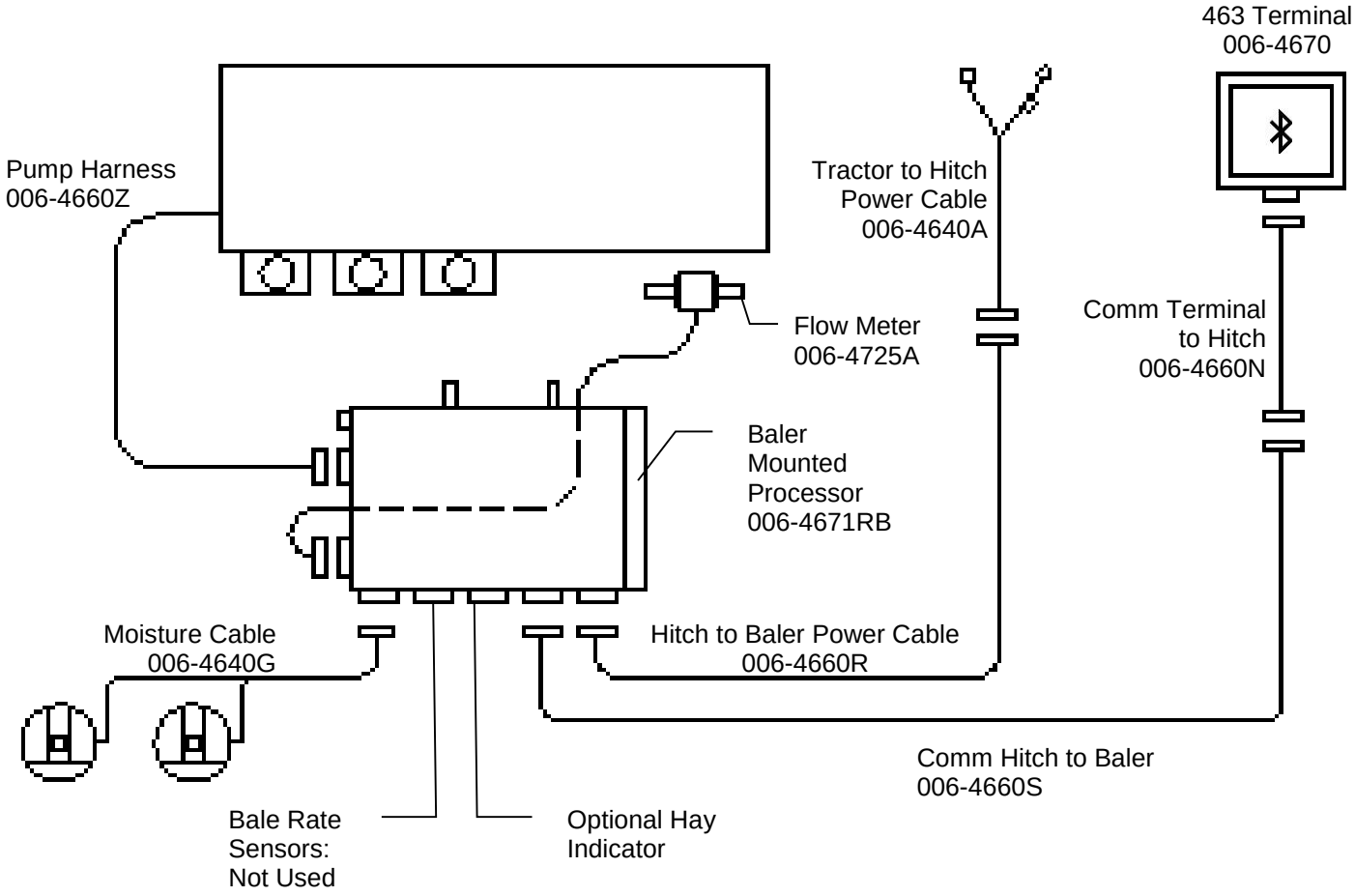

Installation of the Control

Installation of Bluetooth Receiver

Locate a safe location in the cab of the tractor to place the Bluetooth Receiver (030-4672A). Recommended location is as close to the iPad being used as possible.

Connect communication wire (006-4660N) to the bottom of the receiver.

Optional Touch Screen Display

Use suction cup mount (001-2012SCM) to position the monitor in the cab. Make sure the glass is clean before installing the suction cup mount. If an open cabbed tractor is used, use the supplied #10 screws for installation on the fender. If unit is mounted on fender it will need to be removed at night and stored in a clean, dry area. Use the Ram mount (001-2012H) swivel-positioning nut to tighten the entire assembly. Adjust it so that you can view the entire screen and be able to use the touch screen without interfering with other tractor functions.

Connect communication wire (006-4660N) to the bottom of the terminal.

Installation of Display Cable Harness

On the bottom of the touch screen display you will find the main display wire plug. The harness (006-4660N) will need to be attached to this plug and run through the cab towards the hitch where it will connect with its matching harness (006-4660L) from the BMP.

Maintenance

1. Clean the tip strainers and main strainer every 10 hours of operation.
2. Depending on the product being used, the system may need to be flushed with water at a regular interval (consult with manufacturer of the chemical.) If Harvest Tec product is being used, flushing is not necessary.
3. Although the pump can run dry, extended operation of a dry pump will increase wear. Watch the preservative level in the tank.
4. Cover the automatic cab terminal on open station tractors if left outside.
5. Pump performance may start to decline after 400 hours (5000 bales on large round balers) of use. Rebuilding the pump is a simple procedure if the motor is not damaged. Order pump rebuilding kit #007-4581 for the automatic unit.
6. If you are using bacterial inoculants, flush your system daily after every use.
7. Clean tank cap every 10 hours of operation.

Maintenance Schedule

	Daily	10 hrs	400 hrs	Weekly	Monthly	Season
Diagnostics	X					X
Filter bowl cleaning		X				X
Tip screen cleaning		X				X
Tank cap cleaning		X				X
Dielectric grease connections					X	X
Rebuild pump			X			
Battery connections				X		X
Check valves			X			
Visually inspect hoses				X		X

Winter Storage

1. Thoroughly flush the system with water.
2. Remove the filter bowl and run dry until the water has cleared out of the intake side.
3. Remove the red plug from the bottom of the pump, drain, and run the pump for 30 seconds or until dry.
4. Drain all lines on the outlet side.
5. Never use oils or alcohol based anti-freeze in the system.
6. For spring start-up, if the pump is frozen, turn off the power immediately to avoid burning the motor out. The pump head can be disassembled and freed or rebuilt in most cases.
7. Disconnect power from the system.
8. Remove display from the tractor and store in a warm, dry place.

Backup Fuse

The Model 463 is equipped with a backup system if your display is not functioning. This function is intended for use only as a temporary means for application and not as a way to apply preservative over multiple fields or for a lengthy amount of time. The baler mounted processor has a location for a backup fuse on the same side as the pump and flow meter harness that bypasses all other system inputs and applies preservative using one pump (Pump Three) at a constant lbs/hour shown below. These values are based upon on input voltage of 13.5 DC. Insert at least a 10 amp up to 20 amp fuse (3 AG style) into the backup fuse port to activate the bypass. The system will not turn off or pause until the fuse is removed. The main fuse must also be functional for the backup fuse to work.

	Tip Set	Output (lbs/hour)
463	High	230
	Low	180

Pin Outs

A. Main power connector mounted on battery

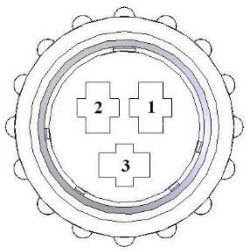

Pin 1	Red	+ 12 V input from tractor supply
Pin 2	Black	Ground from tractor supply
Pin 3	Not used	

B. Main power connector mounted on BMP

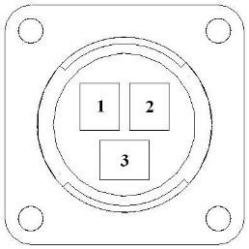

Pin 1	Red	+ 12 V input from tractor supply
Pin 2	Black	Ground from tractor supply
Pin 3	Not used	

C. Pump connection colors

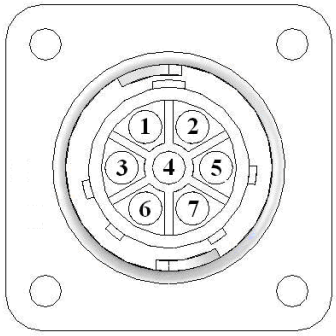

Pin 1	Black with orange markings	Pump 1 ground
Pin 2	Black with green markings	Pump 2 ground
Pin 3	Black with yellow markings	Pump 3 ground
Pin 4	Not used	
Pin 5	Orange with black markings	Pump 1 positive
Pin 6	Green with black markings	Pump 2 positive
Pin 7	Yellow with black markings	Pump 3 positive

D. Flow meter connection on BMP

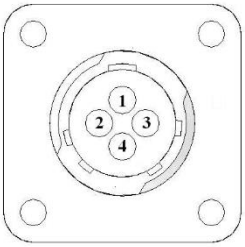

Pin 1	White	5 - 12 V (+) supply
Pin 2	Green	Ground
Pin 3	Brown	Signal
Pin 4	Black	Shield

E. Connector for Hay Indicator option on BMP

Note: Hay indicators are an option that will turn the system on and off automatically as hay enters the pickup of the baler.

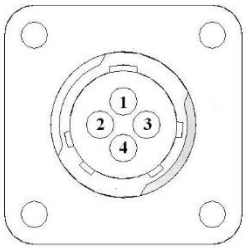

Pin 1	Red	+12V
Pin 2	Black	Ground
Pin 3	White	Signal wire
Pin 4	Not used	

F. Moisture connector mounted on BMP

Pin 1	Brown	Moisture input 1
Pin 2	Blue	Moisture input 2
Pin 3	Brown	Diagnostic 1
Pin 4	Blue	Diagnostic 2
Pin 5	Silver	Shield
Pin 6	Silver	Shield
Pin 7	Not used	
Pin 8	Not used	
Pin 9	Not used	

G. Communication harness Bluetooth Receiver or display to hitch

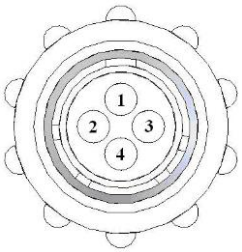

Pin 1	Red	Power to display
Pin 2	Black	Ground to display
Pin 3	Blue	Comm channel OH
Pin 4	Orange	Comm channel OL

H. Communication harness hitch to baler mounted processor

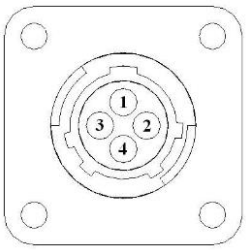

Pin 1	Red	Power to display
Pin 2	Black	Ground to display
Pin 3	Blue	Comm channel OH
Pin 4	Orange	Comm channel OL

Harvest Tec Model 437 Base Kit

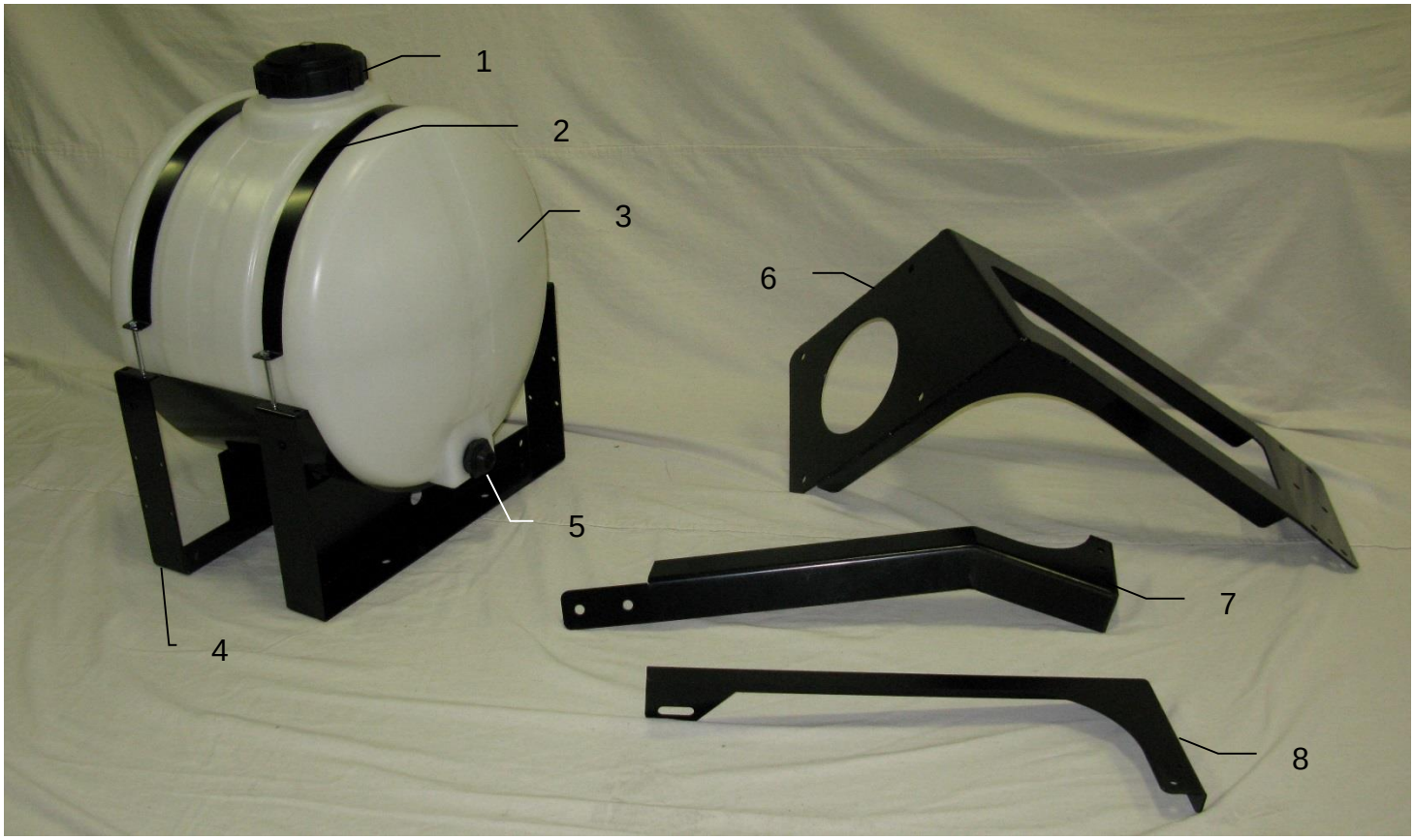

Ref#	Description	Part #	Qty
1	Tank Cap	005-9022C	1
	Tank Cap Gasket	005-9022CG	1
2	Tank Strap	001-4402	2
3	Tank	005-9022	1
4	Saddle	001-4442	1
5	Tank Fitting	005-9100	1
6	Tank mount bracket	001-4442K	1
7	Tank support	001-4442KD	1
8	Mounting support	001-4442KE	1

Parts Breakdown for Pump Plate

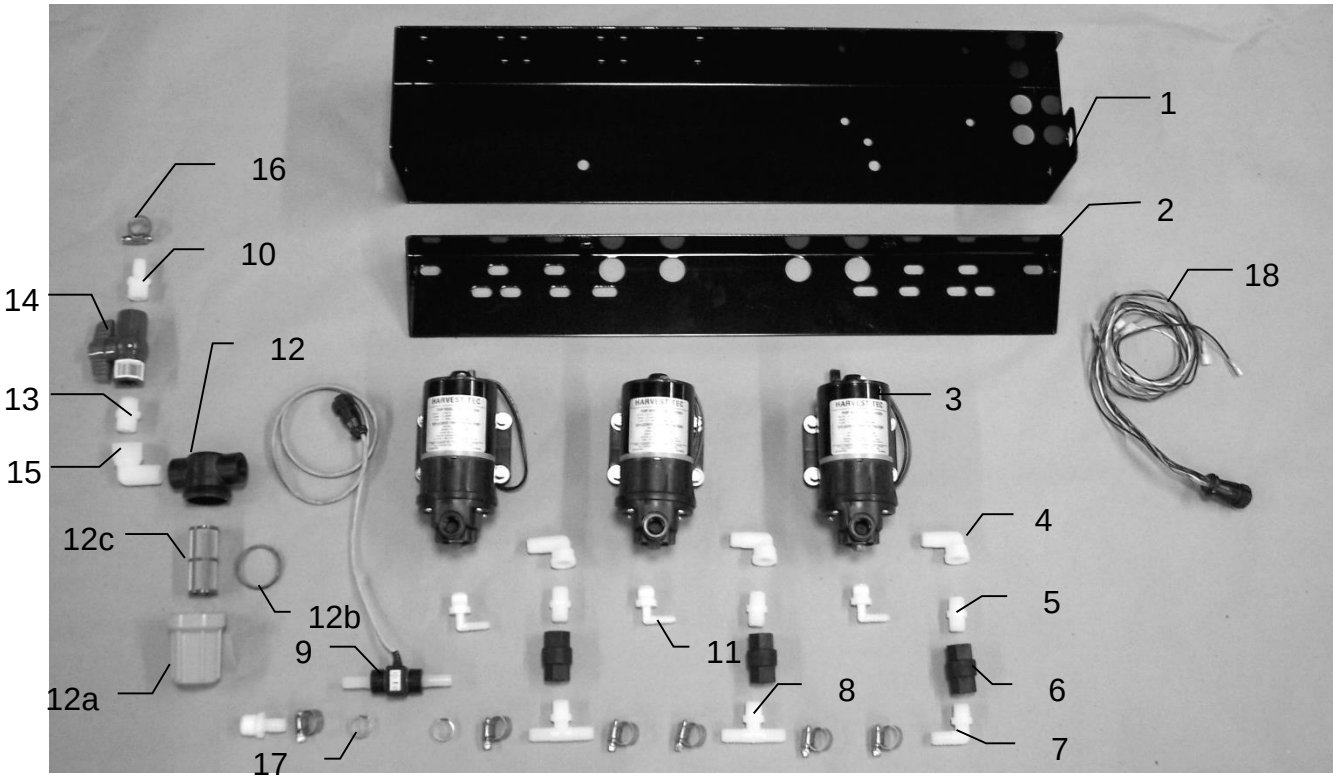

Ref#	Description	Part#	Qty
1	Pump plate	001-4646D	1
2	Mounting Bracket	001-4646C	1
3	Pump	007-4120H	3
4	Street elbow fitting	003-SE38	3
5	Nipple fitting	003-M3838	3
6	Check valve	002-4566F	3
7	Elbow fitting	003-EL3812	1
8	Tee fitting	003-T3812HB	2
9	Flow meter assembly	006-4725A	1
10	Straight fitting	003-A1212	2
11	Elbow fitting	003-JEL1238	3
12	Filter bowl assembly	002-4315-100	1
12a	Filter bowl only	002-4315F	1
12b	Filter bowl gasket	002-4315D	1
12c	Filter bowl screen	002-4315A	1
13	Nipple fitting	003-M1212	1
14	Ball valve	002-2212	1
15	Street elbow fitting	003-SE12	1
16	Hose clamp	003-9003	7
17	Hose clamp (Flow Meter)	003-9005	2
18	Pump Cable	006-4660Z	1
NP	Pump rebuild kit (1 per pump)	007-4581	1
NP	Elbow	003-EL1212	1
NP	Not Pictured		

Moisture Pad, Drain / Fill and Hoses

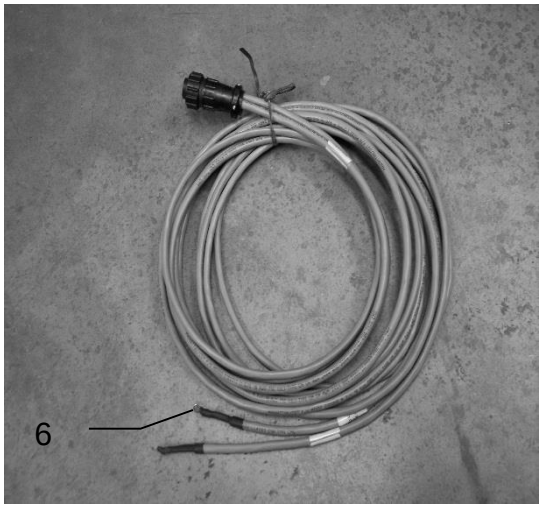

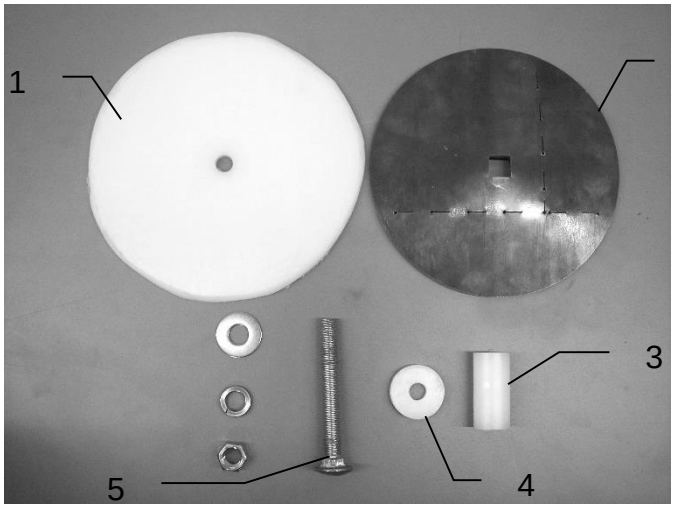

Ref#	Description	Part #	Qty
1	Plastic Pad	006-4641F	2
2	Moisture Disc	006-4641H	2
3	Plastic Bushing	006-4641G	2
4	Plastic Isolator	006-4641I	2
5	1/2X4 1/2” Carriage Bolt		2
6	Moisture Cable	006-4640G	1
1-5	Moisture Pad Assembly	030-4643	2

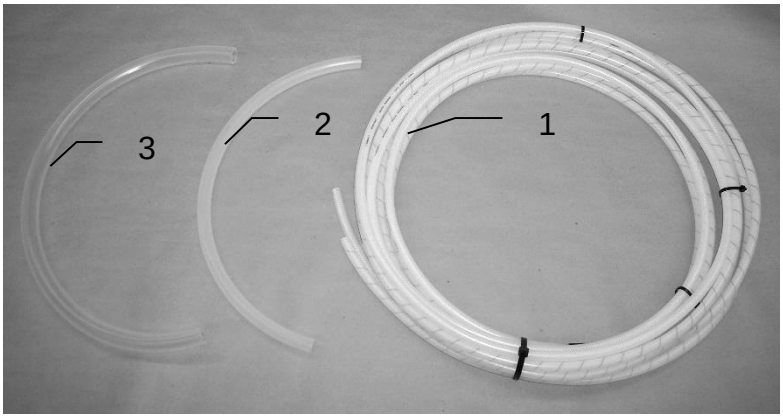

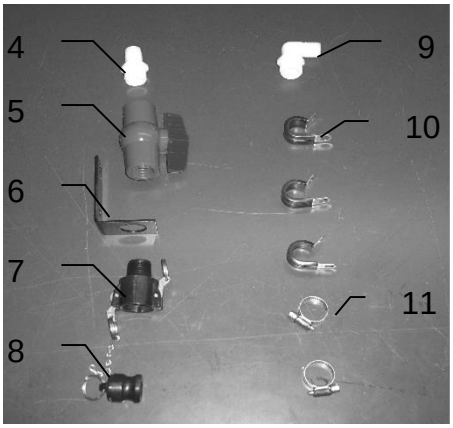

Ref	Description	Part#	Qty
1	Triple weld hose (from pumps to tips)	002-9016	15ft
		002-9016B	15ft
		002-9016G	15ft
	Hose assembly (3 hose assembly)	030-9016RB	1
2	1/2” Hose (tank to filter)	002-9001	6ft
3	3/4” hose (drain/fill line)	002-9002	6ft
4	Straight fitting	003-A3434	1
5	Ball valve	002-2200	1

Ref	Description	Part#	Qty
6	Valve holder	001-6702H	1
7	Female coupler	002-2204A	1
8	Male coupler	002-2205G	1
9	Elbow	003-EL3434	1
10	Jiffy Clip	008-9010	3
11	Hose clamp	003-9004	2

Parts Breakdown for Control Box and Wiring Harnesses

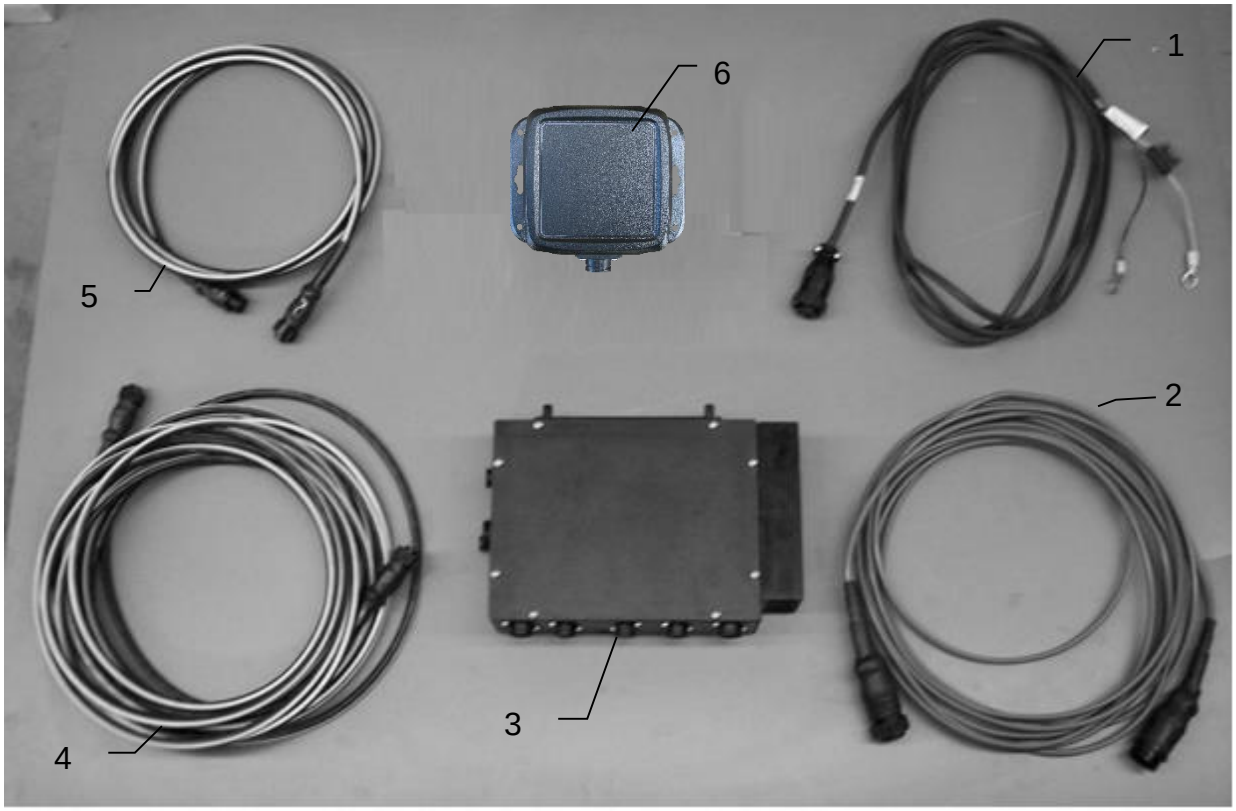

Ref	Description	Part #	Qty
1	Power lead tractor	006-4640A	1
2	Power lead baler	006-4660R	1
3	Baler mounted processor	006-4671RB	1
4	Communication harness (baler)	006-4660S	1
5	Communication harness (tractor)	006-4660N	1
6	400 Series Bluetooth Receiver	030-4672A	1
NP	Optional Touch Screen Display	006-4670	

437-SO Installation Kit

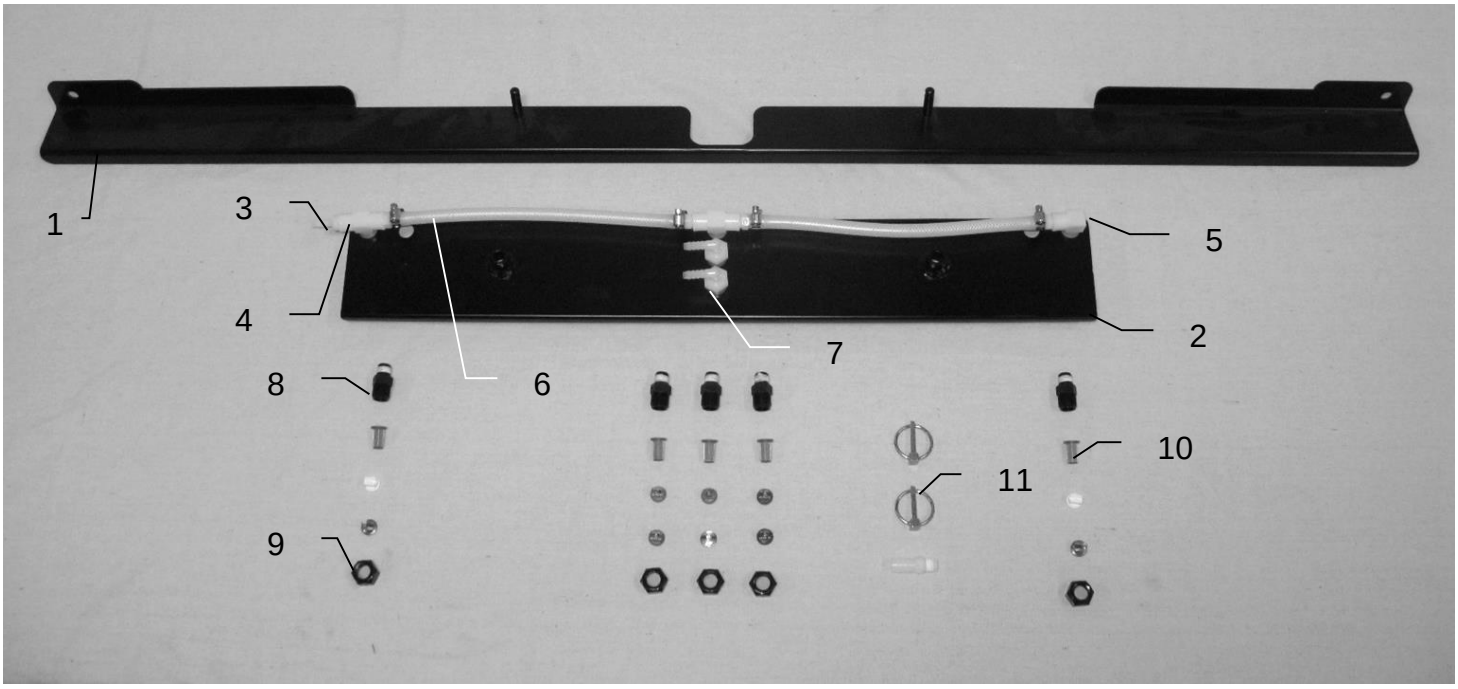

Ref	Description	Part#	Qty	Description	Part#	Qty
1	Shield holder	001-4704E2	1	Tip – Low – Silver	004-650033-SS	3
2	Spray shield	001-4703GK	1	Tip – Low – Green	004-XR110015VS	1
3	Straight fitting	003-A1414	5	Tip – Low – Red	004-XR11004VS	1
4	Tee	003-TT14	3	Tip – High – White	004-650050-PT	2
5	Plug	003-F14	1	Tip – High – Orange	004-XR11001VS	1
6	Hose	002-9016	3	Tip – High – Blue	004-XR11003VS	1
7	Elbow	003-EL1414F	2	Tip – High – Grey	004-XR11006VS	1
8	Nozzle body	003-4722	5			
9	Nozzle cap	003-4723	5			
10	Tip strainer	004-4213-200	5			
11	Lynch pin	008-4576	2			

WARRANTY AND LIABILITY AGREEMENT

Harvest Tec, Inc. will repair or replace components that are found to be defective within 12 months from the date of manufacture. Under no circumstances does this warranty cover any components which in the opinion of Harvest Tec, Inc. have been subjected to negligent use, misuse, alteration, accident, or if repairs have been made with parts other than those manufactured and obtainable from Harvest Tec, Inc.

Our obligation under this warranty is limited to repairing or replacing free of charge to the original purchaser any part that in our judgment shows evidence of defective or improper workmanship, provided the part is returned to Harvest Tec, Inc. within 30 days of the failure. Parts must be returned through the selling dealer and distributor, transportation charges prepaid.

This warranty shall not be interpreted to render Harvest Tec, Inc. liable for injury or damages of any kind, direct, consequential, or contingent, to persons or property. Furthermore, this warranty does not extend to loss of crop, losses caused by delays or any expense prospective profits or for any other reason. Harvest Tec, Inc. shall not be liable for any recovery greater in amount than the cost or repair of defects in workmanship.

There are no warranties, either expressed or implied, of merchantability or fitness for particular purpose intended or fitness for any other reason.

This warranty cannot guarantee that existing conditions beyond the control of Harvest Tec, Inc. will not affect our ability to obtain materials or manufacture necessary replacement parts.

Harvest Tec, Inc. reserves the right to make design changes, improve design, or change specifications, at any time without any contingent obligation to purchasers of machines and parts previously sold.

Note: The warranty registration card supplied with the installation manual must be filled out and returned to the manufacturer within fifteen days of purchase. Without record of receipt of warranty registration at the manufacturer, the warranty is not valid.

Revised 02/01/2012

HARVEST TEC, INC.
P.O. BOX 63
2821 HARVEY STREET
HUDSON, WI 54016 USA
PHONE: 715-386-9100
FAX: 715-381-1792
Email: info@harvesttec.com