Distributed by:

JAMECO® ELECTRONICS

www.Jameco.com ✦ 1-800-831-4242

The content and copyrights of the attached material are the property of its owner.

Jameco Part Number 1028312

FAIRCHILD SEMICONDUCTOR®

April 2006

NC7WZ17

TinyLogic® UHS Dual Buffer with Schmitt Trigger Inputs

General Description

The NC7WZ17 is a dual buffer with Schmitt trigger inputs from Fairchild's Ultra High Speed Series of TinyLogic® in the SC70 6-lead package. The device is fabricated with advanced CMOS technology to achieve ultra high speed with high output drive while maintaining low static power dissipation over a very broad V_{CC} operating range. The device is specified to operate over the 1.65V to 5.5V V_{CC} range. The inputs and outputs are high impedance when V_{CC} is 0V. Inputs tolerate voltages up to 7V independent of V_{CC} operating voltage. Schmitt trigger inputs typically achieve 1V hysteresis between the positive going and negative going input threshold voltage at 5V V_{CC}.

Features

- Space saving SC70 6-lead package
- Ultra small MicroPak™ Pb-Free leadless package
- Ultra high speed: t_{PD} 3.6ns Typ into 50pF at 5V V_{CC}
- High Output Drive: ±24mA at 3V V_{CC}
- Broad V_{CC} operating range: 1.65V to 5.5V
- Matches the performance of LCX when operated at 3.3V V_{CC}
- Power down high impedance inputs/outputs
- Overvoltage tolerant inputs facilitate 5V to 3V translation
- Patented noise/EMI reduction circuitry implemented

Ordering Information

Order Number	Package Number	Package Code Top Mark	Package Description	Supplied As
NC7WZ17P6X	MAA06A	Z17	6-Lead SC70, EIAJ SC88, 1.25mm Wide	3k Units on Tape and Reel
NC7WZ17P6X_NL(1)	MAA06A	Z17	Pb-Free 6-Lead SC70, EIAJ SC88, 1.25mm Wide	3k Units on Tape and Reel
NC7WZ17L6X	MAC06A	B5	Pb-Free 6-Lead MicroPak, 1.0mm Wide	5k Units on Tape and Reel

Pb-Free package per JEDEC J-STD-020B.

Note:

1. "_NL" indicates Pb-Free product (per JEDEC J-STD-020B). Device is available in Tape and Reel only.

Logic Symbol

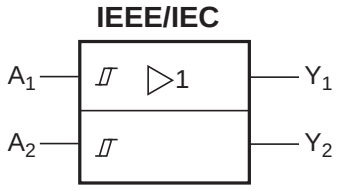

TinyLogic® is a registered trademark of Fairchild Semiconductor Corporation.
MicroPak™ is a trademark of Fairchild Semiconductor Corporation.

©2006 Fairchild Semiconductor Corporation

Connection Diagrams

Pin Assignment for SC70

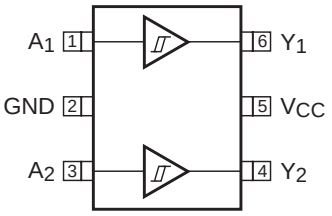

(Top View)

Pin One Orientation Diagram

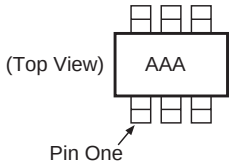

AAA represents Product Code Top Mark – see ordering code

Note: Orientation of Top Mark determines Pin One location. Read the top product code mark left to right, Pin One is the lower left pin (see diagram).

Pad Assignments for MicroPak

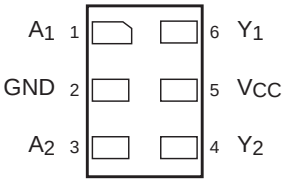

(Top Through View)

Pin Descriptions

Pin Name	Description
A_1, A_2	Data Inputs
Y_1, Y_2	Outputs

Function Table

Y = A

Input	Output
A	**Y**
L	L
H	H

H = HIGH Logic Level L = LOW Logic Level

Absolute Maximum Ratings

The "Absolute Maximum Ratings" are those values beyond which the safety of the device cannot be guaranteed. The device should not be operated at these limits. The parametric values defined in the Electrical Characteristics tables are not guaranteed at the absolute maximum ratings. The "Recommended Operating Conditions" table will define the conditions for actual device operation.

Symbol	Parameter	Rating
V_{CC}	Supply Voltage	–0.5V to +7V
V_{IN}	DC Input Voltage	–0.5V to +7V
V_{OUT}	DC Output Voltage	–0.5V to +7V
I_{IK}	DC Input Diode Current @ V_{IN} < –0.5V	–50mA
I_{OK}	DC Output Diode Current @ V_{OUT} < –0.5V	–50mA
I_{OUT}	DC Output Current	±50mA
I_{CC}/I_{GND}	DC V_{CC}/GND Current	±100mA
T_{STG}	Storage Temperature	–65°C to +150°C
T_J	Junction Temperature under Bias	150°C
T_L	Junction Lead Temperature (Soldering, 10 seconds)	260°C
P_D	Power Dissipation @ +85°C	180mW

Recommended Operating Conditions(2)

Symbol	Parameter	Rating
V_{CC}	Supply Voltage Operating	1.65V to 5.5V
V_{CC}	Supply Voltage Data Retention	1.5V to 5.5V
V_{IN}	Input Voltage	0V to 5.5V
V_{OUT}	Output Voltage	0V to V_{CC}
T_A	Operating Temperature	–40°C to +85°C
θ_{JA}	Thermal Resistance	350°C/W

Note:

2. Unused inputs must be held HIGH or LOW. They may not float.

DC Electrical Characteristics

Symbol	Parameter	Conditions		V_{CC} (V)	T_A = +25°C Min	+25°C Typ	+25°C Max	-40°C to +85°C Min	-40°C to +85°C Max	Units
V_P	Positive Threshold Voltage			1.65	0.6	1.0	1.4	0.6	1.4	V
				1.8	0.7	1.07	1.5	0.7	1.5	
				2.3	1.0	1.38	1.8	1.0	1.8	
				3.0	1.3	1.74	2.2	1.3	2.2	
				4.5	1.9	2.43	3.1	1.9	3.1	
				5.5	2.2	2.88	3.6	2.2	3.6	
V_N	Netative Threshold Voltage			1.65	0.2	0.5	0.8	0.2	0.8	V
				1.8	0.25	0.56	0.9	0.25	0.9	
				2.3	0.40	0.75	1.15	0.40	1.15	
				3.0	0.6	0.98	1.5	0.6	1.5	
				4.5	1.0	1.42	2.0	1.0	2.0	
				5.5	1.2	1.68	2.3	1.2	2.3	
V_H	Hystersis Voltage			1.65	0.1	0.48	0.9	0.1	0.9	V
				1.8	0.15	0.51	1.0	0.15	1.0	
				2.3	0.25	0.62	1.1	0.25	1.1	
				3.0	0.4	0.76	1.2	0.4	1.2	
				4.5	0.6	1.01	1.5	0.6	1.5	
				5.5	0.7	1.20	1.7	0.7	1.7	
V_{OH}	HIGH Level Output Voltage	$V_{IN} = V_{IH}$	I_{OH} = -100µA	1.65	1.55	1.65		1.55		V
				1.8	1.7	1.8		1.7		
				2.3	2.2	2.3		2.2		
				3.0	2.9	3.0		2.9		
				4.5	4.4	4.5		4.4		
			I_{OH} = -4mA	1.65	1.29	1.52		1.29		
			I_{OH} = -8mA	2.3	1.9	2.14		1.9		
			I_{OH} = -16mA	3.0	2.4	2.75		2.4		
			I_{OH} = -24mA	3.0	2.3	2.62		2.3		
			I_{OH} = -32mA	4.5	3.8	4.13		3.8		
V_{OL}	LOW Level Output Voltage	$V_{IN} = V_{IL}$	I_{OL} = 100µA	1.65		0.0	0.1		0.1	V
				1.8		0.0	0.1		0.1	
				2.3		0.0	0.1		0.1	
				3.0		0.0	0.1		0.1	
				4.5		0.0	0.1		0.1	
			I_{OL} = 4mA	1.65		0.08	0.24		0.24	
			I_{OL} = 8mA	2.3		0.10	0.3		0.3	
			I_{OL} = 16mA	3.0		0.16	0.4		0.4	
			I_{OL} = 24mA	3.0		0.24	0.55		0.55	
			I_{OL} = 32mA	4.5		0.25	0.55		0.55	

DC Electrical Characteristics (Continued)

Symbol	Parameter	Conditions	V_{CC} (V)	T_A = +25°C Min	+25°C Typ	+25°C Max	-40°C to +85°C Min	-40°C to +85°C Max	Units
I_{IN}	Input Leakage Current	V_{IN} = 5.5V, GND	0 to 5.5			±0.1		±1.0	µA
I_{OFF}	Power Off Leakage Current	V_{IN} or V_{OUT} = 5.5V	0.0			1		10	µA
I_{CC}	Quiescent Supply Current	V_{IN} = 5.5V, GND	1.65 to 5.5			1.0		10	µA

AC Electrical Characteristics

Symbol	Parameter	Conditions	V_{CC} (V)	T_A = +25°C Min	+25°C Typ	+25°C Max	–40°C to +85°C Min	–40°C to +85°C Max	Units	Figure Number
t_{PLH}, t_{PHL}	Propagation Delay	C_L = 15pF, R_L = 1MΩ	1.65	2.0	8.3	14.3	2.0	15.8	ns	Figure 1 Figure 3
			1.8	2.0	6.9	11.9	2.0	13.1		
			2.5 ± 0.2	1.5	4.8	8.2	1.5	9.0		
			3.3 ± 0.3	1.0	3.7	5.6	1.0	6.2		
			5.0 ± 0.5	0.8	3.0	4.7	0.8	5.2		
		C_L = 50pF, R_L = 500Ω,	3.3 ± 0.3	1.5	4.3	6.6	1.5	7.3	ns	Figure 1 Figure 3
			5.0 ± 0.5	1.0	3.6	5.6	1.0	6.2		
C_{IN}	Input Capacitance		0		2.5				pF	
C_{PD}	Power Dissipation Capacitance	Note 3	3.3		10				pF	Figure 2
			5.0		12					

Notes:

3. C_{PD} is defined as the value of the internal equivalent capacitance which is derived from dynamic operating current consumption (I_{CCD}) at no output loading and operating at 50% duty cycle. (See Figure 2.) C_{PD} is related to I_{CCD} dynamic operating current by the expression:

$I_{CCD} = (C_{PD})(V_{CC})(f_{IN}) + (I_{CC}static)$.

AC Loading and Waveforms

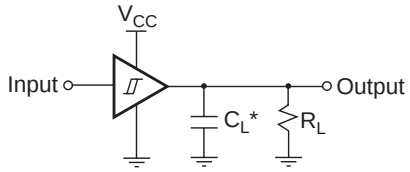

*C_L includes load and stray capacitance.
Input PRR = 1.0MHz; t_W = 500ns

Figure 1. AC Test Circuit

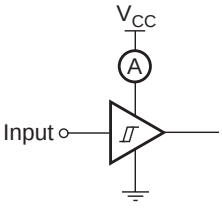

Input = AC Waveform; t_r, t_f = 1.8ns;
PRR = 10MHz; Duty Cycle = 50%

Figure 2. I_{CCD} Test Circuit

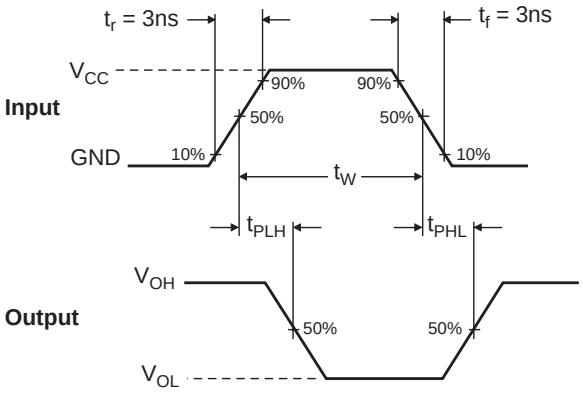

Figure 3. AC Waveforms

Tape and Reel Specification

Tape Format for SC70

Package Designator	Tape Section	Number Cavities	Cavity Status	Cover Tape Status
P6X	Leader (Start End)	125 (typ)	Empty	Sealed
	Carrier	3000	Filled	Sealed
	Trailer (Hub End)	75 (typ)	Empty	Sealed

Tape Dimension inches (millimeters)

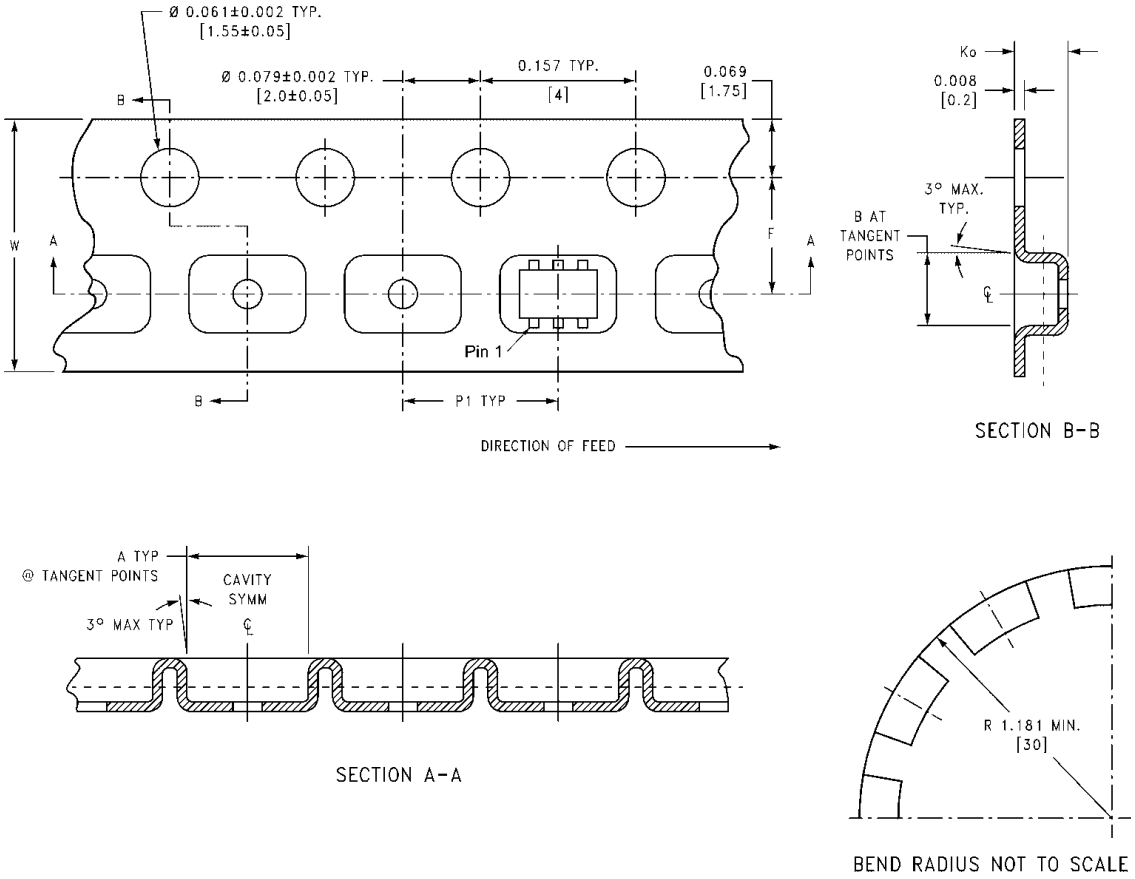

Package	Tape Size	Dim A	Dim B	Dim F	Dim K_O	Dim P1	Dim W
SC70-6	8mm	0.093 (2.35)	0.096 (2.45)	0.138 ± 0.004 (3.5 ± 0.10)	0.053 ± 0.004 (1.35 ± 0.10)	0.157 (4)	0.315 ± 0.004 (8 ± 0.1)

Tape and Reel Specification (Continued)

Reel Dimension for MicroPak inches (millimeters)

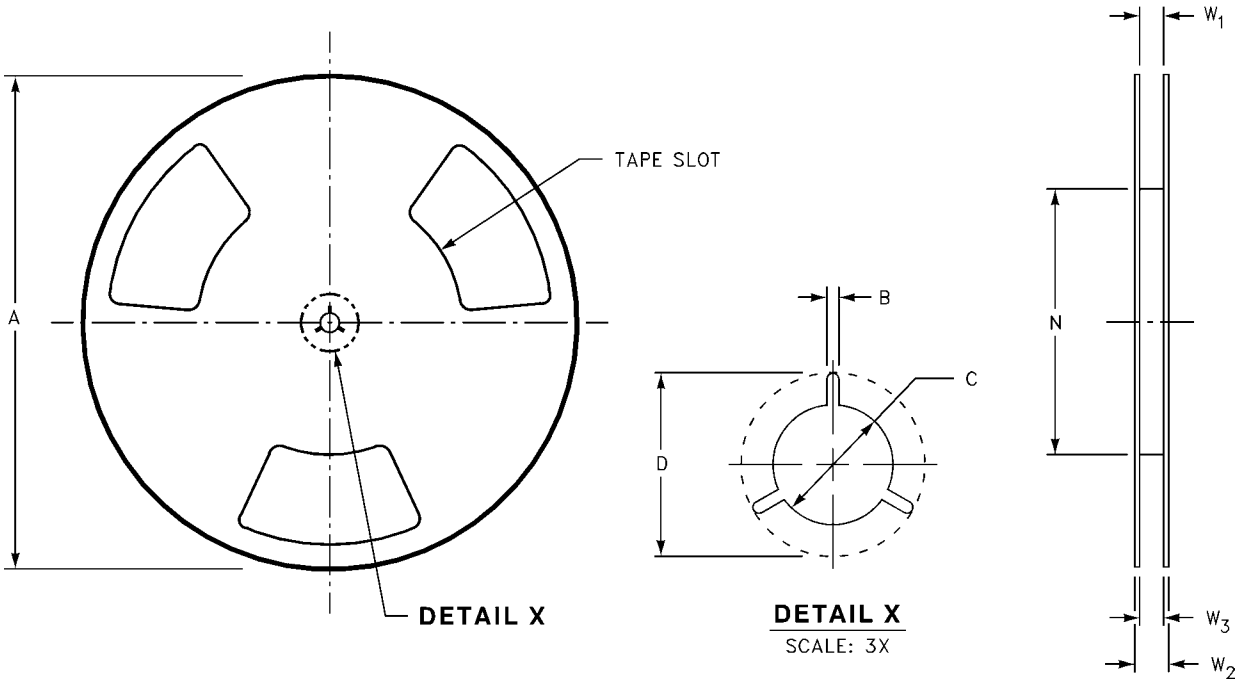

Tape Size	A	B	C	D	N	W1	W2	W3
8 mm	7.0 (177.8)	0.059 (1.50)	0.512 (13.00)	0.795 (20.20)	2.165 (55.00)	0.331 + 0.059/–0.000 (8.40 + 1.50/–0.00)	0.567 (14.40)	W1 + 0.078/–0.039 (W1 + 2.00/–1.00)

Tape and Reel Specification (Continued)

Tape Format for MicroPak

Package Designator	Tape Section	Number Cavities	Cavity Status	Cover Tape Status
L6X	Leader (Start End)	125 (typ)	Empty	Sealed
	Carrier	3000	Filled	Sealed
	Trailer (Hub End)	75 (typ)	Empty	Sealed

Tape Dimension inches (millimeters)

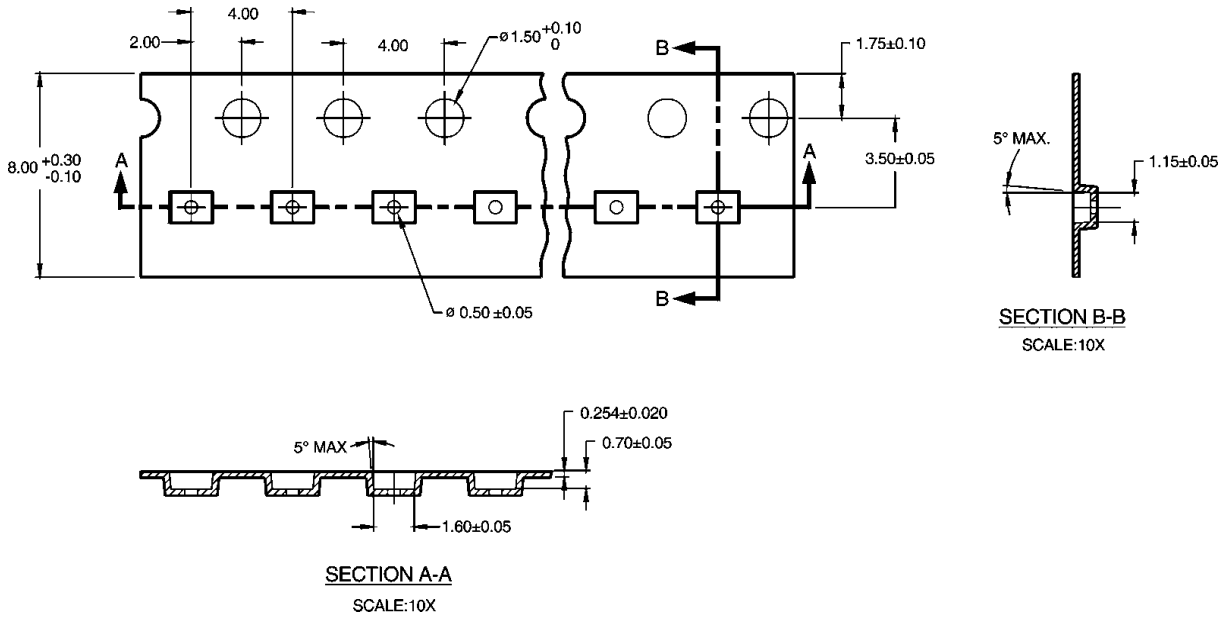

Physical Dimensions inches (millimeters) unless otherwise noted

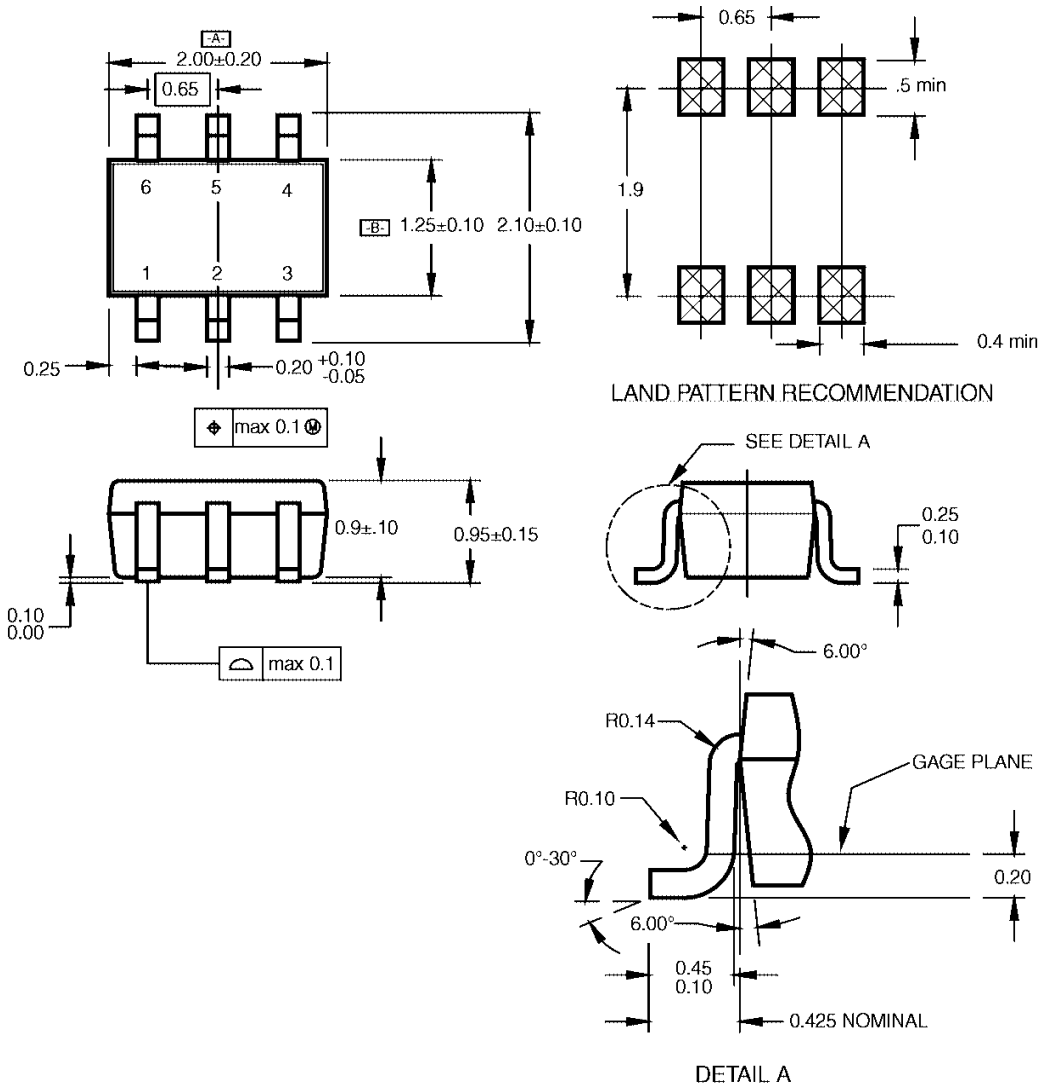

NOTES:

A. CONFORMS TO EIAJ REGISTERED OUTLINE DRAWING SC88.
B. DIMENSIONS DO NOT INCLUDE BURRS OR MOLD FLASH.
C. DIMENSIONS ARE IN MILLIMETERS.

MAA06ARevC

6-Lead SC70, EIAJ SC88, 1.25mm Wide
Package Number MAA06A

Physical Dimensions inches (millimeters) unless otherwise noted (Continued)

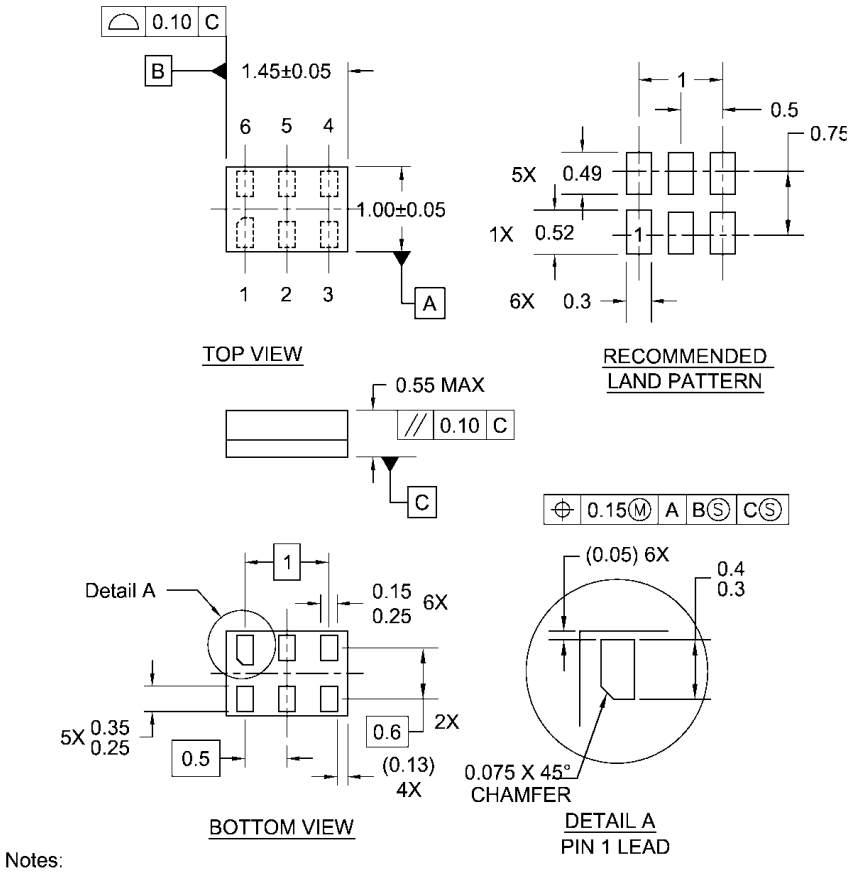

Notes:

1. JEDEC PACKAGE REGISTRATION IS ANTICIPATED
2. DIMENSIONS ARE IN MILLIMETERS
3. DRAWING CONFORMS TO ASME Y14.5M-1994

MAC06ARevB

Pb-Free 6-Lead MicroPak, 1.0mm Wide
Package Number MAC06A

TRADEMARKS

The following are registered and unregistered trademarks Fairchild Semiconductor owns or is authorized to use and is not intended to be an exhaustive list of all such trademarks.

ACEx™ ActiveArray™ Bottomless™ Build it Now™ CoolFET™ *CROSSVOLT*™ DOME™ EcoSPARK™ E^2CMOS™ EnSigna™ FACT™ FACT Quiet Series™ FAST® FASTr™ FPS™ FRFET™ GlobalOptoisolator™ GTO™ HiSeC™ I^2C™ *i-Lo*™ ImpliedDisconnect™ IntelliMAX™ ISOPLANAR™ LittleFET™ MICROCOUPLER™ MicroFET™ MicroPak™ MICROWIRE™ MSX™ MSXPro™ OCX™ OCXPro™ OPTOLOGIC® OPTOPLANAR™ PACMAN™ POP™ Power247™ PowerEdge™ PowerSaver™ PowerTrench® QFET® QS™ QT Optoelectronics™ Quiet Series™ RapidConfigure™ RapidConnect™ µSerDes™ ScalarPump™ SILENT SWITCHER® SMART START™ SPM™ Stealth™ SuperFET™ SuperSOT™-3 SuperSOT™-6 SuperSOT™-8 SyncFET™ TCM™ TinyLogic® TINYOPTO™ TruTranslation™ UHC™ UltraFET® UniFET™ VCX™ Wire™

Across the board. Around the world.™
The Power Franchise®
Programmable Active Droop™

DISCLAIMER

FAIRCHILD SEMICONDUCTOR RESERVES THE RIGHT TO MAKE CHANGES WITHOUT FURTHER NOTICE TO ANY PRODUCTS HEREIN TO IMPROVE RELIABILITY, FUNCTION OR DESIGN. FAIRCHILD DOES NOT ASSUME ANY LIABILITY ARISING OUT OF THE APPLICATION OR USE OF ANY PRODUCT OR CIRCUIT DESCRIBED HEREIN; NEITHER DOES IT CONVEY ANY LICENSE UNDER ITS PATENT RIGHTS, NOR THE RIGHTS OF OTHERS.

LIFE SUPPORT POLICY

FAIRCHILDíS PRODUCTS ARE NOT AUTHORIZED FOR USE AS CRITICAL COMPONENTS IN LIFE SUPPORT DEVICES OR SYSTEMS WITHOUT THE EXPRESS WRITTEN APPROVAL OF FAIRCHILD SEMICONDUCTOR CORPORATION.
As used herein:

1. Life support devices or systems are devices or systems which, (a) are intended for surgical implant into the body, or (b) support or sustain life, or (c) whose failure to perform when properly used in accordance with instructions for use provided in the labeling, can be reasonably expected to result in significant injury to the user.

2. A critical component is any component of a life support device or system whose failure to perform can be reasonably expected to cause the failure of the life support device or system, or to affect its safety or effectiveness.

PRODUCT STATUS DEFINITIONS

Definition of Terms

Datasheet Identification	Product Status	Definition
Advance Information	Formative or In Design	This datasheet contains the design specifications for product development. Specifications may change in any manner without notice.
Preliminary	First Production	This datasheet contains preliminary data, and supplementary data will be published at a later date. Fairchild Semiconductor reserves the right to make changes at any time without notice in order to improve design.
No Identification Needed	Full Production	This datasheet contains final specifications. Fairchild Semiconductor reserves the right to make changes at any time without notice in order to improve design.
Obsolete	Not In Production	This datasheet contains specifications on a product that has been discontinued by Fairchild semiconductor. The datasheet is printed for reference information only.

Rev. I18