ICAO

Doc 9157

Aerodrome Design Manual

Second Edition, 2017

Part 5 — Electrical Systems

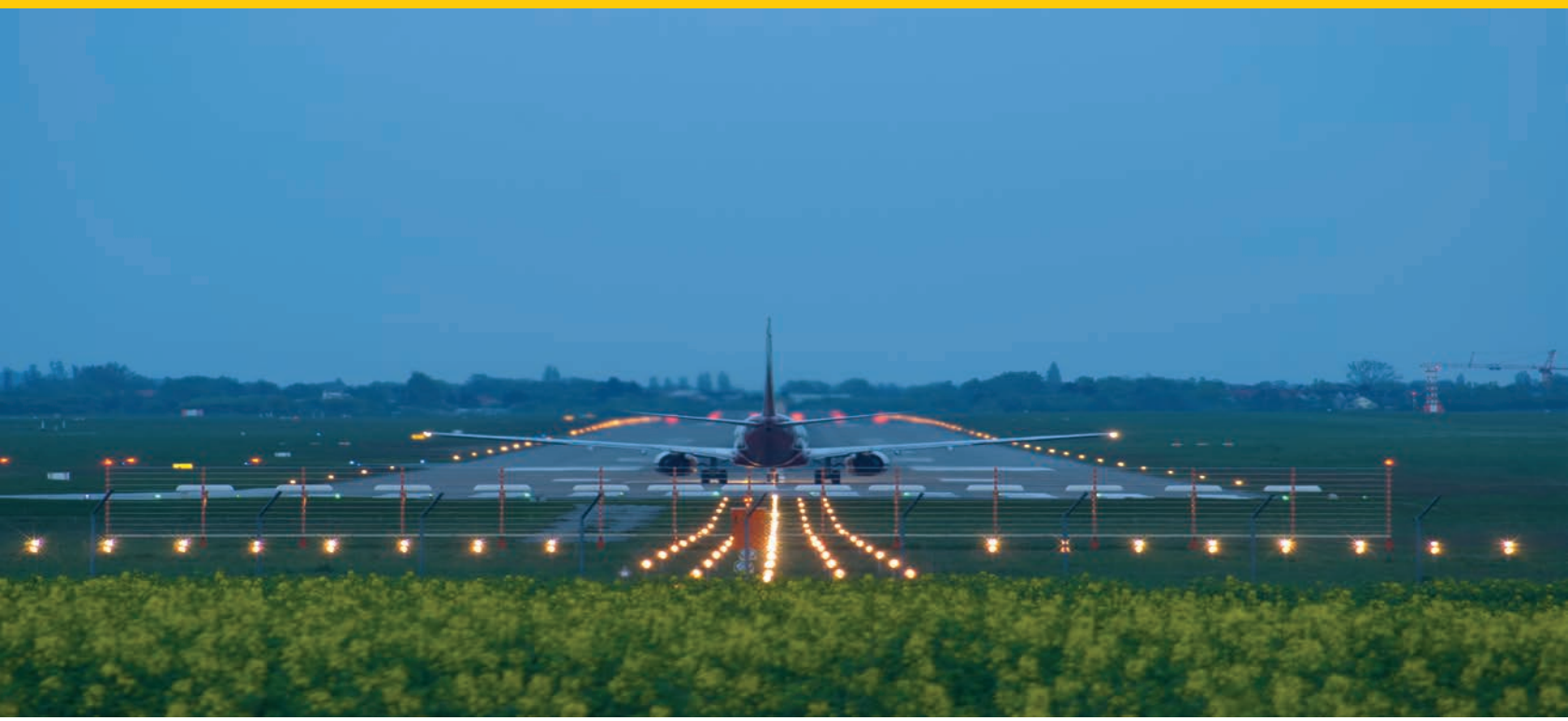

Approved by and published under the authority of the Secretary General

INTERNATIONAL CIVIL AVIATION ORGANIZATION

ICAO

Doc 9157

Aerodrome Design Manual

Second Edition, 2017

Part 5 — Electrical Systems

Approved by and published under the authority of the Secretary General

INTERNATIONAL CIVIL AVIATION ORGANIZATION

Published in separate English, Arabic, Chinese, French, Russian
and Spanish editions by the
INTERNATIONAL CIVIL AVIATION ORGANIZATION
999 Robert-Bourassa Boulevard, Montréal, Quebec, Canada H3C 5H7

For ordering information and for a complete listing of sales agents
and booksellers, please go to the ICAO website at www.icao.int

First edition 1983
Second edition 2017

Doc 9157, *Aerodrome Design Manual — Part 5, Electrical systems*
Order Number: 9157P5
ISBN 978-92-9258-246-3

© ICAO 2017

All rights reserved. No part of this publication may be reproduced, stored in a retrieval system or transmitted in any form or by any means, without prior permission in writing from the International Civil Aviation Organization.

AMENDMENTS

Amendments are announced in the supplements to the *Products and Services Catalogue;* the Catalogue and its supplements are available on the ICAO website at www.icao.int. The space below is provided to keep a record of such amendments.

RECORD OF AMENDMENTS AND CORRIGENDA

AMENDMENTS		
No.	Date	Entered by

CORRIGENDA		
No.	Date	Entered by

FOREWORD

Proper design, installation and maintenance of electrical systems for visual navigation aids, are prerequisites for the safety, regularity, and efficiency of civil aviation. To this end, this manual provides guidance on the design and installation of electrical systems for aerodrome lighting.

The electrical systems for aerodrome lighting include features which are not usually involved in other electrical installations. This manual therefore examines not only the general features of electrical practices and installations, but also those features which are of special significance for aerodrome installations. It is assumed that readers of the manual will be familiar with electrical circuits and general design concepts, but may not be knowledgeable of certain features of aerodrome installations which are less frequently encountered in other installations. It is important to note that the material presented in this manual is intended to complement national safety codes related to electrical installations.

This manual does not examine electrical systems for buildings located at an airport. Similarly, this manual does not deal with the maintenance of electrical systems. For guidance on this latter issue, the reader is advised to refer to the *Airport Services Manual* (Doc 9137), Part 9 — *Airport Maintenance Practices*.

Furthermore, this manual does not examine radio navigational aids. Guidance on the design and the installation of electrical systems for these aids will be developed at a later date.

IMPLEMENTATION

The material herein is intended to provide assistance to States for implementation of Annex 14 — *Aerodromes*, Volume I — *Aerodrome Design and Operations*, specifications and thereby help to ensure their uniform application. However, the designer should be aware that local electrical codes may take precedence.

FUTURE DEVELOPMENTS

In order to keep this manual relevant and accurate, suggestions for improving it in terms of format, content or presentation are welcome. Any such recommendation or suggestion will be examined and, if found suitable, will be included in regular updates to the manual. Regular revision will ensure that the manual remains both pertinent and accurate. Comments on this manual should be addressed to:

The Secretary General
International Civil Aviation Organization
999 Robert-Bourassa Boulevard
Montréal, Québec H3C 5H7
Canada

The next edition of this manual will include recommendations of, and be in-line with, the future IEC 61820 Standard (system design and installation requirements for constant current series circuits for aeronautical ground lighting, expected for 2018).

TABLE OF CONTENTS

		Page
Publications		(xiii)
Abbreviations and acronyms		(xv)
Chapter 1.	**Introduction**	**1-1**
1.1	Purpose	1-1
1.2	Organization of the manual	1-1
Chapter 2.	**Methods of obtaining integrity and reliability**	**2-1**
2.1	Definitions of terms	2-1
2.2	Summary of means of improving integrity and reliability	2-1
Chapter 3.	**Electricity supplies**	**3-1**
3.1	General	3-1
3.2	Sources of power to the aerodrome commercial/public power source	3-1
3.3	Power supply to aerodrome visual aids	3-2
3.4	Uninterruptible power supply	3-4
3.5	Equipment	3-8
3.6	Vaults and shelters for electrical equipment	3-11
Chapter 4.	**Distribution of power**	**4-1**
4.1	General	4-1
4.2	Primary power feeder circuits	4-1
4.3	Above ground (overhead) primary distribution systems	4-1
4.4	Line-voltage regulators	4-3
4.5	Power lines	4-3
4.6	Line support materials	4-3
4.7	Conductors	4-4
4.8	Transformers	4-4
4.9	Circuit interruption devices	4-5
4.10	Lightning protection	4-6
4.11	Clearances	4-7
4.12	Grounding	4-8
4.13	Underground distribution systems	4-9

Page

Chapter 5. Types of electrical circuits **5-1**

5.1 Electrical characteristics 5-1
5.2 Series circuits 5-1
5.3 Parallel (multiple) circuits 5-3
5.4 Comparison of series and parallel lighting circuits 5-5
5.5 Series circuitry for aerodrome lighting 5-5
5.6 Grounding 5-5
5.7 Step-down transformers 5-6
5.8 Series cut-out 5-6

Chapter 6. Circuitry **6-1**

6.1 Interleaving of aerodrome lighting circuits 6-1
6.2 Arrangement in the electrical vault 6-1
6.3 Provision of interleaving 6-1
6.4 Possible provision of interleaving 6-6
6.5 Selective switching of taxiway circuits 6-8

Chapter 7. Constant current regulators **7-1**

7.1 Types of constant current regulators 7-1
7.2 Operating characteristics of constant current regulators 7-7
7.3 Rating characteristics of constant current regulators 7-7
7.4 Open circuit and over-current protection 7-9

Chapter 8. Load calculations/regulator sizing **8-1**

8.1 General 8-1
8.2 Types of loading 8-1
8.3 Calculation of lighting facility load 8-3
8.4 Sample calculation 8-3
8.5 Other considerations 8-5

Chapter 9. Aerodrome ground lighting series transformers **9-1**

9.1 Functions 9-1
9.2 Transformer design 9-2
9.3 Enclosure 9-2
9.4 Ambient temperature 9-2
9.5 Transformer ratings 9-2
9.6 Several lamps from a single transformer 9-3
9.7 Effects of open circuited secondaries of transformers 9-3
9.8 Lamp by-pass devices 9-3
9.9 Transformer stand 9-4
9.10 Other devices 9-4

Page

Chapter 10. Control and monitoring of aerodrome lighting systems 10-1

10.1 Apron control panel 10-2
10.2 Control circuitry 10-2
10.3 Types of remote control systems 10-2
10.4 Transfer relay panel 10-10
10.5 Use of relays 10-12
10.6 Interconnection of controls 10-12
10.7 Automatic controls 10-14
10.8 Addressable lights 10-14
10.9 Response time 10-15
10.10 Monitoring of aerodrome lighting circuits 10-15
10.11 Classes of monitors 10-16
10.12 Monitor override controls 10-16
10.13 Insulation resistance monitoring system 10-17
10.14 Aircraft radio control of aerodrome lighting (ARCAL) 10-17

Chapter 11. Incandescent and gaseous discharge lamps 11-1

11.1 Incandescent lamps 11-1
11.2 Gaseous discharge lamps 11-4

Chapter 12. Solid state technology 12-1

12.1 Introduction 12-1
12.2 Light emitting diodes (LED) light units 12-1
12.3 Colour — CIE S 004/E-2001 12-1
12.4 Limiting selection for shades of green 12-3
12.5 Infrastructure — series circuit 12-3
12.6 Pulse width modulation 12-6
12.7 Infrastructure — parallel circuit 12-6
12.8 Alternate infrastructure 12-6
12.9 Brightness settings 12-8
12.10 LED lighting and night vision systems 12-13
12.11 Line lighting 12-14
12.12 Mixing technologies 12-14
12.13 Heaters 12-22
12.14 Maintenance 12-22

Chapter 13. Underground electrical systems 13-1

13.1 General 13-1
13.2 Direct burial of cables 13-6
13.3 Installation of ducts/conduits (without or with concrete encasement) 13-16
13.4 Manholes and handholes 13-20
13.5 Installation of underground cables in ducts 13-22
13.6 Direct burial of AGL transformers 13-30
13.7 Transformer housings/light bases 13-31
13.8 Shallow light base installation 13-34

Page

Chapter 14. Cables for underground service at aerodromes 14-1

14.1 Characteristics of cables for underground service 14-1
14.2 Cable sheaths 14-2
14.3 Cable coverings 14-3
14.4 Shielded cables 14-3
14.5 Cable fireproofing 14-3
14.6 Protection against corona damage 14-3
14.7 Cable conductors 14-3
14.8 Health and environmental Issues 14-4
14.9 Classes of service 14-4
14.10 Ground wires 14-7
14.11 Causes of cable damage 14-7
14.12 Cable connections 14-9
14.13 Connector kits for aerodrome lighting 14-13
14.14 Connection of conductors 14-13

Chapter 15. Acceptance and maintenance testing 15-1

15.1 Application 15-1
15.2 Guarantee period 15-1
15.3 Inspection procedures 15-1
15.4 Cable, connectors and isolating transformer inspection 15-1
15.5 Constant current regulator inspection 15-2
15.6 Light fixture and beacon inspection 15-2
15.7 Inspection of miscellaneous components 15-2
15.8 System operation test 15-3
15.9 Electrical tests of series-circuit equipment 15-3
15.10 Electrical tests of other cables 15-5
15.11 Electrical tests of regulators 15-6
15.12 Electrical tests of other equipment 15-7
15.13 Tests of monitoring system 15-7

Chapter 16. Troubleshooting procedures 16-1

16.1 General 16-1
16.2 Safety 16-1
16.3 Initial fault investigation 16-1
16.4 Locating ground faults in the field 16-5
16.5 Locating open circuit faults 16-8
16.6 Interconnected circuit faults 16-9
16.7 Intentional ground test 16-12
16.8 Grounded output test for locating open circuits 16-15
16.9 Using heat sensing equipment to locate ground faults 16-16
16.10 Using cable fault locating equipment to locate ground faults 16-16

Page

Chapter 17. Electrical test equipment..... 17-1

17.1 General..... 17-1
17.2 Volt-ohm-milliammeter (VOM)..... 17-1
17.3 Digital multimeter (DMM)..... 17-2
17.4 Insulation resistance tester (megohmmeter)..... 17-2
17.5 Insulation resistance test..... 17-3
17.6 Underground cable/fault locator..... 17-5
17.7 High-resistance fault locator..... 17-6
17.8 Clamp-on ammeter..... 17-7
17.9 Cable route tracer..... 17-7
17.10 Impulse generator/proof tester..... 17-8
17.11 Acoustic detector..... 17-9
17.12 Directional detector..... 17-9
17.13 Ground resistance tester..... 17-10

PUBLICATIONS

(referred to in this manual)

International Civil Aviation Organization (ICAO)

Annex 14 — *Aerodromes*, Volume I — *Aerodrome Design and Operations*

Airport Services Manual (Doc 9137), Part 9 — *Airport Maintenance Practices*

Airport Design Manual (Doc 9157), Part 4 — *Visual Aids*

International Electrotechnical Commission (IEC)

IEC 60228, *Conductors of insulated cables*

IEC 60364, *Low-voltage electrical installations*

IEC 61000, *Electromagnetic compatibility (EMC)*

IEC 61024-1, *Protection of structures against lightning — Part 1: General principles,* (Protection of structures against fire, explosion and life hazards)

IEC 61140, *Protection against electric shock — Common aspects for installation and equipment*

IEC 61200-52, *Electrical installation guide — Part 52: Selection and erection of electrical equipment — Wiring systems*

IEC 61820, *Electrical installations for lighting and beaconing of aerodromes — Constant current series circuits for aeronautical ground lighting: System design and installation requirements*

IEC 61821, *Electrical installations for lighting and beaconing of aerodromes — Maintenance of aeronautical ground lighting constant current series circuits*

IEC 61822, *Electrical installations for lighting and beaconing of aerodromes — Constant current regulators*

IEC 61823, *Electrical installations for lighting and beaconing of aerodromes — AGL series transformers*

IEC 62144, *Electrical installations for lighting and beaconing of aerodromes — Technical requirements for Aeronautical Ground Lighting (AGL) control and monitoring systems*

IEC 62294, *Aeronautical ground lighting electrical installation prestandard — Connecting devices — Equipment specifications and tests*

IEC TS 61827, *Electrical installations for lighting and beaconing of aerodromes — Characteristics of inset and elevated luminaires used on aerodromes and heliports*

IEC TS 62143, *Electrical installations for lighting and beaconing of aerodromes — Aeronautical ground lighting systems — Guidelines for the development of a safety lifecycle methodology*

IEC 60664-1, Insulation coordination for equipment within low-voltage systems — Part 1: Principles, requirements and tests

IEC 60364-4-44, *Low-voltage electrical installations — Part 4-44: Protection for safety — Protection against voltage disturbances and electromagnetic disturbances*

IEC 60332-3-24, *Tests on electric and optical fibre cables under fire conditions — Part 3-24: Test for vertical flame spread of vertically-mounted bunched wires or cables — Category C*

IEC 60754-1, *Test on gases evolved during combustion of materials from cables — Part 1: Determination of the halogen acid gas content*

IEC 60754-2, *Test on gases evolved during combustion of materials from cables — Part 2: Determination of acidity (by pH measurement) and conductivity*

IEC 61034, *Measurement of smoke density of cables burning under defined conditions — Part 1: Test apparatus*

IEC 61400-24, *Wind turbines — Part 24: Lightning protection — Part 2: Test procedure and requirements*

European Commission (EC)

Directive 2011/65/EU, *Directive on the restriction of the use of certain hazardous substances in electrical and electronic equipment*

Directive 2002/96/EC, *Directive on waste electrical and electronic equipment (WEEE)*

Commission Internationale de l'Éclairage (CIE)

CIE S 004/E-2001, *Colour of Light Signals*

CIE 2.2-1975, *Colours of Light Signals*

Other documents

ANSI/IEEE Std 81-1983, *IEEE Guide for Measuring Earth Resistivity, Ground Impedance, and Earth Surface Potentials of a Ground System*

Alliance for Solid-State Illumination Systems and Technologies (ASSIST). *ASSIST recommends: LED Life for General Lighting*. Volume 1, Issues 1-7. Troy, NY: Lighting Research Center.

ABBREVIATIONS AND ACRONYMS

AC	Alternating current
ACMU	Addressable control and monitoring unit
AGL	Above ground level
AGL	Aerodrome ground lighting
ALCS	Aerodrome lighting computer system
ANVIS/NVG	Aviators night vision imaging system/night vision goggles
ARCAL	Aircraft radio control of aerodrome lighting
AT-VASI	Abbreviated T visual approach slope indicator system
CCR	Constant current regulator
CIE	Commission Internationale de l'Éclairage
CTAF	Common traffic advisory frequency
DMM	Digital multimeter
DSP	Digital signal processor
DSP	Domain-specific port
EMC	Electromagnetic compatibility
EMI	Electromagnetic interference
EPR	Engine pressure ratio
EPR	Ethylene-propylene rubber
FEC	Field electric centre
FEC	Forward error correction
FLIR	Forward-looking infrared radar
HMI	Human-machine interface
HUD	Head-up display
IEC	International Electrotechnical Commission
IFR	Instrument flight rules
IGBT	Insulated gate bipolar transistors
ILS	Instrument landing system
IPU	Interruptible power unit
IR	Infrared
IRC	Infrared coated
LDT	Load disconnect and test
LED	Light emitting diode
LPS	Lightning protection system
MCP	Microchannel plate
MCP	Mode control panel
MDT	Mean down time
MR	Multifaceted reflector
MTBF	Mean time between failures
PAPI	Precision approach path indicator
PCB	Polychlorinated biphenyls
PM	Preventive maintenance
PPE	Personal protective equipment
PUR	Polyurethane
PVC	Polyvinyl chloride
PWM	Pulse width modulation
RETIL	Rapid exit taxiway indicator lights

RF	Radio frequency
RGL	Runway guard lights
RMS	Root-mean-square
RTIL	Runway threshold identification lights
RUPU	Rotary uninterruptible power unit
RVR	Runway visual range
RWSL	Runway status light
SAW	Surface acoustical wave
SCR	Silicon controlled rectifier, a.k.a. thyristor
SMGCS	Surface movement guidance and control system
SUPU	Static uninterruptible power unit
TPE	Thermo-plastic elastomer
UPS	Uninterruptible power supply
VA	Volt-ampere
VASI	Visual approach slope indicator
VOM	Volt-ohm-milliammeter/Volt-ohm-meter
XLP	Cross-linked polyethylene

Chapter 1

INTRODUCTION

1.1 PURPOSE

1.1.1 To ensure the safety of aviation, it is necessary that aerodrome lighting has a high level of integrity and reliability. It is considered that the probability of failure of well-designed and maintained lighting at a critical moment is extremely low.

1.1.2 The following material is intended as a guide to the recommended electrical engineering practices for design and installation of new systems and the modification of existing systems of aerodrome fixed lighting. It does not imply that existing installations, if different, are wrong and should be changed automatically. It does mean that some of the earlier designs adopted are not recommended for repetition since they have been superseded by later designs. Because of the differences in engineering style and equipment in different States, this material is intended to indicate basic design principles. It is not intended to illustrate detailed design or particular pieces of equipment or systems unique to any one State.

1.1.3 The electrical systems for aerodrome visual aids require good quality installations and consideration for features which are not usually involved in other electrical installations. This manual examines the general features of electrical practices and installations with emphasis on those features which are less commonly involved or have special significance for aerodrome operations. It is assumed that those using this manual will be familiar with electrical circuits and general practices, but may not be knowledgeable of certain features of aerodrome series circuit installations, which are less frequently encountered in other electrical systems. Some of these features are that most electrical circuits are installed underground, series circuits are used for most lighting systems, higher reliability is required of the input power sources, and rapid, automatic transfer to secondary power in case of power failures. Each aerodrome is unique, and its electrical installation should be designed to provide economical power and control which is safe, reliable, and easily maintained.

1.2 ORGANIZATION OF THE MANUAL

This manual is organized as follows. Chapters 2 to 14 provide information on the aerodrome electrical systems with respect to design; Chapter 15 deals with acceptance testing of installed systems, and; Chapter 16 and Chapter 17 pertain to troubleshooting procedures for series lighting circuits and the associated test equipment, respectively.

Chapter 2

METHODS OF OBTAINING INTEGRITY AND RELIABILITY

2.1 DEFINITIONS OF TERMS

2.1.1 Perhaps the most important objective for a designer of an aerodrome lighting system is to develop an installation having a high level of integrity and reliability. These terms, however, as applied to aerodrome lighting are not easily defined or measured. Previous efforts to define these terms have concluded that reliability is a question of mean time between failures (MTBF) of components, while integrity pertains to such matters as survival of the overall system after failure. It is considered that visual aids should have a comparable integrity and reliability to that afforded by non-visual aids. Thus, reliability is affected by the selection of components and operational use, and integrity is affected by the design and installation of the systems and maintenance of the equipment. In general, it is considered that well-designed and maintained visual aids facilities have a very high level of integrity and that the probability of a failure occurring at a critical moment is extremely low. Nevertheless, all reasonable efforts should be made to improve upon integrity and reliability.

2.1.2 Electrical factors which affect integrity and reliability may be classified as follows:

a) failure of the circuit;

b) failure of the power supply; and

c) failure of the control circuit.

2.2 SUMMARY OF MEANS OF IMPROVING INTEGRITY AND RELIABILITY

Multiple circuits

2.2.1 A standard practice is to use several circuits so that the failure of one circuit does not result in the loss of an entire lighting system. Four circuits are sometimes employed for approach and threshold lighting: one for the threshold lights and three for the approach lighting system. The latter three circuits are so designed that if one should fail only every third barrette or every third light within a barrette would be out of operation. For runway and taxiway lighting systems, the light fixtures are alternately connected (interleaved) to two installed circuits.

2.2.2 The practice of having each circuit feed a particular geographical section of the lighting pattern is not recommended because loss of one circuit can then reduce the system to less than what is necessary for pilot guidance. For example, an approach lighting system composed of two circuits feeding the first and second portions can, upon failure of one of the circuits, remove a critical half of the system needed during landing. Similarly, provision of two circuits to half segments of a runway will, upon failure, leave the pilot without guidance during the touchdown or roll-out phase of the landing. The objective of using multiple circuits is to maintain an adequate discernible pattern with the occurrence of circuit failure.

Multiple power supplies

2.2.3 The reliability of power supply is obtained through use of an alternative source which is capable of automatically starting in case of a failure of the normal power. Equipment has been developed which will reduce to a very short interval the time between power failure and delivery of current from the alternative system. Switching rates as low as 0.3 to 0.5 seconds are being obtained for equipment installed in conjunction with precision approach runways. Switching rates for other systems vary between 10 to 20 seconds. Another procedure is to operate the secondary generator as the normal supply generator during critical times such as during low visibility conditions or when a storm is forecast. In case of a failure of the generator, the switch over is then made to the primary power supply. These systems and arrangements are examined in Chapter 3.

Alternate control supply

2.2.4 Careful attention is often given to the lighting circuits and their alternate power supplies, but provision of alternate circuits for controls of the lighting systems from the control tower is sometimes overlooked. The probability of a control circuit failing may be equal to that of a lighting circuit failing, and dual control circuits or communication links should be provided.

Designing for integrity and reliability

2.2.5 The design and installation of aerodrome lighting systems can affect integrity and reliability in ways other than selection of components and interleaving of circuits. These features are often the same as those used to reduce and simplify maintenance. Some of the features determined in the design decisions are:

a) installing cables in conduits (ducts) instead of direct burial;

b) using inset lights instead of elevated lights in areas where surface traffic often collides with the light fixtures;

c) providing ground-wire circuits throughout the system to reduce the effects of high-voltage surges due to lightning strikes; and

d) equipping light fixtures with heating elements to eliminate moisture condensation and icing problems, etc.

2.2.6 In order to ensure a high level of reliability, the designer should take into consideration the environmental limitations of components of the system that are to be installed, e.g. equipment that has an operational range of +0 to +50 degrees Celsius should be installed indoors. In the case of electronic equipment such as constant current regulators and uninterruptible power supply equipment in the electrical vault, means for improved ventilation may be required. Although cable may be indicated as suitable for very low temperatures, the possibility of ground movement in winter due to frost, may indicate the use of ducts rather than direct burial.

Designing availability

2.2.7 The design decisions that affect integrity and reliability can also be related to the availability of the system *A (see formula below)*, which can be expressed as a ratio of the expected values of up and down time. The operational availability, A_0, would be expressed as the ratio of mean time between failure (MTBF) to the overall period composed of MTBF plus the mean down time (MDT). The ratio can be optimized by minimizing the MDT through adequate provision of materials, tools, and trained personnel. In brief, the airport should be prepared to do repairs to bring the lighting facility back into operation within a minimum period of time.

$$A = \frac{E[up\ time]}{E[up\ time] + E[down\ time]}$$

$$A_0 = \frac{MTBF}{MTBF + MDT}$$

Chapter 3

ELECTRICITY SUPPLIES

3.1 GENERAL

The supply of power for aerodromes should be determined before the design of the aerodrome lighting installations is initiated. The electrical power requirement for visual aids lighting facilities is usually only a small part of the total electrical power used by the aerodrome. Whether the visual aids being installed are for a new aerodrome or for modernization and expansion of an existing aerodrome, the sources of power should be analysed for availability, capacity, reliability, and practicality for the proposed installation and for future expansion. This analysis should include consideration of the requirements in Annex 14, Volume I, Table 8-1 for use in cases of failure or malfunction of the normal power supply.

3.2 SOURCES OF POWER TO THE AERODROME COMMERCIAL/PUBLIC POWER SOURCE

3.2.1 Most aerodromes obtain power through means of feeders from an interconnected electricity network outside the aerodrome. For major airports, it is desirable to have at least two independent incoming power sources coming from widely separated sections of the electricity network beyond the aerodrome, with each supplying separate substations on the aerodrome property. Because the outside network is usually interconnected, in reality it may not be possible to identify sections that are truly independent. Selection is, therefore, on the basis of least probability of simultaneous failure of both sources.

3.2.2 Power to the aerodrome main power substation is usually supplied at a high voltage (over 5 000 volts). The voltage is reduced at the aerodrome substation to an intermediate voltage (2 000 to 5 500 volts) for distribution within the aerodrome. A further step-down of voltage may be necessary to match the required input voltage of visual aids equipment.

3.2.3 Within the aerodrome, reliability of the supply of power to the individual stations can be improved by using a closed ring high-voltage input circuit with balanced voltage protection on the distribution transformers or by using a double loop system from independent primary sources operating as open rings fed from two transformers at each station. With the use of centralized monitoring of fault currents and thereby operation of transfer switches within the loops, the impact of power failures can be minimized. Simpler arrangements providing lesser reliability may be used at smaller airports.

Independent local power source

3.2.4 In addition to a public source, some aerodromes, for economic reasons, may have their own plant facilities for the supply of power. The local power source may be in the form of a diesel-electric generator unit, gas engine, turbine generator or even a solar power plant, such as that shown in Figure 3-1 Aerodromes, due to their inherent nature, tend to have large areas of open unused land. Solar power plants should be designed/oriented so as to avoid possible glare to pilots, glare to the control tower and interference with electronic navigational aids at the aerodrome.

Figure 3-1. Solar power plant — Neuhardenberg Airport, Germany, 1.4 megawatt (photo source: power-technology.com)

3.3 POWER SUPPLY TO AERODROME VISUAL AIDS

3.3.1 Table 3-2, reproduced from Table 8-1 of Annex 14, Volume I, lists the provision of a standby power supply for certain aerodrome lighting facilities (i.e. nonprecision approach, precision approach Category I, precision approach Category II/III and runways meant for take-off in RVR conditions less than a value of 800 m). The design objective for the lighting system is such that, upon occurrence of failure or malfunction of the "normal" supply, automatic transfer takes place to the "standby" supply within a specified period of time.

3.3.2 It is of importance to note that the designations of "normal" supply and "standby" supply are simply labels that are applied to power sources as appropriate for the mode of operation and interruption time. Typically, an aerodrome would have a public power source and a diesel-electric generator unit or interruptible power unit (IPU) for the lighting systems. As shown in Figure 3-2, in the case of non-precision approach and precision approach Category I, the IPU would be labelled as "standby" and the public power source as "normal", the reason being that the IPU can be started and stabilized within the maximum time period of 15 seconds. In the case of precision approach Category II/III and for take-off in RVR less than 800 m, the stipulated transfer time of 1 second requires that the IPU first be brought into operation, thus labelled as "normal" and the public power source labelled as "standby". Other options include the method of powering from a static uninterruptible power unit (SUPU) for lighting that needs a maximum 1-second interruption. Compared to the method in which an IPU is first activated, this method is favourable in terms of fuel cost and environmental benefit. The airport should select the most suitable method taking into consideration power supply conditions and cost-performance for the site.

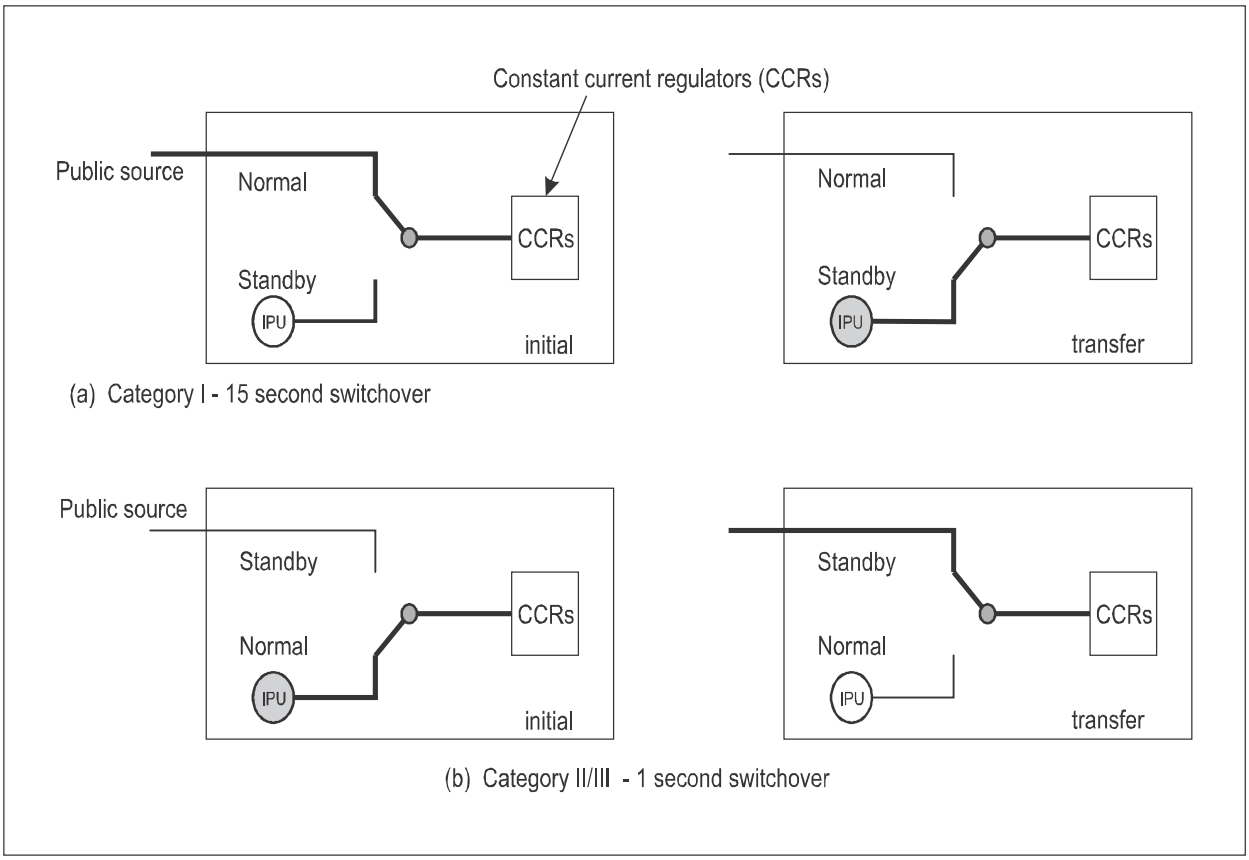

Figure 3-2. Normal and standby power supply

3.3.3 A simple way of looking at this is to consider "supply" as the electricity itself and “source” as the origin of the supply. Which source is the origin of which supply (normal or standby) is dependent upon the mode of operation as shown in Table 3-1. The terms "primary" and "secondary" tend to be considered as permanent labels as to identify specific equipment, whereas the operational use of the terms "normal" and "standby" could be more appropriate since they point to the operational use of the equipment.

Table 3-1. Supply versus mode of operation

Operation	*Normal supply*	*Standby supply*
Category I	public power source	local generator
Category II/III	local generator	public power source

3.3.4 A second public power source may be designated for service as the standby supply. However, such design approach necessitates a high level of service. The integrity of operations provided by independent public power sources depends on the separation and independence of these sources. If both come from interconnected distribution networks, a failure in the network may cause both sources to fail. In addition, the alternate sources may not be in a reserve status only and may be supplying electrical power to other facilities on the aerodrome. The latter should have adequate capacity to provide the power for essential aerodrome lighting aids when required. As well, attention must be paid to coordination of protective devices such that the failure of a non-essential load does not lead to complete loss of the supply including that to the visual aids.

3.3.5 Although the use of a second public or local independent power source is feasible, it is preferable that the aerodrome visual aids be provided with its own local power source in the form of an engine-generator set with capacities ranging from 50 to more than 1 000 kVA. This local power source should be capable of supplying power for a time period that exceeds the maximum time needed to restore power from the primary source. Engine-generator sets are often expected to operate for 24 to 72 hours without refuelling.

Synchronization

3.3.6 As an alternative to separate switching of the normal and standby power supplies, the emergency power unit (IPU) may be synchronized with the public source, i.e. coupled together to operate in unison, as shown in Figure 3-3. This offers better efficiency of the generated power and eliminates interruption of power supply to the constant current regulators (CCRs). In this case, labelling for a "normal" or "standby" supply is not used, since in a sense either label would apply.

3.4 UNINTERRUPTIBLE POWER SUPPLY

3.4.1 Another alternate method utilizes an uninterruptible power supply (UPS) (sometimes called uninterruptible power source or uninterruptible power system). As shown in Figure 3-4, for initial operation the public source is the normal supply to the CCRs. With failure of the public source a two-step process then takes place. In Step 1, the UPS provides power to the CCRs. This step may last for 15 to 30 minutes or more depending upon the size of the batteries. Prior to exhaustion of the batteries, the IPU is started so that it is available to take over the load in Step 2.

3.4.2 In as much as the CCRs are not exposed to an interruption for start-up of the standby supply, the process can similarly be applied for Category II/III operations. The benefit for the airport is two-fold. Since the IPU is the standby supply for Category II/III, its hours of operation are substantially reduced leading to economies for fuel consumption and maintenance. Reduction occurs as well for Category I operations since the UPS can provide power for failures of the public source which are less than 30 minutes. The associated benefit is environmental in that a reduction in hours of operation of the IPU also reduces emissions and thus the carbon footprint of the airport.

3.4.3 A further optimized method to meeting required interruption time is to separate particular lighting facilities such as that for runway edge and runway centreline/touchdown zone lighting, as shown in Figure 3-5, so that the latter is supplied by the UPS. In this fashion, the IPU serves as standby for all facilities under Category II operations according to Annex 14, Volume I, Table 8-1. When transfer occurs, the UPS provides power to the runway centreline/touchdown zone lighting to meet the 1-second requirement whilst the runway edge lighting waits through the 15-second start-up for the IPU.

3.4.4 The UPS often comes in the form of an electronic package with a battery bank for storage of energy and is referred to as a static uninterruptible power unit (SUPU). A UPS consisting of an engine and an electric generator with a flywheel for storage of energy is a rotary uninterruptible power unit (RUPU). The RUPU, used at numerous airports, lost popularity due to a variety of issues, albeit it is being re-considered more often today due to advancements in the technology.

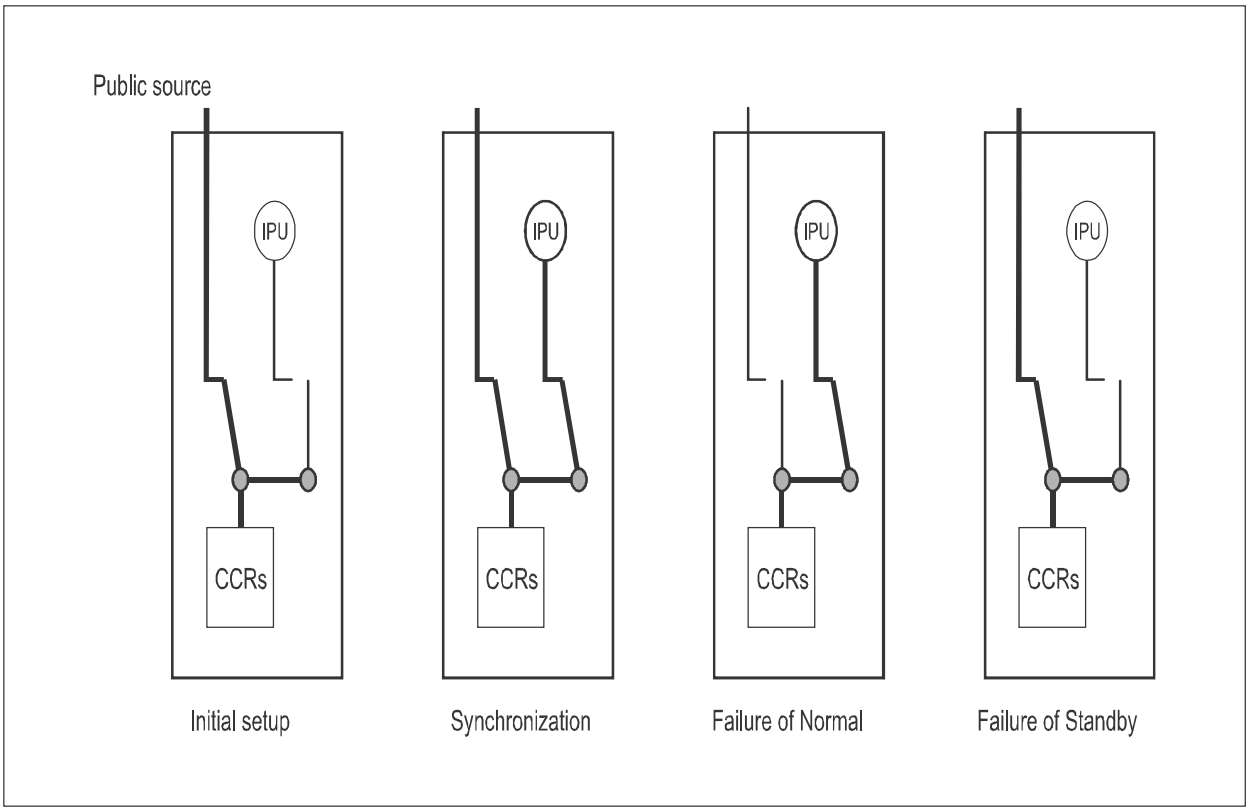

Figure 3-3. Synchronization of sources

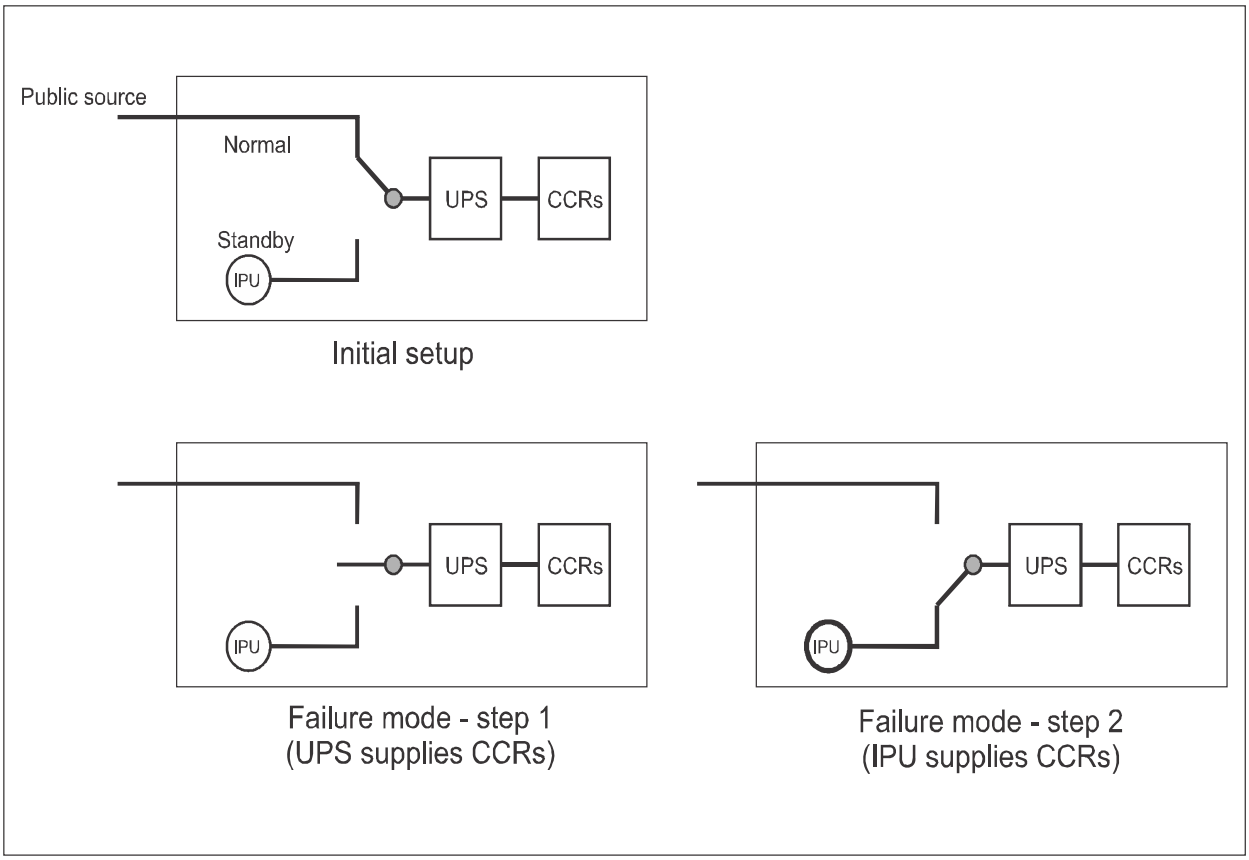

Figure 3-4. Operation with UPS

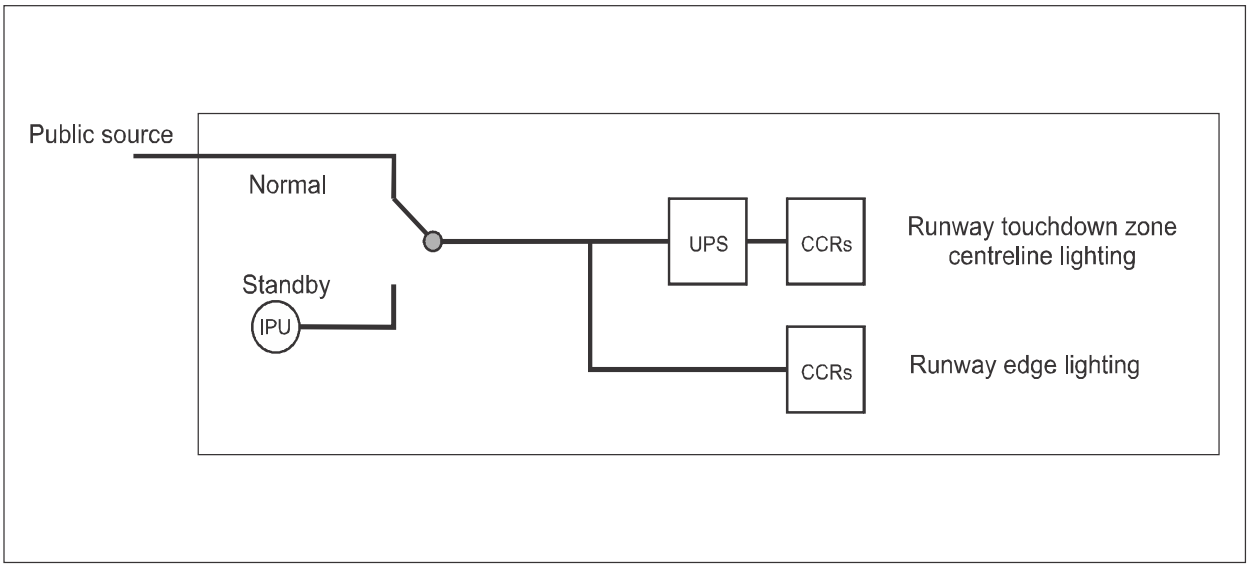

Figure 3-5. Separation of lighting facilities

Table 3-2. Secondary power supply requirements for visual aids
(Extract of Table 8-1 of Annex 14, Volume I, 7th edition, July 2016)

Runway	*Lighting aids requiring power*	*Maximum switch over time*
Nonprecision approach	Approach lighting system Visual approach slope indicators (a) (d) Runway edge (d) Runway threshold (d) Runway end Obstacle (a)	15 seconds 15 seconds 15 seconds 15 seconds 15 seconds 15 seconds
Precision approach Category I	Approach lighting system Runway edge (d) Visual approach slope indicators (a) (d) Runway threshold (d) Runway end Essential taxiway (a) Obstacle (a)	15 seconds 15 seconds 15 seconds 15 seconds 15 seconds 15 seconds 15 seconds
Precision approach Category II/III	Inner 300 m of the approach lighting system Other parts of the approach lighting system Obstacle (a) Runway edge Runway threshold Runway end Runway centreline Runway touchdown zone All stop bars Essential taxiway	1 second 15 seconds 15 seconds 15 seconds 1 second 1 second 1 second 1 second 1 second 15 seconds
Runway meant for take-off in runway visual range conditions less than a value of 800 m	Runway edge Runway end Runway centre line All stop bars Essential taxiway (a) Obstacle (a)	15 seconds (c) 1 second 1 second 1 second 15 seconds 15 seconds

(a) Supplied with secondary power when their operation is essential to the safety of flight operation.
(c) One second where no runway centre line lights are provided.
(d) One second where approaches are over hazardous or precipitous terrain.

Transfer (switch over) time requirements

3.4.5 When the normal power source for critical visual aids fails, the load must be transferred to the standby power source. In the case of a local power source such as a diesel-electric generator unit, this source must be started, brought up to speed and the voltage output stabilized before the load can be transferred.

3.4.6 The "maximum switch over time", as illustrated in Figure 3-6, is defined as the duration for the measured intensity of a light to fall from 50 per cent of the original value and recover to 50 per cent during a power supply changeover when the light is being operated at intensities of 25 per cent or above. It is not the time for an electrical transfer to occur in the vault. As such, the switch over time is really an interruption time but of the light output rather than of the electricity. The time can be verified by a measurement of photometric output from a light in the field or a sample light installed in the vault. It is to be noted that with switch over, the output of an incandescent light does not actually go to zero due to the thermal inertia in the lamp filament. This may not be the case for LED lighting for which inductance in the circuit may pay a more important role.

3.5 EQUIPMENT

Components

3.5.1 The components of the electrical power system should be of such quality that they will provide the reliability, availability, and voltages and frequencies needed by the facility. The major items of equipment commonly used for aerodrome lighting are engine-generator sets, power-transfer switching devices to furnish power for starting the engine generators, and vaults or shelters for this equipment.

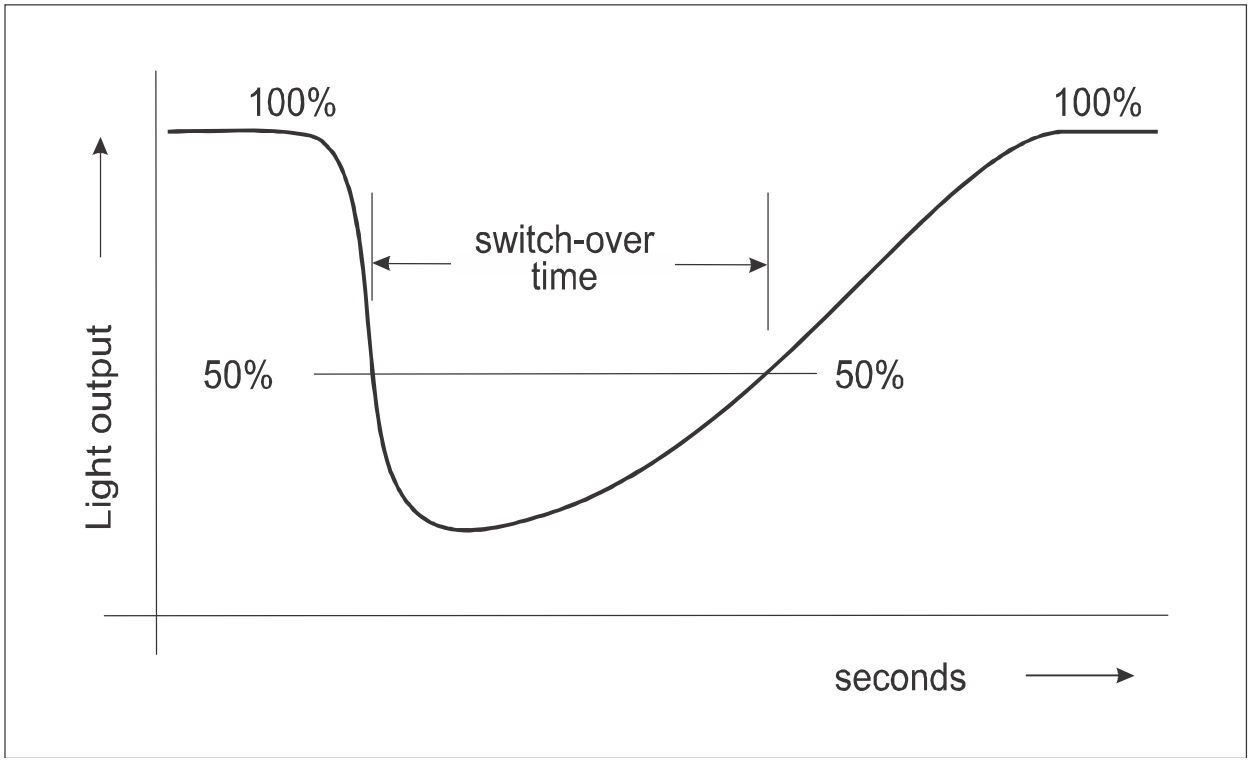

Figure 3-6. Transfer (switch over) time characteristic

Engine-generator set

3.5.2 The basic secondary power source is an engine-generator set consisting of a prime mover, a generator, a starting device, starting controls, and a fuel tank. Engine-generator sets for secondary power units are usually rated at 100 to 500 kVA capacity, but may range from 50 to 1 000 kVA in capacity.

a) *Prime movers.* The prime movers for most secondary power units are gasoline, diesel, or gas engines or gas turbines, the choice being based on cost and availability of fuels. These prime movers are usually available in standardized sizes with adequate power to handle the kilovolt-ampere rating of the generator. The prime movers for most major aerodromes are rapid-start types which can start automatically, stabilize their speed, and be connected to the load within 15 seconds.

b) *Generators.* The generator, usually an alternator, is mechanically coupled to the prime mover and provides secondary electrical power at the frequency, voltage, and power rating of the unit. They may be either single-phase or three-phase generators. They should have high efficiency in converting mechanical energy to electrical energy (see Figure 3-7).

c) *Starting devices.* Most secondary power engine-generator sets use battery packs to store energy for starting. Due to infrequent use, short operating periods, high starting current demands and cost, lead-acid type batteries are used most frequently for starting these units. The battery pack (often a set of batteries connected in series and/or parallel) must be capable of providing the voltage and current needed to start the engine within the required time limits and under the most severe conditions (usually at a low temperature of -7ºC) at which the secondary power unit is expected to operate. A battery charger with over current and overcharge control is permanently connected to the electrical power to maintain the stored energy in the batteries. The battery pack should be well-ventilated to prevent accumulation of hydrogen gas and should be protected from arcs, sparks or flames which could cause an explosion of any accumulated gas. Nickel-cadmium batteries may be used where special conditions warrant their high initial cost. Flywheels, pneumatic pressure vessels, other-than-battery stored energy devices are used infrequently for engine starting because of unreliability or cost.

d) *Starting controls.* The controls for the engine-generator set are usually an automatic start with a sensor for primary power failure as part of the transfer switching device. Manual or remote controls are sometimes used for facilities with low critical requirements. Once it is started, speed and power are automatically regulated by the engine and the electrical load is connected by the transfer switch. The engine generator should operate automatically without adjustment or other attention. Transfer of power back to the public source and stopping the engine may be automatic or by remote control.

e) *Fuel supply.* Liquid fuel for the IPU is usually stored in tanks near the engine generator location. The capacity of the fuel tanks should be adequate for the maximum operating time expected of the engine-generator. Some authorities require a minimum of 72 hours supply. Others design for a lesser time period, but the time period usually should be at least twice the maximum duration expected of conditions that could require the use of secondary power. The facility is sometimes provided with an outside fuel tank and a smaller inside "day tank". Fuel tanks and connections should meet all safety requirements and should provide convenient access for refuelling. These tanks should also be designed to provide arrangements for testing for contamination of the fuel, especially the accumulation of water in the tank.

Figure 3-7. Diesel-electric generator set (source: Toronto International Airport)

Power transfer switching

3.5.3 A suitable transfer device is needed for transferring power from the normal supply to the standby supply. For manual starting and control this may be a simple switch or relay that disconnects the load from one power source and connects it to the other. Additional controls are needed for automatic transfer. These are usually combined into a single control unit or cubicle. Such a unit should be capable of sensing the failure of normal supply, initiating the starting of the standby unit, determining that the voltage and frequency of the generator have stabilized adequately, and connecting the load to the generator. This unit may also disconnect non-essential loads and facilities which are not to be energized by the standby supply and transfer these loads back to the normal supply after it has been restored. The switches or relays for disconnecting and connecting the load should have the capacity to handle the rated load of the generator. The functioning of these switches or relays is similar for either the 15-second, or 1-second transfer times, although more rapid-acting relays may be needed for the shortest transfer time. For a 15-second transfer, the sensors must respond in less than 3 seconds each because the quick starting engines need at least 10 seconds to start and to stabilize (see Figure 3-8).

Figure 3-8. Transfer panel (source: Toronto International Airport)

3.6 VAULTS AND SHELTERS FOR ELECTRICAL EQUIPMENT

Shelters

3.6.1 Most electrical equipment for airport lighting and other facilities is located in vaults or special shelters for protection from the weather and for better security. Substations for high voltage are usually outdoors while medium voltage distribution transformers are often placed on fenced transformer pads. Most electrical vaults are above ground and made of fireproof materials. Reinforced concrete for the floors, and concrete or cinder block and/or brick for the walls, are materials commonly used in these vaults. The use of such materials reduces the hazard of electric shock, shorting of electrical circuits and fire hazards. Prefabricated metal structures are occasionally used as shelters for transformers and engine-generator sets. These vaults are used to house the power distribution and control equipment, secondary power equipment and the various devices used to provide power and control for the airport lighting systems. The vaults should be of adequate size to contain the necessary equipment without crowding and may be divided into rooms for better segregation of equipment and activities. Figure 3-9 is an example of an electrical vault.

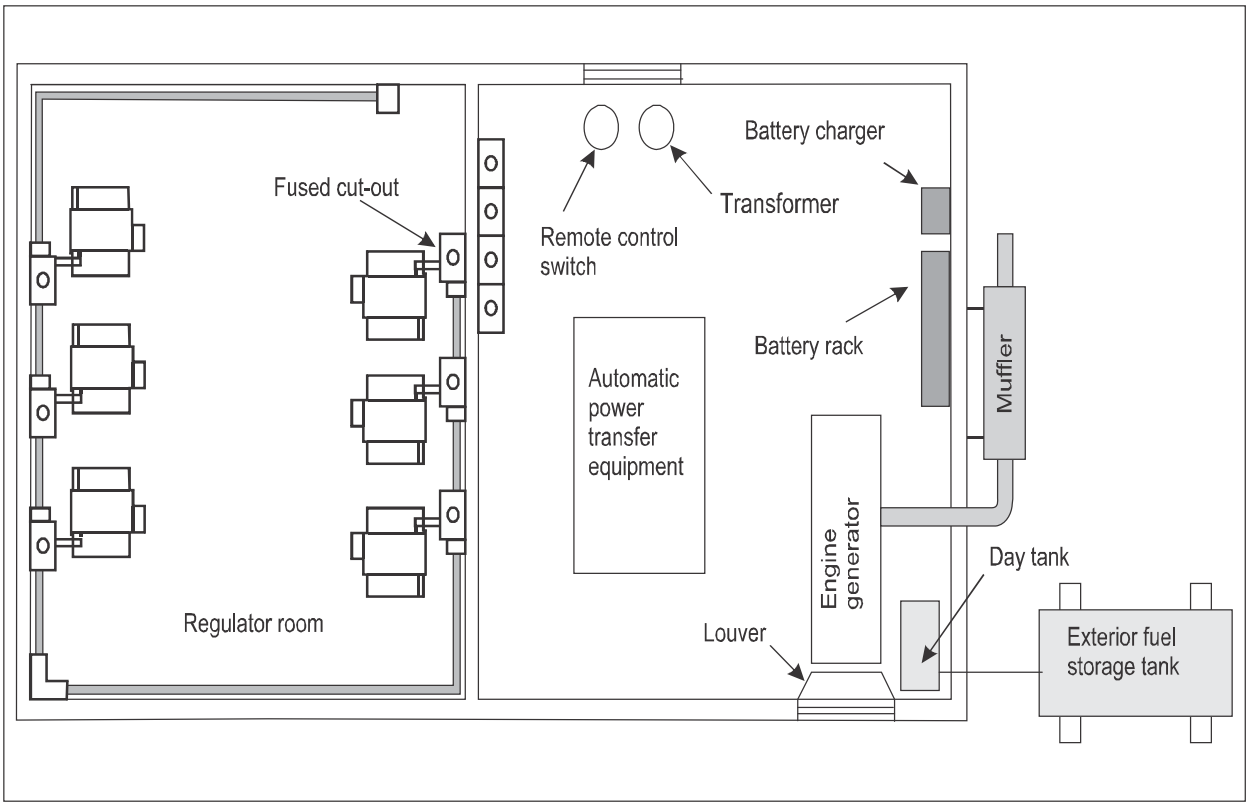

Figure 3-9. Electrical vault (source: UFC-3-535-01)

Location

3.6.2 Electrical vaults should not be located where they would infringe on obstacle limitation surfaces. The distances from the control tower to the vaults should be short enough to avoid excessive voltage drop in the control cables. The permissible length of these cables varies with the size of the cable, the control voltage and the types of control relays used. However, some of the longer control systems limit the length of control cables to about 2 250 m. Vehicular access to the vaults in all types of weather conditions is necessary and minimum conflict with aircraft traffic is desirable. The location should be convenient for connecting to the appropriate lighting circuits and facilities while keeping feeder cable lengths as short as is practical.

3.6.3 The vaults should be isolated from other buildings and facilities to prevent the spread of fires or explosions, except the shelters for secondary engine-generator sets may be near the electrical vault to reduce cable length and size and to simplify the power transfer system.

3.6.4 Aerodromes with approach lighting systems may need separate approach lighting vaults for each approach lighting system. For major aerodromes, some authorities use a vault near each end of the runway or approach lighting system to more easily arrange for interleaving of the lighting circuits and to improve integrity of the systems.

3.6.5 In some States, the term field electric centre (FEC) is used. The term refers to the location at or near the centre of the airfield from which the length of feeder cables to the lighting loads would be minimum.

Special provisions

3.6.6 As special purpose buildings, electrical vaults may require special features to provide safety and reliable performance of the equipment (see Figure 3-10). Some of these features are as follows:

a) *Ventilation.* Provide adequate ventilation to prevent transformer temperatures exceeding the values prescribed by the equipment manufacturers. Most of the electrical heat losses must be removed by ventilation; only a minor part can be dissipated by the vault walls. Some electrical codes recommend 20 cm^2 of clear grating area per kVA of transformer capacity. In localities with above-average temperatures, such as tropical or subtropical areas, the grating area should be increased or supplemented by forced ventilation.

b) *Access.* Adequate access should be provided for repairs, maintenance, installation and removal of equipment. Sufficient access should be provided for bulk fuel delivery (e.g. tanker fuel truck).

c) *Drainage.* All vaults should be provided with drainage. When normal drainage is not possible, provide a sump pit to permit the use of a portable pump.

d) *Security.* Each electrical vault should be equipped to deter inadvertent or premeditated access by unauthorized persons. This security is necessary to prevent interference with equipment operation and to protect those persons from possible electric shock. Some methods used are barred and screened windows, heavy-duty metal doors with padlocks and security fencing.

e) *Vault lighting.* Electrical vaults should be well-illuminated for use during day or night. This lighting is usually provided by interior lights of a size, type and location to provide good visibility in all areas. Poor visibility can increase the potential for accidents resulting in electrical shock or improper control and adjustments. The vault should be provided with emergency lighting that will be operational upon failure of the main power supply.

f) *Local communications.* Most electrical vaults should be provided with convenient and reliable communications to the control tower, other vaults and perhaps other facilities or offices. Special telephone or intercommunication systems may avoid outside interference with these circuits, but other dependable arrangements can be used.

g) *Electrical conduits.* Electrical vaults should be provided with a sufficient number of conduits and cable entrance accesses to avoid later modification of the structure to permit the installation of additional input or output circuits. These cables entrances are usually through underground conduits which may be connected to existing cable ducts, direct burial cables, or unused conduits available for future expansion. Unused conduits should be plugged and conduits with cables should be sealed.

h) *Installations of equipment.* Arrange the equipment, especially the larger items such as regulators, distribution transformers, control panels and circuit selector or control devices, to provide a simple, uncluttered plan. This arrangement should consider safety, especially protection from high-voltage electrical connections, as well as access to the equipment and controls. The electrical circuits should also be arranged in a simple pattern wherever possible. Follow the applicable electric safety codes for installing all electrical circuits and controls. An overhead rail-mounted hoise should be provided to facilitate maintenance on the diesel generators.

i) Where the engine generator and switchgear are located in a separate enclosure from the constant current regulators, interconnection should be made by means of placing the feeder in a concrete encased duct or steel conduit, without splices or intermediate manholes. If their location is relatively remote, connection should be made by means of dual feeders.

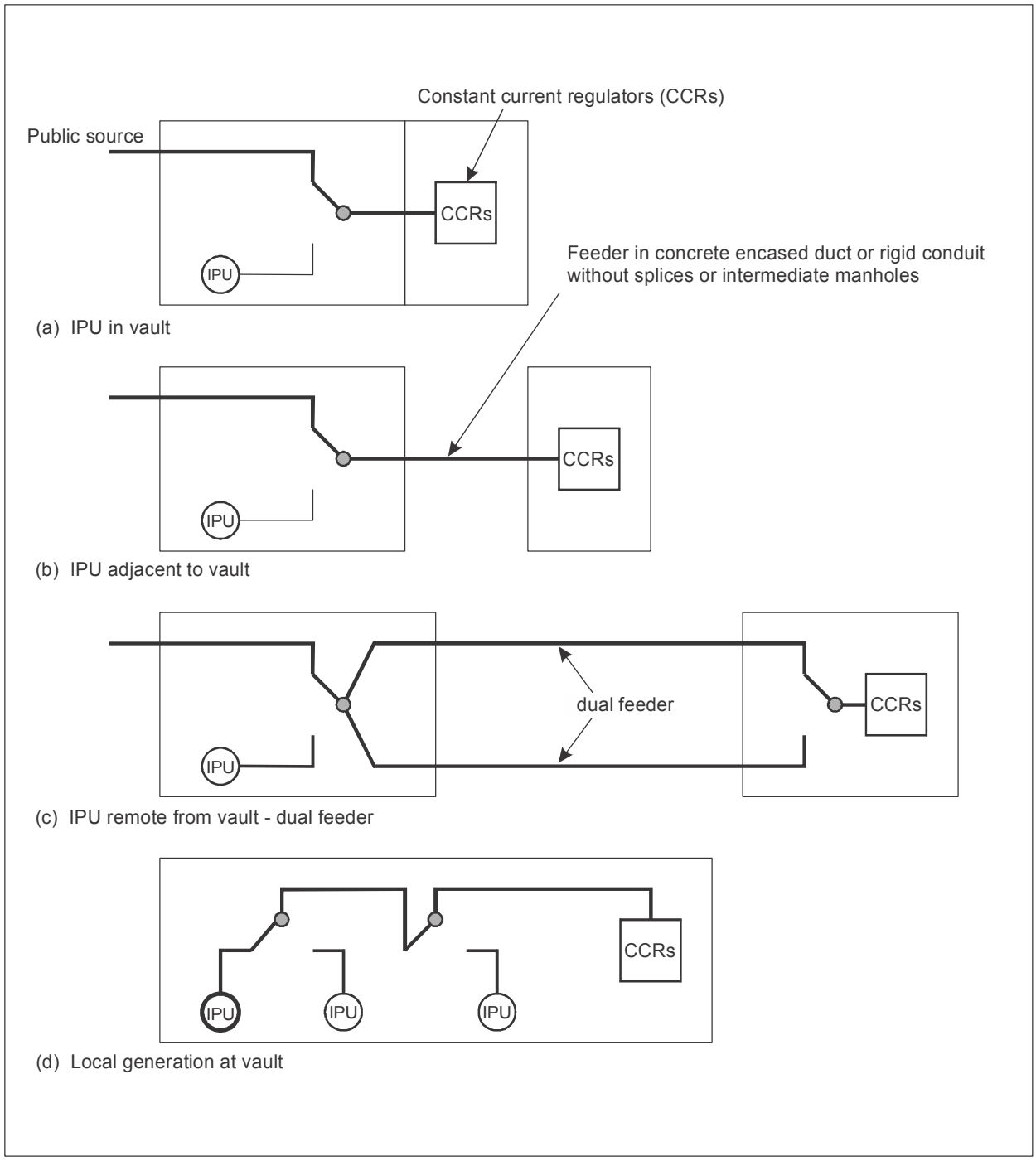

Figure 3-10. IPU configurations

Capacitors

3.6.7 *Types of capacitors.* Use shunt capacitors to improve the power factor of the load carried by the circuit. In applying capacitors, consider the following:

a) *Fixed capacitance.* Fixed capacitance is the amount of capacitance that can be applied continuously without excessive voltage rise at reduced load.

b) *Switched capacitance.* Switched capacitance is an additional amount of capacitance that can be applied, if provision is made to switch off this additional amount at reduced demand.

c) *Capacitor switching.* Select a type of capacitor switching that is suitable for the specific condition. Possible choices include remote control of the capacitor switching device, time-lock control, power-factor relay control or voltage-sensitive relay control.

3.6.8 *Location of capacitors.* Install capacitors in banks, at ground level, or in a substation as near as possible to the centroid of the area where connection is required.

3.6.9 *Switches.* Use switches to localize defective portions of aerial and underground circuits and to accomplish dead-circuit work. Select from one of the following principal types:

a) *Non-load-break switches.* Use non-load-break switches only for the interruption of circuits that carry no appreciable load. Select the type applicable, depending on circuit importance, load, voltage and fault circuit duty. The types available are porcelain disconnect fuse cut-outs, plain or fused single pole air disconnect switches and disconnect fuse cut-outs of various types. Disconnecting and horn-gap switches may also be used as non-load-break switches. All such non-load-break switches should have a closure rating that is greater than the short circuit current available on the circuit.

b) *Load-break switches.* Load-break switches are provided with an interrupting device capable of disconnecting circuits under load. Fuse cut-outs, which are designed to be load-break and load interrupter switches, are available. Vacuum switches also provide load-break capability.

3.6.10 *Counters.* As a means of maintenance, event counters and elapsed time counters may be installed in the electrical equipment (see Figure 3-11).

Figure 3-11. Elapsed time counter

Chapter 4

DISTRIBUTION OF POWER

4.1 GENERAL

The equipment examined in this section relates to that used in transmitting electrical power for aerodrome lighting between the main aerodrome substation(s) and the lighting vaults or the local site distribution transformers. Descriptions of equipment are in general terms of characteristics and needs and usually are not related to specific types or items of equipment. Types of equipment and number of devices will vary greatly with the size and complexity of the aerodrome. Economics is an important part of the installation criteria and only equipment that contributes to performance, safety, reliability and integrity should be used. The circuits and equipment used should provide for a reasonable expansion of facilities. Efficient use of electrical power is always a desirable goal, but the power cost for aerodrome lighting is usually a rather small part of the total aerodrome energy cost and should not be emphasized to the point of overly increasing installation costs or of diminishing performance, safety or reliability. Local electric safety codes should be followed (see Figure 4-1).

4.2 PRIMARY POWER FEEDER CIRCUITS

Primary power is usually reduced in voltage at the main aerodrome substation for distribution on the aerodrome. For major aerodromes, this power at the first stage may be at an intermediate voltage (usually 5 000 to 20 000 volts), but for smaller, less complex aerodromes, the power may be distributed at medium voltage (usually 1 000 to 5 000 volts). The distance and total load on the circuit are important factors in determining the voltage level of transmission. For intermediate-voltage distribution systems, power is often run to substations where it is reduced to medium voltage for local distribution. A combination of these voltage distribution systems may be used. Primary power is transmitted from the main substation to the local substation or distribution sites usually as multi-phase circuits by above ground (overhead) circuits, underground circuits, or a combination of these. Above ground circuits are less expensive to install and are usually used if feasible, but these circuits may be more exposed to damage and, in some areas, are a hazard to aircraft and create electromagnetic interference for other equipment. Power lines that extend into or near the manoeuvring area are of necessity installed underground. Underground feeder cables are usually installed in ducts, but sometimes direct burial is used. Each type of circuit, whether overhead or underground, involves specific types of equipment and design.

4.3 ABOVE GROUND (OVERHEAD) PRIMARY DISTRIBUTION SYSTEMS

The following factors should be considered in the design of a power distribution system:

a) *Application.* Use overhead distribution in lieu of underground distribution whenever feasible. Overhead distribution should be avoided for locations on airport property.

b) *Capacity.* Provide for spare capacity in each portion of the circuit. Peak loads do not relate directly to spare capacity.

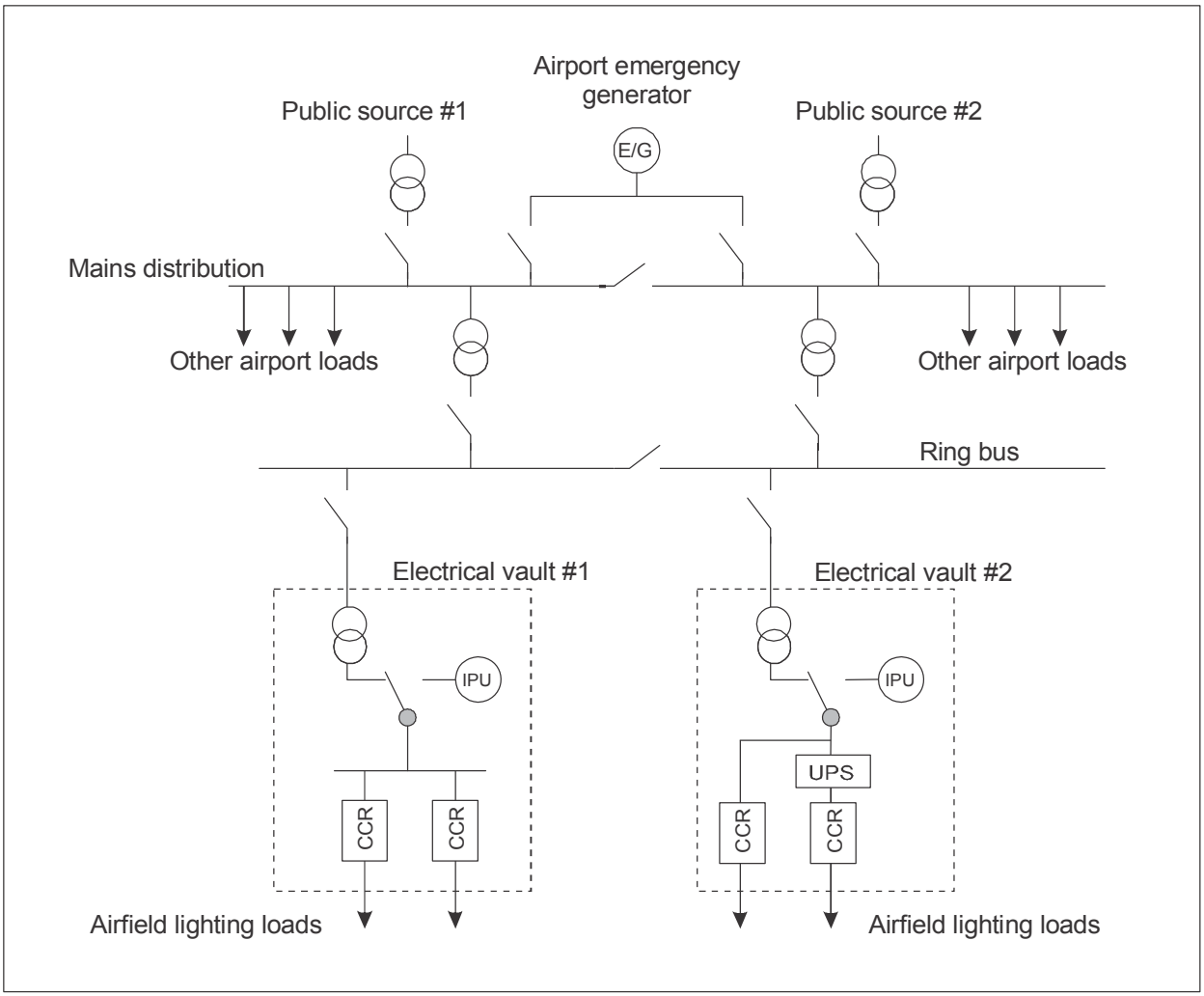

Figure 4-1. Power schematic

c) *Wire size.* Select the wire size in accordance with the current carrying capacity required and, where applicable, the voltage-drop limitation.

d) *Hazard to aircraft.* The design of an overhead distribution system must respect the requirements of obstacle limitation surfaces. In some cases, overhead distribution may be unacceptable due to helicopter operations.

4.4 LINE-VOLTAGE REGULATORS

Regulators are used for correction of line-voltage variations resulting from changing loads or utility company input voltage changes. Do not use these regulators to correct for excessive voltage drops. Booster transformers which correct for voltage drop should be used only in rare instances as, in most cases, correct design eliminates excessive voltage drop.

a) *Rating.* Choose the rating of the regulating devices in accordance with the amount of regulation required.

b) *Selection.* Choose the type of regulators, fixed capacitors, switched capacitors, multi-step (motor-driven tap changing) regulators and induction (stepless voltage change) regulators.

c) *Multi-step or induction regulators.* Provide line-drop compensation for automatic operation when these regulators are used on more than one source or when more than one regulator is used on a single circuit.

4.5 POWER LINES

Select the type of power lines in accordance with the type of circuit involved and the conditions to which it is subjected from the following:

a) Open wire (bare or weatherproof) on insulators.

b) Aerial cable, self-supported or supported by a high strength steel (messenger) cable, consisting of insulated, bundled, single-conductor cable or multiple-conductor cable.

4.6 LINE SUPPORT MATERIALS

Mention is made herein of pole-mounted equipment for the sake of completeness. Pole-mounting, however, should be avoided particularly near the approach and manoeuvring areas.

a) *Poles.* Wood, reinforced concrete, or metal (steel or aluminium) may be used. Concrete or metal poles should be used only where they are more economical or special considerations warrant their use.

b) *Footings.* Provide footings or reinforcements of the pole butt-end, as required by foundation conditions.

c) *Configuration.* Armless construction for aerial lines is usually less costly than crossarm construction and its use is preferred, as is multi-conductor secondary cable with a large neutral conductor as the supporting member over individual supported conductors. Use crossarms mainly for equipment support.

d) *Guys and anchors.* Provide guys and anchors to support poles or line towers against horizontal unbalanced loads caused by angles, corners and terminations of lines and where required because of extreme wind loadings. Consult manufacturers' catalogues for types of earth anchors and design data. Select equipment suitable for the particular soil conditions and the construction method to be used.

e) *Aerial markers.* Depending upon location, above ground power lines may require the installation of markers, e.g. sphere, in accordance with State obstacle lighting and marking standards.

4.7 CONDUCTORS

4.7.1 Select pole-line conductors with consideration of installation, operational and maintenance points of view. Special instances may require larger conductors. In all instances be sure that the type and size of conductors used provides adequate strength for the span lengths and loading conditions.

4.7.2 In special instances, use of the following conductors may be appropriate for primary conductors:

a) Insulated conductor, copper or aluminium, preassembled non-metallic-sheathed or metallic-sheathed, steel-cable-supported (messenger-supported) aerial cable is used where necessary to avoid exposure to open wire hazards, for example, high reliability service in heavy storm areas.

b) Compound conductor materials such as copper-clad steel, aluminium-clad steel, galvanized steel, or bronze are used to provide high strength and corrosion resistance.

Dissimilar conductors

4.7.3 Where it is necessary to connect aluminium conductors to copper conductors, appropriate connectors specifically designed for such use should be installed in accordance with the instructions of the manufacturer.

4.8 TRANSFORMERS

Mounting of transformers

4.8.1 Mount transformers on poles or at ground level. When sheet-metal enclosures are not tamperproof, ground mounted units should be provided with a fenced enclosure. A concrete or brick structure should be used where adverse weather conditions make such an installation advisable.

a) *Single-pole mounting.* For single-pole mounting, limit the size of single-phase or three-phase units in accordance with approved practices.

b) *Pole-platform mounting.* Pole-platform mounting (two-pole structures) should not be used, except in instances where other methods are not satisfactory. For installations of 225 or 500 kVA, pad-mounted compartmental-type transformers become a desirable economic alternative to pole-mounted units.

c) *Ground mounting.* For ground mounting on a concrete base, there is no kilovolt-amperes limit. Usually tamperproof transformers (classified as pad-mounted compartmental-type units) should not be specified for ratings of over 500 kVA.

Ratings

4.8.2 Select transformers with standard kilovolt-amperes ratings and input and output voltage as single-phase or three-phase units. Transformers with input voltage taps for selecting the most suitable input voltage level may be desirable for some installations.

Indoor installations

4.8.3 Oil-immersed (flammable) transformers should not be installed indoors except in vaults conforming to the requirements of the applicable electrical code. Such vaults should be provided only when other types of transformers are less economical or are prohibited by special considerations. Where such a vault is not provided, select transformers for indoor installation from the following:

a) high-fire-point, liquid-immersed;

b) dry-type, ventilated;

c) dry-type, sealed tank; and

d) non-hazardous gas-insulated.

Toxic insulation fluids

4.8.4 The transformers should not use poly-chlorinated biphenyl (PCB) or other highly toxic insulation fluids. Leakage or mishandling of these chemicals during maintenance testing can be hazardous to personnel.

4.9 CIRCUIT INTERRUPTION DEVICES

Fuses

4.9.1 After consideration of the necessary current carrying capacities, interrupting duties, and time-current melting and clearing characteristics, select fuses from the following types:

a) open fusible link;

b) expulsion type;

c) boric-acid type; and

d) current-limiting type.

Circuit-breakers

4.9.2 Coordinate the circuit-breaker rating with the load interrupting duty and with circuit-breakers and fuses ahead of or after the circuit-breaker.

Automatic circuit reclosers

4.9.3 Use of automatic reclosers for other than overhead line loads may cause problems from high-resistance ground faults. If an automatic circuit recloser is used, consider the reliability and continuity requirements of the service. Reclosers may consist of a circuit-breaker or multiple switching devices. Reclosers operate so that a faulted circuit may be opened and then, either instantaneously or with deliberate time delay, reclosed. Up to three reclosures with varying time intervals may be used. Automatic circuit reclosers should be coordinated with fuses or circuit-breakers on the same circuit.

Switches

4.9.4 Use switches to localize defective portions of aerial and underground circuits and to accomplish dead-circuit work. Select from one of the following principal types:

a) *Non-load-break switches.* Use non-load-break switches only for the interruption of circuits that carry no appreciable load. Select the type applicable, depending on circuit importance, load, voltage and fault circuit duty. The types available are: porcelain disconnect fuse cut-outs, plain or fused single-pole air disconnect switches and disconnect fuse cut-outs of various types. Disconnecting and horn-gap switches may also be used as non-load-break switches.

b) *Load-break switches.* Load-break switches are provided with an interrupting device capable of disconnecting circuits under load. Fuse cut-outs, which are designed to be load-break and load-interrupter switches, are available. Vacuum switches also provide load-break capability, however, these may need surge protection devices to eliminate transients.

4.9.5 Circuit interruption devices should be of the plug-in withdrawable type, to permit quick replacement in case of failure.

4.10 LIGHTNING PROTECTION

4.10.1 To determine the requirements for lightning protection, consider overhead ground wire, open or expulsion gaps, and distribution-type surge (lightning) arresters. The weather should also be considered. Protection for lightning induced surges may be unnecessary in areas where annual lightning storms are few. Administrative policy or local electric power company practice should usually be followed. Select the proper arrester in accordance with the chosen basic impulse insulation level for which the circuit must be built.

4.10.2 The keraunic level describes the lightning and thunder activity in a given area. It is defined as the annual number of days where thunder can be heard. This number in some areas will vary significantly and the keraunic level is the long-term average. In temperate regions, the value is 10 to 30; in the African rainforest, values exceeding 180 can be reached. The annual number of lightning flashes hitting one square km of ground, N_g, can be calculated for temperate regions using the following formula:

$$N_g = 0.04\ T_d^{\ 1.25}$$

where T_d is the keraunic level.

Note.— In application, the keraunic level has been used to set standards for the safe design of electrical systems in structures connected to the local power grid. Sources: EN61400-24, IEC 60664-1 and IEC 60364-4-44.

4.10.3 The more lightning strikes per year, the higher the risk of the lighting facilities on the airside being hit: the following figure shows the map of the world with isokeraunic lines (i.e. lines of the same number of lightning days per year) superimposed on it. For each area, a more accurate map should be available at the weather institute of the State. Some available charts show flash density or number of flashes per square kilometre per year (see Figure 4-2).

4.11 CLEARANCES

Provide the necessary horizontal and vertical clearances from adjacent physical objects, such as buildings, structures and other electric lines, as required by the applicable electrical safety code. Provide against contingency interferences, such as broken poles, broken crossarms and broken circuit conductors. Provide for clearance conditions arising from multipurpose joint use of poles. See the applicable electrical safety code for climbing space clearances, joint use and supply conductor protection.

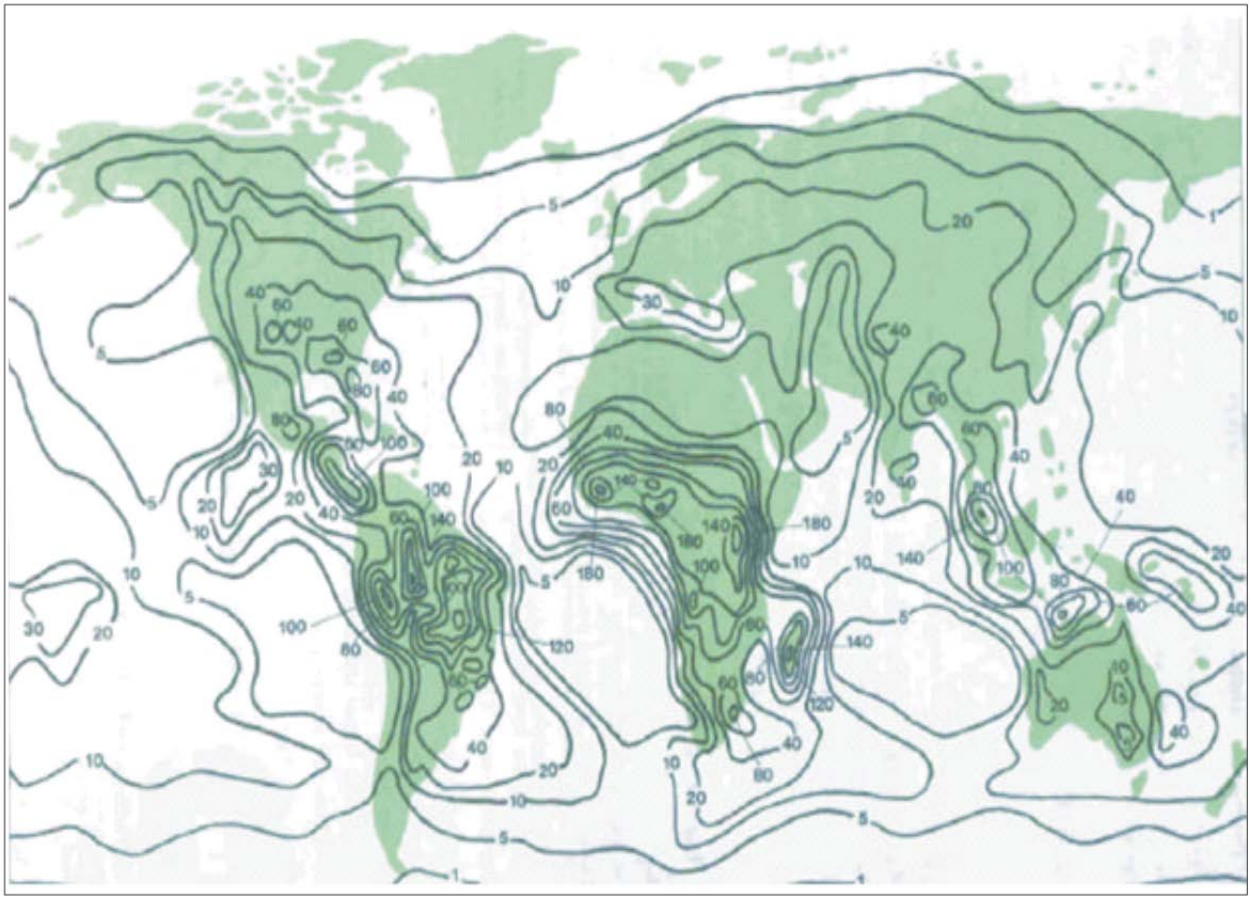

Figure 4-2. Iso-Keraunic lines (adapted from WMO publication 21 (1956))

4.12 GROUNDING

4.12.1 For information on grounding of overhead distribution systems, use the applicable electrical safety code or administrative policy. Also refer to IEC 60364, *Electrical installations for buildings*. For safety, provide grounding for all equipment and structures associated with electrical systems to prevent shock from static or dynamic voltages. Maximum ground resistance should not exceed values specified in the applicable electrical safety code. Consider the source of electric power, capacity, magnitude of fault current and method of system grounding, as they affect this resistance.

Ground rods

4.12.2 Ground rods may be used either singly or in clusters. Drive the ground rods to ground water level for an effective and permanent installation. Provide for corrosion prevention by a proper choice of metals or by cathodic protection. Where ground water cannot be reached, chemicals such as magnesium sulphate ($MgSO_4$) or copper sulphate ($CuSO_4$) may be used to improve soil conductivity where necessary. Manufacturers of ground rods can provide data on such treatment. Provide for easy maintenance and periodic testing. Although driving ground rods deeper (sectional type) may be more effective than multiple rods, in many cases, soil variations and possible bedrock may make provision of additional rods less expensive.

Grounding network

4.12.3 A buried network of ground conductors will assure an effective safety ground in poor soil and will eliminate large voltage gradients at substations for utility aerodrome interconnections. Mesh spacing of 3 to 3.5 metres are commonly used and usually such spacings can control surface voltage gradients even though the ground resistance may be relatively high.

Water pipe connections

4.12.4 The use of water pipes for grounding connection is not recommended since: the electrical characteristics of pipes are not well defined: leakage currents can result in corrosion of the pipes; the pipe may be modified by later construction or maintenance of the water system when there is installation of sections of non-metallic pipe, cathodic protection or insulating couplings.

Combination of grounding methods

4.12.5 Where the ground resistance in an existing system is high, two or more of the aforementioned methods may be combined to effect improvement.

Ground connections

4.12.6 Wires running from protective devices (for example, gaps, grading rings, expulsion or protection tubes and surge arresters) to ground should be kept as straight and short as possible. Where bends are necessary they should be of large radii to keep the surge impedance as low as possible.

Overhead ground wires

4.12.7 Where overhead ground wires are used for protection of electric lines, a ground connection should be provided at the base of each pole from the overhead ground wire to a wire loop or a ground plate or to a driven rod, depending on the existing soil conditions. Use of wire wraps or pole butt plates is allowed only in areas of very low soil resistivity.

Measurement of ground resistance

4.12.8 Two methods of measuring ground resistance are:

a) *Three-electrode method.* In the three-electrode method, two test electrodes are used to measure resistance of the third electrode: the ground point. A self-contained source of alternating current and a battery-operated vibrator source type of equipment providing direct readings are available.

b) *Fall-of-potential method.* The fall-of-potential method involves an ungrounded alternating current source which circulates a measured current to ground. Voltage readings taken, of the connection to auxiliary grounds, allow use of Ohm's law to determine the ground resistance.

4.13 UNDERGROUND DISTRIBUTION SYSTEMS

4.13.1 Primary power distribution circuits in certain areas on and near aerodromes must be installed underground. Although underground installations cost more than overhead systems, radio interference problems or the proximity of the lighting facilities to areas of aircraft operations often require the use of underground distribution systems. Underground circuits may be installed by direct burial or by the pull-in method (pulling the cables through conduits). Direct burial of distribution circuits is usually less costly than installation in ducts (pull-in method), but because of the poorer protection, direct burial is usually used only for small loads where reliability requirements are low. Medium-voltage direct burial cable should be provided with a metal armour covering or shield for protection against mechanical injury. Where corrosion resistance is important, armoured cables may require a plastic or synthetic-rubber jacket over the armour. The underground distribution circuits used for aerodrome lighting facilities are pull-in circuits.

4.13.2 Details of the installation of underground distribution systems for visual aids facilities are given in Chapter 13 and characteristics of cable suitable for underground service are given in 0Chapter 14.

Chapter 5

TYPES OF ELECTRICAL CIRCUITS

Note.— This chapter examines circuitry as applicable to conventional incandescent lamped light fixtures. This may change with the application of light fixtures using LED (light emitting diode) design (refer to 0Chapter 12). IEC 61820 provides system design and installation requirements for constant current series circuits for aeronautical ground lighting.

5.1 ELECTRICAL CHARACTERISTICS

Electrical power for aerodrome lighting aids is almost entirely alternating current (AC) at 50 or 60 hertz. Both series and parallel circuits are used for lighting installations. At large aerodromes having lengthy runways and a large number of taxiways, the lighting design is primarily based on series circuitry. At smaller aerodromes with short runways, the installation may be based upon parallel circuitry. Parallel circuitry is also used for sequence-flashing lights for approach lighting systems, although these may, if necessary, be powered from a series circuit using conversion adaptors. Facilities such as apron floodlighting and obstacle lighting are primarily of a parallel circuit design.

5.2 SERIES CIRCUITS

5.2.1 The circuit elements of series circuits are connected in a string with the same current flowing in each element. The circuit is one continuous loop starting and ending at the output terminals of the constant current regulator.

5.2.2 In the case of a parallel circuit and fixed input voltage, the current in the circuit would vary with the connected load. The constant current regulators of a series circuit, however, maintain a constant current independent of the load on the circuit. Thus, the same current will flow in a long circuit as in a shorter circuit and will remain the same even if some of the lamps fail. A short circuit across the output of a constant current regulator is a no-load condition and an open circuit is an overload. In a simple direct-connected series circuit, a lamp failure causes an open circuit; hence, it is necessary to provide an aerodrome ground lighting (AGL) transformer, as part of the circuit design, to maintain continuity of the circuit with lamp failure. Where a single transformer is used to supply several light units, as shown in Figure 5-1, a by-pass device is incorporated to ensure continuity on the secondary side.

Advantages of series lighting circuits

5.2.3 Some of the advantages of series circuits for aerodrome lighting are:

a) all lamps are operating at the same current and thus at the same intensity;

b) a single-conductor cable of one conductor size and insulation voltage rating can be used throughout the circuit;

c) intensity control of the lights can be obtained over a wide range;

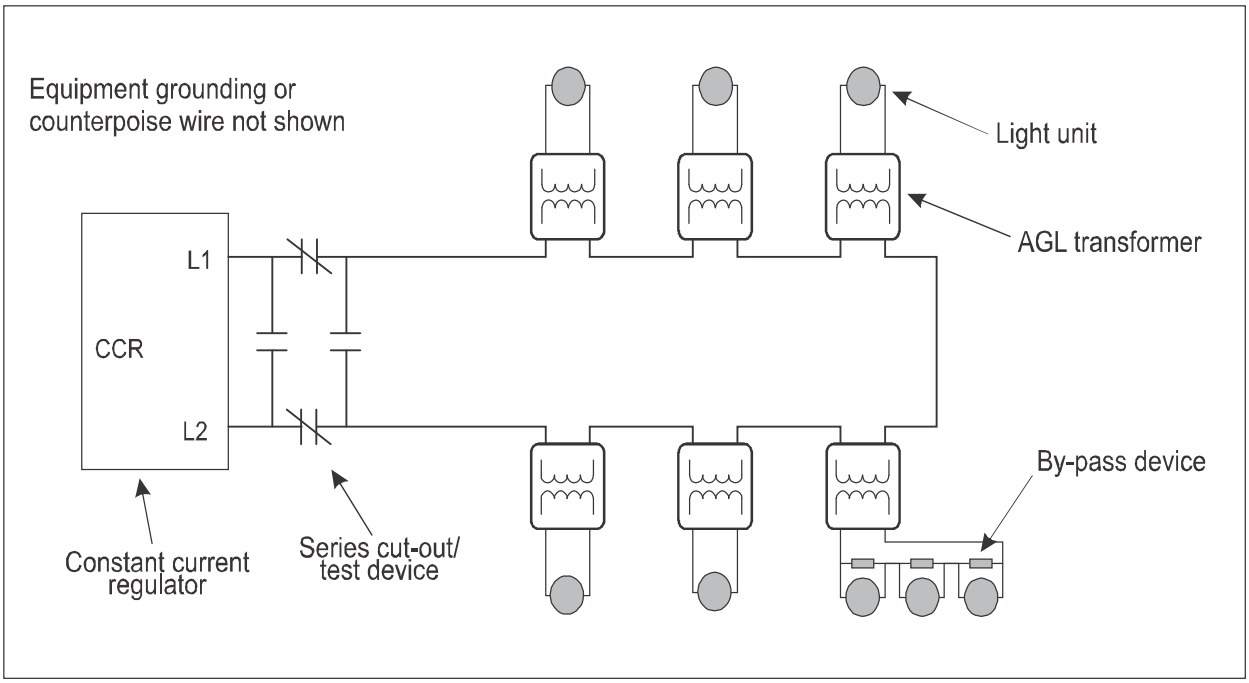

Figure 5-1. Series lighting circuit

d) the circuit may have a single ground fault at any point along the circuit without affecting the operation of the lights;

e) the lamps used for series circuits are of high-current and low-voltage. For example, a runway edge light may contain a 6.6 ampere, 12 volt lamp. The low voltage enables the use of a compact filament which acts as a point source and facilitates optical control through means of lensing; and

f) series circuits can more easily be applied to interleaving.

Disadvantages of series lighting circuits

5.2.4 The major disadvantages of series circuits when used for lighting are:

a) installation costs are high — the constant current regulator and AGL transformers add appreciably to this cost;

b) an open circuit fault anywhere in the primary side of the circuit makes the entire circuit inoperative and possibly may damage cable insulation or the constant current regulator; and

c) location of faults, especially open circuit faults, can be difficult.

5.3 PARALLEL (MULTIPLE) CIRCUITS

5.3.1 The use of parallel (multiple) circuits for aviation ground lighting is not recommended for large aerodromes and/or complicated lighting systems for the following reasons:

a) parallel circuits usually entail a much more expensive cabling installation than does a high-voltage series circuit;

b) accurate intensity balance between all lights in the pattern cannot be obtained easily; and

c) the mass burn-out of lamps in a circuit is much more likely due to the inability of average voltage regulators to control very rapid fluctuations of the voltage on the supply side.

5.3.2 The parallel circuit can be of advantage at small airports where maintenance is contracted from the local community in which electricians may not have the special training needed for series circuit installations.

5.3.3 In view of these considerations, parallel circuits should preferably be used when there are only a few fittings existing in the circuit and accurate intensity balance is not critical; for example, a short taxiway. Smaller aerodromes with short runways and taxiways can employ parallel voltage for the lighting.

Effects of faults

5.3.4 For parallel circuits, the light fixtures are connected across the lighting conductors; a burned-out lamp that produces an open circuit fault does not seriously affect the overall lighting system, but a short circuit fault will be an overload condition, and depending on which protective device (fused or circuit-breaker) operates, would make the system of lights inoperative. This is the opposite of the effect on a series circuit for which a short is not an overload condition.

Voltage characteristics

5.3.5 Most parallel-type light fixtures are designed for low voltage (less than 300 volts) and step-down transformers may be used where the feeder cables are at a higher voltage to minimize voltage drop from the vault to the load centre. The lights may be supplied from a single circuit connected between neutral and line voltage or by alternating between neutral and line voltage in a 3- or 4-wire distribution system. Intensity control of the lighting is typically by means of tapped transformers.

Advantages of parallel lighting circuits

5.3.6 Some of the advantages of parallel circuits (see Figure 5-2) for aerodrome lighting are:

a) lower cost of the installation, especially if voltage regulation and intensity control are not required;

b) more efficient utilization of electrical power;

c) easy to add to or reduce an existing circuit;

d) the circuits are more familiar to most people;

e) cable faults, especially open circuit faults, may be easier to locate; and

f) an open circuit may not disable the entire circuit.

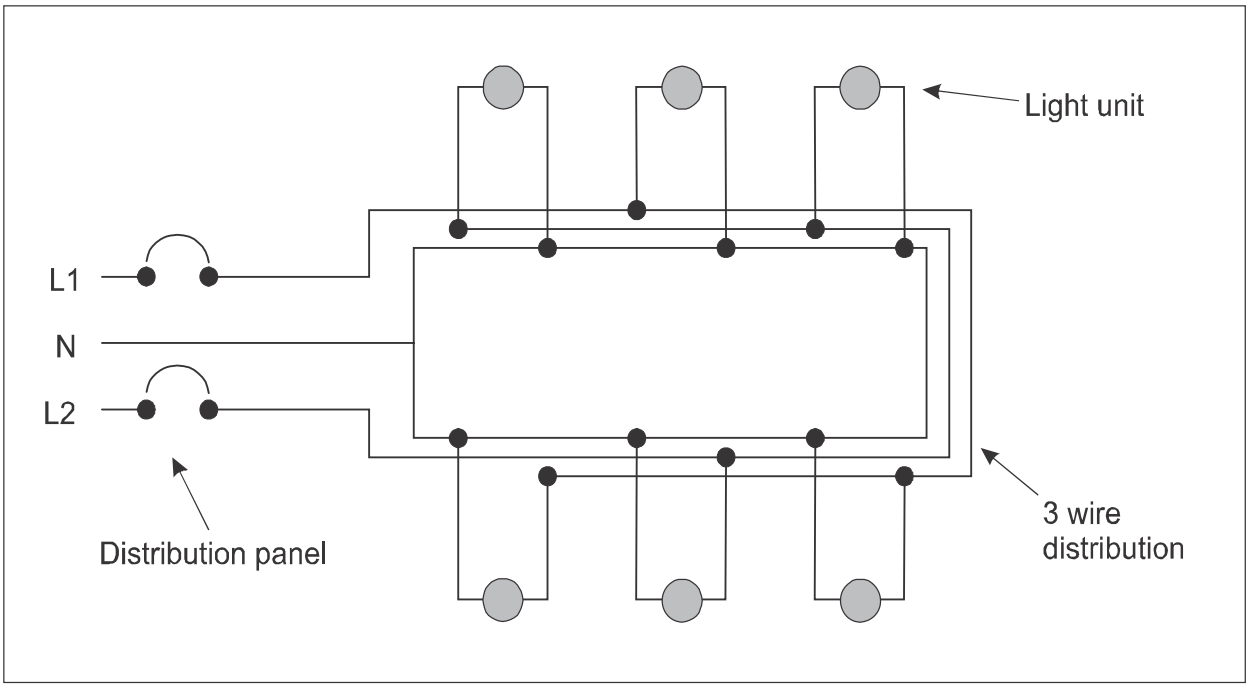

Figure 5-2. Parallel circuit

Disadvantages of parallel lighting circuits

5.3.7 Some of the major disadvantages of parallel circuits for aerodrome lighting are:

a) the intensity of the lights decreases with line voltage drop along the circuit. This may be misinterpreted if it is noticeable in a pattern of lights;

b) two conductors are required along the complete circuit, and larger conductors may be needed to reduce the line voltage drop;

c) lamp filaments are usually longer which may require larger optics and larger light fixtures;

d) intensity control, especially at the lower intensities, is more difficult to furnish accurately, or the equipment cost adds appreciably to the installation cost;

e) a single ground fault on the high-voltage feeder will disable the circuits; and

f) ground faults may be difficult to locate.

5.4 COMPARISON OF SERIES AND PARALLEL LIGHTING CIRCUITS

Acceptable lighting can be provided by either series or parallel circuits. Series circuits are usually used for aerodrome lighting systems because of the more uniform intensity of the lights and better intensity control. Such systems include most runway and taxiway lights and most steady-burning lights of approach lighting systems. Parallel circuits are used for most area illumination, individual or small numbers of visual aids, and power distribution. Aerodrome lighting systems usually using parallel circuits are apron floodlighting, other apron lights, sequence-flashing lights, special purpose visual aids such as beacons and wind direction indicators, some obstacle lights and electrical distribution circuits.

5.5 SERIES CIRCUITRY FOR AERODROME LIGHTING

Factors to be considered

5.5.1 If a series circuit is to be used, certain options on the equipment to be used should be evaluated. Often when one choice is made it reduces the options of other equipment. First, the complete circuit should be analysed for critical performance, reliability, economy of installations and operations, ease of maintenance and how the several types of equipment are interrelated. Some optional factors are the following items.

Choice of current

5.5.2 Equipment development has limited the available options of current to be used in a particular series circuit. Most aerodrome lighting series circuits are either 6.6 or 20 amperes at rated full intensity, although other currents have been used. The line power loss for a fixed cable conductor and length for 6.6 ampere circuits is about one-ninth that for 20 ampere circuits. Either value of current can be carried in 5 000 volt insulation cable by conductors of 4 mm diameter without excessive temperature rise.

5.5.3 The load on the regulator of series circuits should be at least 80 per cent of its rated capacity. A current of 6.6 amperes is commonly used for long circuits with smaller electrical loads and 20 ampere circuits have been used for larger loads and shorter cable lengths. For the range of regulator ratings, 6.6 amperes is used for ratings of 30 kW or less and 20 amperes for ratings of more than 30 kW. This transition point is based upon the full load operating voltage which should not be in excess of 5 000 volts. A 30 kW regulator has a voltage of 4 545 volts with 6.6 ampere current.

5.5.4 Based on the above, there is a tendency towards use of only 6.6 amperes for the series circuits. The primary reason being is the application of multiple circuits and interleaving. For example, the major portion of an approach lighting system may represent a load of 70 kW in which case a single constant current regulator rated at 70 kW and 20.0 amperes might be used. However, with the addition of circuits for interleaving, the load on each circuit may be less than 20 kW resulting in the use of regulators rated at 6.6 amperes. Similar use of lower rated constant current regulators occurs for large facilities, such as for runway centreline and touchdown zone lighting, which are composed of two or more circuits.

5.6 GROUNDING

All the equipment of the visual aids lighting facility should be bonded to earth. Refer to 0 Chapter 13 for a description of grounding provided for personnel safety.

5.7 STEP-DOWN TRANSFORMERS

The use of higher voltages for transmission of power reduces the line voltage drop and then step-down distribution transformers reduce the voltage to that which is more suitable for local distribution. Similarly, the power to aerodrome lighting circuits may be at a higher voltage on the feeder circuits and reduced by a step-down transformer at the beginning of the lighting circuit to match the desired circuit voltage. Of course, these feeder cables must be adequately insulated for the feeder voltage. Sometimes it is desirable to use long low-voltage cables for feeders, such as when these cables are already installed and available. The line drop can be reduced by using a higher voltage within the insulation limit of the cable on the feeders and reducing the voltage with step-down transformers at the input to the circuit or to the individual light fixtures. An example is to use 480 volts on the feeders and step-down to 120 volts at the lighting circuit. Use of lamps in the voltage range of 6 to 30 volts in aerodrome light fixtures is usually more effective than the use of 120 or of 240 volt lamps. Thus, when step-down transformers are to be used for individual lights or for a small group of lights in a barrette, consideration should be given to choosing lights which use low-voltage lamps. Unless individually fused, step-down transformers used as indicated above should be of the high-reactance type so that a short circuit in that part of the lighting system fed by one transformer will not cause failure of the entire system.

5.8 SERIES CUT-OUT

For series circuitry, a device termed a series cut-out, as shown in Figure 5-3, can be installed at or inside the constant current regulator (CCR) to facilitate maintenance and troubleshooting activity. As shown in Figure 5-4, with the cover plate of the cut-out inserted, the CCR is connected to the series loop circuit. When the cover plate is removed, the CCR output is isolated from the airfield series loop for maintenance personnel safety. Both the output of the CCR and the input to the loop circuit are shorted. A second cover plate can be inserted so as to provide contact points to take insulation resistance measurements.

Figure 5-3. Series cut-out device receptacle (source: Liberty Airport Systems)

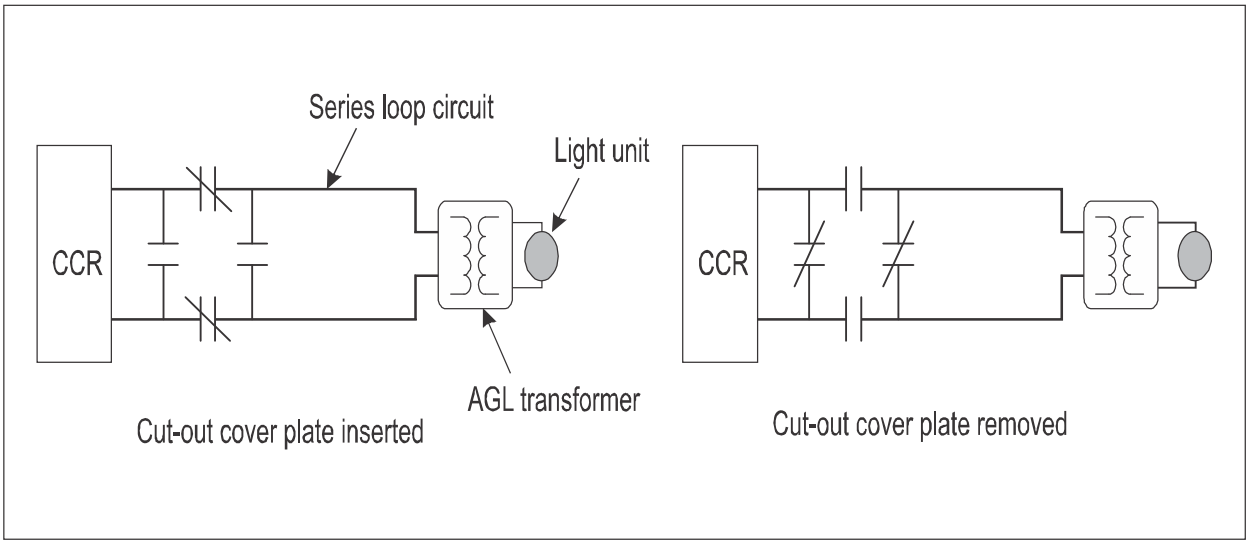

Figure 5-4. Series cut-out device (diagram)

Chapter 6

CIRCUITRY

6.1 INTERLEAVING OF AERODROME LIGHTING CIRCUITS

6.1.1 Paragraph 8.2 of Annex 14, Volume I, specifies that for a runway meant for use in runway visual range conditions less than a value of 550 m, the electrical systems for the power supply, lighting and control of the lighting systems be designed so that the failure of one circuit will not leave the pilot with inadequate visual guidance or misleading information. To this end, every approach and runway lighting system should be interleaved with at least two circuits. Examples of circuit interleaving to improve integrity are shown in Figure 6-1 to Figure 6-5. Each circuit in an interleaved system should extend throughout the whole of the service (e.g. runway length) and be so arranged that a balanced symmetrical lighting pattern remains in the event of failure of one or more of the circuits.

6.1.2 Care should be taken to properly label cables and AGL transformers where interleaving is applied to the installation.

6.2 ARRANGEMENT IN THE ELECTRICAL VAULT

6.2.1 Interleaving is often thought of as just the connections made in the field. It is recommended that the principle of interleaving be carried to the electrical vault and beyond. As shown in Figure 6-1, the circuits and associated regulators are fed from separate buses such that each circuit is supplied from a separate CCR and arrangement is made such that a spare CCR is available to be placed in operation within a minimum amount of time. The buses are provided with automatic tiebreakers for use in case of failure.

6.2.2 As a further means of assuring availability in case of failure, arrangement is made to enable switching to a spare regulator, as shown in Figure 6-2. This method may be used where the regulator consists of the regulating component and input/output transformers. In the case of regulators that consist of only the regulating component, a rack-mounted or plug-in design is used and availability is achieved by use of a spare regulator that can be readily installed in place of the failed regulator.

6.3 PROVISION OF INTERLEAVING

Note — Interleaving should be provided for those lighting facilities listed in Annex 14, Volume I, Table 8-1 and as indicated in Annex 14, Volume I, 8.2.1.

Approach lighting system

6.3.1 The interleaving of approach lighting Type A (distance coded centreline) and Type B (barrette centreline) is illustrated in Figure 6-3. Both the Category I system and supplemental lighting for Category II/III operations are shown.

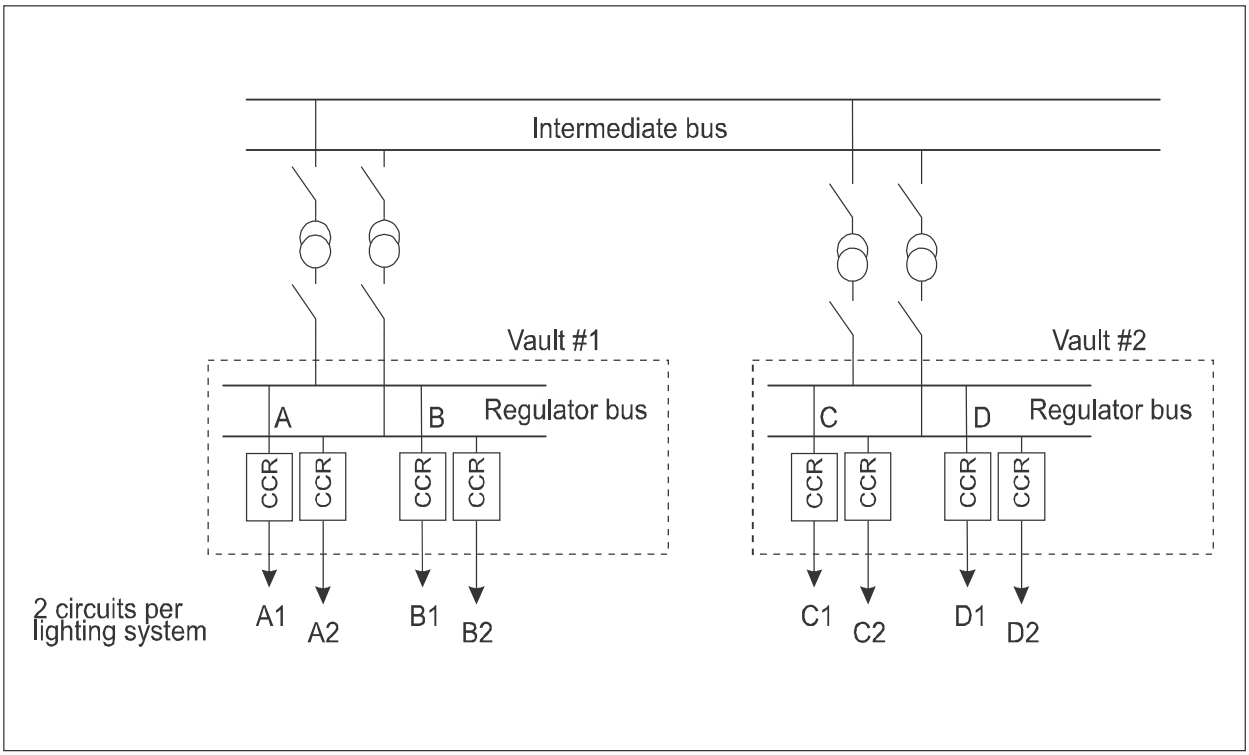

Figure 6-1. Provision of interleaved circuits

6.3.2 Threshold lights are composed of those associated with the runway edge system and those associated with the approach lighting system. The threshold lights for the runway are runway end/threshold lights with red and green signals (facing opposite) at each light station. In Figure 6-3, six runway threshold lights are shown for a Category I installation. A Category II/III installation would have additional runway end/threshold lights (please refer to Figure 5-22 in Annex 14, Volume I). The runway end/threshold lights are usually interleaved as part of the runway edge lighting system. Interleaving for the approach lighting system involves the unidirectional green threshold lights and the wing bar lights.

Runway centreline and touchdown zone lighting systems

6.3.3 Annex 14, Volume I, requires that runway centreline lights show variable white to a distance of 900 m from the threshold, then alternating variable white and red from 900 m (or from the mid-point of the runway) to 300 m from the runway end after which only red is shown to the pilot. Figure 6-5 (b) illustrates the interleaving for the first white only portion of the system. Similar interleaving would be used for the final all red portion.

6.3.4 Figure 6-4 illustrates various means to provide interleaving for the coded white/red portion of the system and selection is that prescribed by the local authority. Where it is necessary to preserve the colour coding, Figure6-4 (a) should be used. However, this interleaving would increase the spacing in failed segments to three times the normal value. Figure 6-4 (d) illustrates an interleaving arrangement where lights are installed with 7.5 m spacing and couplets of the same colour are installed. Figure 6-4 (b) does not preserve the coding (with circuit failure the lights are either all red or all white), but does maintain an acceptable spacing for provision of a pattern of lights for centreline guidance (the spacing is doubled with circuit failure).

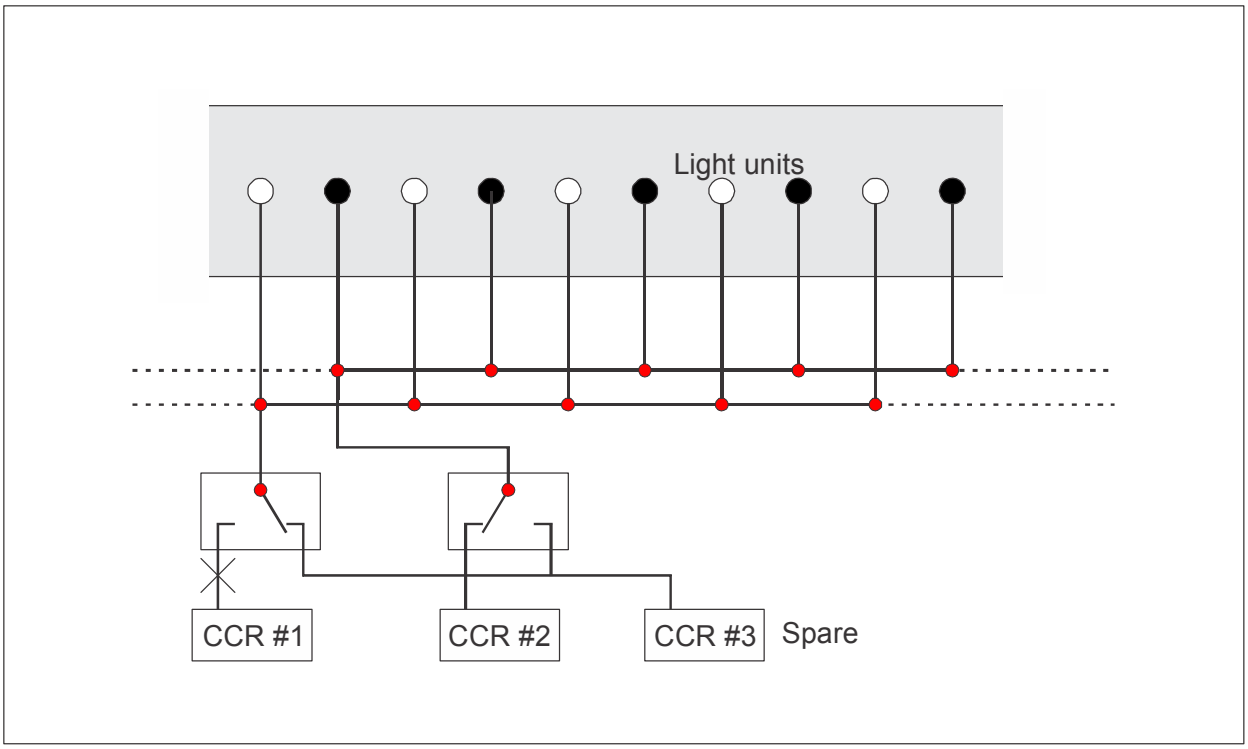

Figure 6-2. Use of a spare regulator

6.3.5 Figure 6-5 also illustrates the interleaving of runway touchdown zone lights. The interleaving of Figure 6-5 (d) is preferred because it maintains the longitudinal spacing between barrettes upon loss of one circuit.

Taxiway centreline lighting

6.3.6 Taxiway centreline lighting circuits may be interleaved on those parts of the taxiway system that are considered as essential in category II/III conditions but, for economic reasons, a single circuit may be used for other taxiways.

6.3.7 Where the taxiway centreline lighting is colour coded green/yellow to indicate the distance of the aircraft exit from a runway in relation to the ILS critical area, the system may be interleaved by one of the methods illustrated in Figure 6-4 as directed by the local authority. As in the case of runway centreline lighting, Figure 6-4 (a) preserves colour coding but leaves failed segments that are three times the normal light spacing. Figure 6-4 (b) causes an increased spacing which is twice the norm, but also does not preserve the coding such that the exiting pilot would see either a line of green or yellow lights. The method of Figure 6-4 (c) preserves minimal spacing but is more costly .The method of Figure 6-4 (d) is an alternative which preserves the colour coding and leaves a normal spacing if the lights are installed at half the normal spacing (e.g. at 7.5 m instead of 15 m).

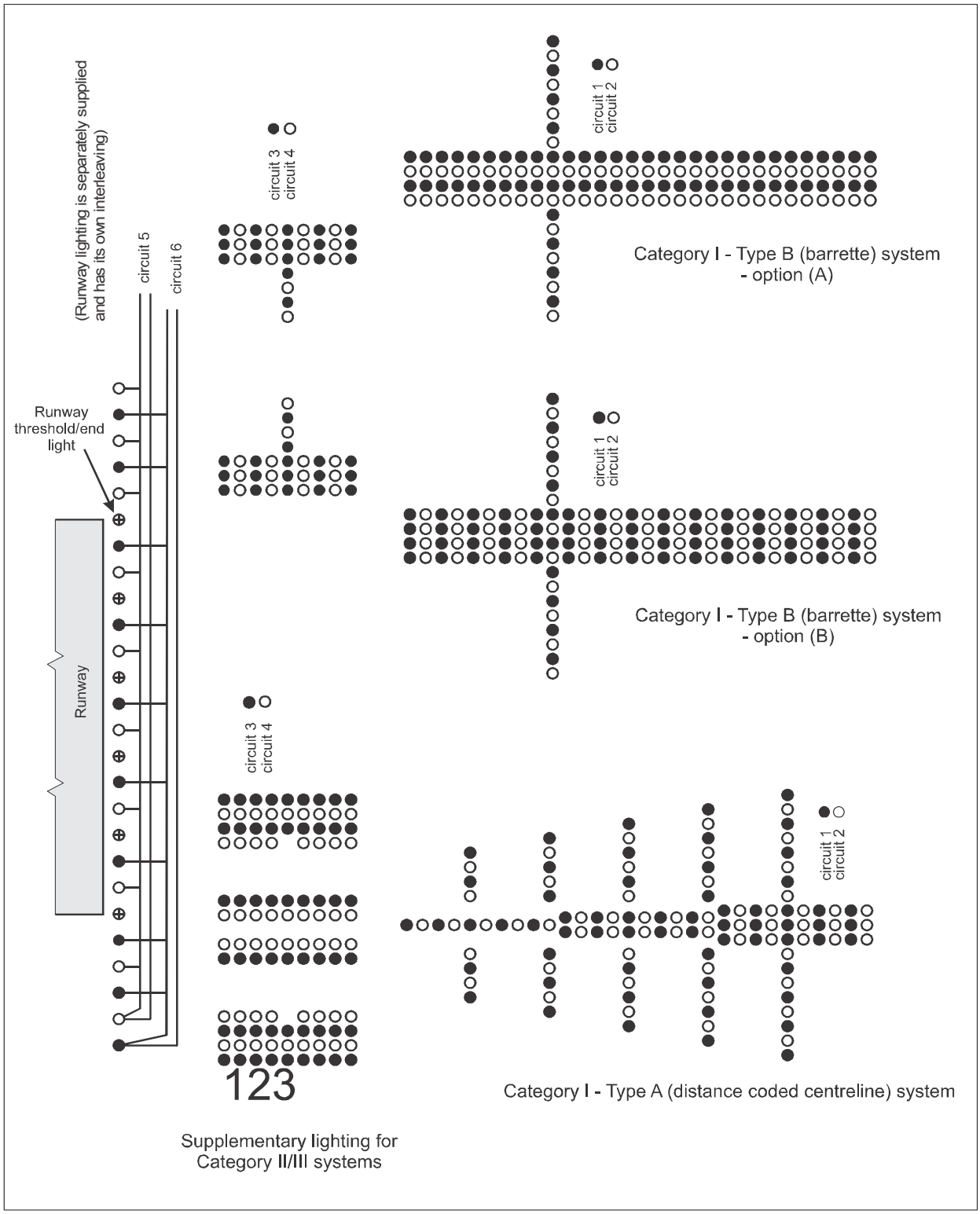

Figure 6-3. Precision approach lighting system interleaving

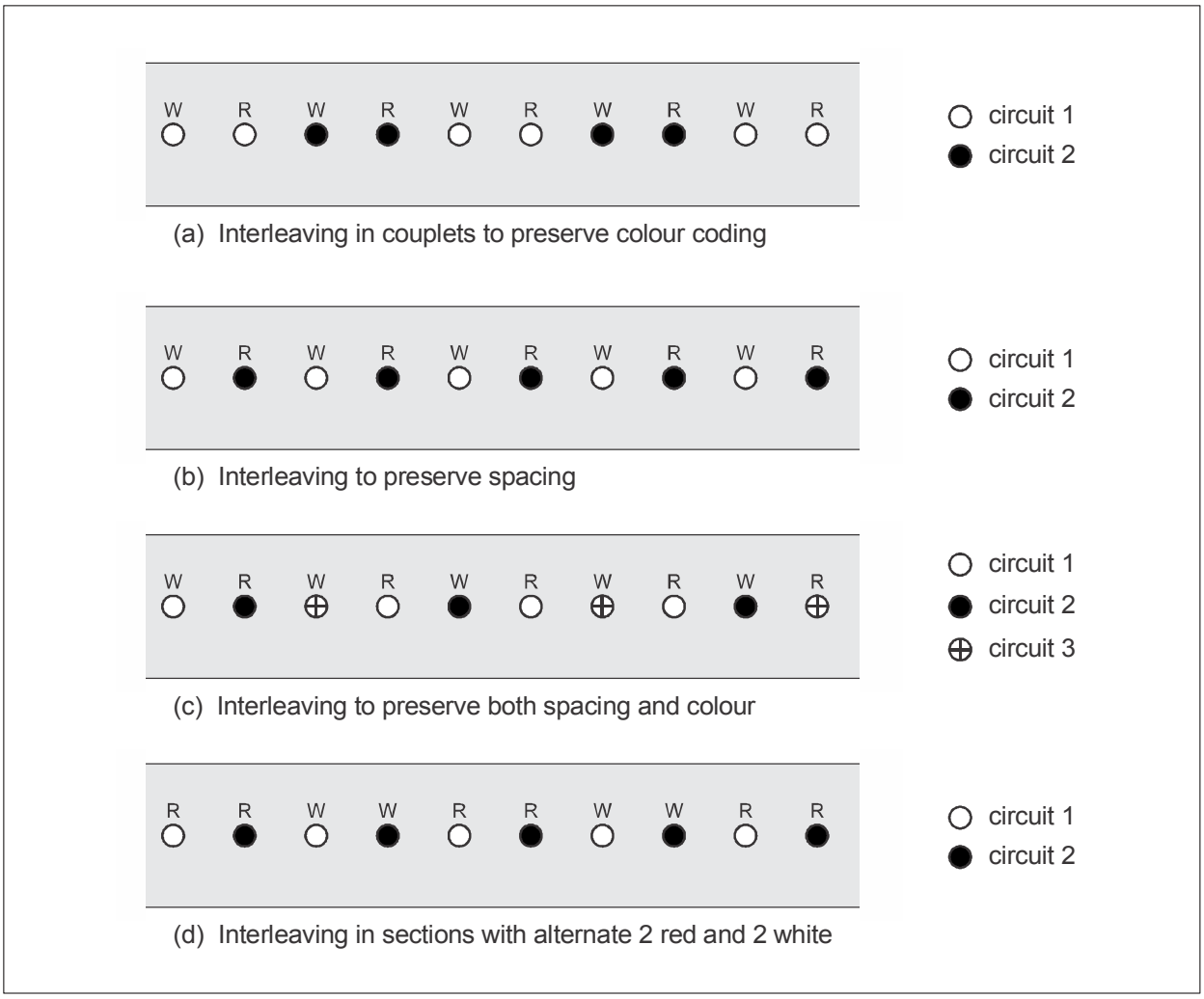

Figure 6-4. Interleaving of colour coded lights

Stop bars

6.3.8 Stop bars should be controlled independently of each other and of the taxiway centreline lights. The electrical circuits should be interleaved so that all of the lights of a stop bar will not fail at the same time.

6.3.9 Stop bars are normally associated with taxiway centreline lead-on lighting. The green lead-on lighting provides a confirmation of voice instruction for the aircraft to proceed once the stop bar is turned off. When the stop bar is illuminated, the taxiway centreline lights installed beyond the stop bar are extinguished for a distance of at least 90 m and vice versa. Control and monitoring of the lead-on lights can be accomplished through means of addressable switches whilst the power supply and possible interleaving is that of the taxiway centreline lighting. Should the supply to the lead-on lights be other than a dedicated circuit, it is necessary to ensure that the circuits to which these lights are connected will be active when the lead-on lighting is required.

6.3.10 Further information regarding stop bars is provided in the *Aerodrome Design Manual* (Doc 9157), Part 4.

6.4 POSSIBLE PROVISION OF INTERLEAVING

Note.— The following facilities are not normally interleaved, but are described herein should interleaving be required by the local authority.

Visual approach slope indicator systems

6.4.1 Visual approach slope indicator systems should have two circuits per runway end when operated with an ILS system.

6.4.2 Normally, the PAPI is installed on the left side of the runway. When the visual approach slope indicator system is a full PAPI or T-VASI and installed on both sides of the runway, the power to all light units on one side of the runway should be supplied by the same circuit. This arrangement ensures that should one circuit fail a complete pattern will be retained on the other side of the runway.

6.4.3 When approach slope indicators are installed on only one side of the runway as with the PAPI and AT-VASI, some of the lamps in each light unit should be connected to one circuit and the remainder to the other circuit in order to maintain the integrity of the pattern. Loss of one of the lamps within a light unit will result in reduced intensity. Visual approach slope indicator systems should be de-energized when a misleading signal results from the failure of a complete light unit.

Runway holding position signs

6.4.4 Where interleaving is provided, runway holding position signs should be installed such that separate circuits are used for the signs on each side of the taxiway.

Rapid exit taxiway indicator lights

6.4.5 The rapid exit taxiway indicator lights (RETIL) system is composed of a pattern of in-pavement fixtures used to indicate the approach to a runway exit. In as much as the system has a small quantity of fixtures and each is necessary for the distance coding, the RETIL system is not provided with interleaving but has a single circuit that is fed from a separate constant current regulator.

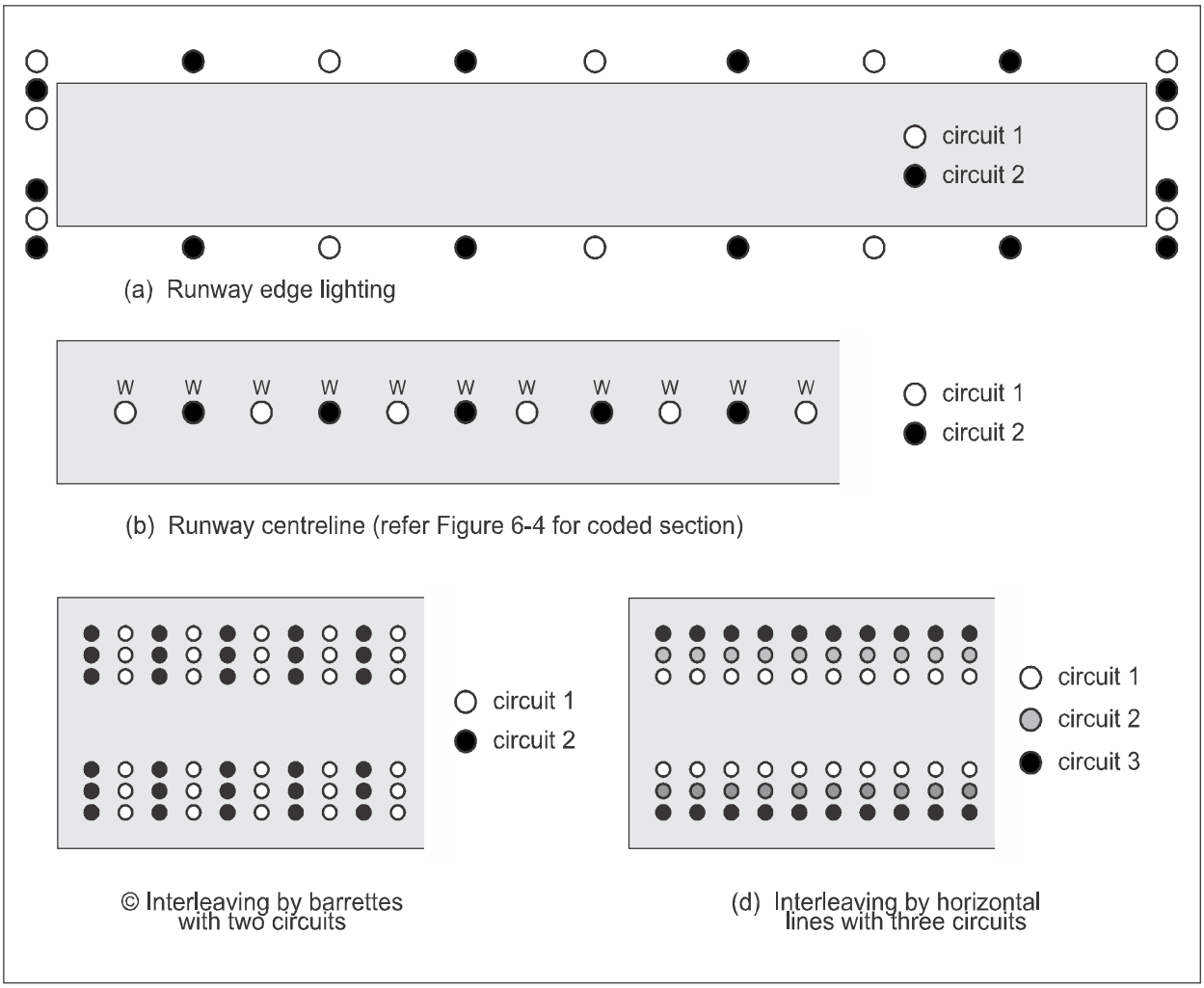

Figure 6-5. Runway edge, centreline and touchdown zone lighting

6.4.6 The functionality of the RETIL system is dependent upon the number of lights in consecutive barrettes and the failure of one light within a barrette results in a malfunction of the system. Therefore, it is recommended that the system be provided with a means to automatically turn off the entire system should there be a loss of a single light unit.

Runway guard lights

6.4.7 Runway guard lights (RGL) should be provided with separate circuitry from that of the associated runway or taxiway. They should not be connected for supply from the adjacent taxiway or runway circuit for reason of an incompatibility of brightness level, as well as that the runway guard lights may be required when runway or taxiway lighting is not illuminated.

6.4.8 Where interleaving is provided, the RGL configuration A (elevated) are interleaved such that one circuit is used for each side of the hold position.

6.4.9 Where interleaving is provided, the RGL configuration B (in-pavement) are interleaved with the connection made in couplets of lights such that the alternate flashing characteristic is maintained. For example as, c1, c1, c2, c2, c1, c1, c2, c2.

Taxiway/runway lead-in lights

6.4.10 Green taxiway/runway lead-in lights need not be interleaved as the function of this lighting is to provide a confirmation of voice instruction to proceed. However, if interleaved, they may be provided with two circuits, as for a runway centreline of single colour, as shown in Figure 6-5 (b).

6.4.11 Where the taxiway lead-in lights are provided with colour coding, additional circuits may be required to preserve the colour coding with loss of a circuit.

6.5 SELECTIVE SWITCHING OF TAXIWAY CIRCUITS

In order to provide route guidance to pilots, taxiway centreline lighting should be circuited to permit selective switching of segments of the taxiway lighting system on the airfield. This capability may be obtained by using a constant current regulator for each segment or by connecting several segments to a single regulator and using relays, either in the field or at the regulator output, to energize the desired segment(s). For ATS, the means to cause switching of segments may be accomplished in several ways, such as:

a) the use of an individual control switch/button for each segment. The control switches should be located on a facsimile diagram on the airport control panel so that ATC staff can visualize the route that has been selected. This may also be accomplished with use of a touch-sensitive screen which presents a diagram of the airport routing system;

b) interconnecting the controls so that actuating a single switch on the control panel will cause all segments of a designated route to be lighted; and

c) using a computer programmed to automatically select and light the optimum route after the operator designates the runway exit to be used and the gate destination for the aircraft.

Chapter 7

CONSTANT CURRENT REGULATORS

Note.— Constant current regulators are addressed in IEC 61822.

7.1 TYPES OF CONSTANT CURRENT REGULATORS

7.1.1 The electrical power for most aerodrome ground lighting circuits (series circuit) is supplied by constant current regulators (CCRs) because this facilitates constant light output over long distances, as is the case for aerodrome runways. The regulators are designed to produce a constant current output that is independent of variations in the circuit load and input voltage of the power source. They are also designed to provide two or more output currents when dimming of the lights is required. Some types of constant current regulators used for aerodrome lighting are as follows.

Moving coil regulators

7.1.2 Moving coil regulators have been used for many years to supply power to series lighting circuits, in particular that of street lighting systems. This regulator has separate primary and secondary coils, which are free to move with respect to each other thus varying the magnetic leakage reactance of the input and output circuits. The reactance is automatically adjusted to a value which, when added to the load impedance, permits a constant current to flow. The desired output current sets up a force of repulsion which floats the moving coil in the position which produces this current. A state of mechanical equilibrium is attained such that the force of repulsion exactly balances the weight of the moving coil. Adjustment is possible through means of a counterweight as shown in Figure 7-1. Any change in load or input voltage is immediately counteracted by a movement of the floating coil to restore mechanical/electrical balance. Intensity control is obtained through the use of a tapped transformer across the output of the regulator. The main disadvantages of moving coil regulators are the mechanical movement of the coils and the low power factors for loads less than rated load. For a load of 50 per cent of the rated load, the power factor may be 75 per cent or less. Because of the mechanical control, moving coil regulators must be precisely levelled and isolated from vibration.

Monocyclic square/resonant network regulators

7.1.3 One static type (no moving parts) constant current regulator for series circuits is the monocyclic square regulator. The current regulating network usually consists of two inductive coils and two capacitors, each of equal reactance (resonance) at the power frequency, arranged in a bridge type circuit. With such a network, the secondary current is independent of the impedance of the load. Intensity control can be provided by a tapped input or output transformer or by continuously variable input transformer. The advantages of this type of regulator are no moving parts and high power factor. The disadvantages are lack of compensation for variations in input voltage and adverse effects on the regulation caused by loads which cause high harmonic frequencies in the resonant circuit, such as open circuited secondaries of series isolating transformers and gaseous-vapour lamps (see Figure 7-2).

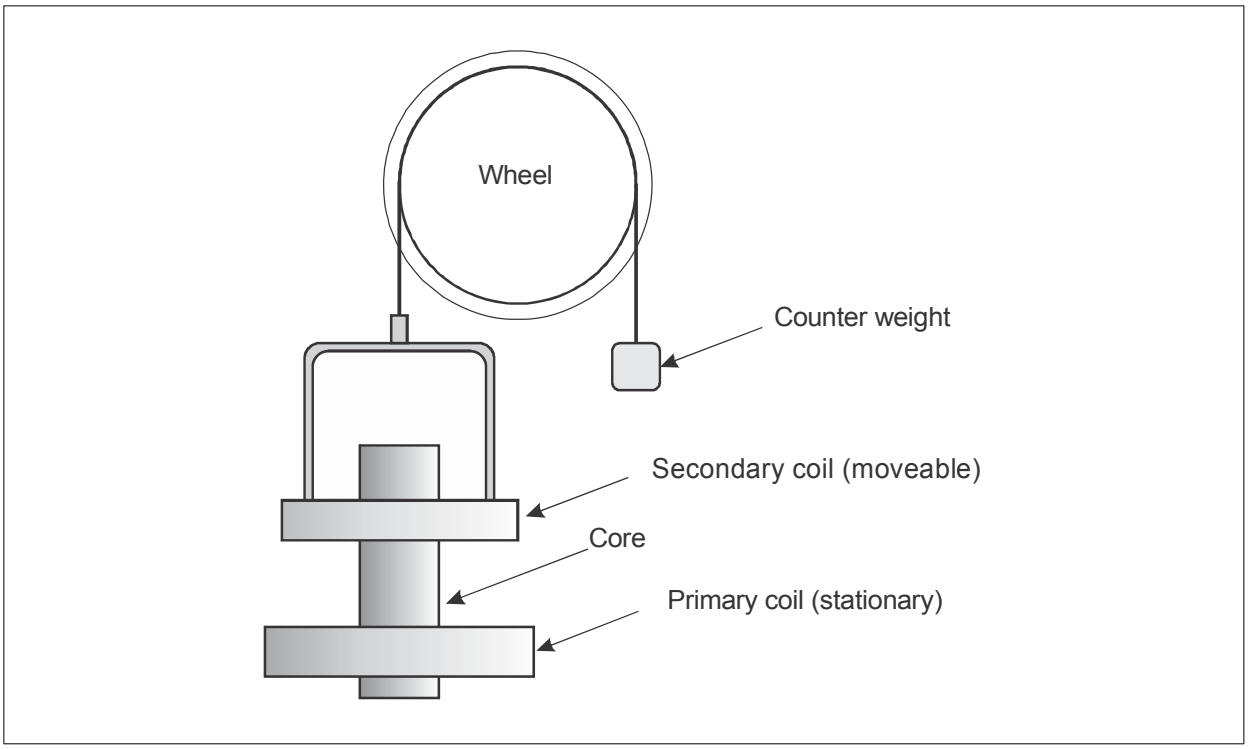

Figure 7-1. Moving coil regulator

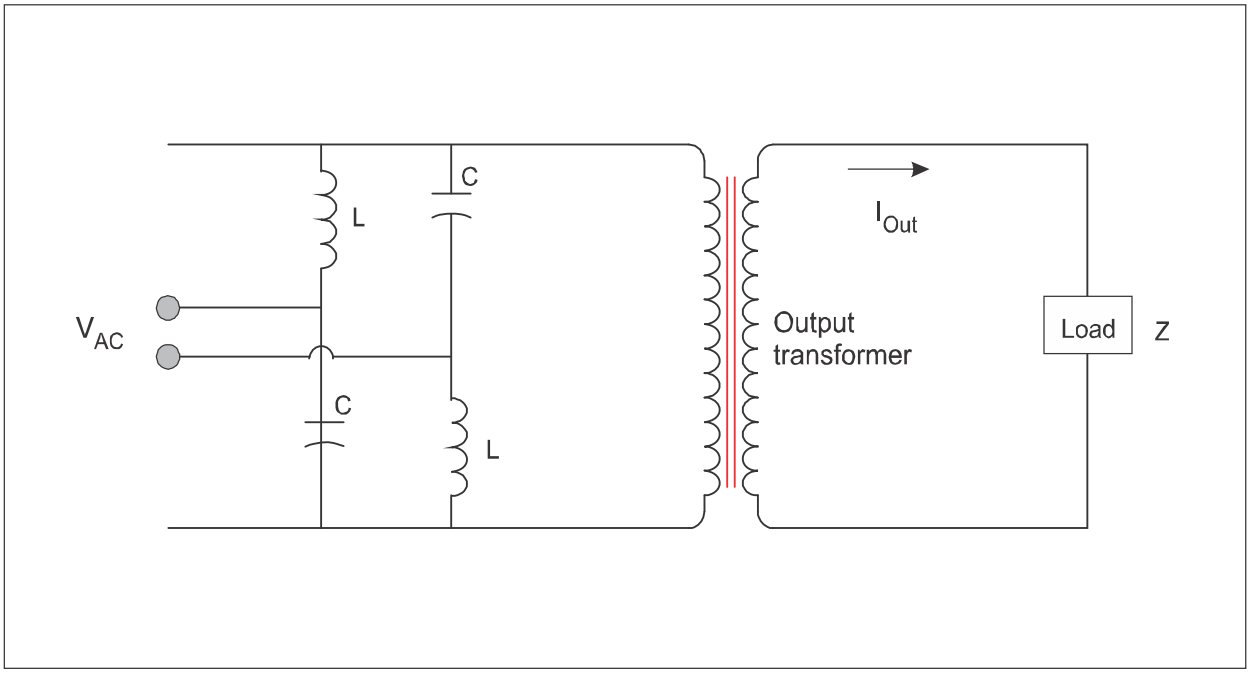

Figure 7-2. Resonant network regulator

Saturable reactor regulators

7.1.4 The saturable reactor CCR consists of two saturable reactors, a main isolation transformer, control circuitry and an output transformer. The AC reactance of the input saturable reactors is automatically adjusted through means of a DC input current with the result that the reactors in combination with the output transformer acts as a voltage divider which regulates the load current. By sensing the output current from the regulator, adjustment may be made to compensate for primary voltage variations and for harmonic frequencies caused by open circuited secondaries of isolating transformers. This compensation provides improved current regulation and prevents shortening of lamp life from above rated secondary current (see Figure 7-3).

Solid state control constant current regulators

7.1.5 These regulators use AC solid state circuits for controlling the transformer leakage reactance. This technique permits the use of low control levels to obtain constant current from regulators with the electrical characteristics of constant voltage, series-resonant circuits. The solid state controls enable fast response, high power factor and compact regulators with easy maintenance of the regulator controls.

7.1.6 The solid state regulator utilizes an SCR (thyristor) driver. As shown in Figure 7-4, the SCRs are triggered so as to "chop" the supply voltage and thereby reduce the effective RMS value of the current.

Ferroresonant regulator

7.1.7 The ferroresonant CCR is essentially the resonant-network CCR with improvements to overcome the disadvantages of lack of compensation for input voltage variation and reduction of harmonics from the field circuit. The control signal is varied by means of a digital signal processor (DSP) to maintain the output current for the desired brightness step.

7.1.8 The reaction time of the ferroresonant CCR is faster than with the solid state CCR, as the output current is regulated directly with the control circuit and control windings. As a result, the output current is not affected in any way by flashing or switching loads. The DSP and the control circuit can quickly and accurately respond to input or output changes in order to maintain a constant current. Because of the size and the customized nature of the ferroresonant transformer, however, overall package size, weight and cost are greater than the solid state CCR (see Figure 7-5).

Pulse width modulation regulator

7.1.9 One of the most promising technologies for development of power supplies for visual aids lighting is the use of pulse width modulation (PWM), which has gained increasing popularity for industrial variable speed drives and, if properly designed, can provide extreme accuracy and unprecedented control. It is applied for LED lighting on airfields.

7.1.10 The basic design of a PWM power circuit is with DC rectification of the incoming supply. The DC power is smoothed and filtered, and then passed to an inverter stage. The inverter stage converts the DC power to an AC voltage, but at a very high frequency. The high frequency AC is then switched with insulated gate bipolar transistors (IGBTs) to develop the desired output waveform. With a new and innovative design, power factor correction can be continuously implemented with a boost pre-regulator and a high-performance inverter. High power factors approaching unity are possible at very low loads. The output current from the regulator would be with very low distortions and with minimal harmonics.

7.1.11 With suitable firmware and hardware interface changes, the same digital signal processor (DSP) used for the ferroresonant and SCR type regulators can be used to control the PWM CCR (see Figure 7-6).

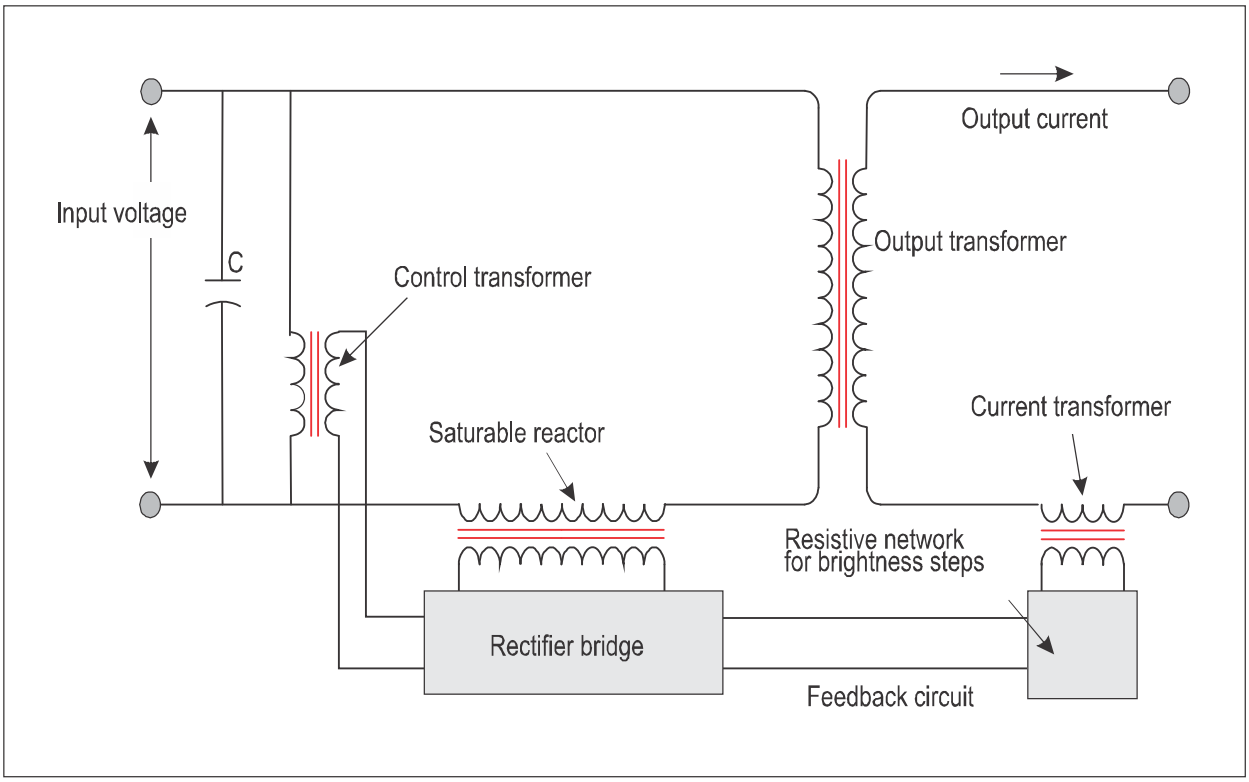

Figure 7-3. Saturable reactor regulator

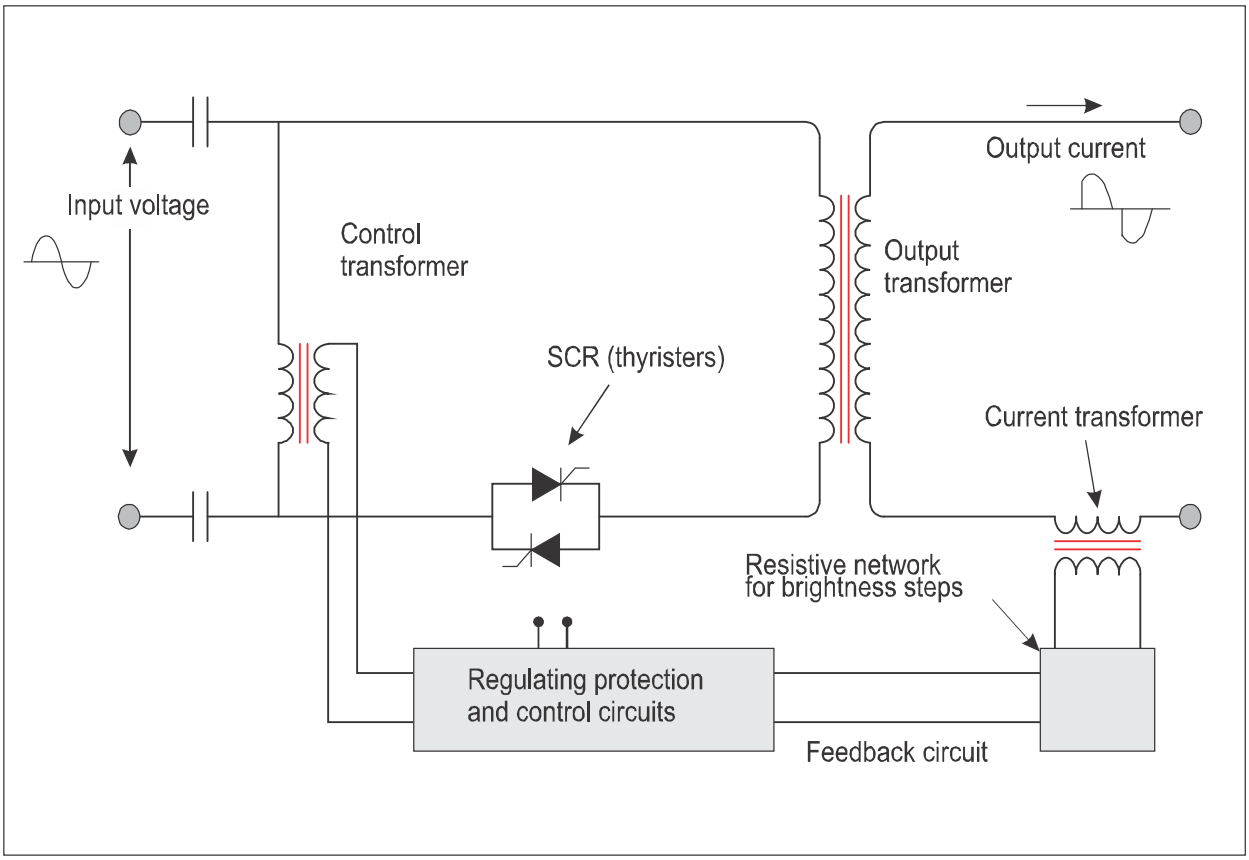

Figure 7-4. Solid state (SCR) regulator

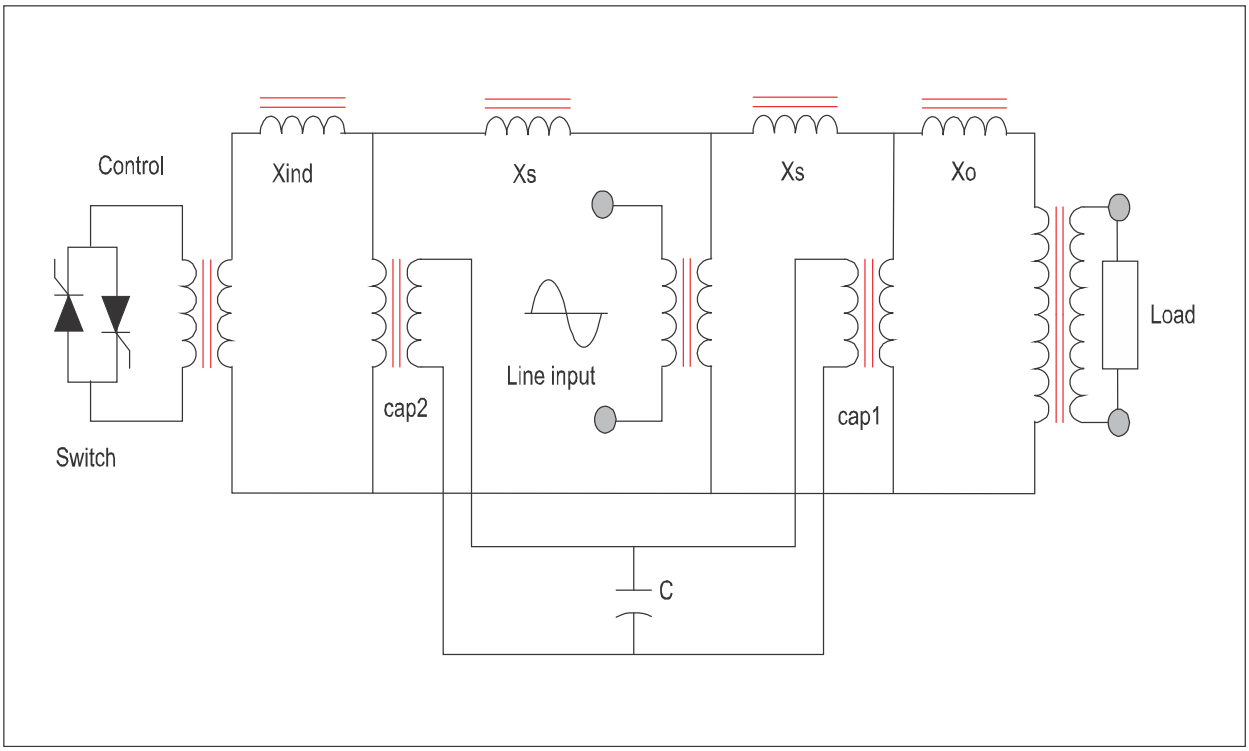

Figure 7-5. Ferroresonant regulator

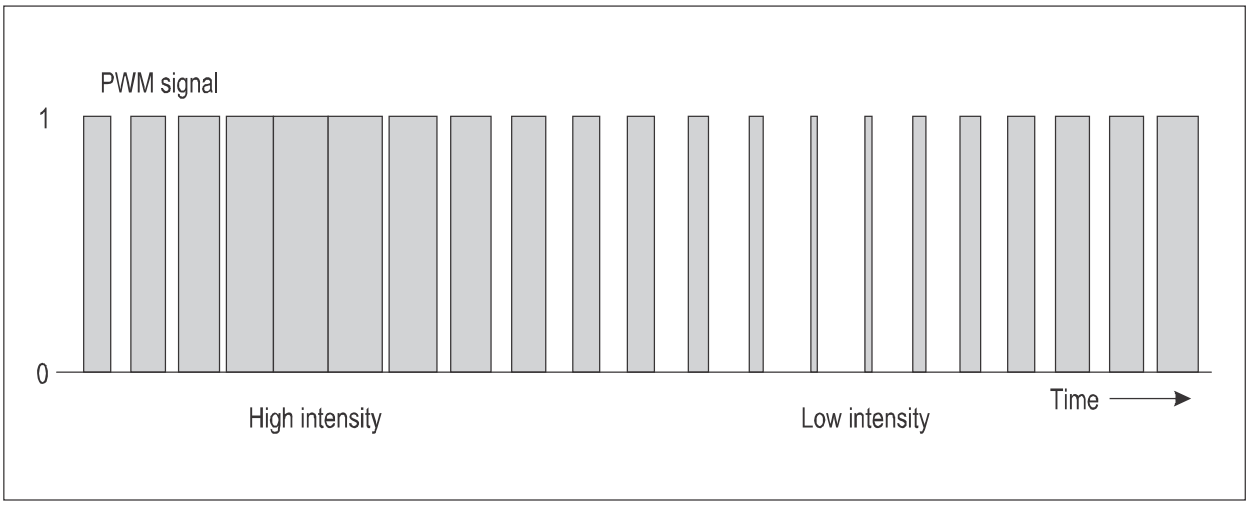

Figure 7-6. Delta modulation to generate PWM signal

7.1.12 The PWM design promises a number of advantages over existing CCR designs:

a) reduced package size, smaller than ferroresonant technology;

b) microsecond response time compared to millisecond with SCRs;

c) lower harmonics and near unity power factor at all operating levels; and

d) stable output possible for input droop conditions.

7.2 OPERATING CHARACTERISTICS OF CONSTANT CURRENT REGULATORS

Constant current regulators supplying power to aerodrome lighting circuits should have the following capabilities:

a) maintain a constant current output within ±2 per cent for any load from one-half to full load with up to 30 per cent of isolating transformers having open circuit secondaries;

b) indicate a grounding fault on the circuit while permitting the circuit to operate normally when a single ground fault prevails;

c) have a high degree of reliability and therefore have no moving parts;

d) incorporate an open circuit device which locks out the primary voltage within two seconds and requires resetting of the regulator;

e) respond to circuit changes within fifteen cycles;

f) incorporate a security device that sets the regulator out-of-service or assures a reduction of the current in case of an over-current;

g) provide the required number of intensity settings or a continuously variable control as required. The regulator should be designed so that the intensity setting can be changed without de-energizing the regulator;

h) electrically isolate the primary power circuit from the secondary lighting circuit;

i) dynamic characteristics which enable quick restart in case of voltage failure in accordance with the switch over time requirements of Annex 14, Volume I, Table 8-1; and

j) operate continuously at full load in ambient temperatures between –40°C and +55°C and relative humidity between 10 and 100 per cent and at altitudes up to 2 000 m.

7.3 RATING CHARACTERISTICS OF CONSTANT CURRENT REGULATORS

7.3.1 The following are examples of rating characteristics of constant current regulators.

Power

7.3.2 Output (secondary) loads between 1 and 70 kilowatts. Many sizes in this range are available.

Secondary (output) current

7.3.3 The current levels of 6.6 and 20 amperes are most common. Units supplying 6.6 amperes for loads up to and including 30 kilowatts and 20 amperes for loads of more than 30 kilowatts are often used. In as much as the trend is to use the 6.6 amperes, the lists below for brightness steps are only with respect to 6.6 ampere operation.

Current step values

7.3.4 Table 7-1 lists typical current steps for 3-step and 5-step constant current regulators. Additional steps may be used depending upon local practice. When considering the standard 6.6 ampere circuit, it is assumed that current less than 2.3 amperes is below the visible light level and therefore considered as an "off" condition for the pilot. A setting at 80 per cent of full brilliancy is sometimes included to save power and increase lamp life, detracting little from full visible power under normal weather conditions. For LED lighting, with PWM power supplies, the steps are defined by the degree of modulation rather than a current level.

Table 7-1. Nominal CCR output current range

Style	*Current step*	*Nominal output (RMS amperes)*	*Allowable range (RMS amperes)*
3-step CCR	3	6.60	6.50 – 6.70
	2	5.50	5.40 – 5.60
	1	4.80	4.70 – 4.90
5-step CCR	5	6.60	6.50 – 6.70
	4	5.20	5.10 – 5.30
	3	4.10	4.00 – 4.30
	2	3.40	3.30 – 3.50
	1	2.80	2.70 – 2.90

Frequency

7.3.5 As defined by the frequency of the primary power, usually 50 or 60 Hz.

Primary voltage

7.3.6 Primary voltages of 240 volts for sizes up to 30 kilowatts and 2 400 volts for sizes of 10 to 70 kilowatts are used by one State. Other primary voltages may also be used. The tendency is towards a medium level of primary voltage such as 600 volt for which equipment of lesser specialization is required, such as input breakers.

7.4 OPEN CIRCUIT AND OVER-CURRENT PROTECTION

The connections in series circuits should be carefully made to assure circuit continuity and to prevent development of ground faults. An open circuit fault in the primary will prevent operation of all lights in that circuit and can be damaging to the regulator itself. For this reason, constant current regulators are equipped with open circuit protection. Transients generated by switching of circuits with high inductance may cause tripping of the regulator over-current protection. It is to be noted that the over-current protective device will normally not react to a short circuit fault in a series-type circuit. It is for this reason that staff should have special training prior to working on series lighting.

Chapter 8

LOAD CALCULATIONS/REGULATOR SIZING

8.1 GENERAL

This chapter examines the calculation of circuit loading for the purpose of selecting a size of constant current regulator. In some cases, the designer might simply refer to a previous similar installation in order to select the regulator rating, however, this should be checked through means of calculation. The lighting facility, which was previously installed with only a 4 kW constant current regulator, may, for a new installation, require a 7.5 kW regulator due to the use of more lengthy feeders. The calculation of regulator loading must take into consideration the lamp load, lamp tolerances, isolating transformer efficiencies, secondary cable losses, primary cable losses and feeder cable losses.

Note.— Software programmes are available from manufacturers.

8.2 TYPES OF LOADING

8.2.1 The following types of loads are considered in the calculations:

a) *Lamp load.* The nominal rating of the lamps.

b) *Lamp load referred to the primary.* The lamp load, plus lamp tolerance, plus isolating transformer efficiency, referred to the primary side of the transformer. Lamps are manufactured on a production scale and exact wattages cannot be guaranteed to be identical to that of the marked rating. The tolerances of Table 8-1 can be expected.

Table 8-1. Lamp tolerances

Rated wattage (watts)	*Tolerance (per cent)*	*Possible actual wattage (watts)*
30	8	32.4
45	8	48.6
200	7	214.0
250	6	265.0

c) *Secondary lead load.* The resistive load of the secondary lead from the isolating transformer to the light fixture. For in-pavement lighting this loading can be quite large. In the case of edge lighting with an adjacent isolating transformer this loading is insignificant and can be ignored. For approach lighting with high towers, there may be a relatively high value of secondary resistance. Once the secondary (lamps and cable) load is determined, this is referred to the primary side of the isolating transformer including any losses as may be incurred due to the efficiency of the transformer itself. This efficiency varies with the lamp load as shown in Table 8-2.

Table 8-2. Isolating transformer efficiency

Transformer rating (watts)	*Lamp rating (watts)*	*Efficiency (per cent)*
30/45	30	70
30/45	45	77
200	200	90
250	250	89

d) *Primary cable load.* The resistive loading in the primary cables between light stations. Table 8-3 lists the resistance values for various AWG sizes of wire. This table can also be used for determination of the secondary wire and feeder cable loading.

Table 8-3. Copper wire resistance

Metric size IEC 60228	*AWG no.*	*mm^2*	*Ohms/km @ 20°C (*)*	*Ohms per 1 000 ft @ 25°C*
25		25.000	0.690	
	4	21.151	0.815	0.2533
16		16 000	1.078	
	6	13.302	1.296	0.4023
10		10.000	1.724	
	8	8.366	2.060	0.6401
6		6.000	2.873	
	10	5.261	3.277	1.018
4		4.000	4.310	

Metric size IEC 60228	*AWG no.*	*mm^2*	*Ohms/km @ 20°C (*)*	*Ohms per 1 000 ft @ 25°C*
	12	3.309	5.210	1.622
2.5		2.500	6.896	
	14	2.081	8.284	2.5756
1.5		1.500	11.493	
	16	1.309	13.170	4.084

(*) resistance @ 20°C based on resistivity ρ = 1.724*10-8 ohms-m^2/m

Note.— As a general practice, for 6.6 ampere circuitry for secondaries, the wire used is metric size 4 mm^2 or #12 AWG. For primaries, it may be the metric size 10 mm^2 or #8 AWG.

e) *Feeder load.* The resistive loading of the feeder cables connecting the first and last light of the system to the constant current regulator. The length of the feeder cable is twice the distance from the regulator vault to the lighting system, assuming the first and last light are essentially adjacent

8.3 CALCULATION OF LIGHTING FACILITY LOAD

The calculation of the load of a series circuit lighting facility may be done through means of graphs or mathematically. Various graphs are available, however, they may not give a description of the rationale for their development and therefore may not be useable for installations other than those for which the graphs were initially prepared. The preferred method is that of mathematical calculation.

8.4 SAMPLE CALCULATION

Table 8-4. Conditions

Nominal lamp power	P = 45 W
Lamp power tolerance (as per Table 8-1 45 W)	δ = +8 per cent (1.08 factor)
Current flowing through the series circuit	I = 6.6 A
Efficiency of the series transformer	η = 0.77 (typical value for a 30/45 W transformer)
Resistivity (copper)	$\rho = 1.724 \times 10^{-8}$ ohm-m @ 20°C
Power for control and monitoring module	P_M = 7 watts

Secondary lead length	L_S = 40 m
Secondary lead cross-section	A_S = 4 mm^2 = 4 x 10^{-6} m^2
Quantity of fixtures	N = 40
Primary cable length	L_P = 1 600 m (e.g. length of runway)
Feeder cable distance	L_F = 1 000 m (two feeds per loop circuit)
Primary cable cross-section area	A_{PC}= 6 mm^2
Feeder cable cross-section area	A_{FC}= 6 mm^2

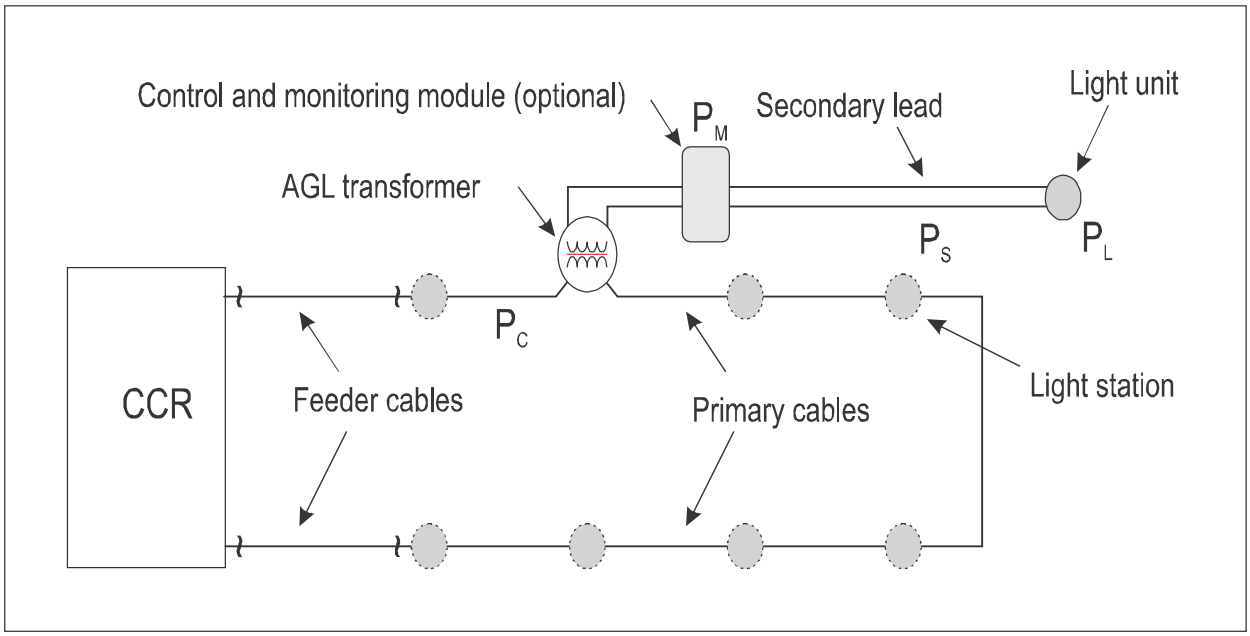

Figure 8-1. Circuit loading

8.4.1 Given the conditions of Table 8-4 and Figure 8-1 above, then follows a calculation of power requirement:

a) The electrical resistance of a wire would be expected to be greater for a longer wire, less for a wire of larger cross-sectional area, and would be expected to depend upon the material out of which the wire is made (resistivity). Thus the resistance can be expressed as

$$R = \rho * L/A$$

where:

R is the electrical resistance of the material (measured in ohms, Ω);
ρ is the static resistivity (measured in ohm metres, Ωm);
L is the length of the piece of material (measured in metres, m);
A is the cross-sectional area of the specimen (measured in square metres, m²).

b) Lamp load

P_L = lamp watts * lamp tolerance = 45*1.08 = 48.6 watts

c) Power loss on secondary (low voltage) lead using 4 mm^2 conductor:

conductor length = 2 * lead length = 80 m
$R_S = \rho * 10^6$ * length /area in m^2 = 1.724 x 10^{-8} * 80 m/4 x 10^{-6} = 0.3448 ohms
$P_S = R_S * I^2$ = 0.3448 ohms * (6.6 amperes)^2 = 15.2 watts

d) If the system uses a control and monitoring module, add 7 watts.

e) Total secondary power loss per light unit:

P_2 = lamp load + module + lead loss = 48.6 + 7 + 15.2 = 70.8 watts

f) Secondary loss referred to the primary side:

$P_1 = P_2$ / transformer efficiency = 70.8 / 0.77 = 91.9 watts

g) Power loss in the high-voltage primary and feeder cables:

conductor length = 2 * (feeder length + primary length) = 2 * (1 000 + 1 600) = 5 200 m
$R_P = \rho * 10^6$ * length /area in m^2 = 1.724 x 10^{-8} * 5200/6 x 10^{-6} = 14.9 ohms
$P_P = R_S * I^2$ = 14.9 ohms * (6.6 amperes)^2 = 649.0 watts

h) Total power requirement:

$P_T = P_P + 40 * P_{S2}$ = 649.0 + 40 * 91.9 = 4 325 watts = 4.3 kW

i) This may require the selection of a 5 kVA constant current regulator.

Constant current regulators according to IEC 61822 are available in sizes of: 1, 2.5, 5, 7.5, 10, 15, 20, 25 and 30 kVA.

8.5 OTHER CONSIDERATIONS

8.5.1 The calculation obtains a value in watts or kW which is the real power. The apparent power or kVA is dependent upon the anticipated power factor of the overall system operated at 6.6 amperes. For some lighting facilities, the power factor can be relatively low and should be included in consideration of regulator sizing.

8.5.2 The selection of constant current regulator may also be affected by the characteristics of the load. Ferroresonant CCRs are recommended for series circuits that have oscillating loads, where low output harmonic content is desired.

Addressable lights — wattage capacity of the switching device

8.5.3 In some cases, the switching capacity of the addressable switching device may depend on the CCR supplied waveform. High crest factor CCR current may not allow the use of the maximum rated load wattage. The designer should consider the application to ensure proper operation. The choice of CCR may impact the loading required. Consult with the manufacturer about potential CCR issues.

8.5.4 Each addressable device will consume power on the secondary cable of the isolation transformer. When calculating the load, consider the peak power consumption of the device and add the loss in the additional secondary cable, particularly if there is a secondary extension cable.

Synchronously flashing loads

8.5.5 The in-pavement runway guard light (RGL configuration B) circuit is an example of a potentially large load swing on a circuit in the range of 30 to 32 flash cycles per minute. If all of the in-pavement RGL fixtures on the circuit are exactly synchronized, half of the fixtures are on and off at any point in time. But as the lamps change state, the lamps that have just been turned off provide almost no load, and the lamps that have just been turned on provide about half their load, since the filaments are still warm. As the filaments warm to full output, the “on” lamps then provide their full load. Figure 8-2 illustrates the circuit loading.

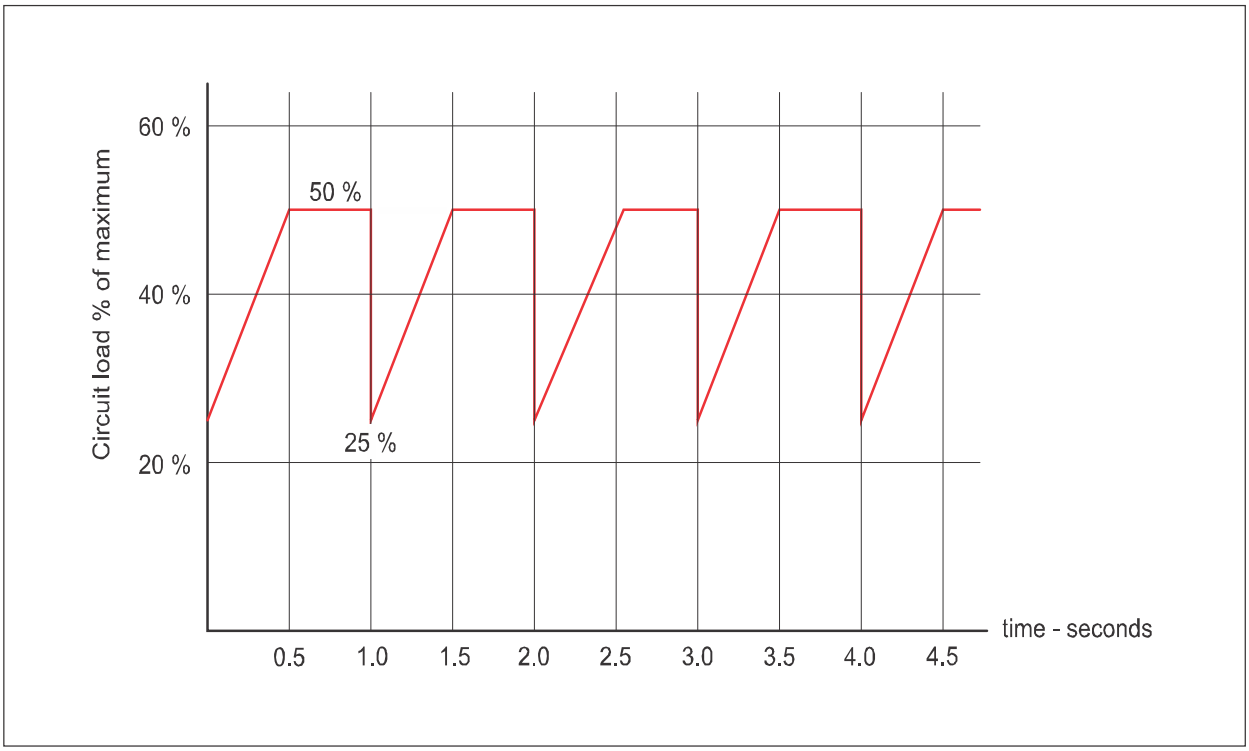

Figure 8-2. RGL load characteristic

8.5.6 In Figure 8-2, it is assumed that a 100 per cent load is with all in-pavement RGL fixtures energized. The selection of the CCR should include consideration for this type of loading. The designer must ensure that the calculations with regard to efficiency and loading are correct. The CCR manufacturer should also be consulted as to the suitability of a given CCR to this application. The available in-pavement RGL systems may include a built-in functionality to distribute the loading to somewhat reduce the dynamics for the circuit. In addition, the timing of the in-pavement RGLs may be critical to avoid the case where both even and odd lights are off at the same time, resulting in very low loading by the in-pavement RGLs. There may be a small amount of acceptable, normal CCR output current variation as the load is changing. For monitored series circuits, it is acceptable to slightly widen CCR output current monitoring alarm levels to eliminate unnecessary nuisance alarms. There may be a small amount of acceptable, normal CCR output current variation as the load is changing. For monitored series circuits, it is acceptable to slightly widen CCR output current monitoring alarm levels to eliminate unnecessary nuisance alarms. The designer should consult the manufacturer of the CCR and in-pavement RGL controls about the compatibility and application of these components.

Asynchronously flashing loads

8.5.7 An example of an asynchronously flashing load is the elevated runway guard light flashing in the range of 45 to 50 flash cycles per minute. Typically, the timing of each flashing device is unsynchronized and the series lighting circuit loading at any given moment may drift. The average loading tends to normalize over larger circuits over time, but there can be periods of time where loading is quite variable. There may be a small amount of acceptable, normal CCR output current variation as the load is changing. For monitored series circuits, it is acceptable to slightly widen CCR output current monitoring alarm levels to eliminate unnecessary nuisance alarms. The designer should consult the manufacturer of the CCR and elevated RGLs as to the compatibility and application of these components.

Non-linear or reactive loads

8.5.8 Electronic devices such as LED fixtures, series circuit signs and addressable components can provide a non-linear or reactive load on the circuit. These devices can include switching power supplies which may impart a capacitive characteristic to the circuit load. In addition, when the circuit is energized, these devices can initially appear to provide a relatively high-voltage drop and suddenly change to a lower voltage drop. The designer should consult with the CCR and electronic component manufacturer to determine if there are compatibility issues to consider.

Circuit stability and loading on circuits with signs

8.5.9 Some airside signs may contain a saturable transformer that ensures a continuous level of luminance through the range of constant current regulator brightness steps. These signs may have large swings in the load they present to the series circuit during start up or after a lamp fails. This type of load may not be well-tolerated by certain CCRs, resulting in instability or shutdown of the circuit. The designer should consult the manufacturer of both the sign and CCR to determine proper compatibility.

8.5.10 To determine the load requirements and CCR sizing for these signs, it would be incorrect to simply add the volt-amperes (VA) required by the signs, the load of the remaining items on the circuit, and then perform the normal calculations for cable losses, transformer efficiency, etc. This calculation would only be valid if the circuit was kept at the highest step of 6.6 amperes. Consider a circuit with multiple signs that has a sign load of 10 000 VA with other lights and losses of 3 000 VA, for a total of 13 000 VA. A 15 kVA CCR should be adequate for this load at the highest step, with a nominal maximum output voltage of 2 272 volts. However, if the CCR is set to a lower step, the sign components on the circuit will still require 10 000 VA to maintain their luminance. At 2.8 amperes, the 10 000 VA load requires about 3 570 volts and the CCR is then undersized. To provide the proper power to the sign, the maximum voltage needed by the signs at the lowest circuit step to be used must be considered along with the VA of the remaining circuit components, cable losses and series isolation transformer efficiency.

LED technology

8.5.11 The loading of circuits that incorporate LED technology and perhaps yet other forms of lighting will need to be addressed through consultation with the pertinent manufacturers. The principles, however, remain the same as for conventional incandescent lighting with respect to factors such as cable losses.

Chapter 9

AERODROME GROUND LIGHTING SERIES TRANSFORMERS

Note.— AGL transformers are addressed in IEC 61823.

9.1 FUNCTIONS

Series type lighting circuits use aerodrome ground lighting (AGL) transformers to provide continuity of the circuit so that failure of a lamp does not produce an open circuit fault. The AGL transformer also provides a degree of safety in that a low voltage is produced on the secondary or lamp side. This safety, however, may be compromised with a shorting failure between the primary and secondary windings. For some installations, by-pass devices, such as film cut-outs which short across the lamp when the lamp fails, are used to obviate the effect of secondary open circuits on the constant current regulator (see Figure 9-1).

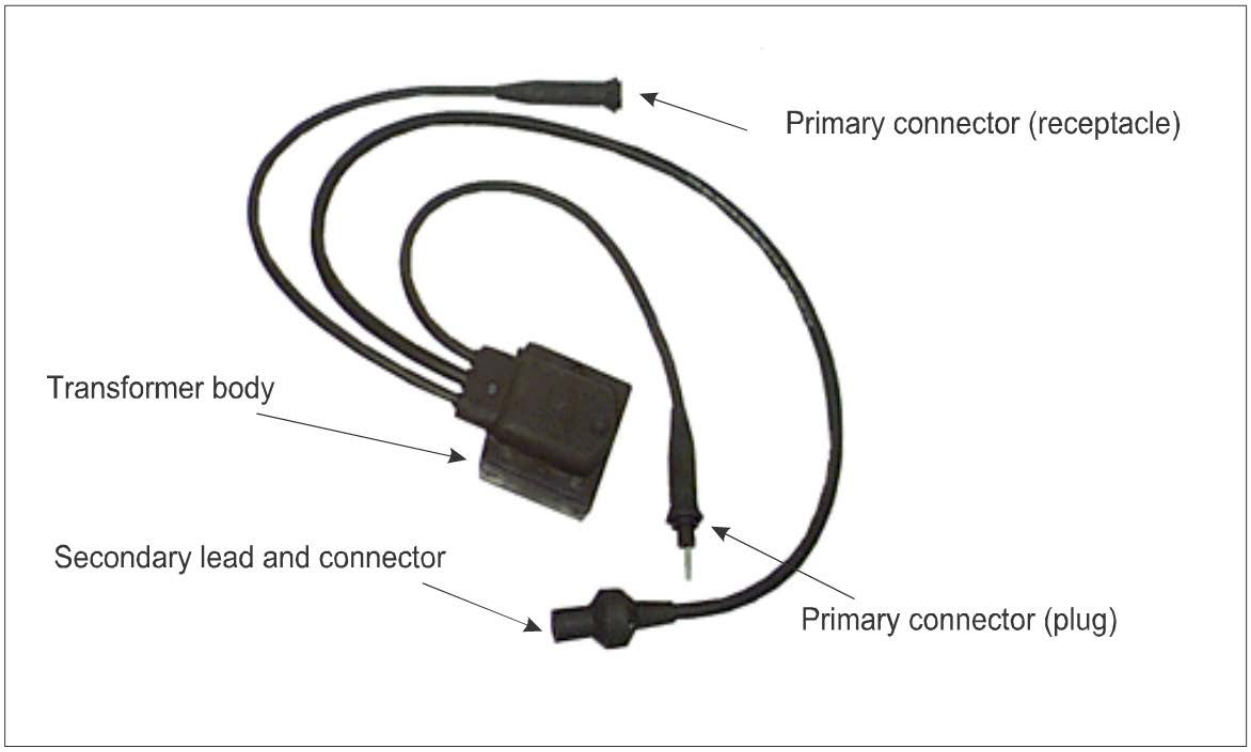

Figure 9-1. AGL transformer

9.2 TRANSFORMER DESIGN

9.2.1 An AGL transformer consists of a primary and a secondary coil wound on a magnetic core in a waterproof case with primary and secondary leads for connecting the series circuit to the lamp. The turns ratio of the primary coil to the secondary coil of a series transformer is 1:1 such that the lamp current is the same as that in the primary cable from the constant current regulator. While a turns ratio of 1:1 is most common, other turns ratio may be used (refer 9.5.1 b)). The primary and secondary coils are isolated electrically but linked by the magnetic circuit. The secondary circuit is subjected to a lesser electrical potential and some States have the practice of bringing out one side of the secondary to a grounding connection. The core of the transformer is magnetically unsaturated in operation, but becomes saturated if the lamps fail or the secondary circuit is open circuited, thus maintaining the integrity of the primary circuit. If the lamp circuit should be short circuited, the transformer would be in a no-load condition and have minimum effect on the series circuit. The transformers should be capable of continuous operation at rated load, open circuit, or short circuit without damage.

9.2.2 Where the lights are to be controlled individually through means of a field module, the design should be such as to permit communication through the transformers of the circuit.

9.3 ENCLOSURE

9.3.1 The waterproof case for enclosing the core, windings, and leads may be of metal, rubber, or plastic and should be suitable for installing by direct burial, underwater, in bases, or exposure to the weather. The case should protect the unit from damage if the transformer is dropped or is carried by a single lead. The case should prevent water from entering through the case or where joined to the leads, maintain resilience to avoid shattering or damage at very low temperatures, and protect the unit during handling, storage, installing and service. The case should be made of flame retardant/self-extinguishing material.

9.3.2 The primary leads should be not less than 10 mm^2 (#8 AWG) in size and should be insulated for not less than 5 000 volts. These leads should be not less than 50 cm long. Usually these leads will be provided with a plug type connector on one lead and a receptacle on the other suitable for connecting to the series-circuit cable. The secondary leads should be two-conductor with conductor size not less than 4 mm^2 or 6 mm^2 (#12 or #10 AWG) and insulated for not less than 600 volts and have a length of not less than 100 cm. Usually these leads are provided with a suitable two-conductor connector for connecting to the light.

9.3.3 Although the transformer is to be designed so as to be waterproof, it should be installed on cable trays in manholes or some form of separator such as a brick in a deep base (transformer housings).

9.4 AMBIENT TEMPERATURE

The transformers should be capable of operating in temperatures between –55ºC and +65ºC.

9.5 TRANSFORMER RATINGS

Ratings of AGL series transformers are by output power, primary and secondary current, the frequency and the insulation voltage of primary and secondary circuits. These transformers may be easily manufactured for almost any desired rating. Some commonly available ratings are as follows:

a) *Power.* Ratings of 30/45, 65, 100, 200, 300 and 500 watts are frequently used and sometimes 1 000 and 1 500 watts units are used. Ratings of 10/15 and 20/25 watts are available for LED application.

b) *Current.* Current ratings are usually given as a ratio of primary to secondary current. Common current ratings are 6.6/6.6, 20/20, 6.6/20 and 20/6.6 amperes.

c) *Frequency.* The common frequencies are 50 and 60 hertz. Preferably the transformer should be used on the frequency for which it was designed.

d) *Insulation.* Most isolating transformers are insulated for 5 000 volts on the primary circuit and 600 volts on the secondary. Larger power sizes of transformers may require a higher secondary insulation because of their higher open circuit voltage.

9.6 SEVERAL LAMPS FROM A SINGLE TRANSFORMER

Preferably each light is supplied by its own transformer. Sometimes to reduce the installation costs, such as for installing centreline lights on existing runways, or to reduce the mass and strength of cables, as for tall approach light supports, several lamps may be connected in a series across a single isolating transformer. The transformer must have the capacity to supply the total lamp load plus line losses. Two problems of this arrangement are: first, if one lamp fails causing an open circuit, the other lamps are inoperative unless suitable by-pass devices are used; and second, at the instant of the open circuit failure the instantaneous secondary voltage may become very great especially for the larger sizes of AGL transformers. These problems are examined below.

9.7 EFFECTS OF OPEN CIRCUITED SECONDARIES OF TRANSFORMERS

The design of most AGL transformers limits the root-mean-square (RMS) voltage of open-circuited secondaries to 200 volts or less. However, the instantaneous voltage of some transformers at the time the open circuit occurs may be significantly higher. Transformers with magnetic cores designed to saturate at a voltage only slightly greater than their operating voltage usually have lower RMS and instantaneous peak open circuit secondary voltages than do less saturated transformers. High RMS open circuit voltages require higher secondary insulation and present a greater electrical shock hazard, but they also make film cut-out operations more reliable. The reactance of series/series transformers with open circuit secondaries distorts the primary current waveform, and the resulting harmonic frequencies may affect the regulation of some types of constant current regulators.

9.8 LAMP BY-PASS DEVICES

Whether lamps are connected directly into the series circuit or as a group in series across a single AGL transformer, when the filament of one lamp burns out all the lamps of the group are out unless a suitable by-pass device is connected across the terminals of the failed lamp. From the early days of series lighting circuits without such transformers, fused film cut-outs have been used to by-pass failed lamps. For this device, spring-loaded contacts are connected across the terminals of each lamp. The spring-loaded contacts are separated by a film cut-out which is a small disk of a thin non-conducting film between conducting outer surfaces. When the lamp is operating, the film disk keeps the lamp terminals insulated from each other and the lamp filament completes the series circuit. If a lamp filament fails, the voltage across the lamp terminals rapidly rises so as to cause perforation of the film, shorting out of the lamp terminals and restoration of the series circuit before the constant current regulator's open circuit protection operates. When the lamp is replaced. a new fused film cut-out must be installed. The open circuit secondary voltage peak of some transformers may be 100 to

200 volts or less. Fused film cut-outs which operate at these voltages are available but may be unreliable as the open circuit voltage may fail to perforate the film cut-out and short out the failed lamp. A recent development of a by-pass device for lamps in these circuits is a shorting relay. These relays are more expensive than fused film cut-outs but provide more reliable operation.

9.9 TRANSFORMER STAND

9.9.1 Where AGL transformers are installed in transformer housings (light base), it has been common practice to place the transformer on a support such as a brick. The brick was provided for a variety of reasons: early designs of transformer did not survive well in water; the spacing was considered to reduce dielectric stresses between the steel base and transformer; the additional isolation provided a higher dielectric strength which might help prevent lightning damage. Although today's AGL transformers have much improved water withstand capability and the benefit of isolation from the bottom of the light base has not been verified, the practice has continued. Raising the transformer may have some advantage for maintenance access especially in winter. One should take care to ensure that the brick does not cover the drain hole in the bottom of the bases. Some airports have adopted use of a manufactured stand or use of a piece of plastic channel as shown in Figure 9-2.

9.9.2 Alternatively, the transformer may be hung from the wall of the housing, by means of a hanger as shown in Figure 9-3, especially where the housing is made of non-metallic material.

9.10 OTHER DEVICES

The AGL transformer was developed as a means of powering light units within a series-type circuit. Other devices of the same nature have evolved to meet further requirements, such as the power adaptor shown in Figure 9-4, which is designed to provide input to voltage-rated lamps such as wind direction indicator lamps and runway threshold indicator lights. Additions may be made to the transformer to allow addressing of the light units.

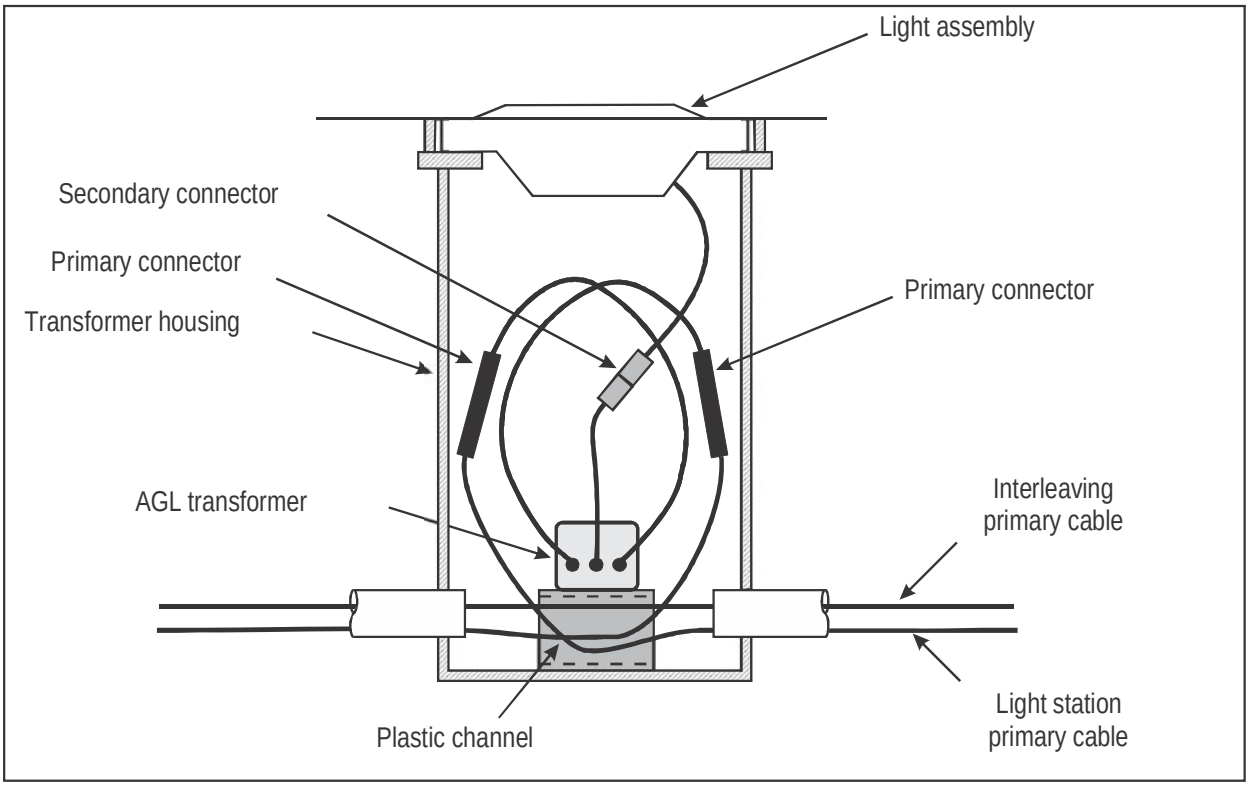

Figure 9-2. Use of plastic channel in housing

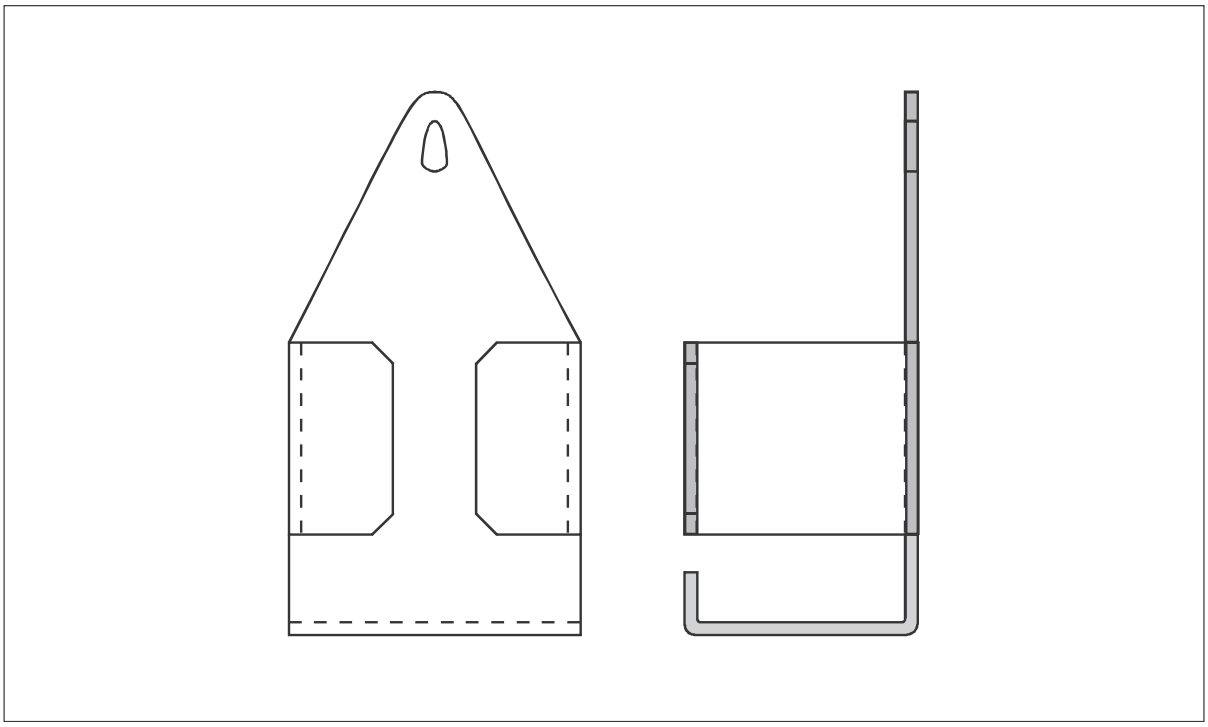

Figure 9-3. Transformer hanger

Figure 9-4. Power adaptor (source: ADB Airfield Solutions)

Chapter 10

CONTROL AND MONITORING OF AERODROME LIGHTING SYSTEMS

Note 1.— This chapter gives an overview of control and monitoring systems. Acknowledging that technology is moving quickly to provide yet further digital solutions, only basic examples can be given (see also Figure 10-1_.

Note 2.— With regard to control and monitoring, the reader may wish to refer to: IEC 62144 — Technical requirements for Aeronautical Ground Lighting (AGL) control and monitoring systems; *IEC 62143* — Guidelines for the development of a safety lifecycle methodology.

Figure 10-1. Control station in air traffic services tower (source: ATG airports)

10.1 APRON CONTROL PANEL

10.1.1 Although this chapter primarily examines the control and monitoring of lighting installed on the manoeuvring area (approach, runway and taxiway lighting), a second control system may be provided for lighting in the apron area, such as floodlighting, apron taxiway lighting, aircraft stand taxi-lane lighting, aircraft stand manoeuvring guidance lights and visual docking guidance systems. The graphics of this second control may be operated remotely to the operations/maintenance centre. It may be necessary to provide a degree of interface between this panel and the one installed in the ATS tower. Figure 10-2 shows an apron control panel as installed at Munich International Airport.

10.1.2 This control panel enables operation of lighting on the apron to facilitate the flow of aircraft from taxiways of the manoeuvring area to the gate positions. For complex aprons with numerous gate positions, provision should be made such that only the aircraft stand manoeuvring guidance lights for the gate intended to accept the aircraft are turned on. The visual docking guidance system is also turned on at this time. Similarly, the apron floodlighting may be controlled so as to be dimmed or turned off when the gate to which it applies is not in service.

10.2 CONTROL CIRCUITRY

10.2.1 The control circuitry for aerodrome lighting provides the means of switching on or off and of changing the intensity of the various lighting systems. These controls may be manual or automatic.

Local control

10.2.2 The simplest control method is a switch at the power supply unit which is operated by a person to energize or de-energize the circuit. This control method might be used at small aerodromes with a reduced number of lighting system circuits. At large airports, a means of local control in the electrical vault should be provided as an alternate control point during emergencies. This local control should replicate the control in the ATC tower.

Remote control

10.2.3 The control means provided for large aerodromes is considered "remote" in that it is remote from the power supplies in the electrical vault. Some aerodromes may have additional remote control stations at other locations, such as the operations data centre or maintenance centre, with means to enable activation of a particular station provided in the panel installed in the ATC tower. It is also possible to provide a remote control means at another aerodrome or flight service station.

10.3 TYPES OF REMOTE CONTROL SYSTEMS

10.3.1 Several types of control systems are used for aerodrome lighting. Traditional control/monitoring systems, both military and commercial, have been relay systems. Typically, as shown in Figure 10-3, cables required for these types of systems are multi-pair (fifty or more pairs) cables to connect the electrical vault to the air traffic control tower. Although designs of control systems have changed throughout time, the availability level continues to be an important parameter, therefore, communications have to be considered carefully.

Figure 10-1. Control station in air traffic services tower (source: ATG airports)

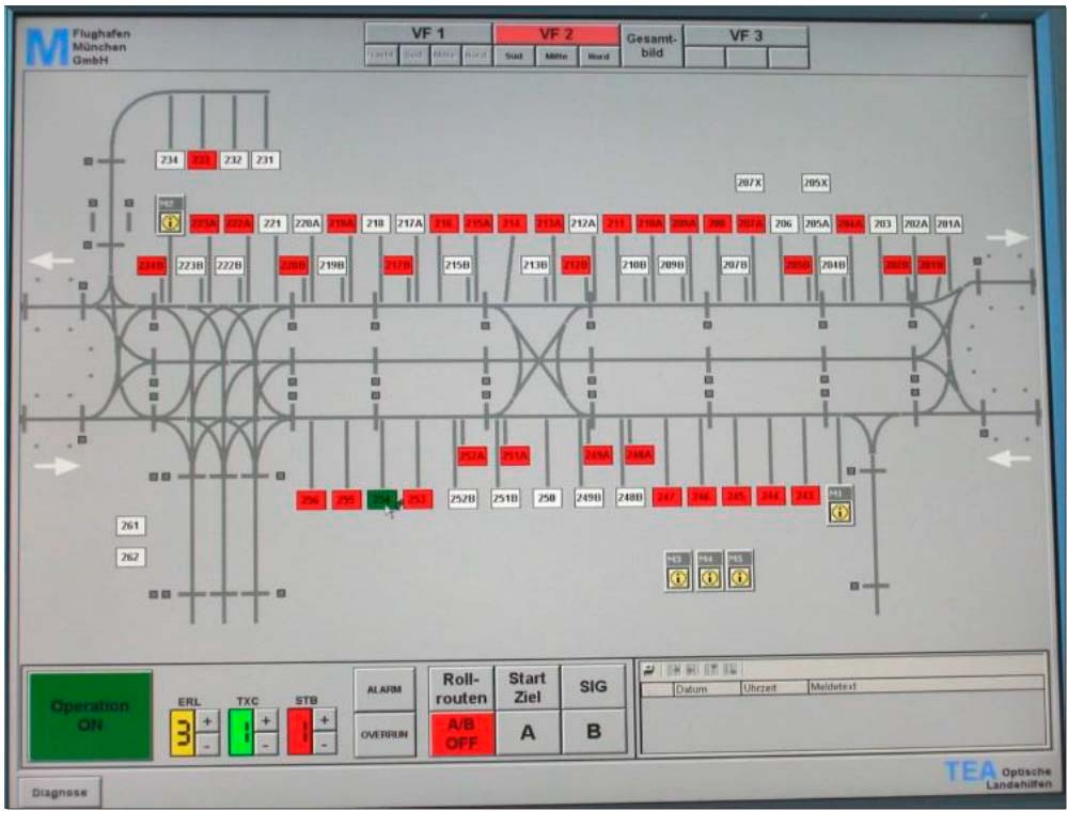

Figure 10-2. Apron control panel (source: Munich International Airport)

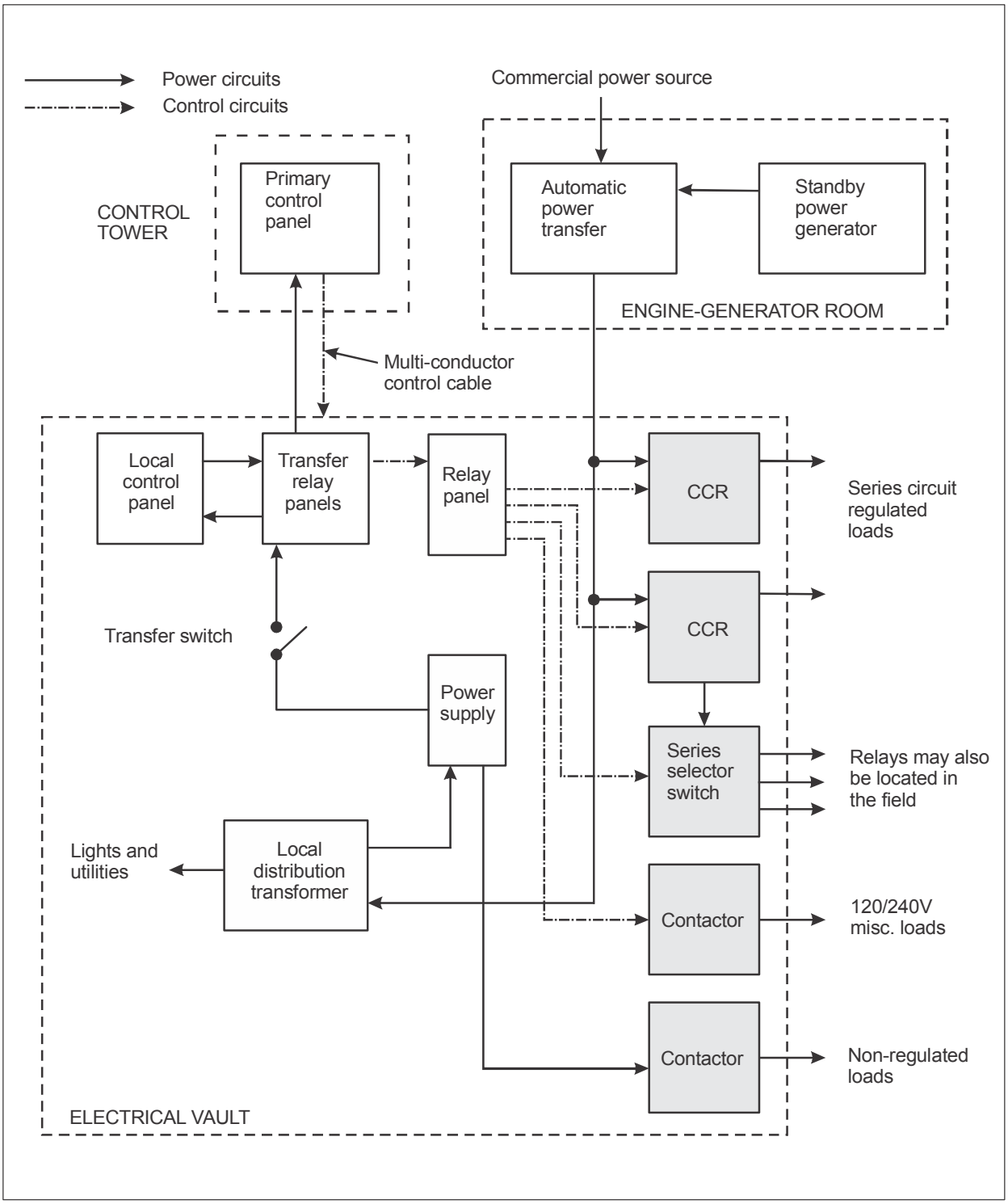

Figure 10-3. Traditional control/monitoring system

10.3.2 The distance between the control tower and electrical vault can be significant, resulting in a costly cable installation with the cable vulnerable to damage or failure of one or more pairs in the cable. In addition, these communications cables require separate duct systems to eliminate interference from the power cables. The traditional relay panel and multi-conductor control cable can be simplified by using a multiplexer, which requires only a one-pair cable to communicate between the vault and tower (or other station). A multiplexer can also be built into a programmable logic control system so that, if you lose one pair for some reason, you can transfer the control to another pair rather than replace the whole cable.

10.3.3 In the traditional control system, alternating current (AC) power is often used to energize the controls. This AC power may be at a low distribution voltage or at a special voltage more suitable for the length of the control cable runs and the size of the conductor. These controls may be connected directly to the power control device from the remote control panel or by auxiliary relays to operate the control devices. Alternately, some control systems use 24 or 48 volt DC for the control voltage, especially to reduce inductive coupling between circuits. Some aerodromes use radio signals for transmission of control functions, either air-to-ground for pilots or ground-to-ground for equipment located in areas not easily accessible to traditional landline control circuits. These control systems should be capable of a high degree of operational reliability and should be designed to provide, as far as possible, the integrity of the lighting patterns selected regardless of control cable faults or equipment failures. For modern installations, conventional copper pairs are being superseded by fibre optic control cables.

Computerized control system

10.3.4 In recent decades, there has been considerable advancement in the design of control systems. Early designs involving the use of toggle switches and rotary position switches have given way to the modern aerodrome lighting computer system (ALCS) consisting of human/machine interface (HMI) units, programmable logic controllers, remote terminal units, a supervisory (computer) system, and a communications infrastructure. As shown in Figure 10-4, most critical components are redundant with two network connections. Additional backup may be provided by means of radio ground-to-ground communication.

Mimic diagrams

10.3.5 Early forms of a control panel, consisting of toggle and rotary switches, required that the controller examine the physical positioning of the switch to verify what had or had not been turned on. Mimic diagrams, as illustrated in Figure 10-5, evolved for aerodromes having complex patterns of lighting. Illumination of components of the mimic enables a quick overview of the airfield status.

10.3.6 Such mimic diagrams, however, were specific to individual layouts and thus involved considerable cost, not only for first production but also for later modification as additional lighting facilities were installed at the aerodrome. With the use of graphics software, modern installations can have the mimic diagrams along with any control devices displayed on a touch-sensitive screen as shown in Figure 10-6. Touch-sensitive screens may be of infrared, surface acoustical wave (SAW), resistive or capacitive technology.

10.3.7 An important feature of control systems for reduced and low visibility operations is a selection capability provided to ATS for turning on the secondary power supply. Figure 10-7 illustrates a control module for turning on the diesel-electric generator upon declaration of Category II operations.

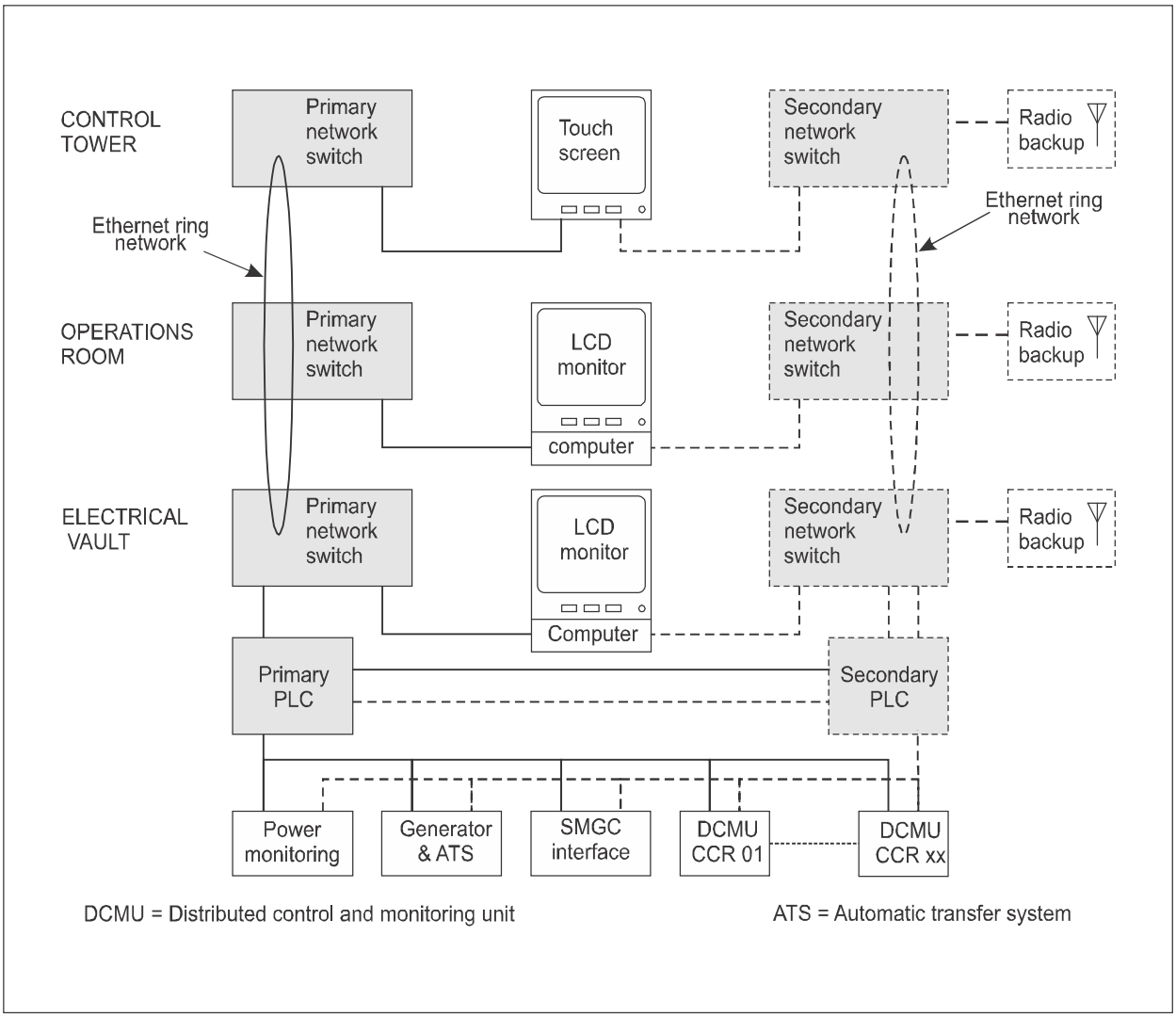

Figure 10-4. Aerodrome lighting computer system (ALCS)

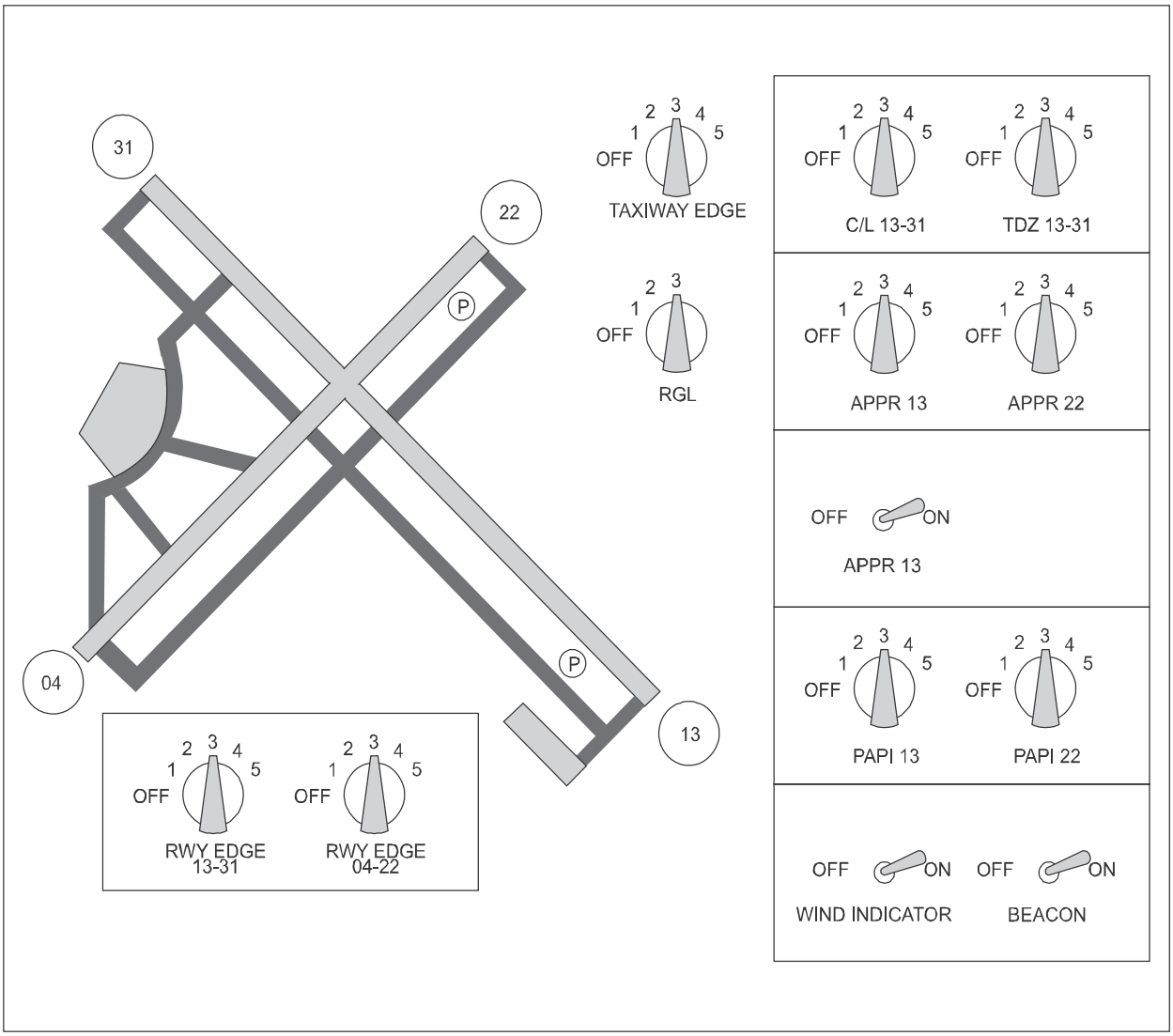

Figure 10-5. Mimic diagram with physical controls

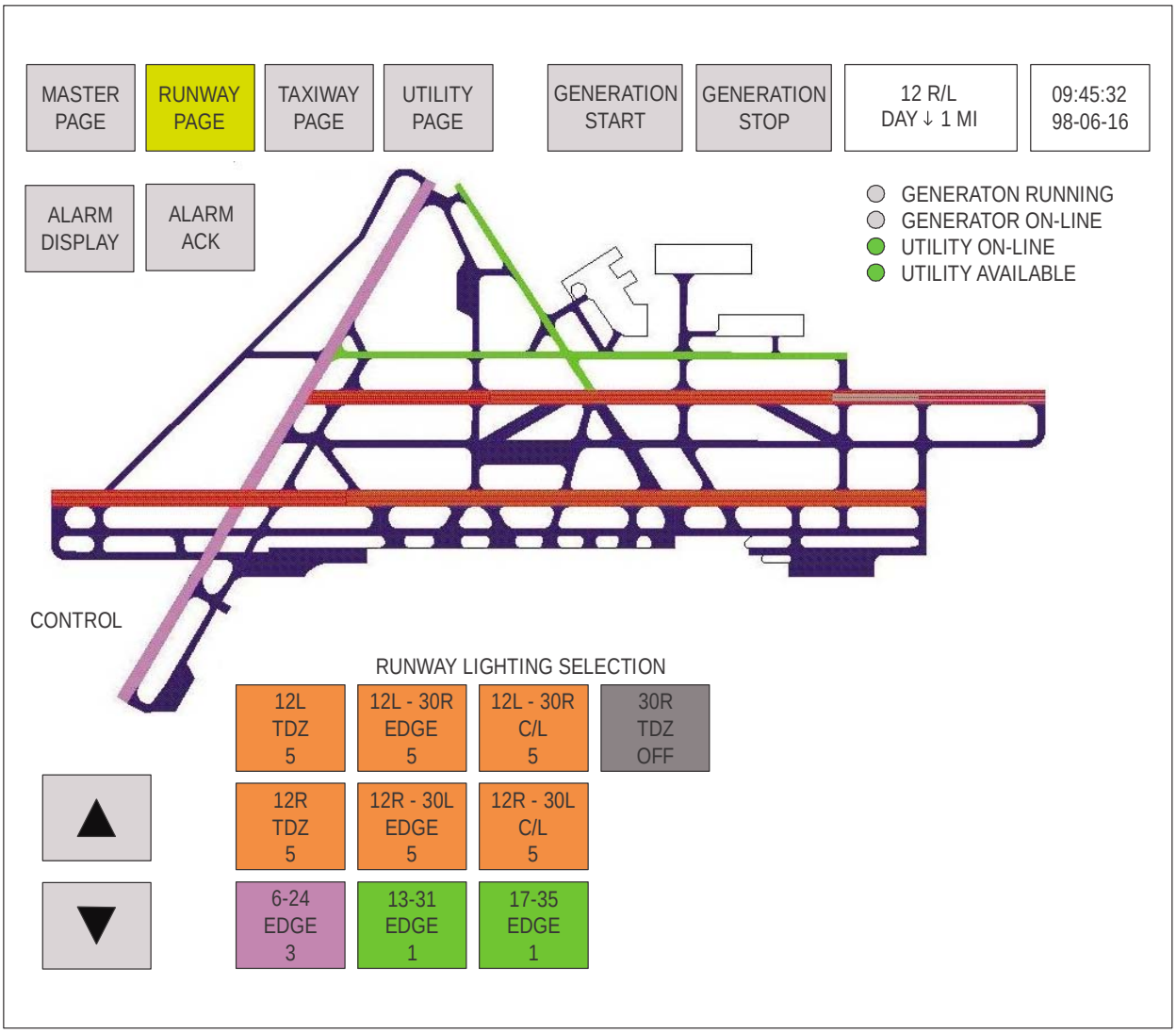

Figure 10-6. Mimic diagram and buttons on touch-sensitive screen (source: ADB Airfield Solutions)

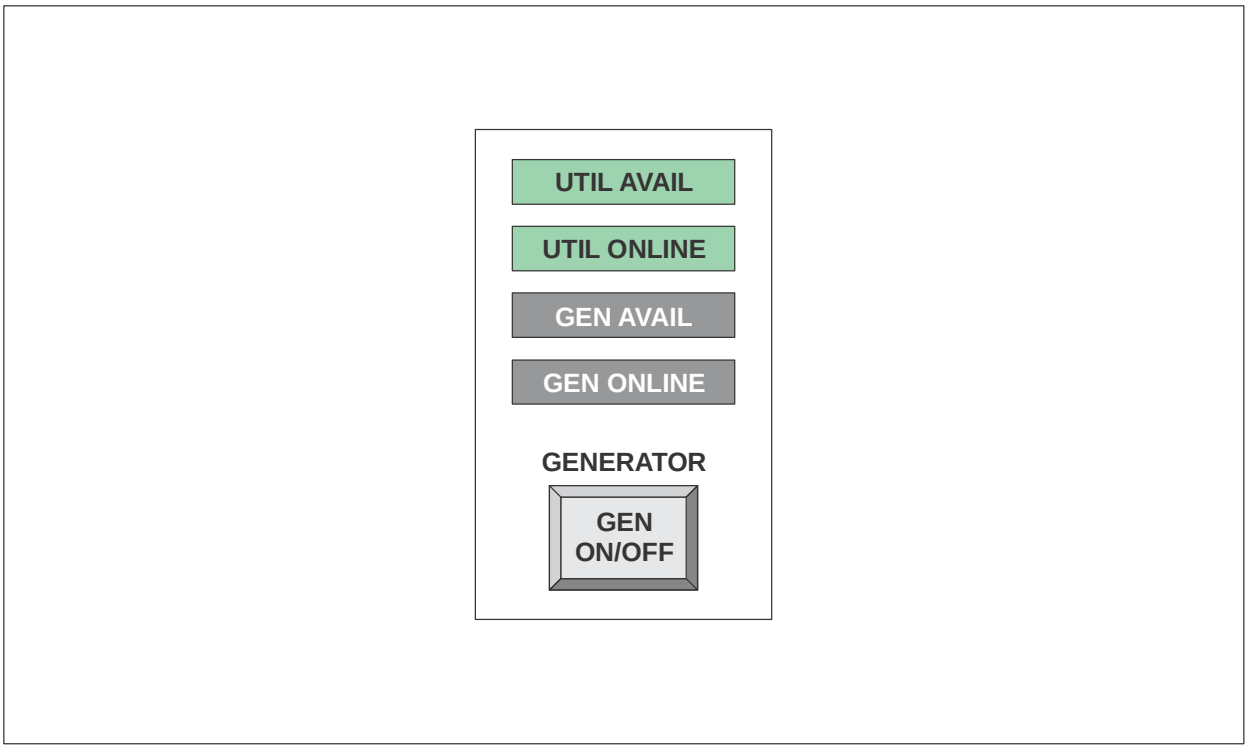

Figure 10-7. Utility/secondary power supply control

Data pages

10.3.8 Perhaps the most significant benefit of the ALCS is that it can provide data pages with information on facility status as well as maintenance activities undertaken. The historical record of this data enables refinement of preventive maintenance planning, installation improvements and budgetary forecast (see Figure 10-8).

10.4 TRANSFER RELAY PANEL

10.4.1 For safety of maintenance personnel and to avoid conflicting operation of the controls, only one control station should be able to operate at any one time. Transfer relay panels are used to switch the operating capability from the primary control panel to the alternate control panel. To accommodate all the control circuits involved in the transfer, several transfer control panels may be used but usually a single transfer switch actuates all of the control panels. The transfer control panels and the transfer switch are usually located at the site of the alternate control panel. For the ALCS, the switch transfer can be incorporated as a button onto the monitor screen. Activating the button should bring up a dialogue box requesting identification and password.

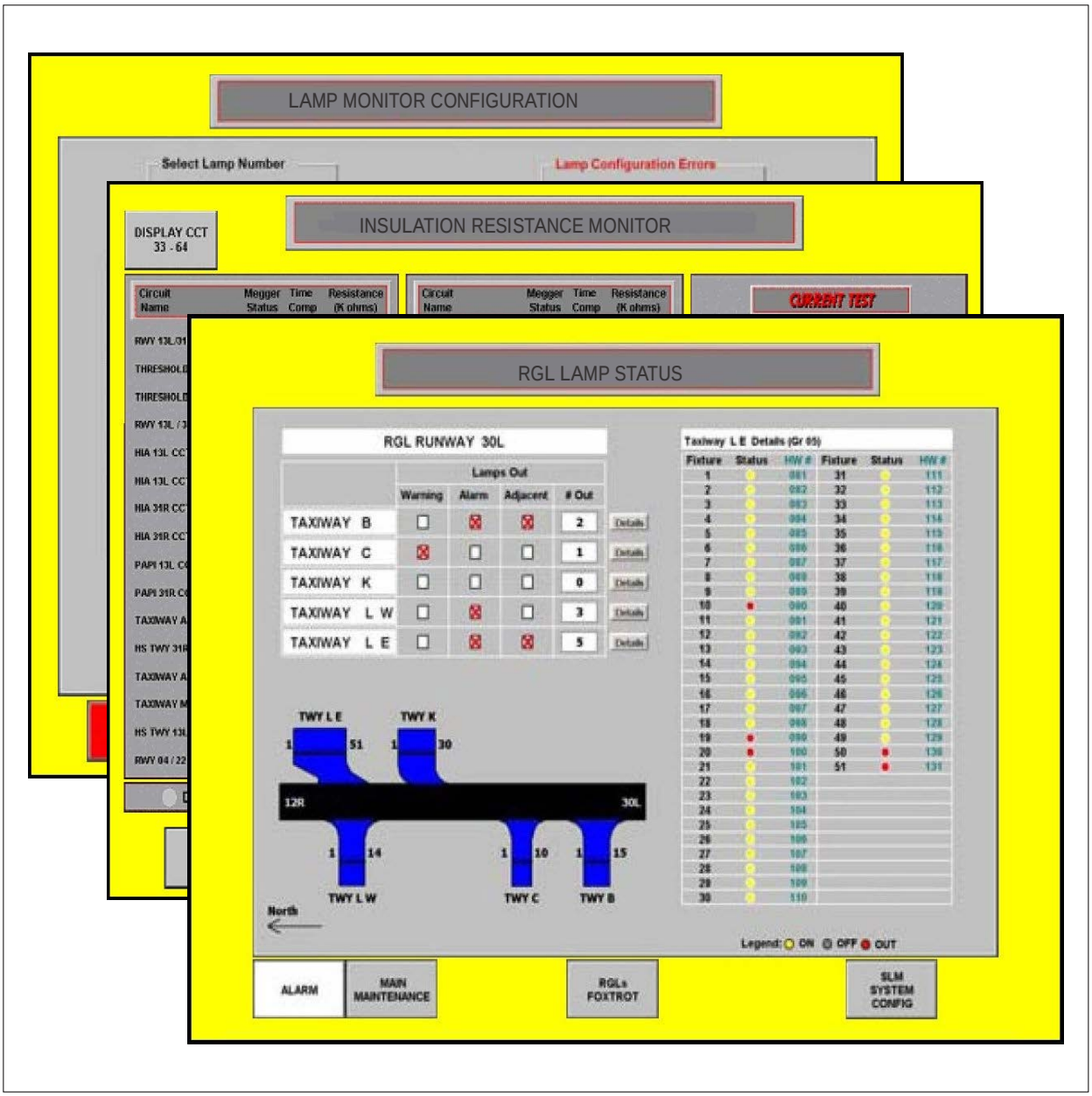

Figure 10-8. Data pages for operational performance and maintenance diagnosis (source: Liberty Airfield Lighting)

10.5 USE OF RELAYS

10.5.1 Relay panels for long control circuits. Where control circuits are long, the voltage drop in the lines may be such that power control devices cannot be operated directly from the primary remote control panel. Even circuits which earlier operated satisfactorily may become inoperative after additional control circuits are added. To permit control at a longer distance, relays with low-current coils may be used to energize the controls of the power equipment. These relays are often assembled in panels containing several relays (sixteen or more) called pilot relay panels. A relay may be provided for each control line from the primary remote control panel. The contacts of these relays control the power to the switches or controls of the power equipment functions.

10.5.2 In the case of the ALCS, communication between the control tower, operations room and electrical vault is normally by means of a fibre optic link which is not limited by distance, voltage drops or even electromagnetic interference.

Relays in the field

10.5.3 Some individual visual aids or small lighting loads (aerodrome beacons, wind direction indicators, sections of obstacle lights, simple approach lighting systems, etc.) may obtain power from a lighting vault or from a local source of power. If the power is from a local source, the relay for controlling these lights is usually located at or near the light or source of power. If the distance is long, the conductors of the control cable may need to be larger in size to reduce the voltage drop.

Circuit selector relays

10.5.4 For series systems, it is sometimes desirable to supply two or more lighting circuits from the output of a single constant current regulator. To this end, a cabinet of circuit selector relays as shown in Figure 10-9 is used. Typical applications are:

a) switching of PAPI, VASIS, and approach circuits from one approach end to the opposite end so as to reduce the number of regulators;

b) providing individual control of multiple small loads (e.g. taxiways) which enables standardization of regulator sizes while still providing individual circuit control; and

c) controlling of stop bars, lead-on lights and directional taxiway centrelines as part of a surface movement guidance and control system (SMGCS).

10.6 INTERCONNECTION OF CONTROLS

10.6.1 Often the operations at the aerodrome are such that certain combinations of lights are always used together or other combinations are prohibited. To enable the functionality of the latter, interlocks are provided. Examples are:

a) Runway edge lights, threshold lights, and runway end lights may be operated at the same time although the power may be provided from different circuits.

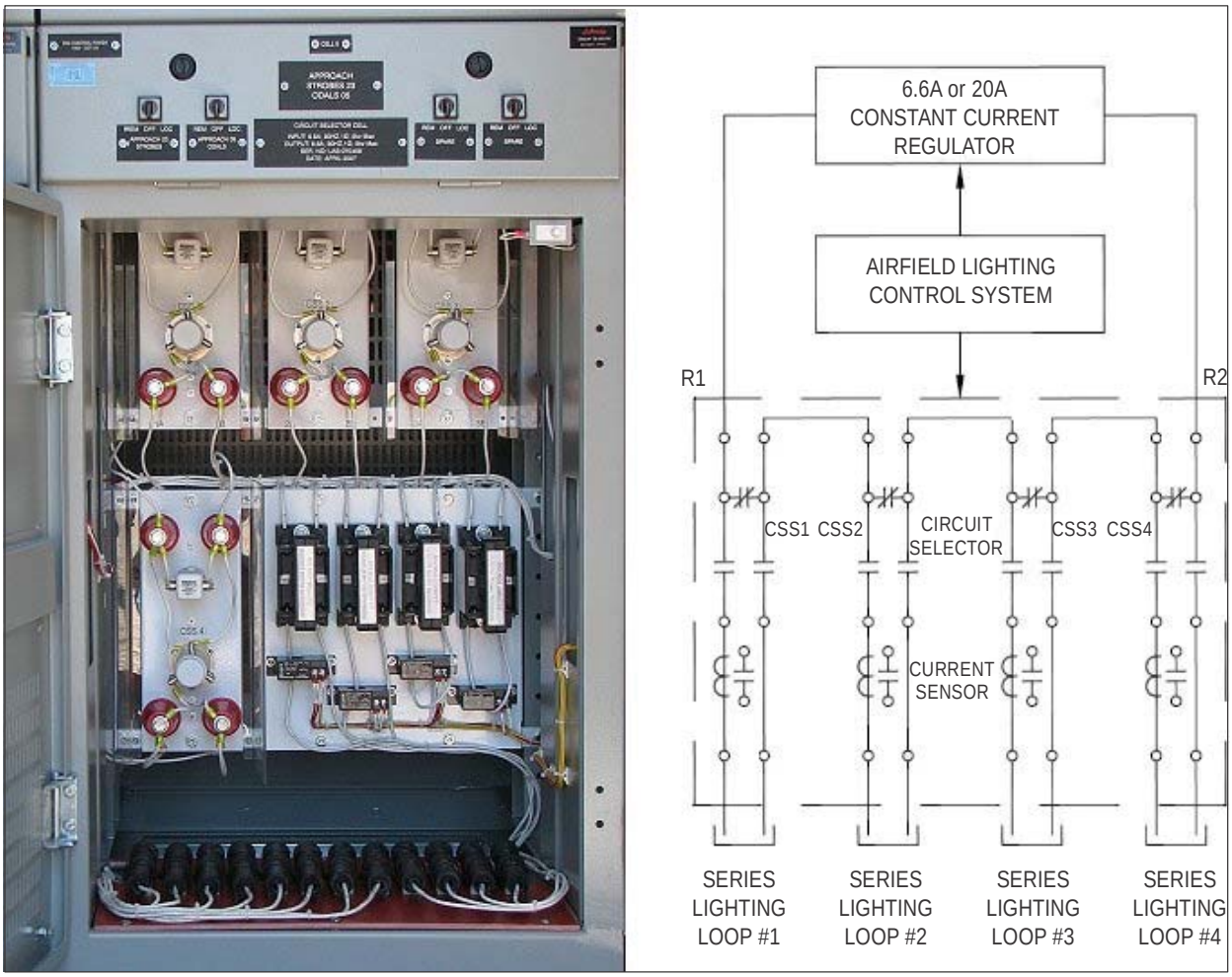

Figure 10-9. Selector relay cabinet (source: Liberty Airfield Lighting)

b) Runway edge lights may be operated without the runway centreline lights, but if the runway centreline lights are used the runway edge lights are always energized.

c) Sequenced-flashing lights of the approach lighting system can be used only when the incandescent lights of the approach system are on.

d) Setting of the intensity control for a given atmospheric condition may operate the approach lighting system at one intensity step, the runway lights at another intensity step, and the taxiway lights at yet another intensity step in order to maintain a balance between the lighting systems.

e) Rapid exit taxiway centreline lights may be given individual control and an intensity level which is that of the associated runway centreline lights.

f) The control system may be designed such that the controller can obtain a combination of lighting facilities for a specific mode of operation. For example, for landing on a particular runway, a single selection for say "Landing 31" will result in approach, runway and taxiway lighting being turned on in unison at intensity levels determined automatically in reference to visibility conditions. Similarly, runway lighting and low visibility taxiway routes may be selected from a single control device. The system design should enable ATC to override the automatic control.

g) Stop bars are normally installed along with an associated system of green "lead-on" lighting. The control is such that ATC can turn on all of the stop bars for a runway and then have individual control of those giving access to the runway ends or at locations for runway crossing. When the stop bar is turned off, the associated lead-on lights are illuminated to give a visual confirmation of voice instruction to proceed. The stop bar is turned back on through sensing (microwave sensors, pavement loops, etc.) of the passing of the aircraft or as a timed response. When the stop bar is turned back on, the associated lead-on lights are turned off.

10.7 AUTOMATIC CONTROLS

10.7.1 Some types of aerodrome lighting aids may be controlled satisfactorily by automatic controls. More often these automatic controls are used at smaller airports, but they may be used for less critical visual aids at large aerodromes, especially at locations not easily connected to the control circuits. The installation design should incorporate an override capability for the automatic control of certain lighting systems.

10.7.2 Photoelectric controls may be used to energize and de-energize aerodrome beacons, wind direction indicators, and obstacle lights in less critical areas. The controls are usually actuated by north-sky illuminance levels with switching taking place from 600 to 350 lux for day to night transition and from 350 to 600 lux for night to day transition. In the case of aerodromes in the southern hemisphere, light-sensitive switches should face towards the south.

10.7.3 Time switches may be used to automatically control the aerodrome lighting at aerodromes with non-instrument capability where the visual aids are turned off after a certain hour at night to conserve energy. The switch should be of the astronomic type which is self-adjusting for seasonal changes in sunrise and sunset. Thermal controls may be used to actuate heaters of some visual aids to prevent the formation or accumulation of ice, snow or condensation.

10.8 ADDRESSABLE LIGHTS

10.8.1 Light fixtures that are controlled individually are referred to as "addressable lights". Figure 10-10 shows a typical power line carrier arrangement for addressable switching devices. Each fixture is connected to an addressable control and monitoring unit (ACMU) on the secondary cable of the isolation transformer. There is an interface in the vault that sends control signals onto the series lighting circuit. The ACMUs in the field receive the signals generated onto the cable by the series circuit interface turning on the light and provide a monitoring response as to activation. Each ACMU is programmed with unique configuration parameters that pertain to the associated fixture.

10.8.2 Although the majority of installations use a power line carrier technology since no additional cable is required, addressable switching systems are also available using fibre optic or twisted pair copper wire as a means for data communication. The designer must be aware, however, that each type of data communications method has its own set of design requirements.

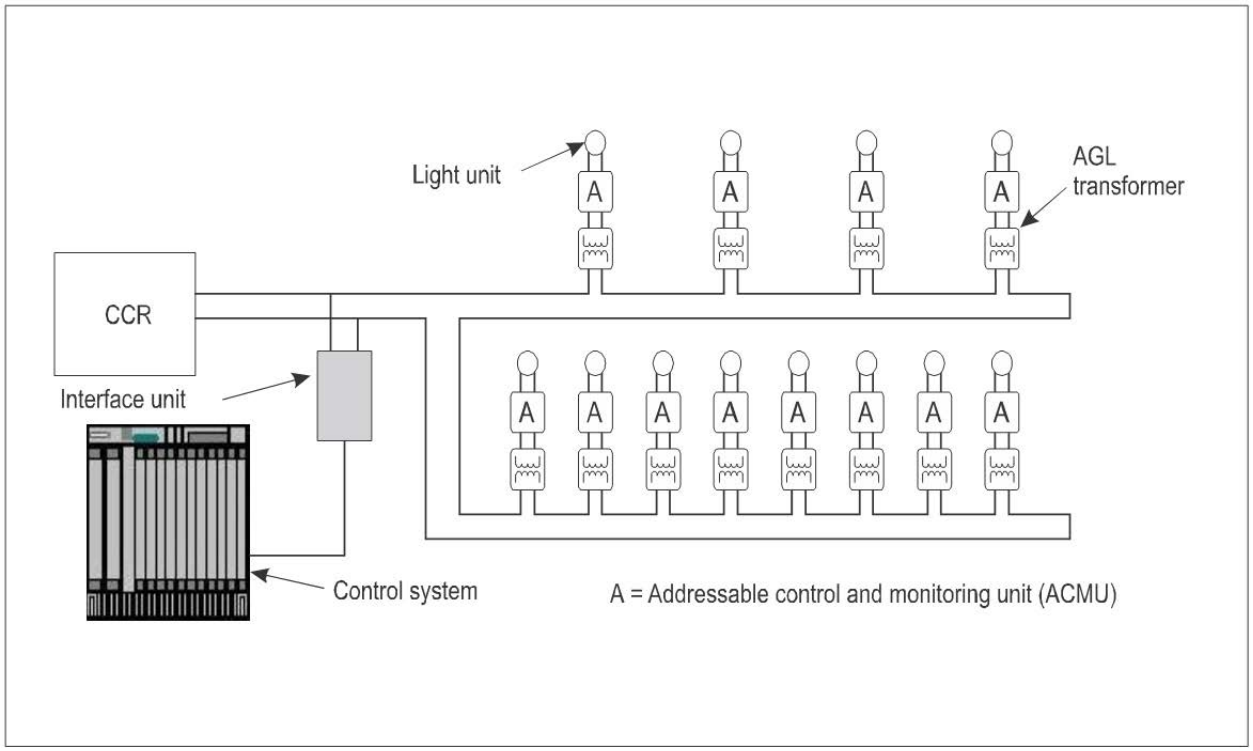

Figure 10-10. Addressable lights

10.9 RESPONSE TIME

The response time of the ALCS should be such that where a change of operational status occurs, an indication is provided within 2 seconds for stop bars and within 5 seconds for all other types of visual aids

10.10 MONITORING OF AERODROME LIGHTING CIRCUITS

10.10.1 Paragraph 8.3 of Annex 14, Volume I, states that a system of monitoring should be employed to indicate the operational status of the lighting system. Visual monitoring, except for what air traffic control may see and pilots report, is seldom used. Some designs of monitoring of lighting systems only indicate that the pertinent switch has been placed in the ON position. A desirable monitoring system is one which responds to the actual energizing of the lighting system in the field. Partial or incomplete monitoring systems can create a false sense of security.

10.10.2 Annex 14, Volume I, Chapter 10 defines an unserviceable light unit as that for which there is a loss of output such that the main beam average intensity is less than 50 per cent of the value specified in the appropriate figure in Appendix 2 of the Annex. For light units where the designed main beam average intensity is above the value shown in Appendix 2, the 50 per cent value is related to that design value. At least one State defines a light failure as a reduction below 70 per cent of the required intensity. In the case of regulator monitoring systems, it is not yet possible to indicate a failure which is an intensity reduction and therefore monitoring is with respect to total loss of output due to opening of a lamp filament. Similarly, a monitoring system using sensors at the regulator output cannot detect other modes of failure such as obscuring by grass, snow or rubber deposit. Therefore, the daily field inspection remains a necessity.

10.10.3 Light fixtures designed with an LED source(s) do not have the same failure mode as a light having an incandescent lamp. In brief, there is no filament that might open the circuit so as to cause a measureable change in circuit characteristics. The LED light design, therefore, should have an ability to provide an open circuit (fail-open) at the secondary cable of the AGL transformer, or draw zero current on a constant voltage circuit. This is particularly required if the fixture is to be retrofitted into an existing circuit with monitoring means.

10.10.4 The lighting systems are monitored for the following fault conditions:

a) loss of AC input power to the constant current regulator;

b) shutdown of the regulator due to operation of protective circuits;

c) a 10 per cent or greater drop in the volt-amperes (VA) delivered to the series circuit;

d) failure of the regulator to deliver the output current that corresponds to the brightness step selected; and

e) failure of a preset number of lamps in the series circuit.

10.10.5 Those fault conditions which pertain to total circuit failure — that is, loss of the lighting to the pilot — are alarmed to the ATC. Those faults that are related to maintenance criteria, such as failure of a preset number of lamps, are indicated to an operations centre or to the maintenance centre. Where a lighting system is composed of two or more circuits, the failure of one circuit may be alarmed to ATC; although the pattern reduction is sufficient for aircraft use on an emergency basis, it is a system failure for continued operation.

10.11 CLASSES OF MONITORS

Monitors may be classed as active or passive. Active monitors take a predetermined action when a specific condition is sensed or at a selected time after the condition occurs. Examples of monitors in this class are the primary source voltage sensors which automatically start the secondary engine-generator set and transfer the load when the primary power source fails, or the high-intensity time limit control which automatically resets to a lower intensity step and sounds a buzzer and/or energizes an indicator lamp after the lights have been at full intensity for more than 15 minutes[1]. Passive monitors provide a signal such as an indicator lamp illumination or buzzer when a predetermined condition occurs. A human operator must evaluate the meaning of the signal and take appropriate action. Examples of passive monitoring are the sequence flashing lights monitor which alerts when a preselected number of lights is inoperative or an indicator which shows failure of specific circuits.

10.12 MONITOR OVERRIDE CONTROLS

Often controls or procedures which can be used to override or circumvent the action of the monitor are provided. By activating a particular circuit or resetting a control, the operator can maintain system operation without change for a new or indefinite time period. A further signal indicating the monitor's response may be provided during the override operation to keep the operator informed that the system is in an undesirable operating status. An example is to reset the timer to full intensity operations at the beginning of each approach in low visibility conditions to ensure that the lights will not automatically be changed to a lower intensity during the approach.

1. Automatic resetting of the intensity is not desirable since the change could be made when a pilot is in a critical part of his approach.

10.13 INSULATION RESISTANCE MONITORING SYSTEM

Constant current regulators can be provided with an insulation resistance monitoring system which enables real time monitoring of the circuits as well as to generate statistical reports.

10.14 AIRCRAFT RADIO CONTROL OF AERODROME LIGHTING (ARCAL)

10.14.1 Radio signals from aircraft to control aerodrome lighting systems have been used, to a limited degree, at smaller aerodromes for several years. This control method has several advantages in that it permits the pilot to select the light intensity of his choice, eliminates the need for costly control cables, and conserves power by having the lighting system de-energized when not needed. Radio controls for air-to-ground, ground-to-ground and a combination of air-to-ground and ground-to-ground systems are available. Ground-to-ground control is used mostly when cable control circuits are not available and are not practical to install. Ground-to-ground control should be used only temporarily until the necessary cables can be installed.

10.14.2 For aircraft radio control of aerodrome lighting (ARCAL) or air-to-ground operation, only a receiver and decoder are installed on the airport. This form of control has been used to control runway edge lights, taxiway edge lights, simple approach lighting systems, visual approach slope indicator systems, as individual systems or in predetermined combinations at uncontrolled aerodromes or at other aerodromes during periods when air traffic control is not in operation. Obstacle lighting should not be radio controlled; however, they may be linked to a key facility which determines the operational use of the site. For example, obstacle lighting at a heliport may be turned on with the heliport lighting since they are only required when the heliport is in operation. Such linkage requires the approval of the local authority.

10.14.3 The actuating signal of the ARCAL is provided by a specified short series of clicks accomplished by keying the microphone of the aircraft communications transmitter as indicated in Table 10-1. At the end of a prescribed period, e.g. 15 minutes, the lights will be either turned off or returned to a preset brightness. The system may be recycled at any time for another 15-minute period at any intensity step desired by keying the microphone the appropriate number of times. Except for runway threshold identification lights (RTIL) with one or two steps, the lighting systems may not be turned off by radio control before the end of the 15-minute cycle.

10.14.4 The ARCAL is tuned to a single frequency in the range of 118-136 MHz, which is assigned by the local authority. Whenever possible, the common traffic advisory frequency (CTAF) is used for radio control of airport lighting. The CTAF may be UNICOM, MULTICOM, FSS, or tower frequency and is identified in appropriate aeronautical publications.

Interfacing the radio control with the lighting systems

10.14.5 The output of a single airport-owned radio controller is usually connected to the control inputs of several lighting systems. The radio controller may be directly connected to the lighting systems, or an interface box may be used to reduce the load on the radio controller's output relays or to allow additional switching capabilities. The following paragraphs examine the design considerations when interfacing a radio control with several lighting systems.

10.14.6 The radio control system is configured so that the runway lights are on whenever the other lighting systems serving the runway are on (except during day operations). When a runway has approach lights that are radio controlled and edge lights that are not, then the edge lights are left on at a brightness selected according to the anticipated weather conditions during the hours of night operation. If the runway lights are radio controlled and the approach lights are not, then the approach lights may be left off or at a preselected brightness. The approach lights must never be on while the runway lights are off.

10.14.7 On runways where the approach lights and the runway lights are both radio controlled, the intensities of both systems are increased or decreased simultaneously by the radio control.

10.14.8 While the ARCAL equipped with three control functions, airport lighting systems may have one, two, three, or five intensity steps. Table 10-1 gives an example on how to interface the radio control with the intensity steps of the airport lighting system. For example, a lighting system with five intensity steps would be connected so that three clicks of the microphone would energize brightness step 1 or 2, five clicks would energize step 3, and seven clicks would energize step 5. The airport authority may select either step 1 or 2 for the lowest brightness setting, depending on the background lighting at the airport.

10.14.9 On systems where the intensity is automatically controlled by a photocell or other means, the radio control will simply energize the system and the intensity will be selected automatically by the photocell.

10.14.10 RTIL systems may have one or more intensity steps and should be tailored to the pilot environment. Where the RTIL has more than one intensity step, the common practice is to have the RTIL turned off when the associated runway lighting is selected for lower intensities (three clicks) and energized for selection at the higher intensities (five and seven clicks). For a three-step RTIL, the selection is for low, medium and high corresponding to three, five and seven clicks respectively.

10.14.11 When air-to-ground radio control is used at night, the lighting system may not be energized for long periods of time. During these “idle” periods, the airport beacon, obstruction lights, and any other lighting systems that are not radio controlled will continue to operate while the radio-controlled systems are off. As an option, the runway edge lights may be left on a low intensity step, depending on local conditions. If the runway lights are left on during idle periods, other lighting systems may also be left on at a pre-selected intensity.

10.14.12 Since the runway and taxiway edge lights, approach lights and lighting for taxiway signs are not normally needed during the day – except during restricted visibility conditions – the radio control system may be configured with a day mode that energizes only those lighting systems which are useful during the day. Using this control mode, however, means that daytime instrument flight rule (IFR) procedures associated with the deactivated lighting systems may not be used. The day mode may be selected automatically by means of a photocell or manually by use of a switch. In areas with heavy voice traffic on the frequency used by the radio controller, there may be nuisance activation due to three random microphone clicks in a 5-second period. If this is a problem, the three-click setting on the radio control may be by-passed for daytime use.

10.14.13 Other control devices, such as interlocks, photocells, and switches, may be used to provide flexibility of the radio control system under differing operational conditions. For runways with lighting systems on both ends of a runway or at airports with more than one runway, it may be desirable to incorporate a manual switching system to allow the airport operator to choose which lighting systems will be energized by the radio control. This will permit the pilot to activate only those lighting systems that serve the active approach runway and taxiways.

Table 10-1. Example of how to interface of radio control with airport visual aids

Lighting system	*Number of intensity steps*	*Intensity step selected per number of microphone clicks*		
		3 clicks	*5 clicks*	*7 clicks*
Approach lights	2	Low	Low	High
	3	Low	Medium	High
	5	1 or 2	3	4*
Edge lights				
Low intensity	1	On	On	On
Medium intensity	3	Low	Medium	High
High intensity	5	1 or 2	3	4*
Taxiway edge lights	1	On	On	On
	2	Low	Low	High
	3	Low	Medium	High
Runway centreline	5	1 or 2	3	4*
Touchdown zone lights	5	1 or 2	3	4*
Taxiway centreline lights	3	Low	Medium	High
	5	1 or 2	3	4*
Runway threshold indicator lights	1	Off	Off	On
	2	Off	Low	High
	3	Low	Medium	High
PAPI	3	On	On	On
	5	1 or 2	3	4*
Wind direction indicator	1	On	On	On

** A photocell may be installed in the system to allow the 5-click setting during daytime operations.*

Chapter 11

INCANDESCENT AND GASEOUS DISCHARGE LAMPS

Note.— This chapter examines conventional lamps used for aviation ground lighting. New technology in the form of light emitting diode (LED) lamps is examined in Chapter 12, 12.2.

11.1 INCANDESCENT LAMPS

11.1.1 Incandescent lamps are used in most fittings installed in aerodrome lighting systems. The following characteristics of incandescent lamps are pertinent to the design of the aerodrome lighting circuits.

11.1.2 The light output, life, power consumed, and efficacy (efficiency) of incandescent lamps is a complex function of the applied voltage or current, as indicated in Table 11-1 and Figure 11-1 and Figure 11-2. For example, if the voltage applied to a lamp is 5 per cent greater than rated voltage, the light output (lumens) will be about 120 per cent of rated light output, and the lamp life will be about one-half the design life. The effects of changes in lamp current are greater. If the current through a lamp is 5 per cent above rated current, the light output will be about 135 per cent of the rated light output and the lamp life will be about three-tenths the design life. These values illustrate the need for close control of the applied voltage or current.

Table 11-1. Incandescent lamps equations

$$\frac{lumens}{LUMENS} = \left(\frac{volts}{VOLTS}\right)^{3.38} = \left(\frac{amperes}{AMPERES}\right)^{6.25}$$

$$\frac{life}{LIFE} = \left(\frac{volts}{VOLTS}\right)^{13.1} = \left(\frac{amperes}{AMPERES}\right)^{24.1}$$

$$\frac{watts}{WATTS} = \left(\frac{volts}{VOLTS}\right)^{1.54} = \left(\frac{amperes}{AMPERES}\right)^{2.85}$$

$$\frac{amperes}{AMPERES} = \left(\frac{volts}{VOLTS}\right)^{0.54}$$

Note.— The exponents in the above equations will vary for different lamp types, for different lamp wattages and for various ranges of per cent voltage variation. The values given above are roughly applicable to vacuum lamps of about 10 lumens per watt and gas-filled lamps of about 16 lumens per watt in a voltage range of 90 to 110 per cent of rated volts. For characteristics outside this range, refer to Figure 11-1 and Figure 11-2. What is of importance here is to realize that operating aviation lamps in excess of their rating substantially reduces life.

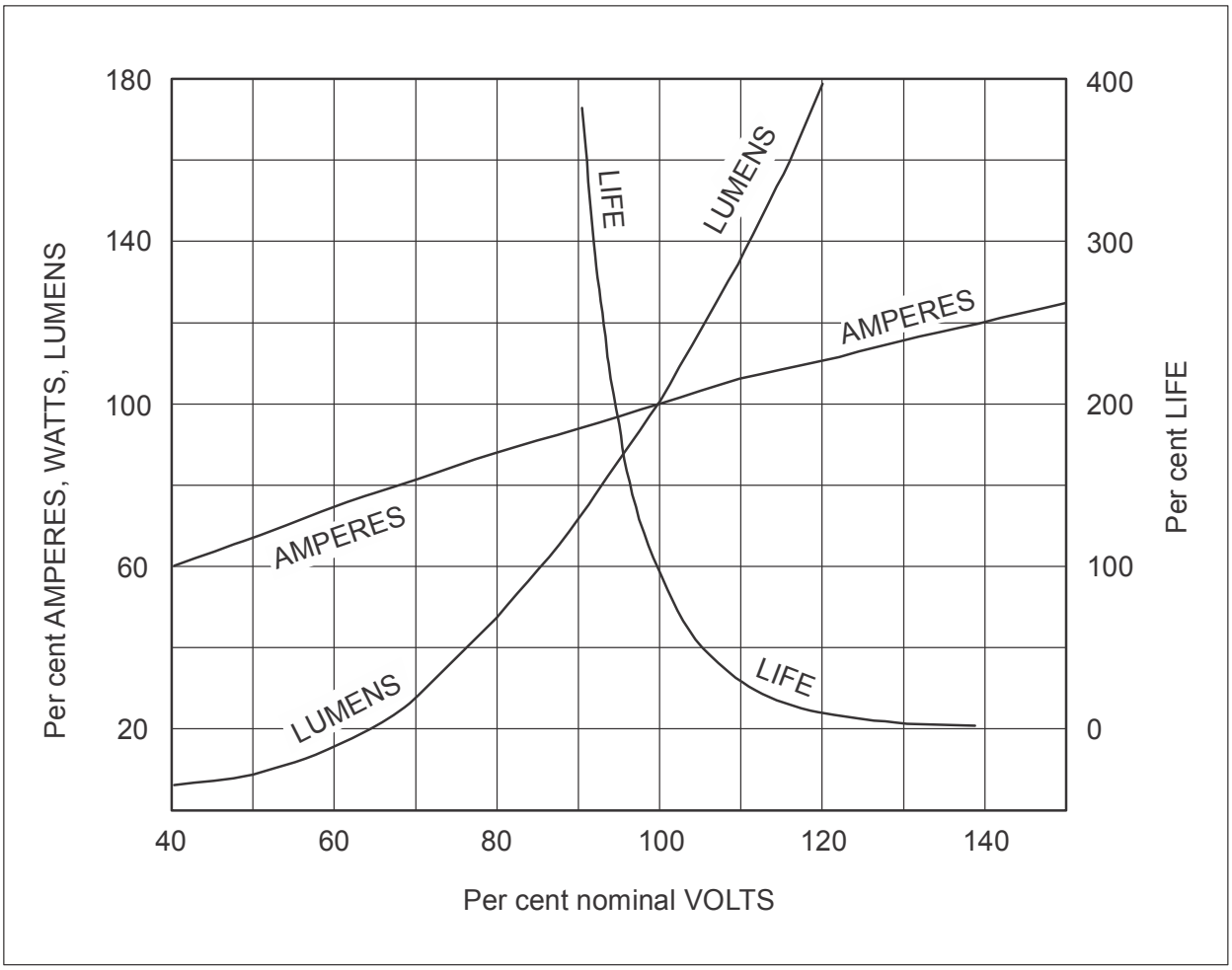

Figure 11-1. Effect of voltage variation on the operating characteristics of incandescent filament lamps in general lighting (multiple) circuits (adapted from IES Lighting Handbook 1984)

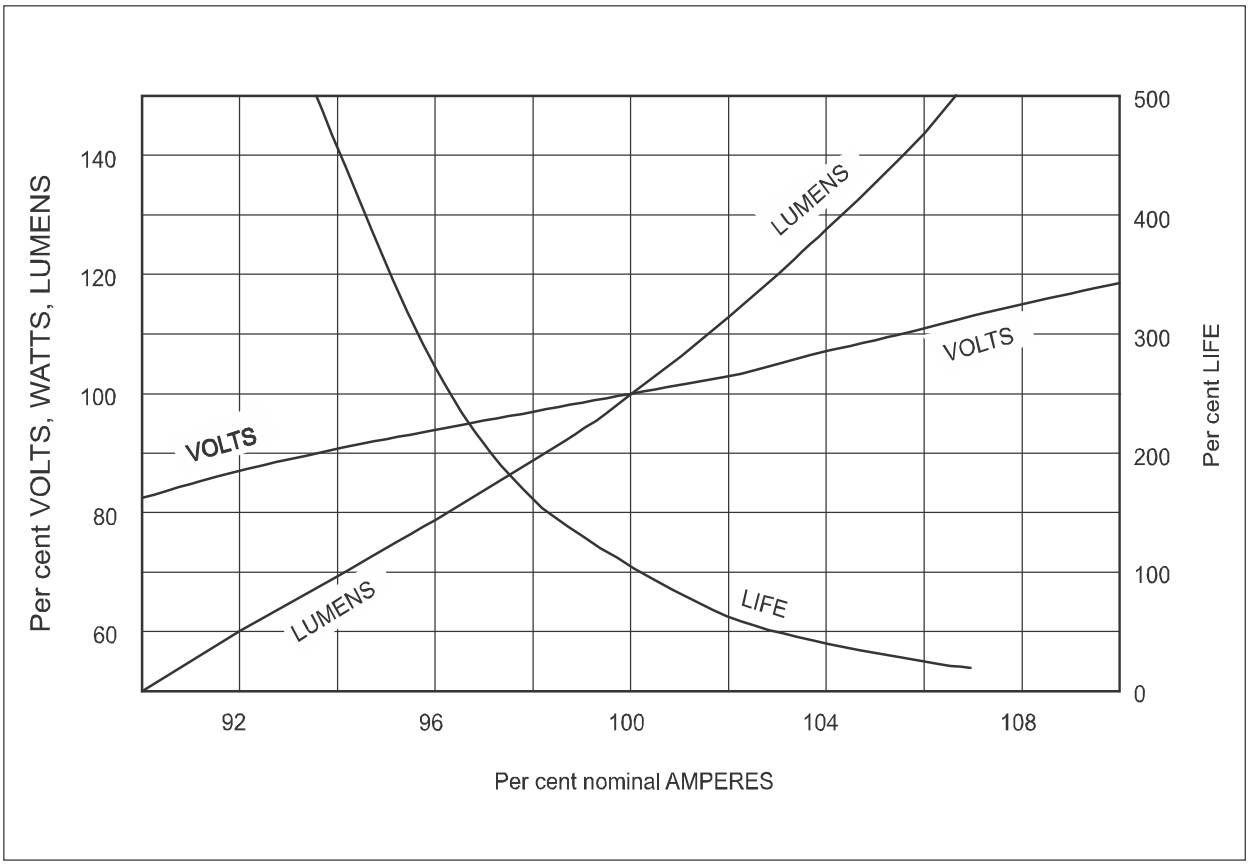

Figure 11-2. Effect of voltage variation on the operating characteristics of incandescent filament lamps in series lighting circuits (adapted from IES Lighting Handbook 1984)

11.1.3 The designer of an aerodrome lighting system may have some latitude regarding the choice of lamps for certain aerodrome light fixtures, selecting a series lamp, a low-voltage multiple lamp, or a higher-voltage multiple lamp. The following factors are pertinent in the choice:

a) the voltage drop across series lamps usually falls in the "low-voltage" category; the voltage drop across a 6.6 amperes, 200 watt runway edge light is 30 volts, and the voltage drop across a 20 amperes, 500 watt approach light lamp is 25 volts;

b) because of their differences in design tolerances, series lamps should not be used in parallel circuits and multiple lamps should not be used in series circuits; and

c) the life of a "low-voltage" lamp will be greater than that of a "high-voltage" lamp, for a given rated power consumption and light output.

Tungsten-halogen lamps

11.1.4 Many lamps now being used for aerodrome lighting are tungsten-halogen lamps. The filaments of these lamps are enclosed in small quartz tubes which contain small amounts of a halogen, such as iodine, in addition to the usual inert fill gas. When the filament is heated, tungsten evaporates from the filament and condenses on the inside walls of the lamp envelope. The vaporized halogen combines with this condensed tungsten forming a vapour. This vapour travels to the hot filament where it disassociates and redeposits the tungsten on the filament. This process reduces blackening of the lamp bulb, increases the life of the lamp, maintains better light intensity, and improves the efficiency of the lamp. The cost of the lamps is however increased. The halogen cycle works most effectively at the rated current of the lamp. For this reason, systems such as that of approach lighting should be operated at the highest brightness step for a suitable duration to limit blackening of the lamp envelope.

Infrared coated (IRC) lamps

11.1.5 Halogen lamps produce more than just visible light; 60 per cent of the radiated energy is unused infrared radiation. Some manufacturers may have available IRC lamps for their fixtures. This is a halogen lamp with a special coating on the filament tube or reflector which redirects infrared (IR) energy (heat) back to the filament so that the filament will operate at a higher temperature producing more lumens per watt, greater luminous efficacy, lower power consumption and longer life. In terms of lifespan, IRC lamps will last twice as long as standard halogen lamps under the same conditions.

11.1.6 Figure 11-3 shows an MR16 lamp with a multifaceted reflector (MR). The designation "16" is the outside diameter of the reflector in eighths of an inch. In as much as the photometrics of the light unit are dependent upon the lamp, airport operators should not change the type of lamp without acceptance by the light unit manufacturer.

11.1.7 The PK30 lamp (Prefocus, Kabel (wire), diameter of base in millimetres) as shown in Figure 11-4 is used in such light housing assemblies as PAPI and edge lighting. The small size of the lamp and filament allows better optical control. As for other aviation lamps, caution in handling is necessary due to the high level of heat produced.

11.2 GASEOUS DISCHARGE LAMPS

Sequence-flashing approach lights ("strobes")

11.2.1 The lamps used in the sequence-flashing approach lights are gaseous, capacitor-discharge lights and not incandescent lamps. The lamp is a tube which may be formed into various shapes containing an inert gas, such as argon or krypton, which emits light when an arc is created in the gas. The power supply charges electrical capacitors which are the source of energy for the arc and also provides the triggering voltage to initiate the arc. Very high voltages are present in the power supply and lamp and this hazard should be considered in the design of the lighting system. The peak intensity of the lights may be very great but of short duration. The frequency of the flash is limited by the time required to recharge the capacitors and is typically a few times per second.

Obstacle lights

11.2.2 In the case of obstacle lighting, a very short duration flash is not suitable for navigation guidance during night-time. If the flash is too quick, it becomes difficult for the pilot to locate the light against the dark surround of night-time environment. For this reason, the lights are designed so as to produce a quick sequence of pulses which are sufficiently close to each other so as to be seen by the pilot as a single long duration flash. The determination of effective intensity of such multiple pulse flashes is described in the *Aerodrome Design Manual* (Doc 9157), Part 4.

Figure 11-3. MR16 lamp with reflector (source: Genesis Lamp Corporation)

Figure 11-4. PK30 lamp (source: OSRAM GmbH)

Other gaseous discharge lamps

11.2.3 The higher efficiency of gaseous discharge lamps encourages their use. Types of these lamps include fluorescent, mercury-vapour, metal-halide, and low or high-pressure sodium-vapour lights. The use of lights of these types is usually limited to illumination of areas such as apron areas except for the use of fluorescent lamps in some taxiway edge lights and for illuminating signs. When considering using lights of this type, the following are factors that should be investigated:

a) *Restarting.* Some of these lamps cannot be restarted for several seconds to minutes after the arc is extinguished. Power interruptions or switching can cause loss of lights at critical times. Emergency lighting by other types of lamps may be desirable.

b) *Cold starting.* Some of these lamps cannot be started or are difficult to start in low ambient temperatures.

c) *Intensity control.* These lamps often are not capable of intensity control or have a limited range of control as compared to incandescent lamps.

d) *Stroboscopic effects.* The stroboscopic effects of the lamps may be disturbing. Where such lights are used, including for illumination of areas, the use of three-phase electrical supply systems with a balance in connecting the lights may be desirable.

e) *Colour shifting.* Typically the light emitted from these lamps covers a limited part of the visual spectrum. This makes recognition of colour coding difficult as colours may not have their ordinary appearance when illuminated by gaseous-discharge lamps. The colour "red" is particularly affected.

Chapter 12

SOLID STATE TECHNOLOGY

12.1 INTRODUCTION

Aeronautical ground lighting (AGL) originally developed from the available technology. That is, roadway lighting utilizing series-type circuitry, incandescent (filament type) lamped fixtures, isolating (AGL) transformers and constant current regulators. The advent of solid state technology is progressively revolutionizing AGL and at the same time bringing forth new issues. The purpose of this chapter is to provide a brief overview regarding design and maintenance.

12.2 LIGHT EMITTING DIODES (LED) LIGHT UNITS

Of the various forms of solid state technology, that having light emitting diodes (LEDs) is most common for airports application. Initially LEDs were used for lights requiring relatively low levels of intensity such as obstacle lighting (32 cd) and taxiway edge lighting (2 cd). Over the past recent years, the efficacy of LEDs has improved to such a degree that this technology is now used for all types of AGL, including signs, high intensity edge lights, high intensity approach lights, runway guard lights (see Figure 12-1).

12.3 COLOUR — CIE S 004/E-2001

12.3.1 One of the advantages of LED light sources, in comparison to incandescent lighting, is that the colour of the output device is relatively stable with dimming. That is, the colour does not shift in chromaticity as the current is reduced for dimming. This has made possible the adoption of the CIE standard S 004/E-2001 "Colour of Light Signals" with some modification for the colour white (blue boundary). The Annex 14, Volume I, has two diagrams; Figure A1-1(a) for incandescent lighting (filament-type lamps) and Figure A1-1(b) for solid state lighting. The colour boundaries for incandescent lighting in Figure A1-1(a) are those of CIE 2.2-1975 "Colours of Light Signals". It is anticipated that eventually incandescent technology will be completely replaced by solid state technology and only Figure A1-1(b) for solid state lighting would remain in Annex 14, Volume I.

White and variable white

12.3.2 The AGL for approach, runway edge, runway touchdown zone and centreline are specified in Annex 14, Volume I, as being "variable white" in colour. The chromaticity boundaries are shown in Figure 12-2. "Variable white" is any colour from $x = 0.285$ up to the boundary of the yellow area of $y = 0.790 - 0.667\,x$ and is the range of whites that exist along the correlated colour temperature line or Planckian Locus from about 10 000 degrees Kelvin to about 1 900 Kelvin and includes the ICAO white, which ends at $x = 0.500$ following the specified boundary equations of Appendix 1. The Planckian Locus is representative of the colour change that occurs as incandescent lighting is dimmed and the filament takes on a more yellowish tinge as it is cooled to lower temperatures.

Figure 12-1. Types of LED lighting

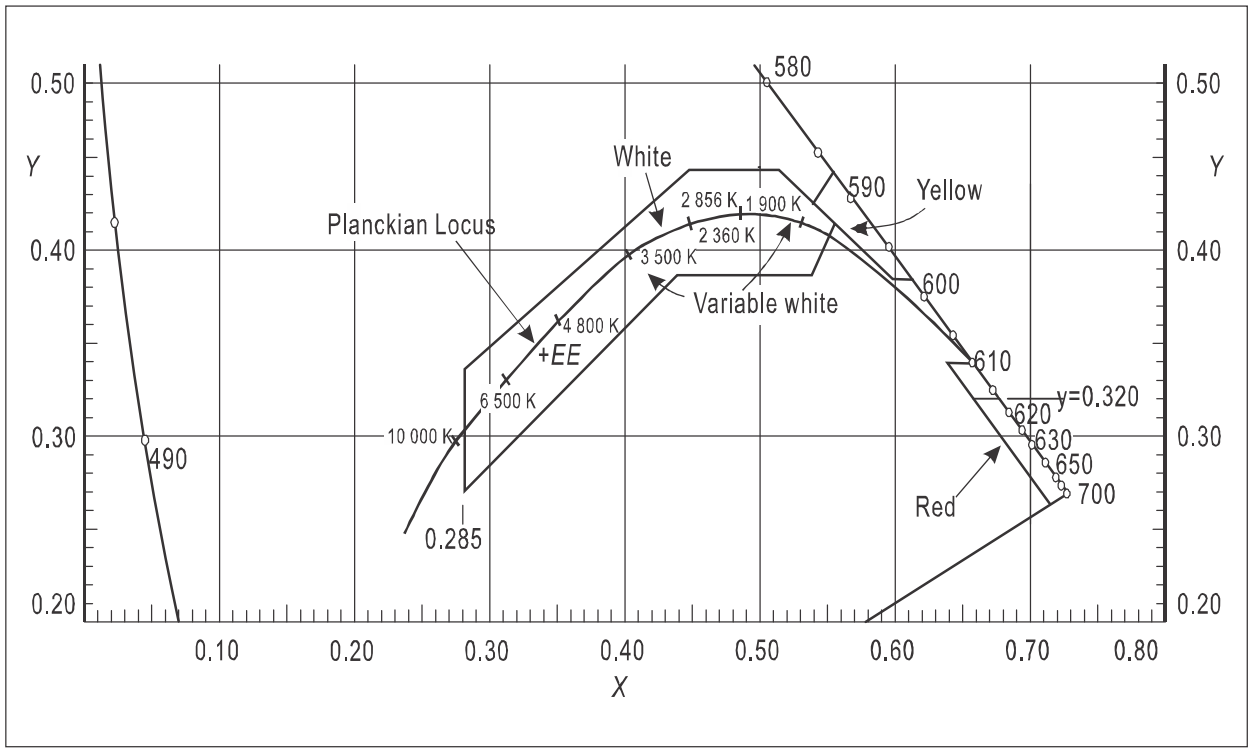

Figure 12-2. White and variable white for incandescent lighting

12.3.3 In the case of LED lighting whose colours are relatively stable with dimming, the specification for "variable white" is to be interpreted as "white" for which the colour boundaries are shown in Figure 12-3. The green and purple boundaries of white are the same as that for incandescent lighting. The blue boundary is moved to x = 0.320 to give further separation from blue. The yellow boundary is at x = 0.440 which is recommended by CIE S 004.

Yellow

12.3.4 The yellow for solid state lighting is that of CIE S 004 for which the green boundary is extended to y = 0.727x + 0.054 to include the ITE (Institute of Traffic Engineers) yellow.

Red

12.3.5 The red for solid state lighting is that of CIE S 004 and is the same as for incandescent lighting. Note that the red for PAPI light units continues to be limited to an upper boundary at y = 0.320 in accordance with Annex 14, Volume I, 5.3.5.14 and 5.3.5.30.

Blue

12.3.6 The blue for solid state lighting is approximately half that for incandescent lighting to give further separation from the bluish-green portion of the green chromaticity area.

Green

12.3.7 The green for solid state lighting is similar to that for incandescent lighting except that the white boundary is now the latter's restrictive white boundary (x = 0.625 y - 0.041) to give better recognition from white. The blue boundary is changed to y = 0.400 to give better recognition from blue. The yellow boundary is straightened to x = 0.310.

12.4 LIMITING SELECTION FOR SHADES OF GREEN

The green chromaticity area is relatively large in comparison to that of other colours and contains a range of shades from yellow-green to blue-green separated by the restrictive boundary y = 0.726 - 0.726 x. In order to avoid a too large variation of shades within the same lighting system, if the site selects lights having a green colour in the yellow-green portion of the chromaticity area, it is recommended that greens from the blue-green portion should not be used within the system and vice versa. This requires that airport design staff have a knowledge of colour specification.

12.5 INFRASTRUCTURE — SERIES CIRCUIT

12.5.1 The typical infrastructure for airfield lighting with incandescent fixtures has been a series-type circuit having a constant current regulator, high-voltage cable, and a multiplicity of AGL transformers. The light units are connected to the low voltage secondary side of the isolating transformer. LED light units can be procured for simple placement into this circuit. As shown in Figure 12-4, the LED light unit is composed of ratio transformer, bridge rectifier and a converter which contains a microprocessor for control of the intensity of the LED. This figure does not show surge suppression components for lightning and transient protection.

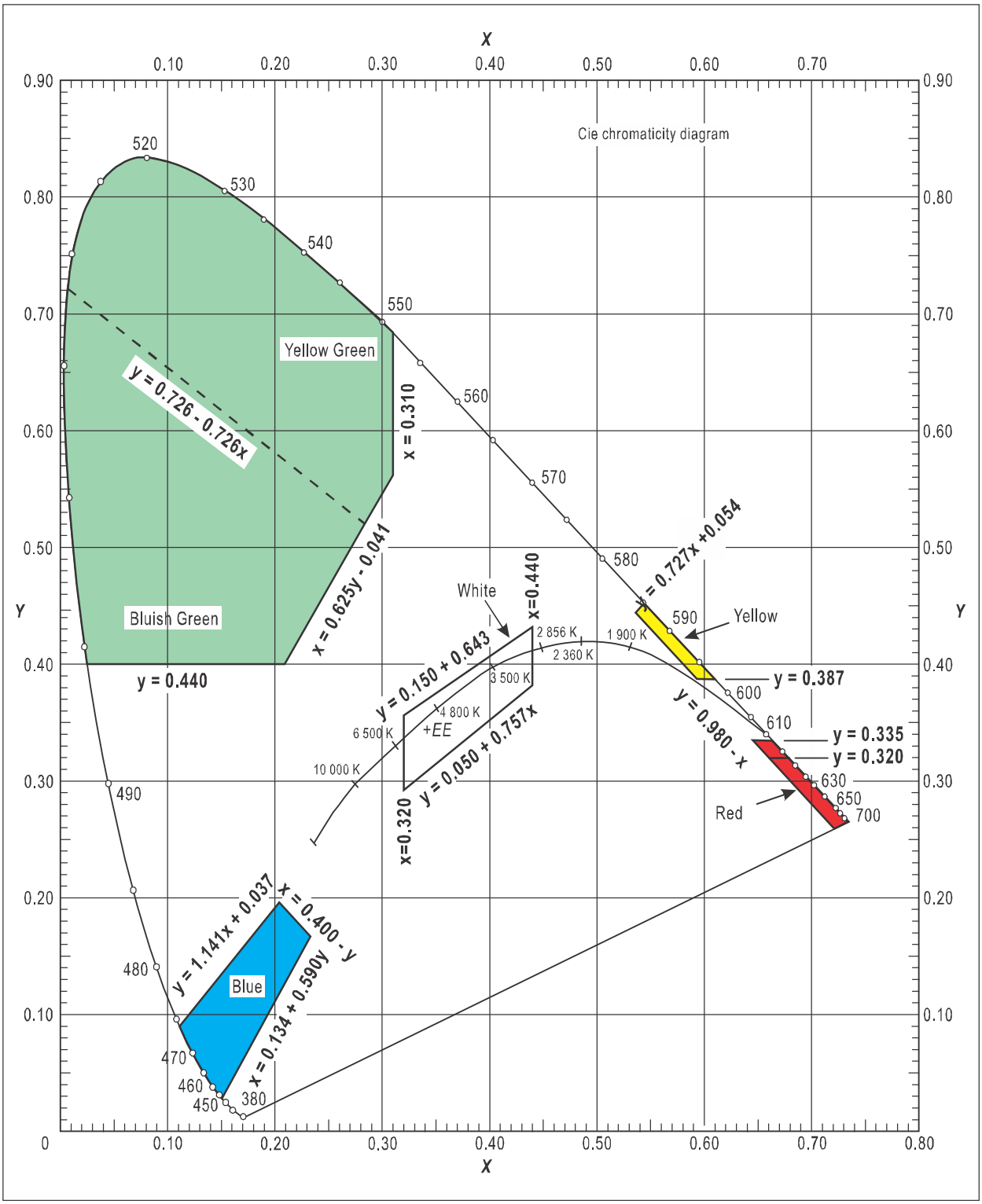

Figure 12-3. Chromaticity boundaries for solid state colours

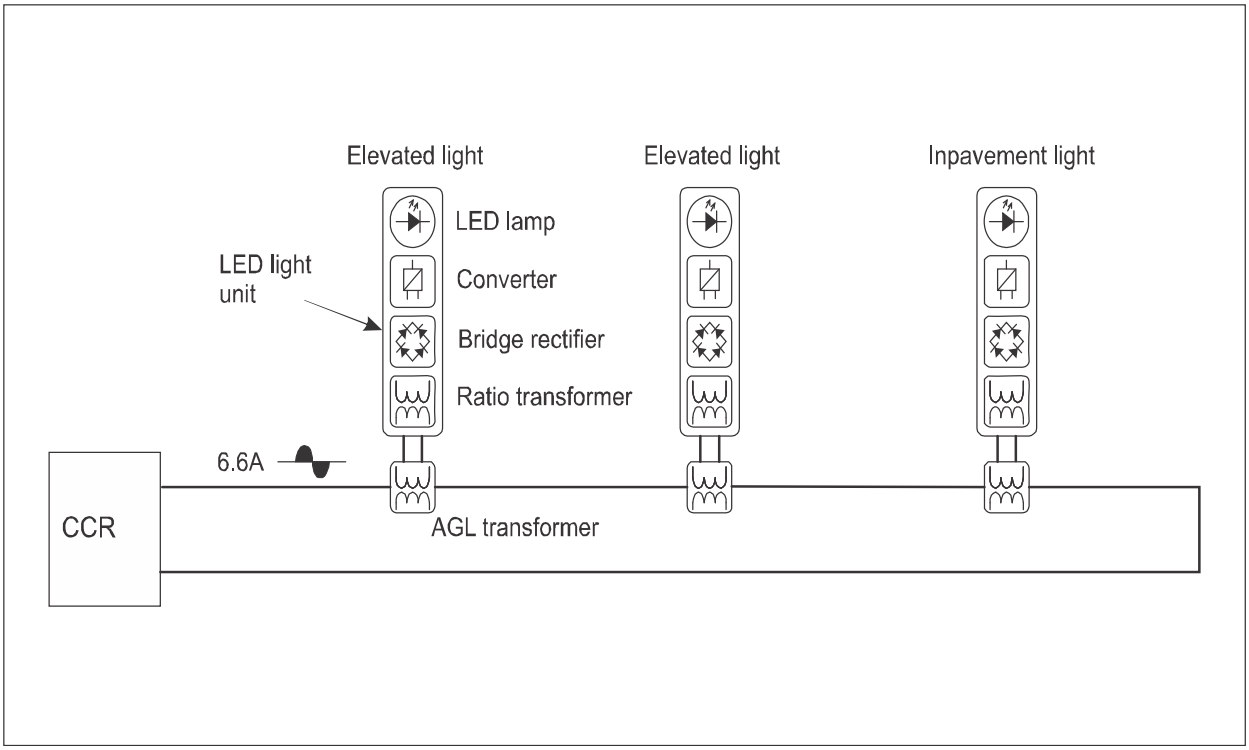

Figure 12-4. Series circuit LED lighting

12.5.2 The ratio transformer provides a current level (e.g. 660 ma) that is useable by the LED lamp. As an alternative, the function of the ratio transformer could be combined with that of the AGL transformer to have a single device with a turns ratio of 10:1.

12.5.3 The bridge rectifier changes the AC secondary current to DC.

12.5.4 Note that a by-pass device is not needed for either in-pavement or elevated LED lights since the constant current regulators are specified to operate properly when up to 30 per cent of the lights have open secondaries.

12.5.5 The electronic converter provides an input to the LED. In as much as it is desired to operate the LED at its nominal rating, the converter uses pulse width modulation (PWM) to cause a change of intensity. The algorithms cause the LED light to simulate the performance of a conventional incandescent lamped fixture (see 12.9).

12.6 PULSE WIDTH MODULATION

LED lamps are normally operated at their full nominal current. Intensity change (dimming) is accomplished through means of pulse width modulation (PWM). As shown in Figure 12-5, the input waveform is altered by changing the width of the pulses to produce high, medium and low intensities. The amplitude of each pulse is at the nominal rating of the LED lamp.

12.7 INFRASTRUCTURE PARALLEL CIRCUIT

LED lighting has also been applied using a parallel circuit design as illustrated in Figure 12-6. The components of the light unit are somewhat simplified. This circuit design has advantages of increased power efficiency and ease of control. There is also the advantage of simplification of maintenance practices and safety regulations for low voltage installations on the airfield side.

12.8 ALTERNATE INFRASTRUCTURE

12.8.1 Whilst the individual LED fixtures require considerably less electrical energy in comparison to incandescent lamped fixtures, with use of a conventional circuit there is still the energy consumption of CCRs and AGL transformers. Energy consumption of CCRs can vary with the type of architecture present in the CCR. For example, ferroresonant CCRs typically maintain good input power factor and efficiency when lower LED loads are substituted. However, SCR (i.e. Thyristor) CCRs typically impose almost the same load on the incoming power source when a lower load is substituted on its output. These CCRs typically have taps that can be adjusted to increase efficiency when lower loads are present. Also, AGL transformers can operate acceptably well if a lower LED load is substituted. However the AGL transformer will have its best efficiency if a lower wattage transformer is substituted that matches with the lower load of the LED fixture. Also, most CCR designs, particularly older models with incoming high-voltage transformers, have a fixed minimal charging current when energized, regardless of the connected load. Thus, the full economies possible with LED design are not actually taken advantage of. This raises the possibility of radically changing the lighting circuit design to some alternate infrastructure as shown in Figure 12-7.

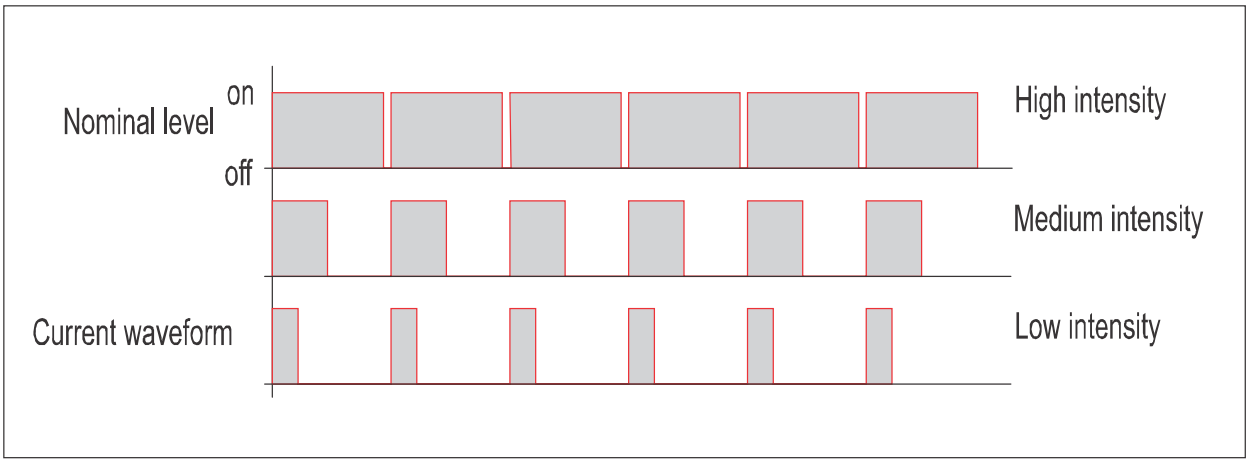

Figure 12-5. Intensity control by PWM

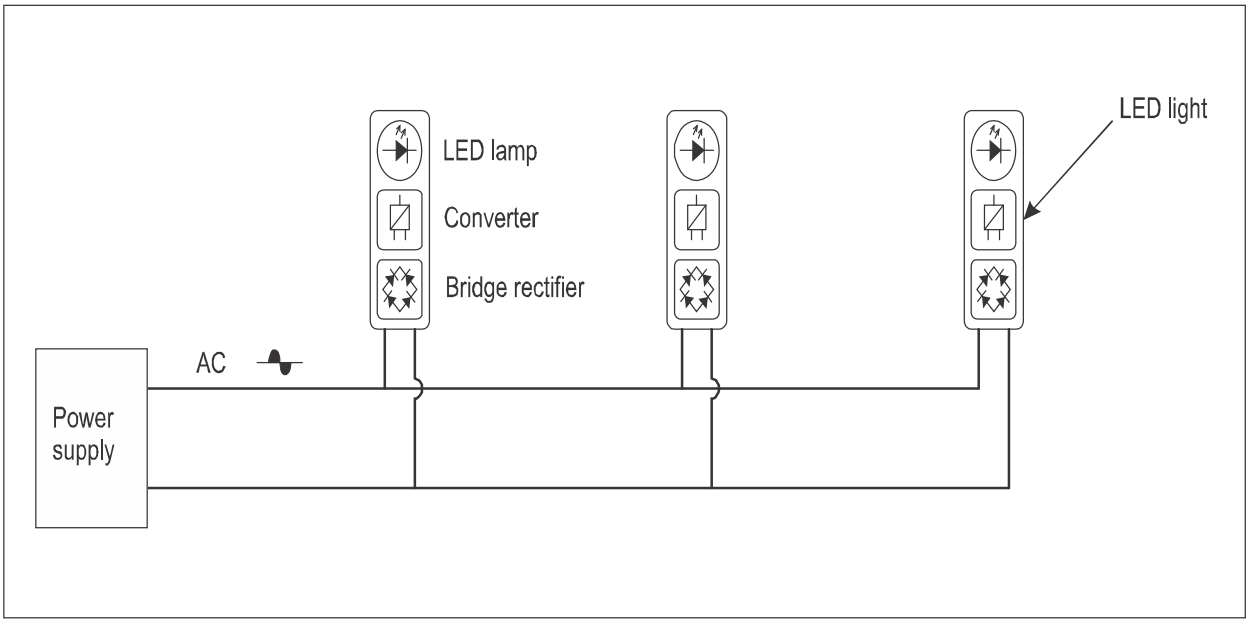

Figure 12-6. Parallel circuit for LED lighting

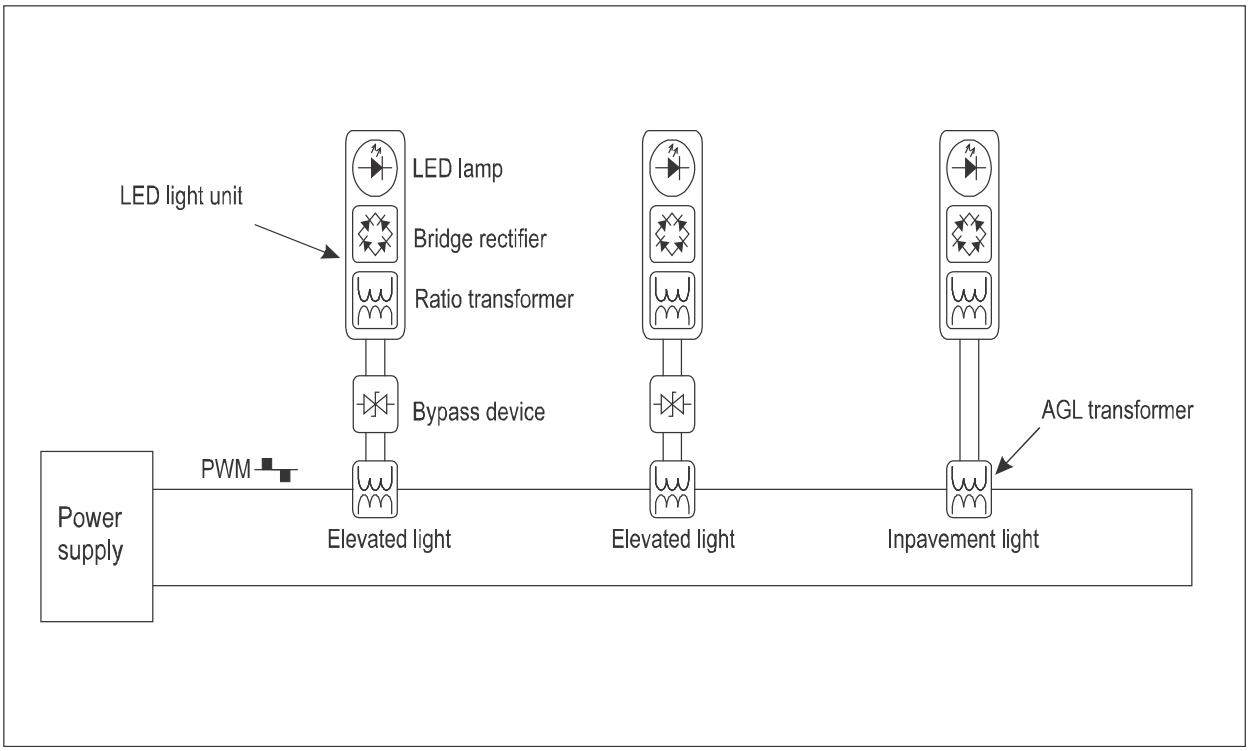

Figure 12-7. Use of a power supply to produce PWM output

12.8.2 The basic design principle for the alternate infrastructure is to allocate the PWM function to the power supply rather than to have this occur within each light unit. The specialized power supply, having an output in the order of 2 A can then be of a 19-inch rack-mountable design which is significantly smaller in size and footprint than a conventional constant current regulator. The output of the power supply is alternating in order to pass through the AGL transformers which are still needed to ensure there is isolation between the fixture and the series circuit. A bridge rectifier is provided within each fixture to produce a DC input to the LED lamps. A by-pass device is used for elevated fixtures so as to avoid open circuited secondaries on the AGL transformer, should the light unit be knocked over, which may affect the primary circuit waveform. A by-pass device is not needed for in-pavement lights as they are not subject to knock-overs. Due to the reduction in overall system complexity, the system MTBF is greatly increased. The design allows reuse of an existing series circuit cable although other cables might be used (see Figure 12-8).

12.9 BRIGHTNESS SETTINGS

Note.— The following section examines the practice of one State. The practice of other States may differ.

12.9.1 The conspicuity of a light source will always be relative to the context in which it is viewed. The contrast between the light source and the background, or light noise in which it is viewed will have an impact upon the perceived conspicuity. The ability to detect a lighted cigarette at a significant distance in pitch darkness is an extreme example of this. The lack of spectral bandwidth in an LED light source enhances the contrast with surrounding noise (including the scatter effect of low visibility conditions) enabling greater conspicuity for a given luminosity.

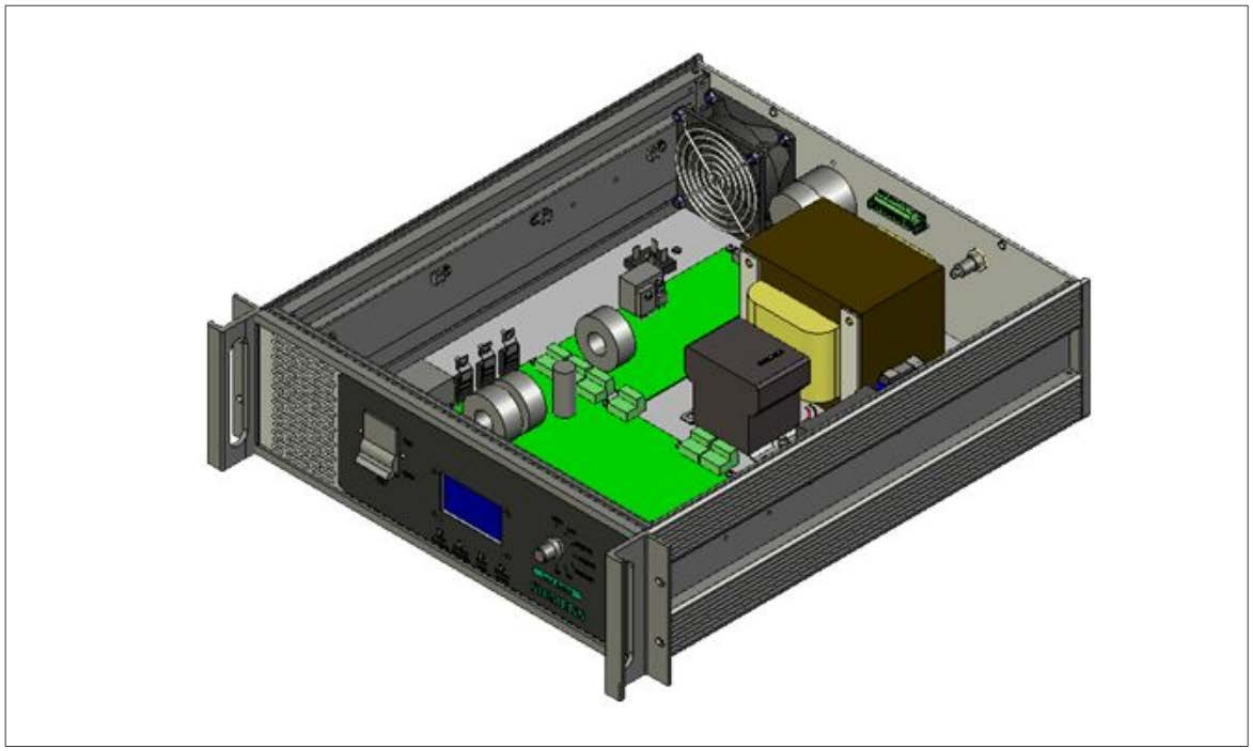

Figure 12-8. PWM power supply (source: ADB Airfield Solutions)

12.9.2 It is desired that a LED light unit should perform in the same manner as the incandescent light unit. However, as shown in Figure 12-9, the natural LED response to current input is linear as compared to that of an incandescent light whose response curve is exponential because it is the result of filament heating. For example, an incandescent light unit that is operated at 5.2 A should produce an intensity which is about 25 per cent of full intensity. The LED light on the other hand, which operates at 5.2 A (input from the isolating transformer), would produce about 79 per cent intensity. If the LED light were to be driven directly so that it produces 25 per cent intensity, a current of about 1.6 A would be used. Note that the chart and current values relates to 3- and 5-step systems. Systems which have six or more steps would have different current values for each step.

12.9.3 The performance of the incandescent light can be defined in terms of the minimum/maximum range of the dimming curve as shown in Figure 12-10 for white light. The steps for a 5-step constant current regulator are 6.6, 5.2, 4.1, 3.4 and 2.8 A. For a 3-step regulator they are 6.6, 5.5 and 4.8 A. The dimming curves for incandescent lighting are displaced at 4.8 A and 5.5 A as reflects the historical development of 3-step systems.

12.9.4 In order to mimic the performance of the incandescent light, the algorithms of the electronic component of the LED fixture are such that the intensity output is within a minimum/maximum range which is near that of the incandescent light, with exception for the lower steps. The range is reduced for the lower steps because of reports that the LED light appeared to be too bright at these steps. The dimming curves for incandescent lighting are displaced at 4.8 A and 5.5 A to reflect the current/brightness values specified for 3-step systems. Note that the curves converge at 6.6 A. All lights, either incandescent or LED begin at 100 per cent and the curves are read from the top down.

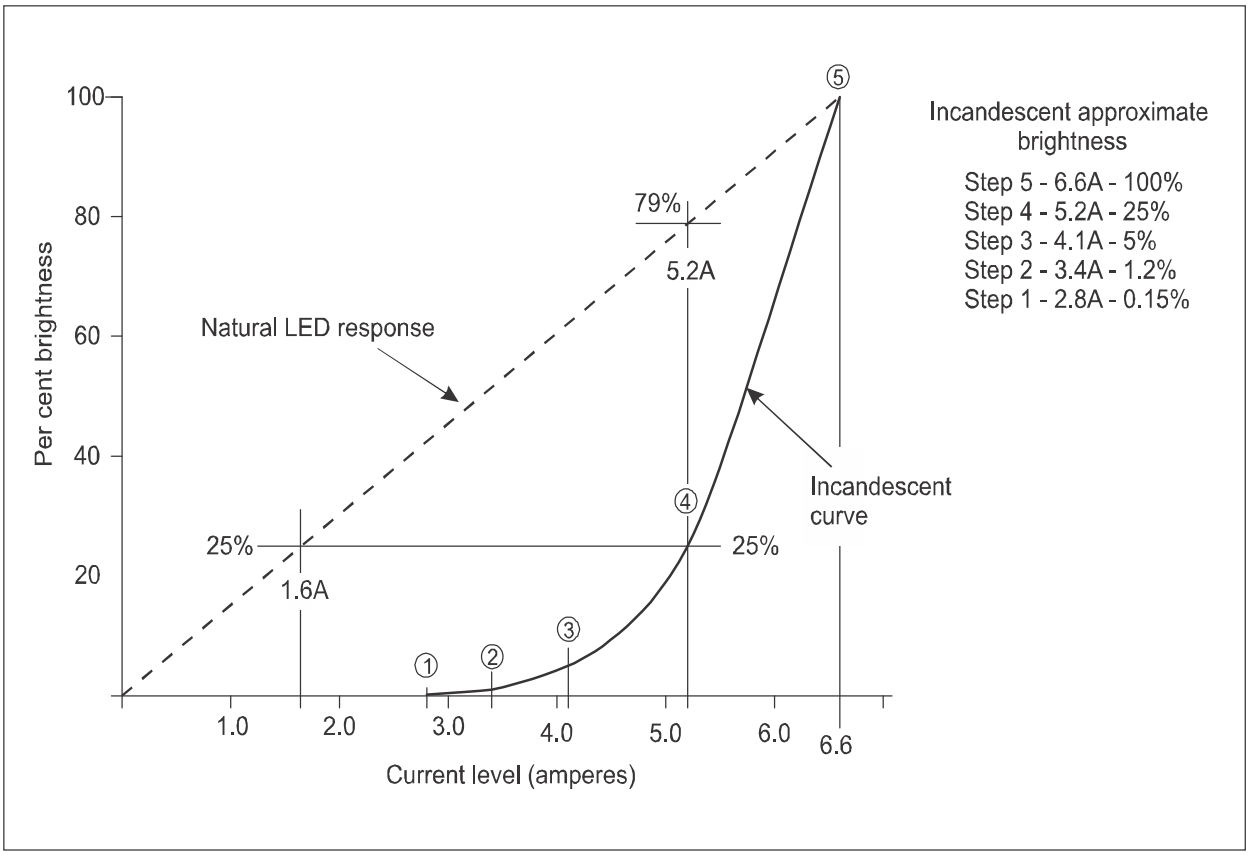

Figure 12-9. LED and incandescent lighting response curves

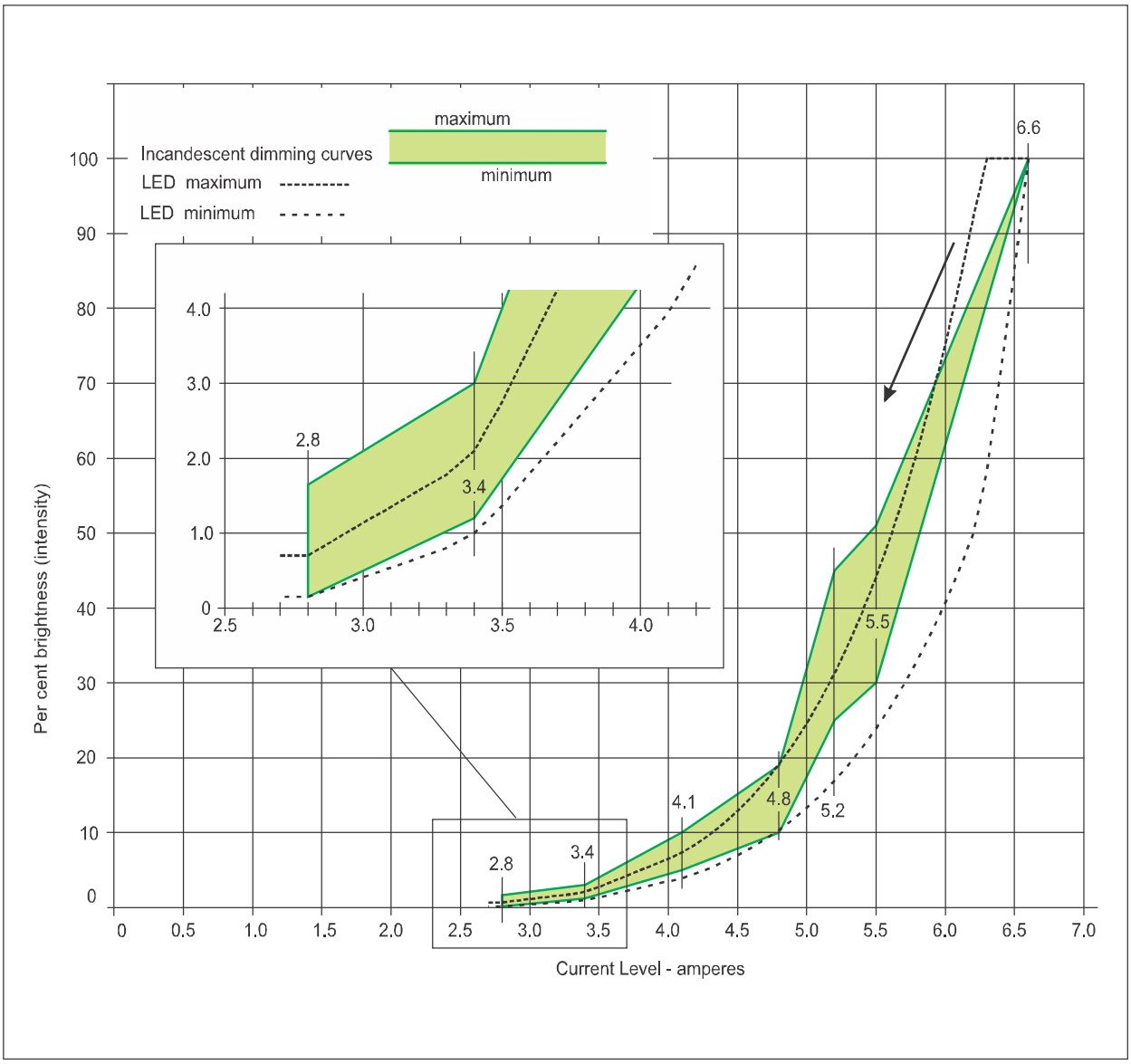

Figure 12-10. Dimming curves, white light

12.9.5 The need to address current/brightness performance at the lower steps is applicable only to white light. For coloured light, the minimum/maximum range follow the incandescent curves as shown in Figure 12-11.

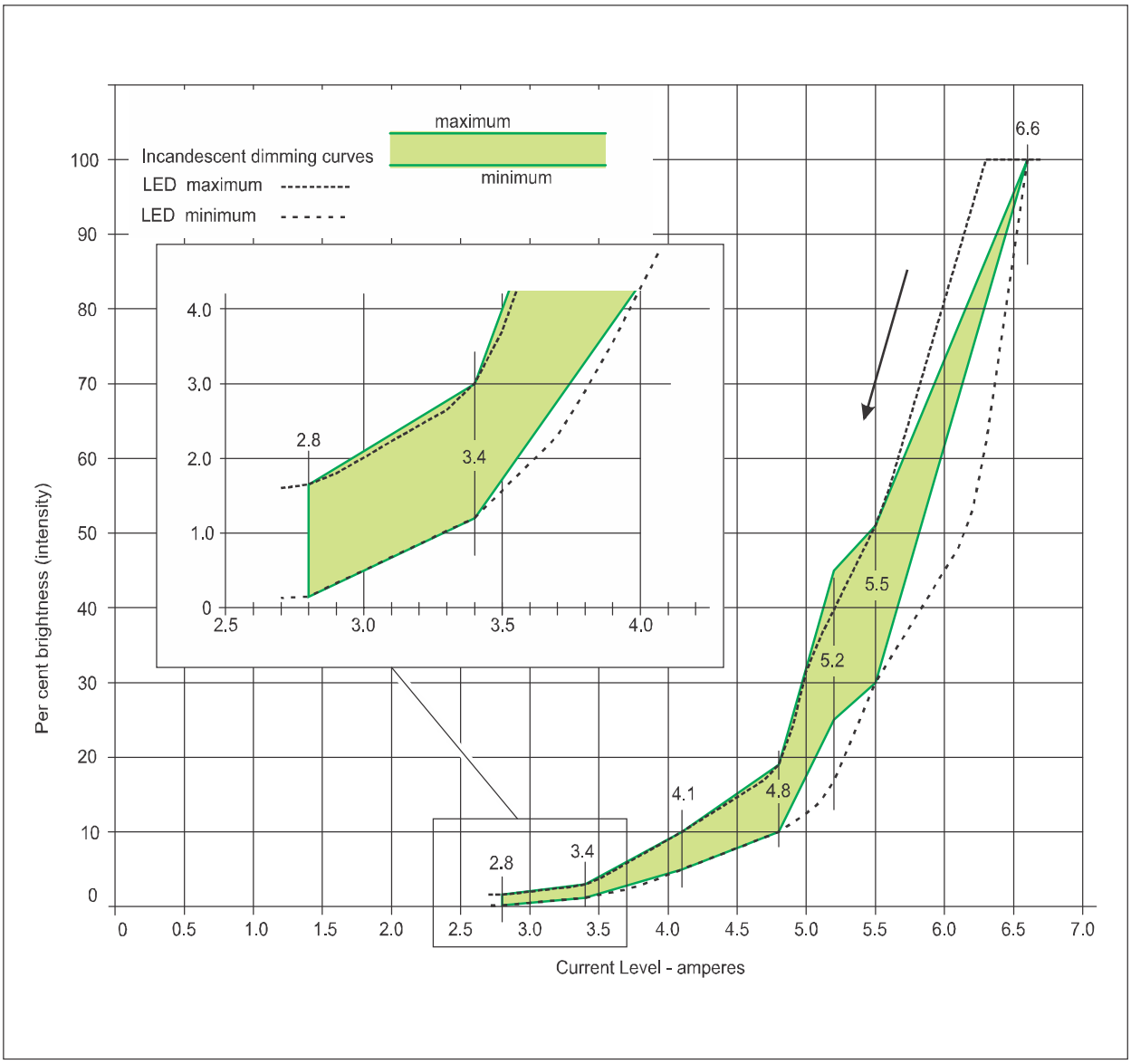

Figure 12-11. Dimming curves, coloured light

12.10 LED LIGHTING AND NIGHT VISION SYSTEMS

12.10.1 Night vision systems were initially developed during World War II for battle tanks to provide night vision shooting capability and later reduced in size for rifle-mountable systems favoured by snipers. Technological improvements further reduced the components and power requirements to the point where the systems eventually could be helmet mounted (see Figure 12-12).

12.10.2 Basically there are two forms of night vision equipment, depending on the technology used:

a) *Thermal imaging* operates by capturing the upper portion of the mid-infrared light spectrum ranging from 1 300 NM to 5 000 NM which is emitted as heat by objects instead of simply reflected as light. This technology is known as enhanced vision systems and used in aircraft fitted with a forward-looking infrared radar (FLIR) and a head-up display (HUD).

b) *Image Intensifier [I^2]* works by collecting the tiny amounts of light, including the lower portion of the infrared light spectrum, that are present at night but may be imperceptible to our eyes, and amplifying it to the point that we can easily observe the image. Aviators night vision imaging system/night vision goggles (ANVIS/NVG) are image-intensifying systems, allowing the pilot to see under conditions that normally would look impenetrably dark to the unaided eye. Military requirements for night combat, search and rescue, and surveillance operations drove the development of these systems, which eventually spun off into many civil applications.

12.10.3 In the case of thermal imaging, the response curve for the FLIR begins at around 1 300 NM and as such no LED light will be seen unless it is specifically designed with a device to generate an infrared (IR) signal of sufficient wavelength and radiance.

Figure 12-12. Night vision goggles

12.10.4 As shown in Figure 12-13, the ANVIS/NVG consists of an objective lens, photocathode, microchannel plate (MCP), phosphor screen and viewing lens.

12.10.5 Image intensifier systems have evolved over time and the various versions of development are referred to as "generations". Third generation systems have a spectral response curve that begins around 550 – 575 NM and extends over the portion of the spectrum in starlight and not visible to the unaided human eye (CIE Photopic Curve), as shown in Figure 12-14.

12.10.6 The MIL-STD-3009 defines standards for designing and measuring ANVIS/NVG-compatible lighting in the cockpit. If the lighting in the cockpit is not compatible, it can generate enough energy in the near infrared to affect the automatic gain control of the ANVIS goggles resulting in blinding the pilot to the less-illuminated outside scene. Thus the cockpit instrumentation is provided with illumination whose energy is in the lower portion of the spectrum (blue and green) and outside the ANVIS response curve. Also, to further reduce any overlap, the response curve itself is narrowed by the use of filters added to the objective lens, identified as Class A and Class B as shown in Figure 12-15 and Figure 12-16. Class B further narrows the response curve to enable the use of some yellow and red lighting in the cockpit. Class B is commonly used by civilian helicopter pilots.

12.10.7 With respect to LED lights used for aeronautical ground lighting, whether they are seen by pilots using ANVIS/NVG is dependent upon the spectral distribution of the light and thus the amount of overlap. A generation III without filters will likely allow viewing of green, yellow and red LED lights. With a Class A filter, viewing of yellow and red lights is likely. With a Class B filter, viewing of any LED light is unlikely. The likelihood of viewing a light is dependent upon the spectral distribution and it might be possible to view even a green light if it has a radiant energy component that is in the near infrared. But this is happenstance since current Standards only specify the perceived colour and not spectral distribution.

12.10.8 A present disadvantage of ANVIS/NVG is that the produced image to the pilot is monochromatic green, making it difficult to distinguish the colour-coding required by Annex 14, Volume I. In the case of obstacle lighting, if the light is viewable, as is the case for incandescent lighting, it is lost amongst the other culture lighting in the environment, as shown in Figure 12-17.

12.11 LINE LIGHTING

LED technology offers the possibility of new forms of lighting for aerodromes. For example, by encapsulation of multiple LEDs, a light strip (line lighting) can be produced and which can be used to enhance markings as shown in Figure 12-18 for a helipad. One of the advantages of line lighting is that it has an inherent directionality which is not obtainable for point source lighting unless one installs at least three lights in a row.

12.12 MIXING TECHNOLOGIES

12.12.1 LED fixtures contain electronics to ensure that its response will mimic that of incandescent lighting. Yet even though the response is made the same, it is not recommended that LED and incandescent lighting be mixed, for reason that the LED fixture can produce a different visual display. In particular, the LED fixture produces a saturated colour that remains essentially the same with brightness step selection whereas incandescent lighting will tend towards yellow as the filament is operated at a cooler temperature.

12.12.2 Figure 12-19 shows a picture of an installation of lighting within a threshold that has conventional incandescent lighting. The picture is illustrative of a perceptual problem that may occur where there is a mixture of technologies.

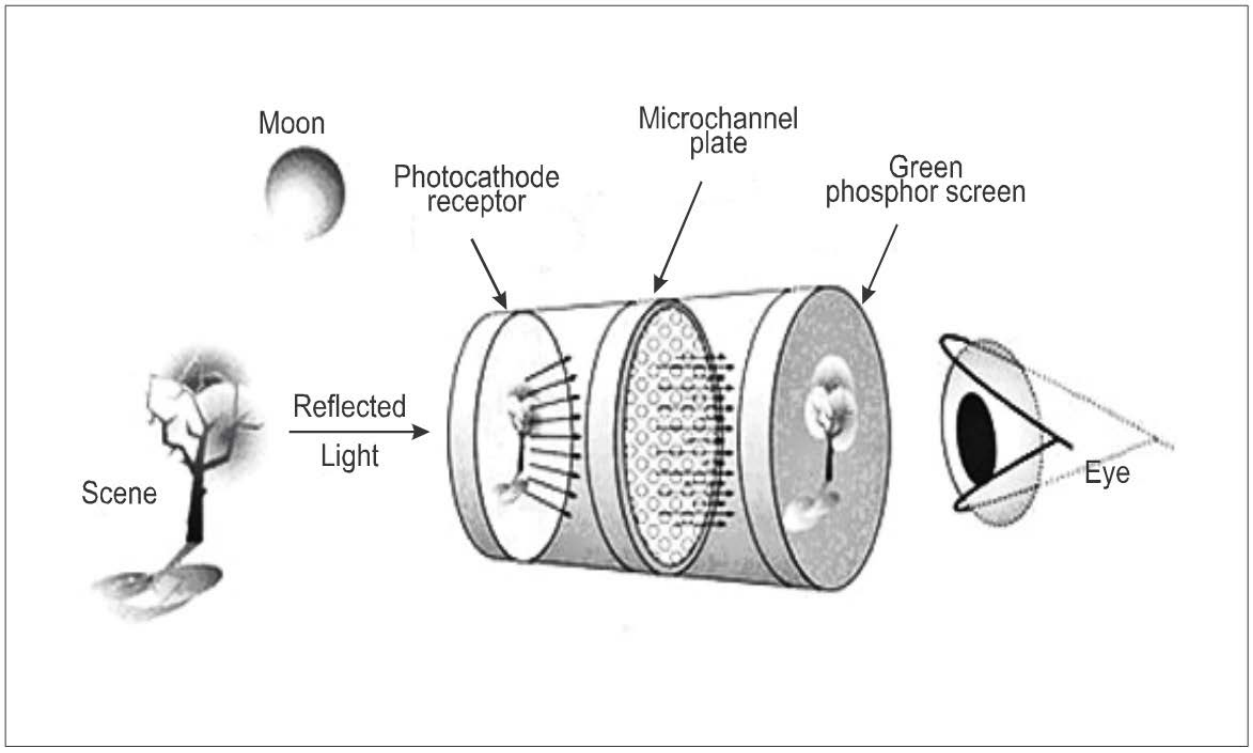

Figure 12-13. Typical NVG image intensifier tube and optics (source: AG Displays)

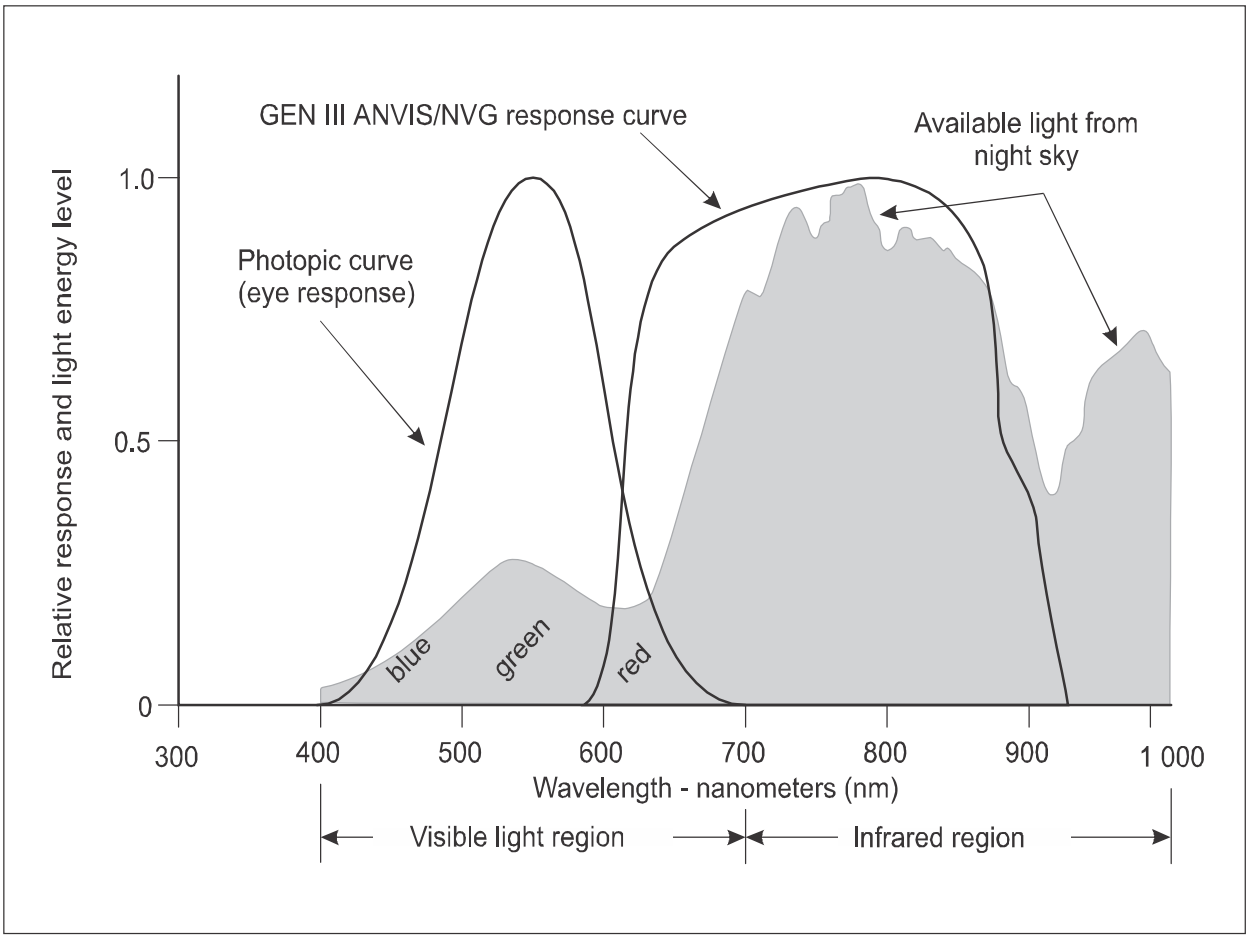

Figure 12-14. Response of GEN III ANVIS/NVG night vision goggles with respect to night sky radiation (source: Gamma Scientific)

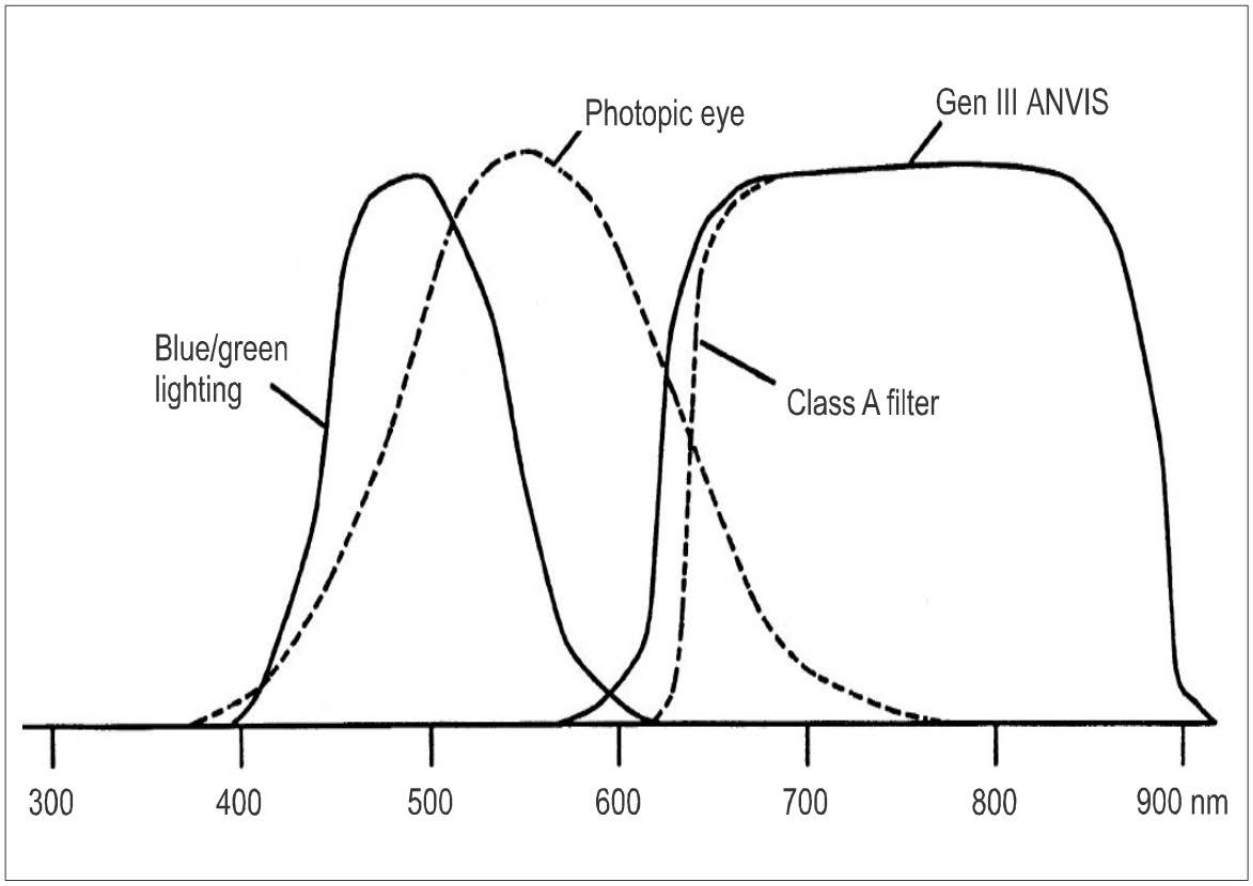

Figure 12-15. Class A filter allows blue/green cockpit lighting (source: Dennis L. Schmickley, Boeing Helicopter Co.)

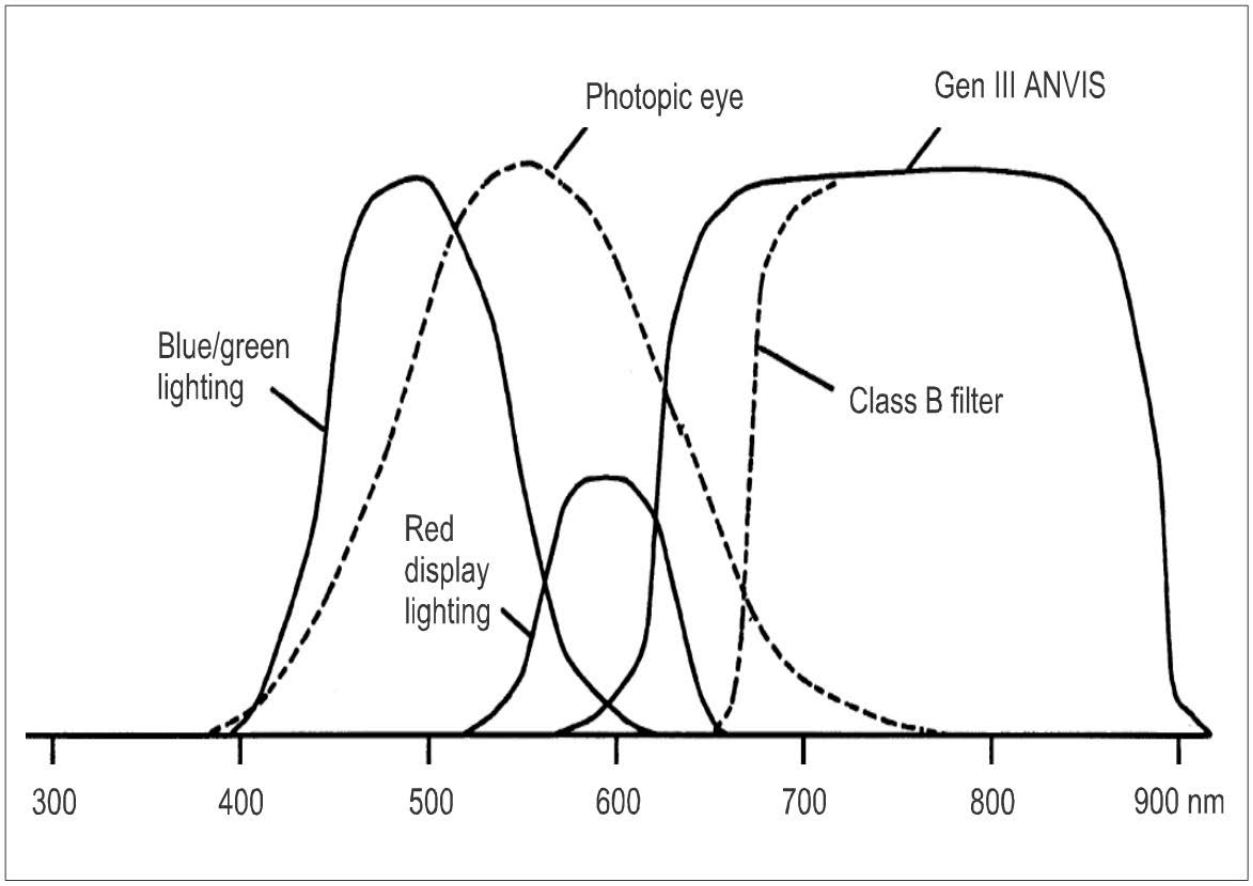

Figure 12-16. Class B filter allows blue, green, yellow and red cockpit lighting (source: Dennis L. Schmickley, Boeing Helicopter Co.)

Figure 12-17. Obstruction light (circled) as seen through NVGs (source: National Research Council of Canada)

Figure 12-18. Helipad application of line lighting (source: CAA UK)

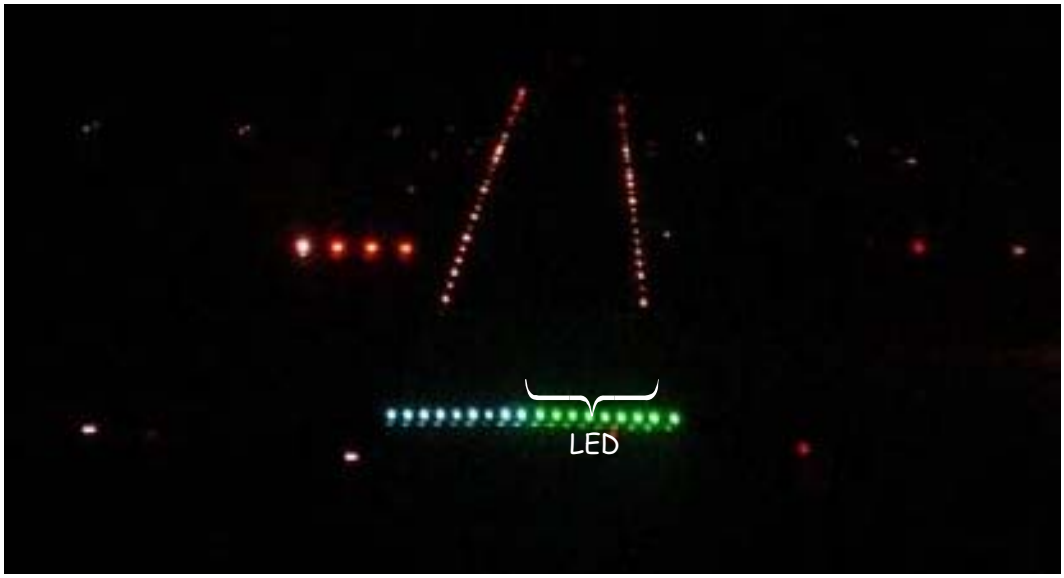

Figure 12-19. LED and incandescent threshold lighting

12.12.3 The following is a list of lighting facilities with respect to mixing LED and incandescent technologies:

a) *Elevated runway guard lights (RGL).* For individual installations, each pair of elevated RGLs on both sides of the taxiway should be of the same technology.

b) *In-pavement runway guard lights (RGL).* For individual installations, all the lights of an in-pavement RGL system should be of the same technology.

c) *Stop bars.* For individual installations all the lights of an in-pavement stop bar system should be of the same technology.

Note.— Where elevated supplemental stop bar lights are installed they should be of the same technology on both sides of the taxiway. However, they may be of a different technology than the in-pavement stop bar lights.

d) *Touchdown zone lights.* For individual installations, all the lights of a touchdown zone lighting system should be of the same technology.

e) *Runway centreline lights.* For individual installations, all the lights of a centreline lighting system should be of the same technology.

f) *Runway status lights (RWSL).* For individual installations, all lights of THL (take-off hold lights), REL (runway entrance lights) should be of the same technology.

Note.— RWSL may be of different technology than the runway centreline or touchdown zone lighting on the same runway.

g) *Runway edge lights.* For each individual installation, all the lights of a runway edge lighting system including the yellow portion within the end of the runway caution zone should be of the same technology.

h) *Runway threshold, end and stopway lighting.* For each individual installation, all the lights of the runway threshold, runway end and stopway should be of the same technology.

Note.— The lights of runway edge, runway threshold, runway end and stopway lighting may each be of different technology from that of the associated runway centreline and touchdown zone lighting.

i) *Signage.* Per location, sign elements making an array of signs should be of the same technology.

j) *Runway holding position signs.* Per runway holding position location, signs on both sides of the taxiway should be of the same technology.

k) *Intermediate holding position signs.* Per intermediate holding position, signs on both sides of the taxiway may be of different technology.

l) *Rapid exit taxiway indicator lights (RETIL).* Per individual installation, the lights of RETIL should be of the same technology.

m) *Precision approach path indicator (PAPI).* Per runway end, the light units of PAPI should be of the same technology. This includes where PAPI are installed on both sides of a runway.

n) *Approach lighting systems.* Per runway end, the white steady burning lights of an approach lighting system should be of the same technology.

Note 1.— All the lights of RAIL of an approach lighting system should be of the same technology, but may be of a different technology than the white steady burning lights.

Note 2.— All the lights of Category II/III red supplemental lighting should be of the same technology, but may be of a different technology than the white steady burning lights.

Note 3.— All the lights of the green threshold and wing bar lighting of an approach lighting system should be of the same technology, but may be of a different technology than the white steady burning approach lights.

o) *Taxiway lighting.* Taxiway lighting per "segment" should be of the same technology.

Note 1.— A "segment" is defined as a taxiway portion delimited by intersections with other taxiways or runways and the tangential points of the start/end of curves.

Note 2.— In the case of long taxiways serving a runway and with many intersecting taxiways, it may be preferable that all segments are of the same technology.

Note 3.— Taxiway centreline and edge lighting within a segment may be of different technologies.

12.13 HEATERS

The LED light unit has the benefit of very low power consumption. However, this also means a lower operating temperature that may be needed to maintain the fixture free of snow and ice cover and simple condensation that can alter the photometric distribution and colour. Manufacturers can provide a heater, sometimes referred to as an "arctic kit", for their LED light units. Whether a heater is needed is dependent upon the site location and the weather conditions to which it is exposed. In some instances, the low operating temperature is an advantage in that drifting snow does not melt and attach itself to the fixture lens. It is likely that LED PAPI will require some form of lens heater regardless of site location to ensure that condensation/icing does not occur.

12.14 MAINTENANCE

12.14.1 While LEDs could last for many thousands of hours under certain conditions, the life of the LED itself, and more importantly, that of the complete luminaire including the electronics, still depends on the system integration and the actual conditions in which the luminaire is used. Application conditions that could have an impact on the expected life of the luminaire include, primarily, the temperature of operation, on-off cycling patterns and humidity. Because LEDs do not have filaments that break or deteriorate, when operated under normal conditions, they tend to last for a long time. However, their light output decreases and the colour of their light shifts over time, with the rate of depreciation increasing at higher operating temperatures. The implication for practice is that at some point in time the loss of light output or the colour shift may render the LED source outside the specifications for a given application or purpose; while the LEDs may technically still be operating, they would no longer be considered useful[1].

12.14.2 Therefore, the long life of the LED in comparison to that of an incandescent lamp should not be taken as reason for "install and forget". A system of preventive maintenance should remain in place as the LED light does eventually fail. As well, there are other factors which can reduce performance such as contamination on the lens of in-pavement fixtures.

---

1. Alliance for Solid-State Illumination Systems and Technologies (ASSIST). 2005. *ASSIST recommends: LED Life for General Lighting*. Volume 1 Issues 1-7. Troy, NY: Lighting Research Center.

Chapter 13

UNDERGROUND ELECTRICAL SYSTEMS

Note 1.— Practices on underground electrical systems have been developed in many States to cope with soil and adverse weather conditions. States have also established detailed electrical installation standards in line with local practices. Installations of parallel-type (constant voltage) circuitry would generally follow local electrical codes.

Note 2.— The aim of this chapter is to provide guidance for installation of series-type (constant current) circuitry with explanations based on existing practices. In particular, detailed criteria such as dimensions, types of material and labelling should be considered as typical and not directly as a requirement.

13.1 GENERAL

13.1.1 The AGL underground circuitry is typically installed as shown in Figure 13-1. The primary cable is provided with lightning arrestors as required and may be with or without shielding. An equipment grounding system is provided for personnel safety (13.1.8 to 13.1.13 refer). A lightning protection system (LPS) by means of a counterpoise conductor (13.1.14 to 13.1.19 refer), is typically installed over duct and cables to be protected from lightning. Where an LPS is provided, an equipment ground is not required where the former also fulfils the function of personnel safety. According to local practice, lightning arresters may be installed for the ends of the system near the vault and in the primary circuit at suitable intervals or at selected light stations. The arresters are connected to individual ground electrodes, or to the available ground wire or LPS counterpoise.

13.1.2 Installation of the light station equipment on the secondary side varies according to local practice as shown in Figure 13-2. The schematics (c), (d) and (e) show connection of the ground system to the secondary side of the AGL transformer. The schematics (a) and (c) show the case where the light unit or optical assembly is installed on the transformer housing. Schematics (b) and (d) show installation of the light unit on a mounting stake, sometimes referred to as an anchor stake, with adjacent direct burial of the AGL transformer. Schematic (e) shows the light unit on a mounting stake and the AGL transformer installed in a separate housing which may be non-metallic. In such a case, the equipment grounding is completed by a ground jumper provided to the metallic cover plate of the transformer housing. The schematic (f) shows the installation of a ground jumper to light units such as PAPI or airside guidance signs.

Shielded cable

13.1.3 Where shielded cable is used in a constant current series circuit for electromagnetic compatibility (EMC) purposes, the shield should be continuous throughout the loop and earthed at the ends of the primary series circuit to the vault ground ring as shown in Figure 13-3. Cable shields also provide some protection against insulation deterioration due to high-voltage stress and it is recommended that the shield be earthed at every practicable point. The shielding should be made continuous through the light station by bonding the incoming and outgoing cables as shown.

13.1.4 The installation of underground electrical systems provides five fundamental components: the primary cable, AGL transformer, secondary wiring, the mounting means, and an equipment grounding or lightning protection system (LPS).

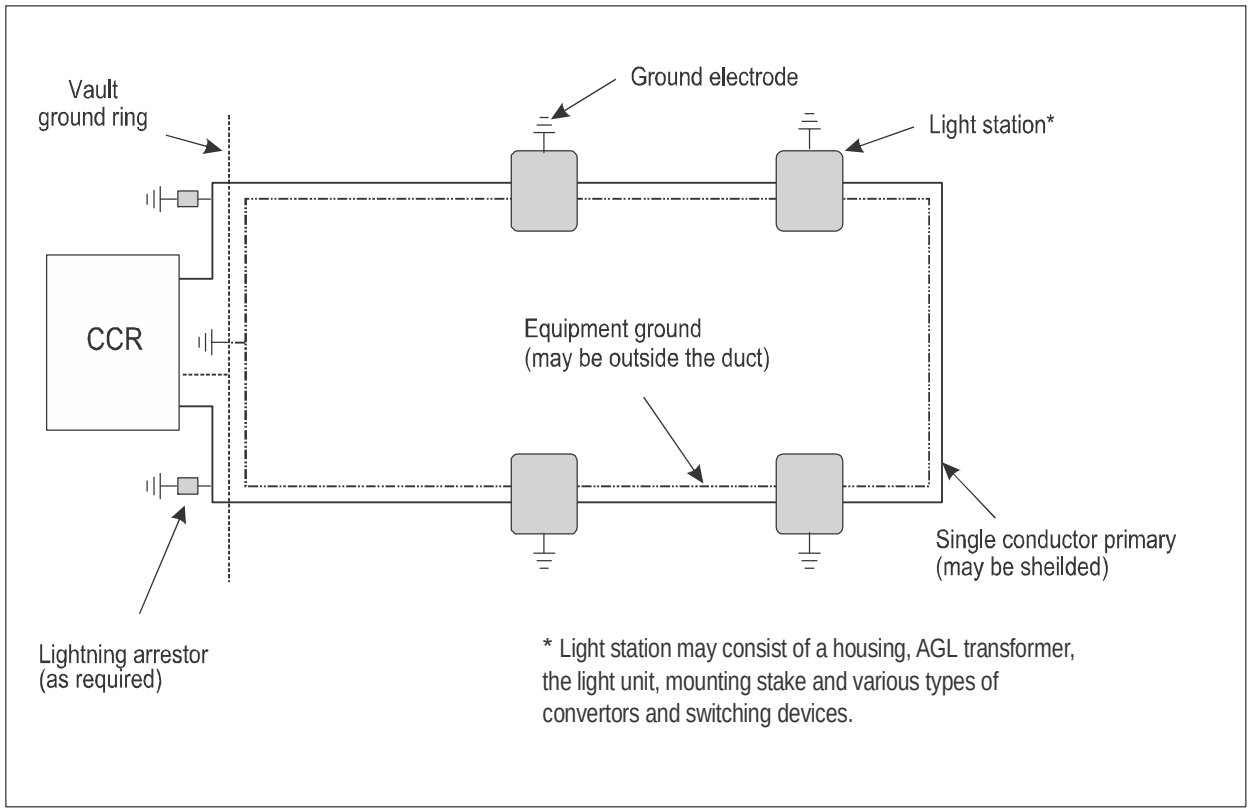

Figure 13-1. Typical constant current series circuit

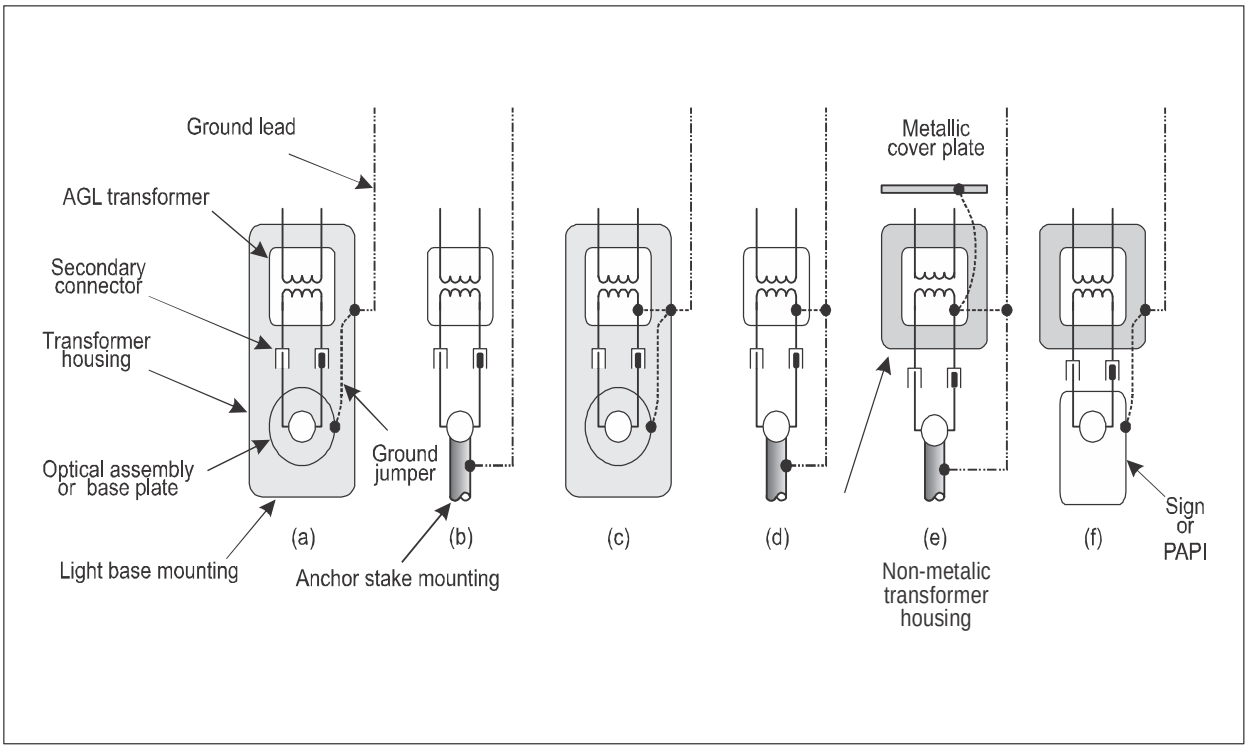

Figure 13-2. Light station equipment installation

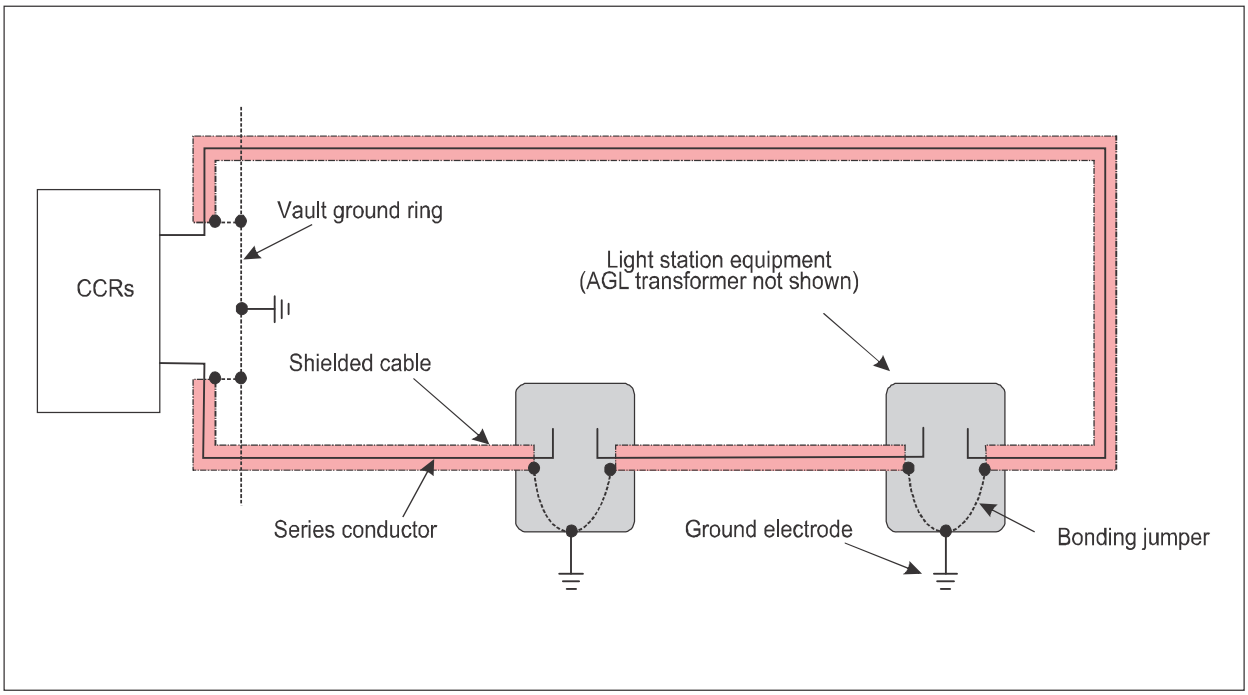

Figure 13-3. Continuity bonding of shielded cable

Primary cable

13.1.5 The installation of primary cable from the CCR to and between the light stations can be done through means of direct burial or placement within a conduit. The latter is preferred in that it provides protection against soil movements and facilitates future cable replacement. If the conduit is of sufficient size it can be used for later installation of additional cable. It is desirable that cables of interleaved circuits be installed in separate ducts.

Secondary wiring

13.1.6 For secondary wiring from the AGL transformer to the light fixture: if the light unit is located remote from the housing, the loading represented by this secondary wiring should be taken into account (0 refers). For in-pavement lighting of the shallow base type, the secondary wiring may be installed directly in saw cuts or in a conduit. A conduit is preferred as it facilitates later maintenance.

Light unit mounting

13.1.7 The mounting of the light unit is either by means of a stake or on top of a housing. The tendency is to use housings, rather than direct burial, since the housing enables ease of maintenance of the AGL transformer. The housing may be metallic and intended for paved areas or non-metallic (plastic or concrete) and intended for unpaved areas. The light fixture may be installed on an anchor stake with the transformer in a nearby housing, on the housing itself, or separately on a shallow base receptacle. If an elevated light is to be installed on a housing, then the latter should be encased in a concrete pad to obviate movement. For small aerodromes and medium intensity lighting, slight movement of the housing may be tolerated. At some airports the transformer housing is installed as a locked cabinet attached to the lower portion of approach light towers. This manner of installation eliminates the problem of water ingress where the approach lighting system extends across areas having a high water table such as a marsh. It is sometimes desirable to co-locate AGL transformers such as for the barrettes of touchdown zone lighting. In this instance, the transformers are installed together in a single housing and arranged on a shelf attached to the wall of the housing. (An installation of multiple AGL transformers is illustrated in Figure 13-21.)

Equipment grounding system

13.1.8 The purpose of the equipment grounding system is for personnel safety in case of a shorting ground fault. In contrast to parallel (voltage) circuits, the protective devices of the constant current regulator do not react to shorting faults so as to de-activate the lighting system. The series circuit is ungrounded and will operate normally with a single ground fault. Depending upon the resistance value and location of faults, a segment of the lighting will go out or be dimmed with occurrence of a second ground fault; the regulator, however, will continue to provide an output current.

13.1.9 The accepted method for providing equipment grounding is the “equipotential method” by which a ground wire is connected to all metallic elements on the output side of the constant current regulator including light bases, fixture mounting stakes and routed back to the ground ring at the electrical vault so that these elements are maintained at the same earth potential.

13.1.10 The equipment ground is provided by means of an insulated or bare conductor and is continuous from the light unit or light base, or via the transformer housing if shallow base installations are used, through to the system ground at the electrical vault. The equipment ground wire is normally installed within the duct system, as an insulated wire, but can be direct buried as a bare wire outside the duct. The system should be connected to a ground electrode at each light station or at intervals 150 m to 300 m.

13.1.11 The equipment ground wire is typically of solid copper in sizes from 10 mm^2 (#8 AWG) to 25 mm^2 (#4 AWG). Other materials have been used such as galvanized steel. Suitability of wire material against corrosion in soils has to be carefully checked.

13.1.12 The complete equipment grounding system should have a resistance to earth no greater than that specified in the national code (typical maximum earth resistance values range between 6 to 25 ohms).

13.1.13 Where a lightning protection system (LPS) in the form of a counterpoise wire is used, the LPS may be used for equipment grounding and a separate equipment ground system may be omitted.

Lightning protection system

13.1.14 The purpose of the lightning protection system (LPS) or counterpoise system is to provide a low resistance preferred path for energy from lightning discharges to enter the earth and safely dissipate without causing damage to equipment or injury to personnel.

13.1.15 Using the equipotential method, the counterpoise conductor is bonded to all light bases, fixture mounting stakes and a vault ground ring so that all metallic elements are maintained at the same potential.

13.1.16 The counterpoise conductor is typically installed directly over the duct or cable being protected.

13.1.17 The counterpoise conductor is normally bonded to ground electrodes at 150 m to 300 m intervals. At runway or taxiway crossings or apron areas, the counterpoise wire is installed above the conduits and bonded to ground electrodes at each side of the crossing. In consideration of the risk in relation to historical lightning flash density for the site, the counterpoise conductor may be insulated and brought into the duct for pavement crossings.

13.1.18 In the case of in-pavement light fixtures in shallow bases where the AGL transformer is located at the side of the pavement, the site may choose to not continue the counterpoise system over the secondary leads. In such an instance, the extension from the counterpoise to the light base is an equipment ground and is installed by means of an insulated wire routed in the conduit or saw-cut and connected to the internal ground lug of the base. (Shown in Figure 13-22.)

13.1.19 The counterpoise wire is typically of solid copper in sizes from 10 mm^2 (#8 AWG) to 25 mm^2 (#4 AWG).

Ground jumper

13.1.20 Regardless of whether an LPS system or an equipment grounding system is installed, a flexible ground jumper of sufficient length is provided from the internal ground lug of the housing to the optical assembly (in-pavement lights) or cover plate (elevated lights). The jumper extends the equipment grounding for personnel safety should there be a fault and the optical assembly or cover plate be lifted free of the base. It is to be noted that since this ground jumper is internal and cannot be seen, to be certain that it is actually connected cannot be guaranteed and the electrician should always work with insulated gloves. (Ground jumpers are shown in Figure 13-20 and Figure 13-22.)

Secondary grounding

13.1.21 According to some local practices, a connection is made from the grounding system to one end of the secondary winding of the AGL transformer. This grounding reduces the voltage to which the electrician may be exposed upon occurrence of a primary to secondary short. Examples of secondary grounding are shown in Figure 13-2.

Earth resistance

13.1.22 An often accepted earth resistance value of 25 ohms for the LPS should not be interpreted as satisfactory for all installations. Reduced earth resistance values might be necessary to provide effective lightning protection where the lightning risk assessment is high. For equipment grounding, local electrical codes may define the earth resistance value, e.g. 6 ohms.

Initial considerations

13.1.23 Installation of electrical cables underground is expensive and measures to assure long and effective service with a minimum of maintenance should be used. All work should be done by experienced personnel regularly engaged in this type of work. Most underground cables will be located on, or very close to, the manoeuvring area of the aerodrome. Hence, at active aerodromes great care must be exercised to ensure that the installation does not present a hazard to aircraft or to the installers.

Preconstruction arrangements

13.1.24 Obtain prior approval from the “engineer in charge” for the materials, workmen, time of day or night for the work, method and procedures for the installation, and procedures for any temporary or permanent repairs to be made. Arrange for coordinating the effort with air traffic control if necessary. Carefully determine and mark the route for the cables. Take all reasonable precautions to protect existing underground utilities such as fuel tanks, water lines, buried control and power cables, etc. All known utilities and power and control cables leading to and from any operating facility should be marked in the field before any work in the general vicinity is started. Thereafter and throughout the entire duration of construction, other underground facilities should be protected from possible damage. Any underground cables which are damaged during installation should be immediately repaired with equal quality material.

13.1.25 Tape the ends of the cables to prevent the entry of moisture until connections are made.

13.1.26 Splices in ducts, conduits, or in the primary cables between light base and transformer housings should not be permitted.

Methods of installation

13.1.27 There are two methods of installing underground electrical cables: by direct burial, and by installation in conduit (direct-buried conduit or enclosed duct, i.e. duct bank). Elements of these methods are examined hereafter.

13.2 DIRECT BURIAL OF CABLES

13.2.1 The major steps of installing electrical cables by direct burial are:

a) trenching;

b) sand bedding;

c) placement of cables;

d) first backfilling with sand;
e) placement of the counterpoise wire; and

f) second backfill with common soil (the second backfill may be in two parts to allow placement of a warning tape).

Trenching

13.2.2 *Basic requirements.* Unless required otherwise, all cables in the same location and running in the same general direction should be installed in the same trench. Walls of trenches should be essentially vertical so that a minimum of shoulder surface is disturbed. The bottom surface of trenches should be essentially smooth and free from coarse aggregate. If possible, trenches should be opened only to the extent that cables can be installed and the trench closed in the same working day. Where turf is well established and the sod can be removed, it should be carefully stripped and properly stored.

13.2.3 Duct bank or conduit markers temporarily removed for trench excavations should be replaced as required. Where existing active cable(s) cross proposed installations, the installer should ensure that these cable(s) are adequately protected. Where crossings are unavoidable, no splices will be allowed in the existing cables, except as specified on the plans. Existing cables should be located manually. Unearthed cables should be inspected to assure no damage has occurred.

13.2.4 *Cable depth.* Direct-buried cables should be a minimum of 450 mm below the finished grade when on the aerodrome property, 750 mm below the finished grade when off the aerodrome property and at a minimum of 1 000 mm for under runways, taxiways, aprons. and roads. When installed off the aerodrome property, the cable may need to be installed at a greater depth, in accordance with local electrical code requirements. For example, the minimum cable depth when crossing under a railroad track, should be 1 200 mm unless otherwise specified.

13.2.5 *Trench depth.* The depth of the trench into which cables are to be installed should be sufficient for the required cable depth plus a minimum 75 mm bedding (e.g. sand) layer below the level of the lowest cable as shown in Figure 13-4.

Placement of cables

13.2.6 Wherever possible, cable should be run in one piece, without splices, from light station to light station. Use the longest practicable lengths of feeder cable in order to minimize splicing requirements. When cable cutting is required, cable ends should be effectively sealed against moisture immediately after cutting. Cables should not be bent at a radius of less than eight times the diameter for rubber or plastic covered cable and twelve times the diameter for metallic armoured cable. Cable that has been kinked should not be installed. Someone should be stationed at the reel to observe and report any irregularities in the cable when the cable is being unreeled. Cable for direct earth burial should be unreeled in place in the open trench or unreeled by the side of the trench and carefully placed in the trench bottom. The cable(s) should not be unreeled and pulled into the trench from one end. Where cables must cross over each other, a minimum of 75 mm vertical displacement should be provided with the topmost cable depth at or below the minimum required depth below finished grade. Slack cable sufficient to provide strain relief should be placed in the trench in a series of S curves.

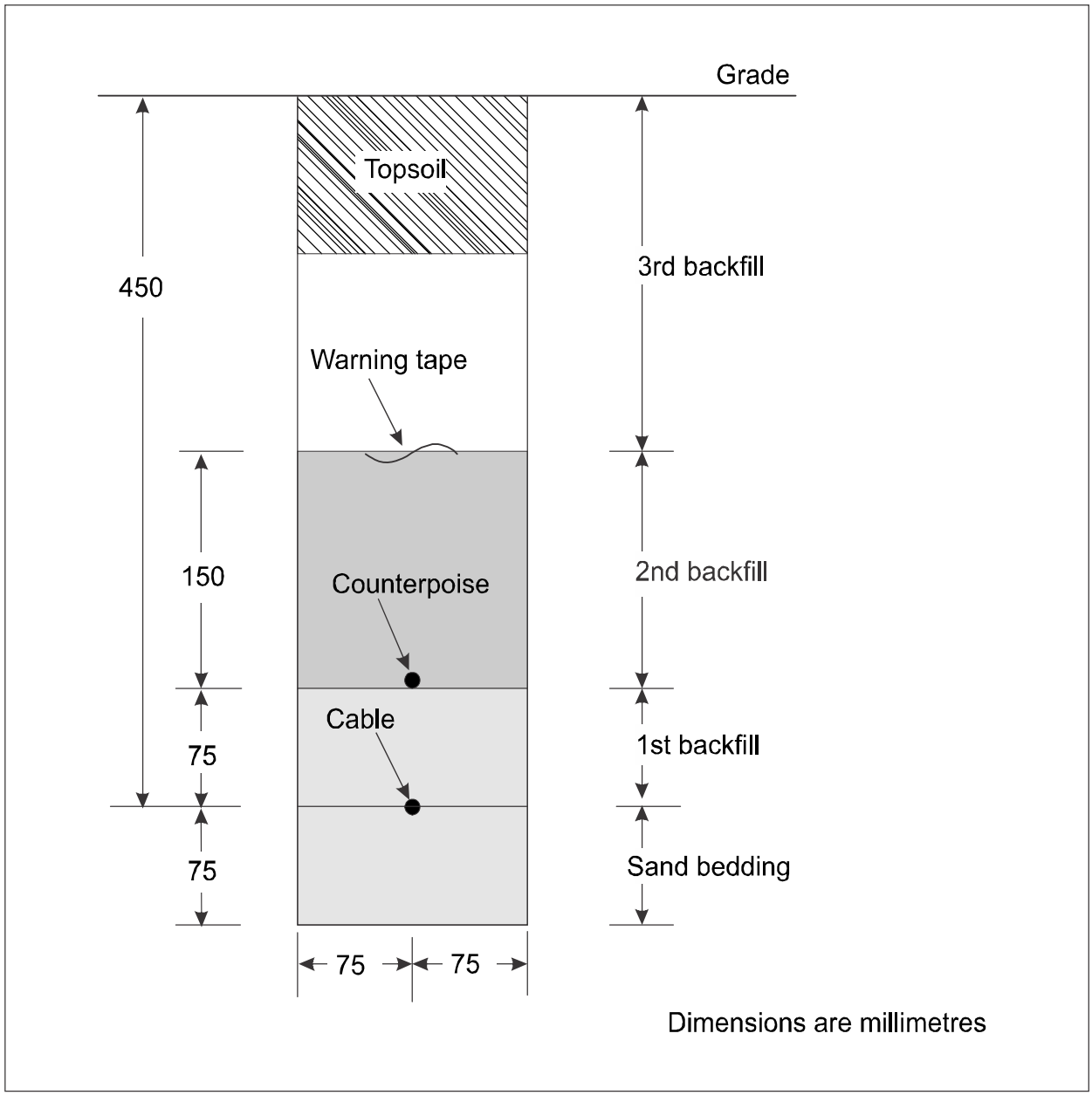

Figure 13-4. Direct burial of cable in trench

Placement of the counterpoise wire

13.2.7 The counterpoise wire provides a 90 degree "zone of protection" (45 degrees on each side of the vertical). The counterpoise wire is installed continuously 75 mm to 150 mm above the cable, conduit or duct bank, or as shown on the plans if greater. Based upon the zone of protection, a counterpoise at 75 mm is suitable for 1 to 2 cables and at 150 mm for 3 to 4 cables after which additional counterpoise wires are required, as shown in Figure 13-5.

13.2.8 Additionally, counterpoise wire should be installed at least 200 mm below the top of the subgrade in paved areas or 250 mm below finished grade in unpaved areas. This dimension may be less than 100 mm where conduit is to be embedded in existing pavement. Counterpoise wire should not be installed in conduit except for runway or taxiway crossings where the counterpoise may be installed within an existing duct. When installed in a duct, the counterpoise should be insulated.

Warning tape

13.2.9 Underground electrical warning (caution) tape should be installed in the trench and located 150 mm above the direct-buried cable or the counterpoise wire, if present, or approximately half way between the surface and upper level of direct-buried cables or counterpoise wire, if present, and 200 mm minimum below finished grade. The tape should be a 100 mm to 150 mm wide polyethylene film tape with a metalized foil core for remote detection. It should have a colour and continuous legend as indicated on the plans.

Heavy traffic areas

13.2.10 Cables should not be direct buried under paved areas, roadways, railroad tracks, or ditches. In these areas, the cable should be installed in concrete-encased ducts or in rigid steel conduits.

Areas of rock

13.2.11 When solid rock is encountered and cannot be avoided, the rock should be excavated, the cables put in tubing or duct, and backfilled with concrete. As shown in Figure 13-6, the tubing should be not less than 150 mm below the surface and 75 mm above the bottom of the excavation. The counterpoise is installed above the duct. A nylon pull rope may be included in the duct. Consideration should be given to use of a two-layer application with the top layer being conductive concrete.

Trench width and separation between cables

13.2.12 Trench width for a single cable should be not less than 150 mm. Where more than one cable is located in a trench, the trench width is adjusted so that the separations given below can be maintained (Figure 13-7).

13.2.13 Horizontal separation between cables:

a) Series lighting cables of different series lighting circuits should have a lateral separation of 75 mm. Series lighting cables of the same circuit may be placed without separation.

b) Power cables of the same or different circuits of less than 600 volts may be laid together in the same trench without horizontal separation.

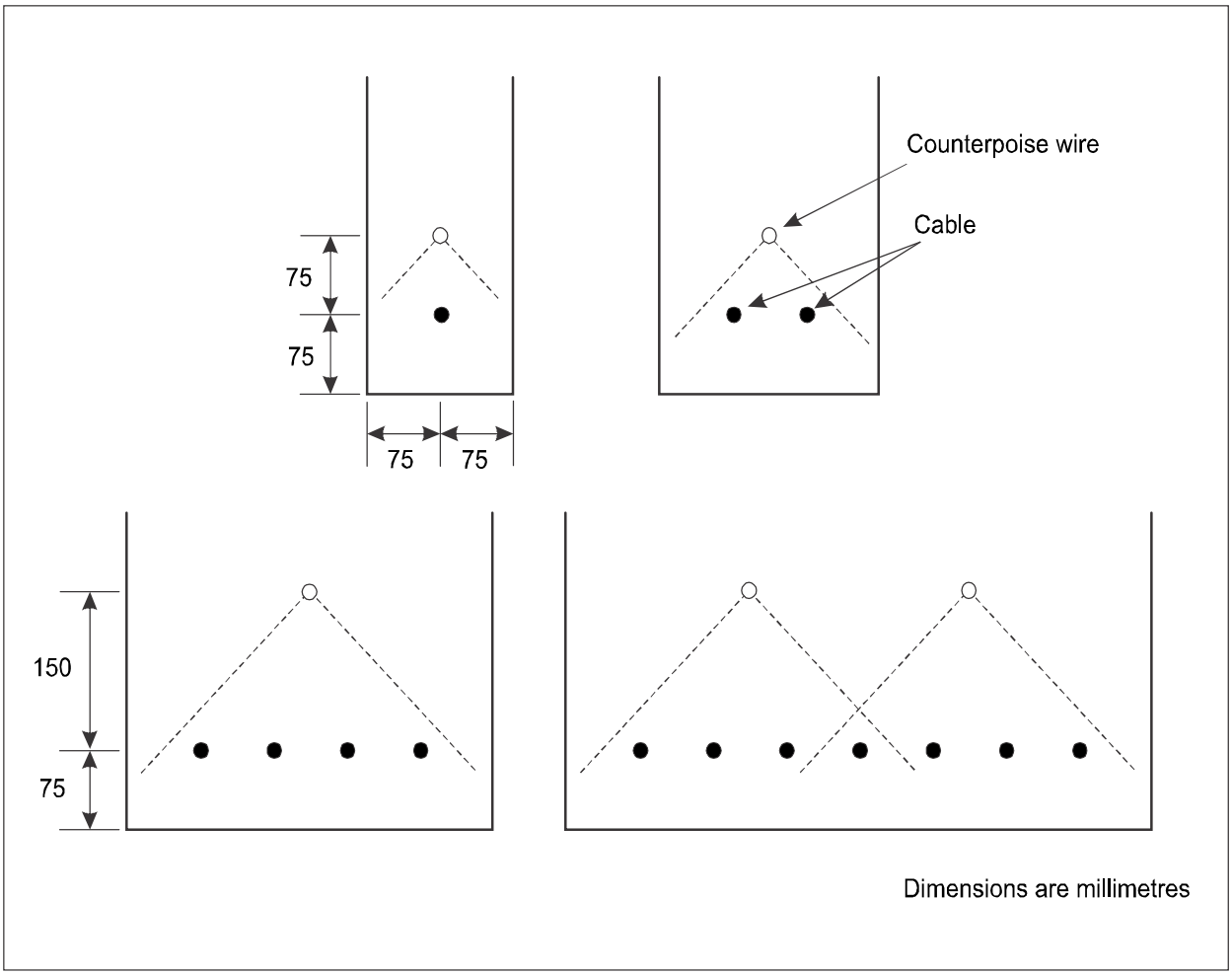

Figure 13-5. Placement of counterpoise wires

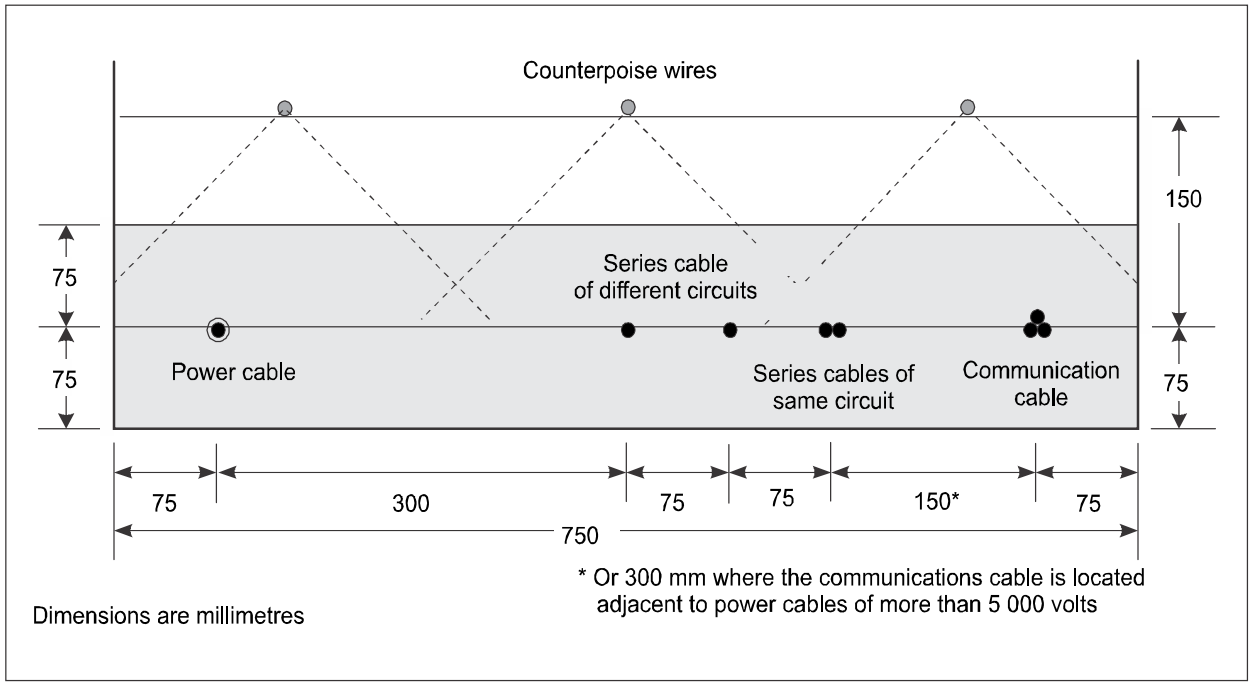

Figure 13-6. Installation in rock area

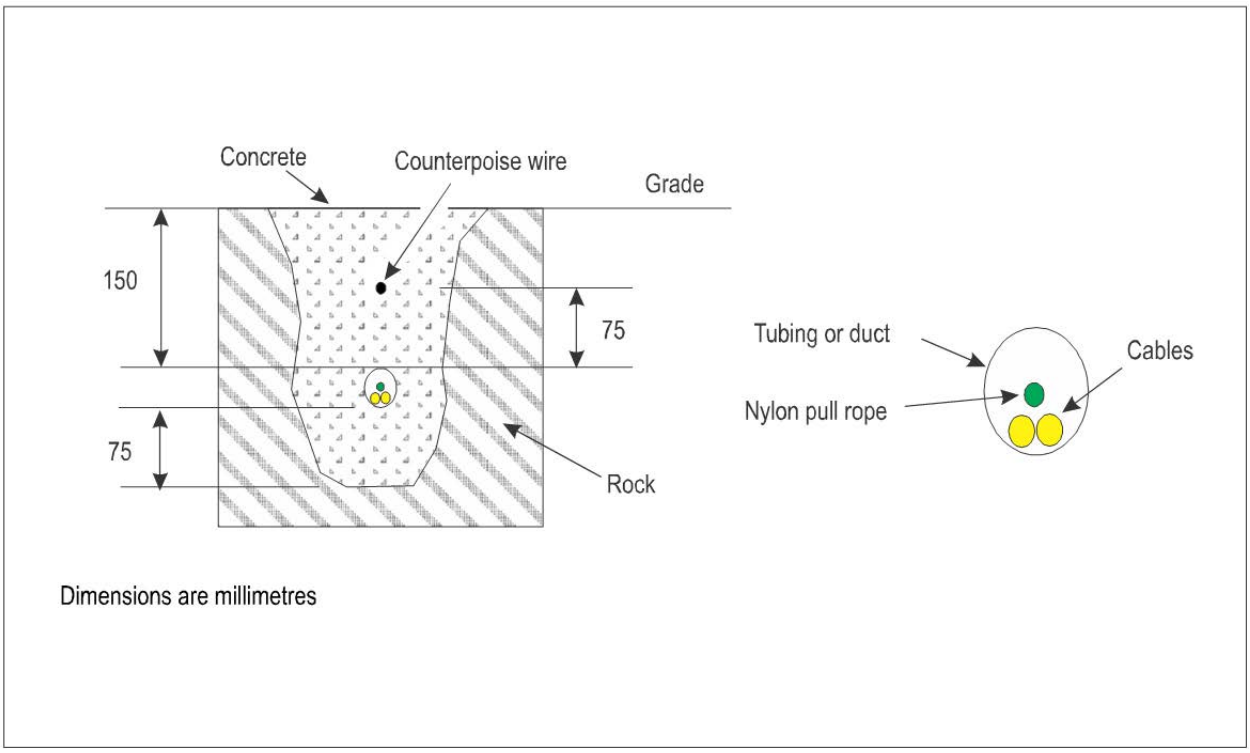

Figure 13-7. Cable/counterpoise lateral spacing

c) Power cables of different circuits with voltages between 600 and 5 000 volts should be separated by a minimum of 100 mm.

d) All power cables, 5 000 volts and below, should be separated from all control, telephone, and coaxial type cables by a minimum of 150 mm.

e) Power cables of more than 5 000 volts should be separated from all other cables by a minimum of 300 mm.

f) Control, telephone and coaxial cables may be laid in the trench without horizontal separation from each other.

13.2.14 Vertical separation between cables:

a) No cable should directly overlap another cable because compacting may damage the cable.

b) Vertical separation between cables should be similar to those given for horizontal separation except that cables which do not require horizontal separation should be separated vertically by a minimum of 60 mm.

c) Ground wires and counterpoises should be approximately 150 mm above the uppermost level of the cables.

Crossovers

13.2.15 Although vertical separations are indicated above, it is not suggested that there be a layering of direct-buried cables within a trench. Such layering may render future repair of lower cables difficult. For the most part, vertical separations are intended for instances where cables crossover another at an angle. It is preferable that such crossovers occur as close to 90 degrees as possible. The trench depth is increased as shown in Figure 13-8 to enable the vertical separation.

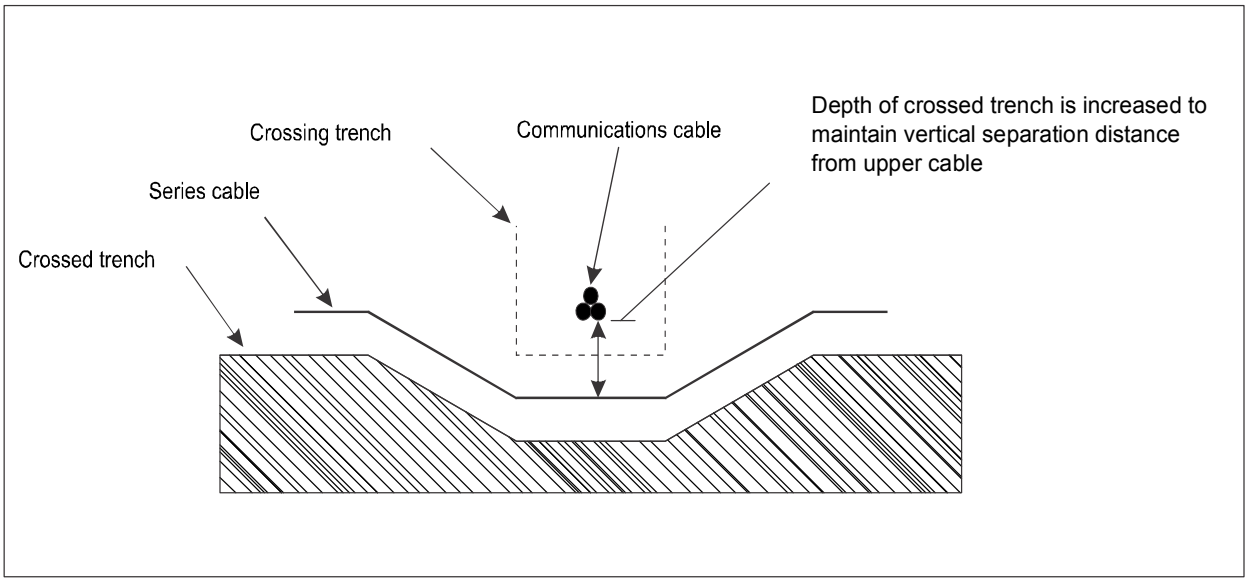

Figure 13-8. Crossover of cables

Counterpoise interconnections

13.2.16 The counterpoise conductors should be interconnected where cables or conduits cross. Where a number of counterpoise wires are installed over cables, conduits or ducts, they should be interconnected at intervals of not more than 150 m. Figure 13-9 illustrates a means of interconnection between counterpoise wires.

13.2.17 Bonding of counterpoise wires for interconnects between counterpoise wires and to ground electrodes should be by exothermic welding. Only personnel experienced in and regularly engaged in this type of work should make these connections. The installations should comply with the manufacturer's recommendations and the following:

a) All slag should be removed from welds.

b) For welds at light fixture base cans, all galvanized coated surface areas and "melt" areas, both inside and outside of base cans, damaged by exothermic bond processes should be restored by coating the areas with a liquid cold-galvanizing compound. Surfaces to be coated should be prepared and the compound applied in accordance with the manufacturer's recommendations.

c) All buried copper and weld material at weld connections should be thoroughly coated with coal tar bitumastic material or equivalent means to prevent surface exposure to corrosive soil or moisture.

13.2.18 Alternatively, connection of the counterpoise wire to light bases and anchor stakes may be by means of bolted lugs approved for this purpose.

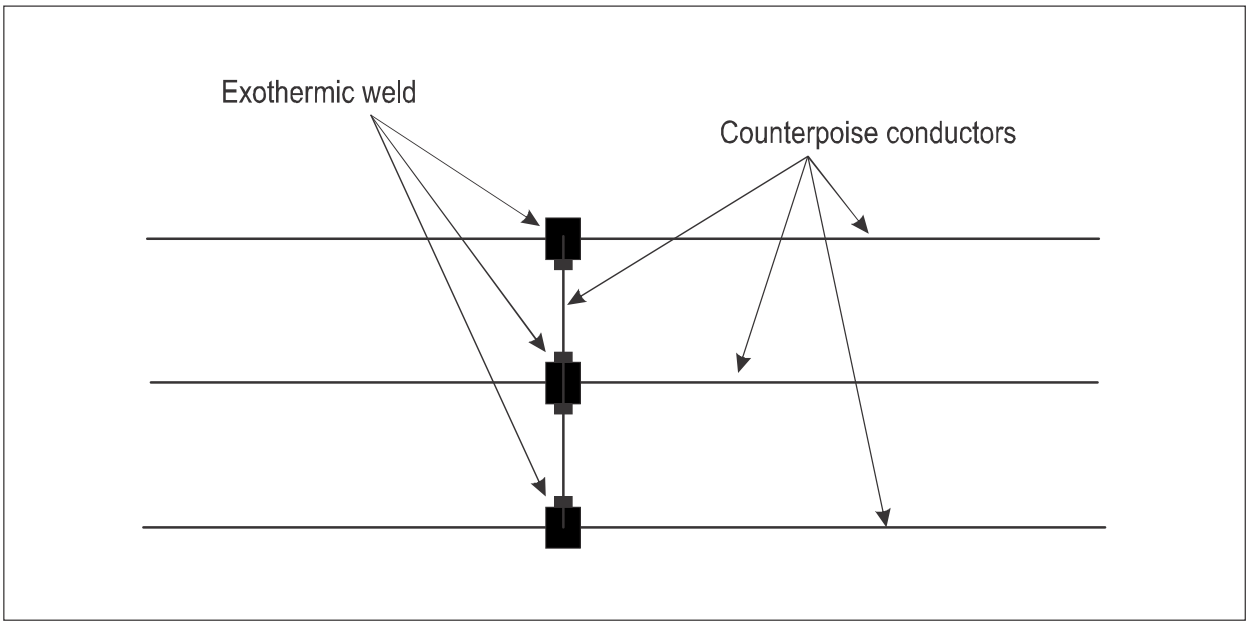

Figure 13-9. Counterpoise interconnections

Slack cable

13.2.19 Slack cable of approximately 1 m length should be left on each end of cable runs, on each side of all connections, isolating transformers, light units, and at all points where cable connections are brought above ground. The slack loop should be installed at the same minimum depth as the cable run. Loops should have bends with an inner radius not less than twelve times the outside diameter of the cable. Where cable is brought above ground, additional slack should be left above ground. At all cable splices, provide slack loops free of bends at the splice or within 300 mm of the ends of the splice. Where provisions must be made for testing or for future above-grade connections, provide enough slack to allow the cable to be extended at least 300 mm vertically above the top of the access structure. This requirement also applies where primary cable passes through empty base cans, junctions and access structures to allow for future connections, or as designated.

Final backfilling

13.2.20 After the cable has been installed, the trench should be backfilled as follows:

a) Trenches should not contain pools of water during backfilling operations.

b) Backfill separating cables should be firmly tamped in place. The cable separations should be maintained and may be horizontal, vertical or a combination of the two.

c) The first layer of backfilling should be not less than 75 mm deep, loose measurement, and should be either earth or sand containing no material aggregate particles larger than 8 mm diameter. This layer should not be compacted, except for tamping to maintain separation of cables. The counterpoise wires are laid on top of this layer.

d) The second layer should be not less than 120 mm deep, of loose measurement, and should contain no particles larger than 25 mm diameter. The warning tape may be laid on top of this layer.

e) The second and subsequent layers should be thoroughly tamped and compacted to at least the density of the adjacent undisturbed soil. If necessary to obtain the desired compaction, the backfill material may be moistened or aerated as required.

f) The third and subsequent layers of backfill should not exceed 200 mm and may be of excavated or imported material and should not contain stones or aggregate larger than 100 mm in diameter.

g) The trench should be completely backfilled and tamped level with the adjacent surface, except that when turf is to be established over the trench, the backfilling should be stopped at an appropriate depth consistent with the type of turfing operation to be accommodated. A proper allowance for settlement should also be provided. Any excess excavated material should be removed and disposed of in accordance with the plans and specifications.

h) *Restoration*. Where sod has been removed it should be replaced as soon as possible after the backfilling is completed. All areas disturbed by the trenching, storing of dirt, cable laying, pad construction and other work should be restored to its original condition. The restoration should include any necessary topsoiling, fertilizing, liming, seeding, sodding, sprigging or mulching. If trenching cuts are made through paved areas, the cuts, after proper backfilling, should be resurfaced with paving similar to the original paving. Resurfaced cuts should be level with the original paving, free from cracks and capable of withstanding traffic loads imposed without settling or cracking.

Electromagnetic interference

13.2.21 Airfield lighting circuits can generate excessive electromagnetic interference (EMI) that can degrade the performance of some of the airport's critical air navigational systems, such as RVR equipment, glide slopes, localizers, etc. Some CCRs are likely sources of EMI due to their inherent operating characteristics. The following cautionary steps may help decrease EMI and/or its adverse effects in the airport environment:

a) Do not install cables for airfield lighting circuits in the same conduit, cable duct, or duct bank as control and communications cables.

b) Do not install cables for airfield lighting systems so that they cross control and/or communications cables.

c) In some cases, harmonic filters can be installed at the regulator output to reduce EMI emissions. These filters are available from some regulator manufacturers.

d) Ground spare control and communication cables.

e) Notify manufacturers, designers, engineers, etc. about existing navigational equipment and the potential for interference.

f) Require electromagnetic compatibility between new equipment and existing equipment in project contracts. Operational acceptance tests may be required to verify compliance.

Cable plowing

13.2.22 Under certain conditions, it may be possible to install cables by cable plowing. This type of installation method should only be specified where sandy soils are prevalent and with no rocks or other debris that would nick or cut the cable insulation. The equipment is such that cables are placed at a minimum depth of 450 mm below the finished grade on aerodrome property. The cable should be manually unreeled off the spool as the machine travels such that it is not the slope of the earth that is causing the cable to unreel from the spool. Under certain conditions, it may also be possible to install flexible duct or polyethylene tubing by plowing.

Splicing

13.2.23 Connections of the type shown on the plans should be made by experienced personnel regularly engaged in this type of work and should be made as follows:

a) *Cast splices.* These should be made by using crimp connectors for jointing conductors. Molds should be assembled and the compound should be mixed and poured in accordance with the manufacturer's instructions and to the satisfaction of the engineer.

b) *Field-attached plug-in splices.* These should be assembled in accordance with the manufacturer's instructions. These splices should be made by plugging directly into mating connectors. In all cases, the joint where the connectors come together should be wrapped with at least one layer of rubber or synthetic rubber tape and one layer of plastic tape, one-half lapped, extending at least 37 mm on each side of the joint.

c) *Factory-molded plug-in splices.* These should be made by plugging directly into mating connectors. In all cases, the joint where the connectors come together should be wrapped with at least one layer of rubber or synthetic rubber tape and one layer of plastic tape, one-half lapped, extending at least 37 mm on each side of the joint.

d) *Taped or heat-shrink splices.* Application of taped splices is examined in Chapter 14.

13.3 INSTALLATION OF DUCTS/CONDUITS (WITH OR WITHOUT CONCRETE ENCASEMENT)

Selection of routes

13.3.1 Duct-line routes should be selected to balance maximum flexibility with minimum cost and to avoid foundations for future buildings and other structures. Where it may be necessary to run communication lines along with electric power distribution lines, two isolated systems in separate manhole compartments should be provided. Where possible, ducts should be installed in the same concrete envelope. Electric and communication ducts should be kept clear of all other underground utilities, especially high temperature water or steam pipes.

Duct materials

13.3.2 Acceptable standard materials for ducts include fiber, tile, and plastic. Plastic ducts and conduits should be made of polyethylene because it is free of halogens and thus more environmentally suitable. Rigid steel conduits may also be installed below grade and should be provided with field or factory applied coatings where required.

Size of ducts

13.3.3 The size of conduits in a duct bank should be not less than a 10 cm inside diameter except that ducts for communication lines with a minimum diameter of 7.5 cm are acceptable.

Installation of ducts without concrete encasement

13.3.4 Trenches for single-duct lines should be not less than 150 mm or more than 300 mm wide, and the trench for two or more ducts installed at the same level should be proportionately wider. Trench bottoms for ducts without concrete encasement should be made to conform accurately to grade so as to provide uniform support for the duct along its entire length. A layer of fine earth material at least 75 mm thick (loose measurement) should be placed in the bottom of the trench as bedding for the duct. The bedding material should consist of soft dirt, sand, or other fine fill, and it should contain no particles larger than 6 mm diameter. The bedding material should be tamped until firm. When two or more ducts are installed in the same trench without concrete encasement, they should be spaced not less than 75 mm apart (measured from outside wall to outside wall) in a horizontal direction or not less than 75 mm apart in a vertical direction. Rigid steel and heavy-wall conduit may be direct-earth buried. All other conduits should be encased (Figure 13-10).

Installation of ducts encased in concrete

13.3.5 All ducts installed in concrete encasement should be placed on a layer of concrete not less than 75 mm thick. Where two or more ducts are encased in concrete they should be spaced not less than 75 mm (measured from outside wall to outside wall). As the duct laying progresses, concrete not less than 75 mm thick should be placed around

the sides and top of the duct bank. Flared ends of ducts or couplings should be installed flush with the concrete encasement or inside walls of manholes or handholes. Interlock spacers should be used at not more than 1.5 m spacing to ensure uniform spacing between ducts. Joints in adjacent ducts should be staggered a minimum of 600 mm apart and should be made waterproof prior to concreting. No duct having a defective joint should be installed. Concrete-encased duct or rigid steel conduit should be installed so that the top of the concrete envelope or conduit is not less than 450 mm below the stabilized base course where it is installed under roadways, railroads, runways, taxiways, other paved areas and ditches, and not less than 450 mm below the finished grade elsewhere. Counterpoise wires are provided as required.

Ducts and flexible tubing

13.3.6 When installing cables in a duct system, the cables should be grouped as shown in Figure 13-11. Flexible duct (tubing) is directly placed in the trench as shown in Figure 13-10.

Grounding bushings

13.3.7 Where a rigid steel conduit enters or leaves a manhole or handhole, a grounding bushing should be provided for all conduits.

Arrangement of duct banks

13.3.8 An arrangement of two ducts wide or high should be used for best heat dissipation. Correspondingly, the duct banks may be several ducts high or wide. (This may be impossible where a large number of ducts are involved.) The vertical two conduit-wide arrangement enables the cables to be more easily racked on manhole walls, but may not be as economical as the horizontal two conduit-high arrangement.

13.3.9 *Drainage*. All duct lines should be laid so as to slope toward handholes, manholes and duct ends for drainage. Grades should be at least 2.5 mm per metre. Where it is not practicable to maintain the slope all one way, the duct lines may be sloped from the centre in both directions toward manholes, handholes, or duct ends. Pockets or traps where moisture may accumulate should be avoided.

Pull wire

13.3.10 Each spare duct installed should be provided with a copper-clad steel pull wire of not less than 5 mm^2 in area. Alternatively, a polypropylene pull rope which will not rot or support mould in the wet duct/base can/manholes may be used. The open ends of the spare ducts should be plugged with removable tapered plugs. The plug should secure the pull wire firmly.

Spare capacity

13.3.11 Sufficient ducts for planned installations, future expansion, plus a minimum of 25 per cent of spare ducts, should be included for all new underground systems.

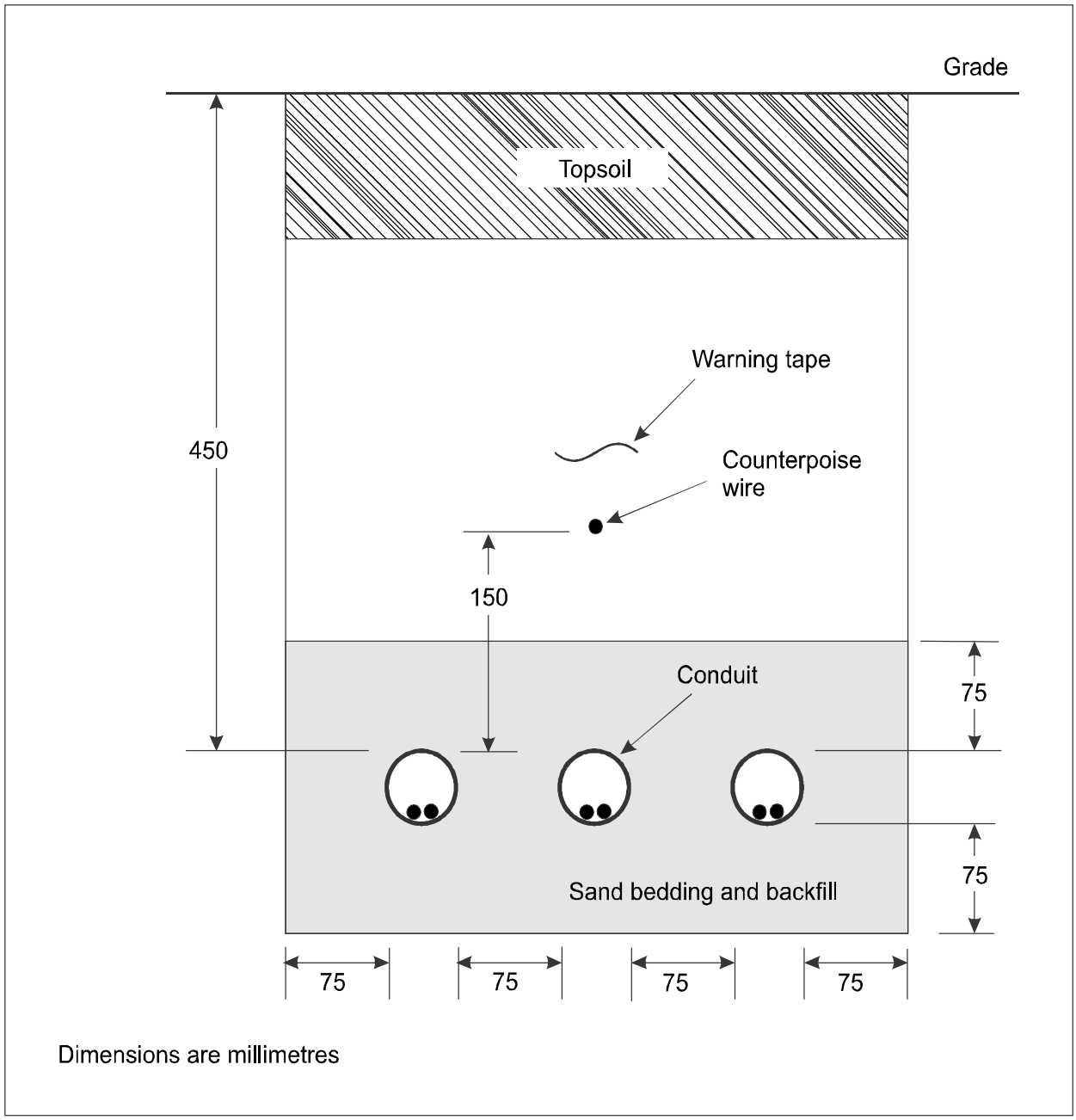

Figure 13-10. Duct/conduit without concrete encasement

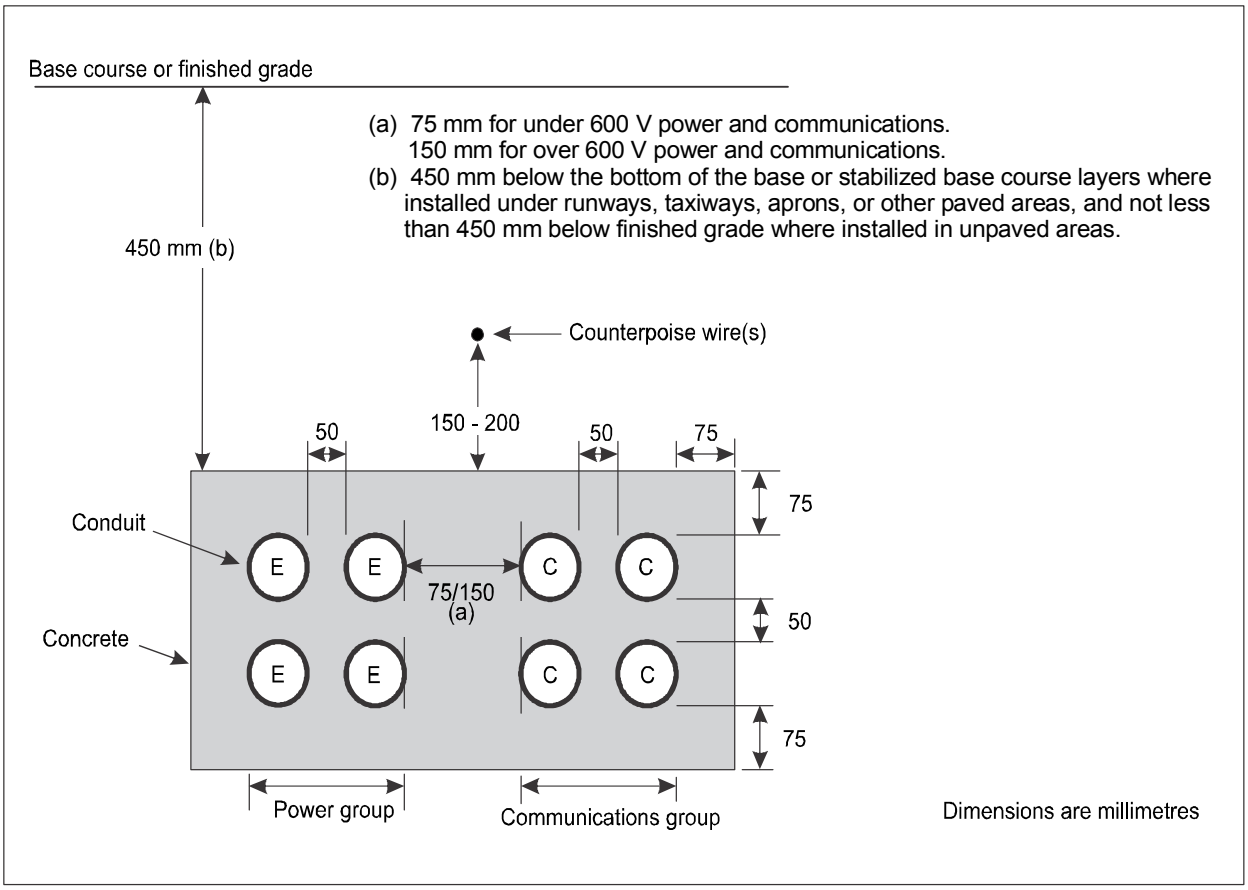

Figure 13-11. Concrete encased duct bank

Flexible tubing

13.3.12 Use of flexible tubing should be limited to direct burial and short cable runs. Rigid conduits should be used for concrete encased duct banks because it is difficult to avoid displacement of flexible tubing during the concrete pouring or general backfilling stage. In addition, flexible tubing can be problematic for cable pulling because the pull wire may cut into the relatively soft sides of the tubing. A suitable pulling compound should be used.

Counterpoise installation above multiple conduits and duct banks

13.3.13 Counterpoise wires may be installed above multiple conduits/duct banks for airfield lighting cables with the intent being to provide a complete cone of protection over the airfield lighting cables against lightning. Protection of duct banks is to be defined in coordination with general EMC study of ground characteristics and Keraunic levels at the site (0 refers). When multiple conduits and/or duct banks for airfield cables are installed in the same trench, the number and location of counterpoise wires above the conduits should be adequate to provide a complete zone of protection measured 45 degrees each side of the vertical (Figure 13-12).

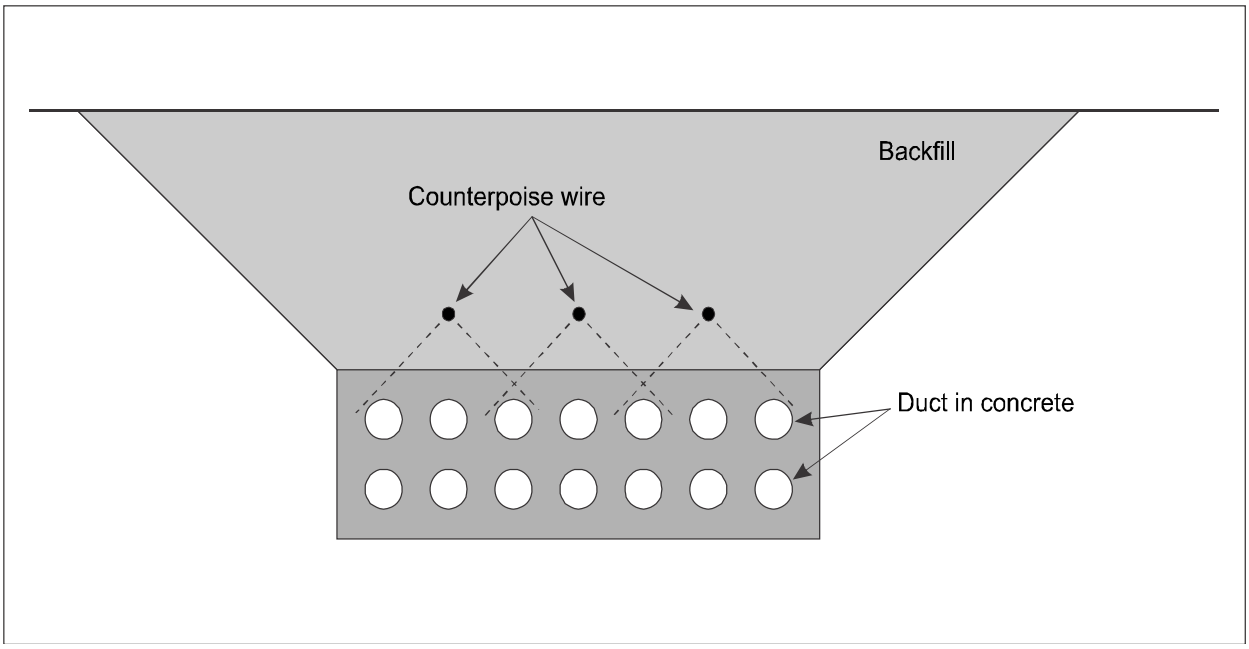

Figure 13-12. Counterpoise above multiple ducts

Secondary lead protection

13.3.14 Normally, the secondary lead is routed through the breakable fitting. Where otherwise the secondary lead is exposed, it may be protected by means of a flexible cable sheath from the housing or buried AGL transformer to the light unit.

13.4 MANHOLES AND HANDHOLES

13.4.1 Factors bearing on the choice of manholes, as illustrated in Figure 13-13, and handholes are number, direction, and location of duct runs; cable rack arrangements; method of drainage; adequacy of work space (especially if equipment is to be installed in the manhole) and the size of the opening required to install and remove equipment.

Location

13.4.2 Manholes or handholes should be placed where required for connections or splices and where conflict with other utilities will be avoided. Manhole separation should not exceed 200 m on straight runs and 100 m on curved duct runs. Spacing should be decreased where necessary to prevent installation damage during pulling of cables. Strain should be limited during installation to a point that will not damage cable insulation or deform the cable (see Table 13-1).

Stubs

13.4.3 It is good practice to provide a set of two or more spare stubs (short lengths of ducts leading out from the manhole) so that the manhole wall need not be disturbed when a future extension is made. The stubs should be plugged on both ends.

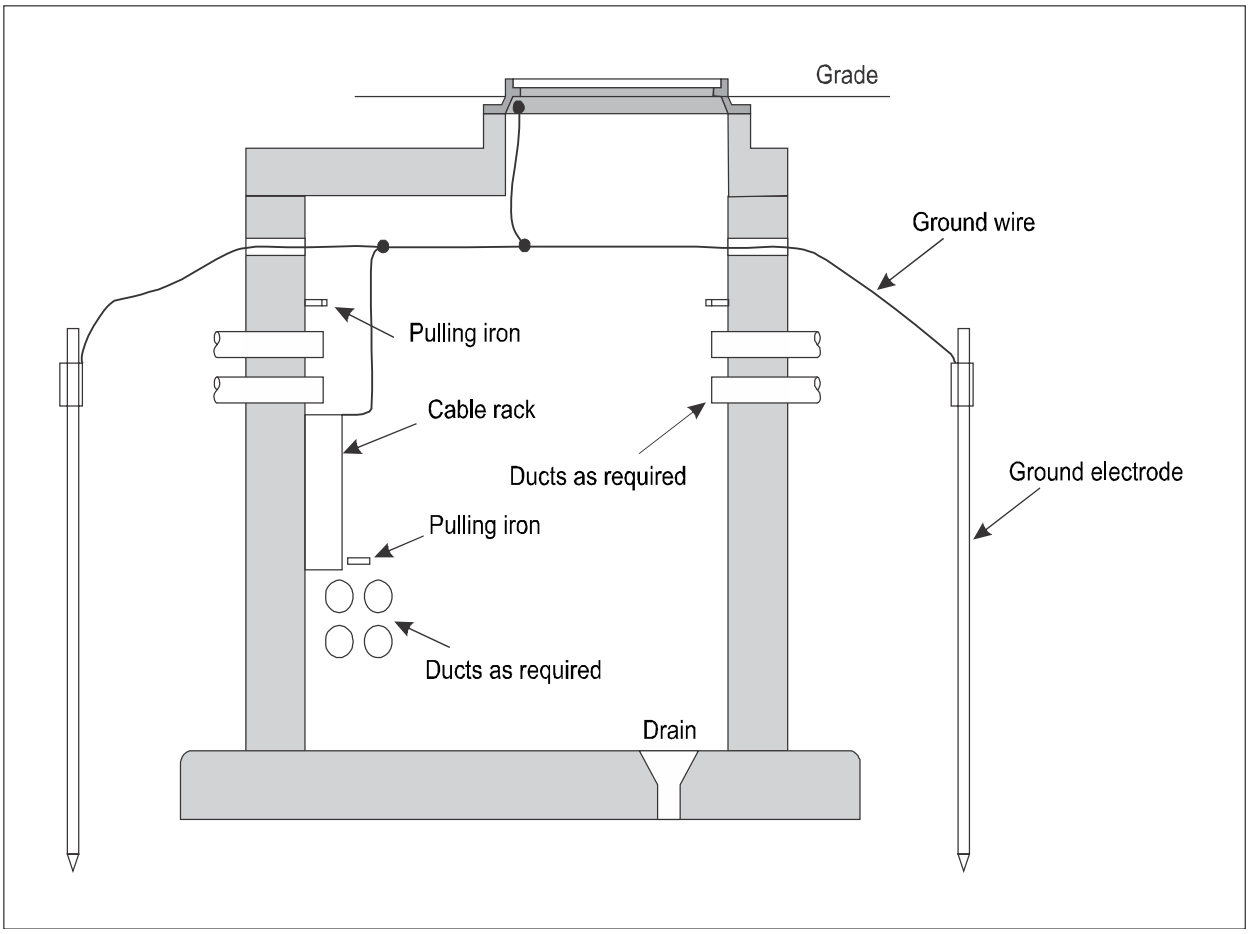

Figure 13-13. Manhole

Hardware

13.4.4 Hardware applicable to the installation should be chosen. Where flared ends of ducts are provided, cable-duct shields are necessary only for protection of metallic-sheathed cables.

Pulling irons

13.4.5 Pulling irons, also referred to as "draw irons", are loops or formed bars inset in the walls of the manhole to serve as an anchor point for the pulling in of cable. The pulling irons should be of a strength to withstand twice the expected load that may be applied.

Two-section manholes

13.4.6 Two-section manholes should be used to maintain separation of the circuits where electric power and communication lines are installed in the same duct or use the same manhole.

Grounding

13.4.7 The manhole is provided with grounding for all metal parts such as the cable rack and entrance cover connected to an exterior ground electrode. Four interconnected ground electrodes (one at each corner) may be installed around the manhole in accordance with local codes.

13.5 INSTALLATION OF UNDERGROUND CABLES IN DUCTS

Preparation of ducts

13.5.1 After the duct installation is completed, the cables are installed by drawing or pulling into the ducts. The duct should be open, continuous, and clear of debris before the cables are installed. The cable should be installed in a manner to prevent harmful stretching of the conductor, injury to the insulation, or damage to the outer protective covering. The ends of all cables should be sealed with moisture-seal tape before installing and they should be kept sealed until connections are made. Where more than one cable is to be installed in a duct or conduit, all cable should be installed at the same time. In no case should a splice or connection be placed in a duct or conduit.

Cable pulling in ducts

13.5.2 *Method of pulling.* The cables to be installed in the duct should be pulled by a power winch or by hand. An adequate amount of cable pulling compound should be used on all pulls. Petroleum grease should not be used. The surface of any cable sheath or jacket should not be damaged to a depth greater than 1/10th its original thickness. The cable should not be flattened out of round more than 1/10th its outside diameter. Maximum pulling tensions for commonly installed cables are listed in Table 13-1. The limitations listed in this table are not intended to preclude the use of steel or wire rope as a means of pulling. However, unless a dynamometer is used to indicate the proper tension for the cable being pulled, a harness of the proper size rope that will limit tension of the pull to forces indicated in Table 13-1 should be used. Any combination of a group of cables to be pulled into a duct should not exceed the sum of individual allowable tension of each cable plus 15 per cent.

Table 13-1. Maximum allowable non-armoured cable pull using dynamometer or rope

Cable	*Tension (kg)*	*Rope diameter (mm)*			
2 – 1c 8.4mm^2 Sol	125	4.8 C			
3 – 1c 8.4mm^2 Sol	165	6.4 C	4.8 M		
4 – 1c 8.4mm^2 Sol	250		6.4 M		
2 – 1c 13.3 mm^2 Str	190	6.4 C	4.8 M		
3 – 1c 13.3 mm^2 Str	285	8.0 C	6.4 M		
4 – 1c 13.3 mm^2 Str	380	9.6 C		4.8 D	
1 – 2c 8.4 mm^2 Str	140	6.4 C			

Cable	*Tension (kg)*	*Rope diameter (mm)*			
1 – 3c 8.4 mm^2 Str	180	6.4 C			
1 – 4c 8.4 mm^2 Str	265		6.4 M		
1 – 2c 13.3 mm^2 Str	220	6.4 C	4.8 M		
1 – 3c 13.3 mm^2 Str	310	8.0 C			
1 – 4c 13.3 mm^2 Str	400	9.6 C	8.0 M	4.8 D	
1 – 6c 3.3 mm^2 Str	140	6.4 C			
1 – 12c 3.3 mm^2 Str	285	8.0 C	6.4 M		
1 – 12PR 0.6mm^2	105	4.8 C			
1 – 25PR 0.6mm^2	245		6.4 M		
1 – 50PR 0.6mm^2	480	11.5 C			4.8 N
1 – 100PR 0.6 mm^2			12.0 M	8.0 D	

c – Conductor Sol – Solid Str – Stranded PR – Pair
C – Cotton M – Manila D – Dacron N – Nylon

Note.— Maximum pulling tensions for cables not listed should be obtained from the manufacturer of the cable.

13.5.3 *Length of pull.* To minimize splicing, the longest practicable lengths of cable should be pulled into the ducts at one time. Unless otherwise required, manholes and handholes should be as far apart as practicable for the type of cable being installed but under no condition should the distance between manholes or handholes exceed 200 metres.

Installation of cables in manholes and handholes

13.5.4 *Cable racks.* Cables should be carefully formed around the interior of manholes or handholes avoiding sharp bends or kinks. All splices and cables should be tied to cable racks using 3.2 mm diameter nylon line. Manhole and handhole racks should be the plastic type or provided with porcelain insulators. Splices or connectors should be a minimum of 0.6 m from the mouth of the duct opening into the manhole or handhole. Where feasible, splices in different cables should be staggered.

13.5.5 *Cable terminations.* Termination of all control, telephone, and coaxial cables should be as required. Termination of all power cables rated above 5 000 volts should be made with a stress relief device. Where potheads are used, strict conformance to the manufacturer's recommendations should be followed. Where terminations are made at transformer bushings, exposed conducting surfaces on both high- and low-voltage sides should be taped for full voltage and painted with a high insulation water-resistant coating.

13.5.6 *Cable grounding.* The following conditions apply to the grounding of cables.

a) All shielded power cables should have the shield grounded at each end. The grounding conductor should be connected to a ground rod by means of a grounding connector specifically designed for this purpose. The shields or armour on direct earth-buried power cables should be grounded on each end, but not at the splices.

b) All shielded control cables should have the shield grounded at each end. The shield at each splice should have insulation resistance from the ground equal to that of the original cable.

c) Telephone cables should have the shields grounded at one end only. The shield at each splice should have insulation resistance from the ground equal to that of the original cable.

d) Coaxial cable shields should be insulated from the ground throughout the length of the cable run. The shields should be grounded only at the coaxial connector terminating into the equipment on each end of the cable run.

Grouping of cables

13.5.7 The following are applicable to the installation of two or more cables in the same duct:

a) power cables of the same voltage may be installed in the same duct;

b) power cables of less than 600 volts may be installed in the same duct;

c) power cables of less than 600 volts should not be installed in the same duct with control, telephone, or coaxial type cables;

d) power cables of more than 600 volts should not be installed in the same duct with control. telephone, coaxial or power cables of less than 600 volts;

e) control, telephone, and coaxial cables may be installed in the same duct; and

f) power, control, and telephone cables may be installed in the same duct system, subject to provisions of 013.5.9.

13.5.8 The following are also applicable:

a) cables of different class of voltages should not be installed in the same duct;

b) cables of different areas, as for example that of runway side and taxiway side, should also not be mixed in the same duct; and

c) interleaved circuits are generally installed in the same duct and may be necessitated for common routing in the deep base systems.

13.5.9 The following are applicable to cable installation in manholes or handholes:

a) power and control cables should be installed in separate manholes and handholes unless required otherwise. If space is available, cable slack sufficient for one splice for each cable should be left in each manhole; and

b) when it is not possible to install power and other type cables in separate manholes or handholes, they should be installed in separate compartments or on opposite sides of the manhole or handhole.

Cable installation in saw cuts (secondary wiring)

13.5.10 Use of saw cuts:

a) When new lights are installed in existing pavements, for example, runway centre line and touchdown zone lights and taxiway centre line lights, cable installation in saw cuts or kerfs may be required. Only secondary circuits of isolating transformers should be installed in saw cuts. This technique should not be used in new pavement as it weakens the pavement.

b) Saw cuts are used primarily for concrete pavements and are generally limited to repairs or temporary works on asphalt pavements.

13.5.11 *Cutting the pavement.* Saw cuts are made with diamond blade saws. The width of the saw cut or kerf (Figure 13-14 refers) should be not less than 10 mm wide and not less than 20 mm deep. The width and depth should be increased if several cables are to be installed in the same saw cut and at entrances to light fixtures, transformer enclosures, and splice chambers. The depth of the kerf should be increased sufficiently to allow slack wire under the pavement joint where a saw cut crosses a construction joint in the pavement. All saw cuts should be in straight lines with vertical sides. The intersecting edges should be chamfered where saw cuts intersect to reduce damage to the cable insulation. It may be desirable to collect the debris from saw cutting and process it to recover the diamond grit.

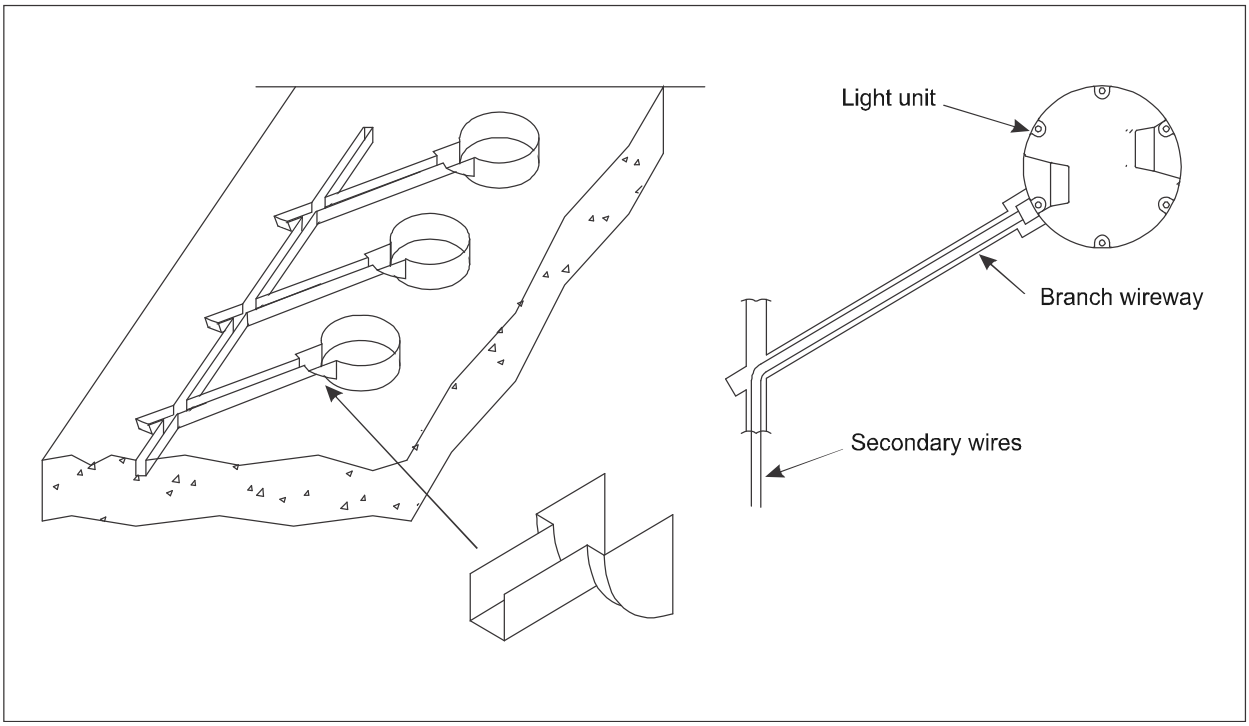

Figure 13-14. Saw kerf detail

13.5.12 *Cleaning the saw cut.* The saw cut should be sandblasted to remove all foreign and loose material. Sand for blasting should be of the proper size and quality for this work and applied with proper size nozzles and air pressure. Immediately prior to installing the cables or wires, the saw cut should be flushed with a high-speed jet of water or steam and dried with a high speed jet of air. Keep this area clean until completion of the work.

13.5.13 *Installation of cables in saw cuts.* Since these cables are for the secondary current of isolating transformers, 600 volt insulation suitable for wet or damp locations should be used. Polyvinyl chloride, polyethylene, rubber and ethylene-propylene-rubber are suitable types of insulation. A jacket over the insulation is not required. The conductor should be stranded copper not less than 1.5 mm^2 in cross-sectional area. If the total length of the conductor will exceed 350 m, the conductor size should be not less than 6.0 mm^2. Usually single-conductor wire is used, but two-conductor cable is acceptable. Do not splice the cable in the saw cuts; use only full length runs of cable. The cables should be placed at the bottom of the saw cuts and anchored with rubber or plastic wedges or with non-corrosive metal clips. There is no need for separation of cables when more than one cable is placed in the same cut. The wedges or clips should be spaced approximately 1 m apart except that closer spacing may be desired at pavement joints, saw cut intersections, and entrances to splice chambers or lights. Cables should be encased in flexible tubing of polyethylene or other suitable material of not less than 0.3 m in length at joints in the pavements. The size of the tubing should be sufficient to allow movement of the cables. The tubing should be centred on the joint and the ends of the tubing wrapped with tape to prevent the entrance of sealing materials (Figure 13-15).

13.5.14 Alternatively, the secondary wires may be protected by inclusion of "backer rods" which are tubular flexible foam rods (ropes) that are cut to length and put into the saw kerf. The backer rod on top prevents the cables from being encapsulated by the liquid sealer and makes it easier to later remove the cables in case of a fault, etc. The backer rod on the bottom provides a cushion for the cables to help protect against abrasion. Nylon rope could also be used (Figure 13-16).

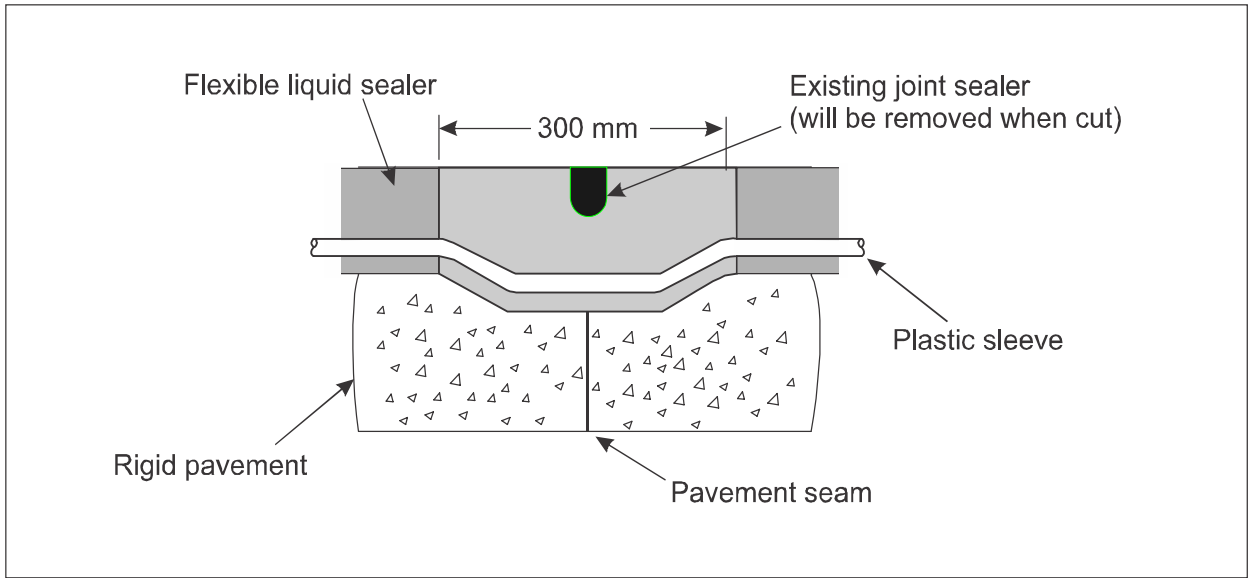

Figure 13-15. Joint crossing

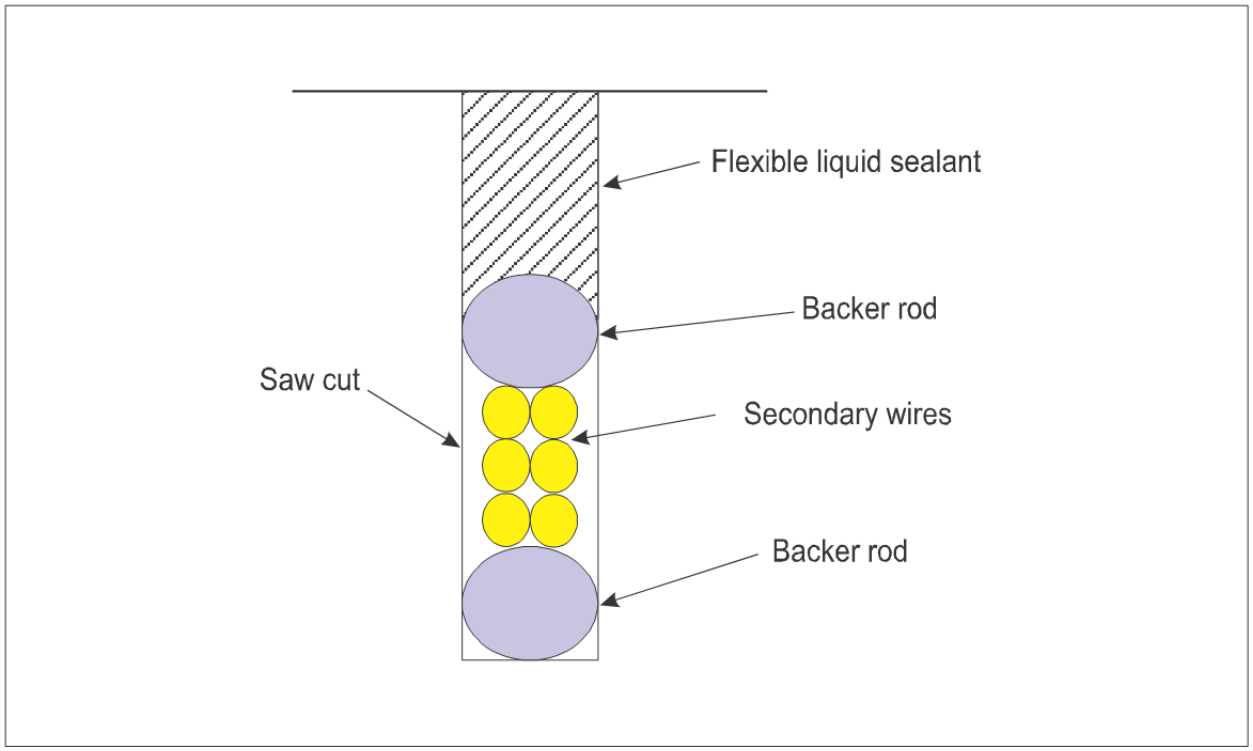

Figure 13-16. Secondary wireway saw cut for in-pavement lights

13.5.15 *Sealing the saw cut.* The saw cut should be sealed with suitable adhesive compounds along the entire length after the cables are installed. The compounds are usually two-component liquid types suitable for the cable insulation and the type of concrete. Test samples of the sealant should have a minimum elongation of 45 per cent. The adhesive components should not be older than recommended by the manufacturer and should not be stored where the temperature exceeds 30ºC or the manufacturer's recommendations. The manufacturer's instructions should be followed in mixing and installing. Usually if the adhesive components are pre-warmed to 25°C before and during mixing, the compound may be satisfactorily installed and cured without the application of external heat if the ambient temperature is 7°C or greater. The joints of pavement in the areas of saw cuts should be packed with roving material such as hemp, jute, cotton, flax or other suitable material to prevent the sealing material from flowing into the open joint. All surplus and spilled material should be removed.

13.5.16 *Cable terminations.* Cables should be properly terminated in fixtures, transformer enclosures, and splice chambers. The entrances to these termination units should be sealed. The termination ends of the cables should be suitably connected and the cable protected from moisture entering the cable between the conductor and the end of the insulation.

13.5.17 *Secondary cable installation in duct.* Alternatively, the secondary wiring may be installed in conduit. Care is necessary to select a duct type whose thermal expansion is compatible with that of the pavement.

Cable marking

13.5.18 *Colour coded tape.* All cables and cable routes should be marked for easy identification.

13.5.19 *Cable tagging.* Installed primary airfield lighting cables should have cable circuit identification markers attached on both sides of each connector and on each airport lighting cable entering or leaving cable access points, such as manholes, handholes, pullboxes, junction boxes, etc. Tags should be attached to the cable immediately after installation. Cable terminations and potheads should be tagged as to function, facility which it serves, and other pertinent data. Tags should be of suitable size and thickness, using letters not less than 6 mm in size and of non-corrosive material. They should be securely attached to the cable using nylon cord. Marking of tags should consist of an abbreviation of the name of facility or facilities served by the cable, the letter indicating the type of service (power, telephone, control and radio frequency (coax)) provided by the cable. Where telephone type cable is used for control functions, it should be marked as a control cable, not a telephone cable. Where two or more identical cables are used to serve the same facility, they may be bundled under one tag.

13.5.20 Markers should be of sufficient length for imprinting the cable circuit identification legend on one line. The cable circuit identification should match the circuits noted on the construction plans.

Light station identification numbers

13.5.21 Identification numbers, like the one in Figure 13-17, should be assigned to each station (transformer housing installation) as per the plans. Place the numbers that identify the station by one of the following methods:

a) For concrete pavements, stencil identification numbers of 50 mm minimum height using black paint on the pavement side of the transformer housing base plate.

b) Attach a non-corrosive metal disc of 50 mm minimum diameter with numbers permanently stamped or cut out under the head of a transformer housing base plate bolt.

c) Stamp numbers of a 75 mm minimum height on a visible portion of the concrete backfill surrounding the transformer light base.

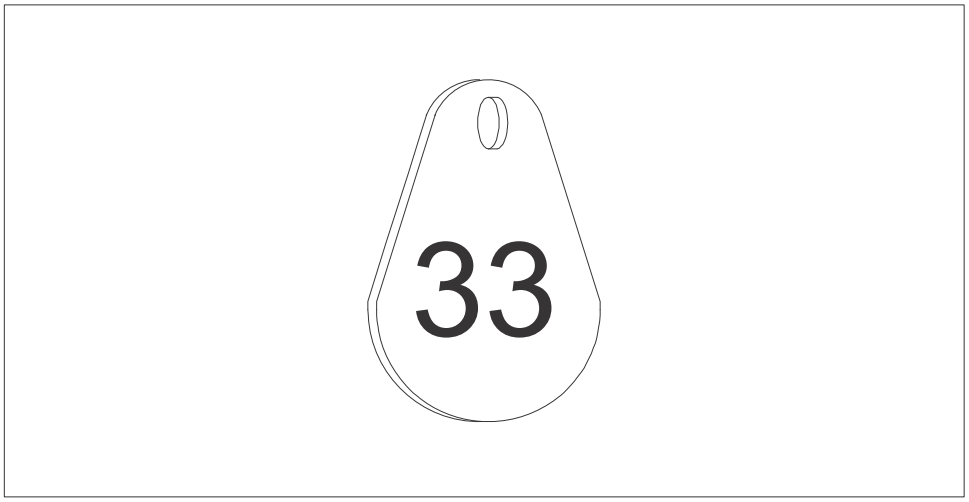

Figure 13-17. Identification tag

Cable route markers

13.5.22 Direct earth-burial cable routes should be marked every 60 m along the cable run, with an additional marker at each change of direction of the cable run, and at each cable splice with a concrete slab marker of suitable size and thickness. These markers should be installed shortly after the final backfill of the cable trench. The markers, as shown in Figure 13-18, should be installed flat in the ground with the top approximately 25 mm above the finished grade. After the concrete marker has set a minimum of 24 hours, the top surface should be painted bright orange (or alternate conspicuous colour) with paint suitable for uncured exterior concrete. Each cable marker should have the following information impressed upon its top surface:

a) the word "CABLE" or "SPLICE". The letter designating the type of cable spliced should precede the word "SPLICE";

b) the name of the facility served;

c) the type of cable installed should be marked with "POWER", "CONTROL", "TELEPHONE", "COAXIAL" or with suitable abbreviations for these terms. The designation of all type cables installed should be shown on the marker;

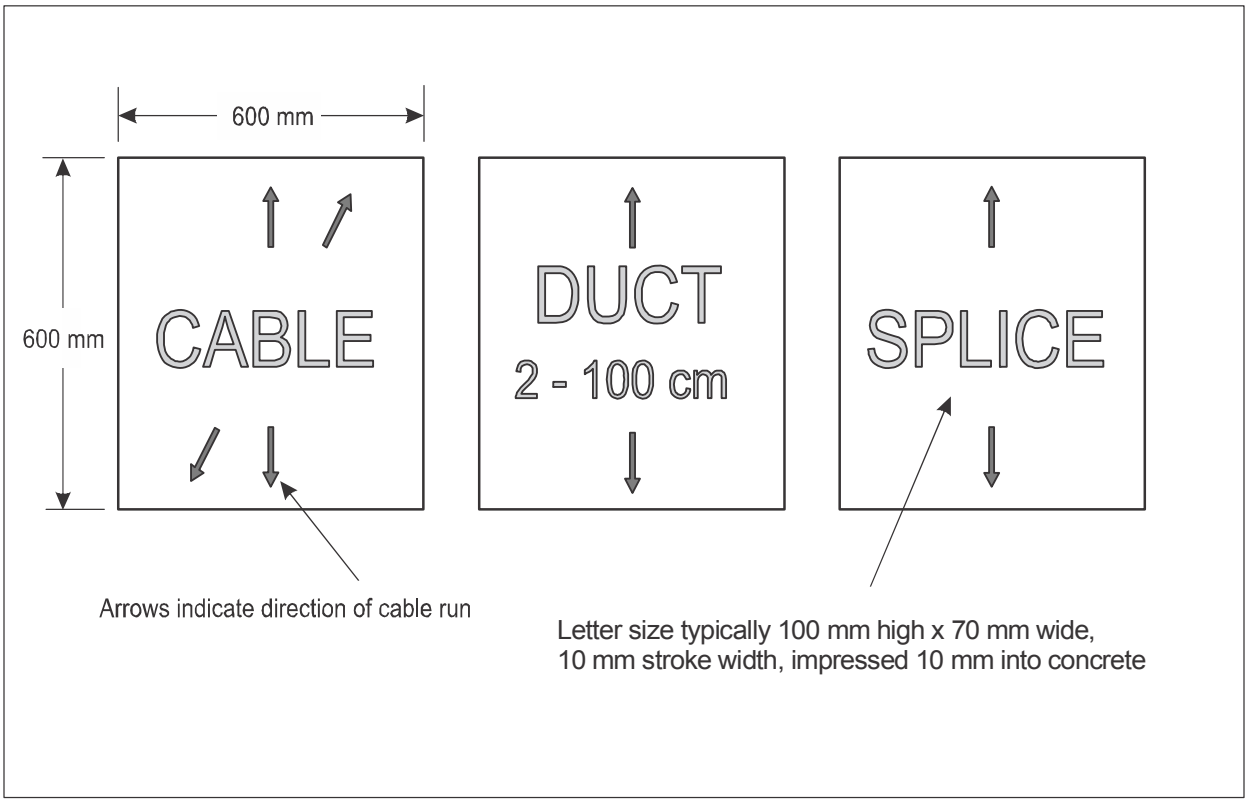

Figure 13-18. Cable markers

d) arrows to indicate the direction or change of direction of the cable run;

e) the letters should not be less than 100 mm high, 70 mm wide and 10 mm deep;

f) cables installed in duct or conduit should have cable markers installed every 60 m and at every change in direction of cable, except markers should not be installed in concrete or asphalt surfaces; and

g) manholes and handholes should be identified by purpose.

13.6 DIRECT BURIAL OF AGL TRANSFORMERS

Direct burial of AGL transformers, as shown in Figure 13-19, should usually be installed at the same depth as the cables connected to the transformers. Transformers and cables should be arranged so that there will be no bends or stresses on the connectors and the cables and leads should be provided with slack to accommodate earth settling and frost heaves. Use proper connectors and tape the outside joint with two or three turns of electrical tape. Do not make splices for connecting the cables to the transformers.

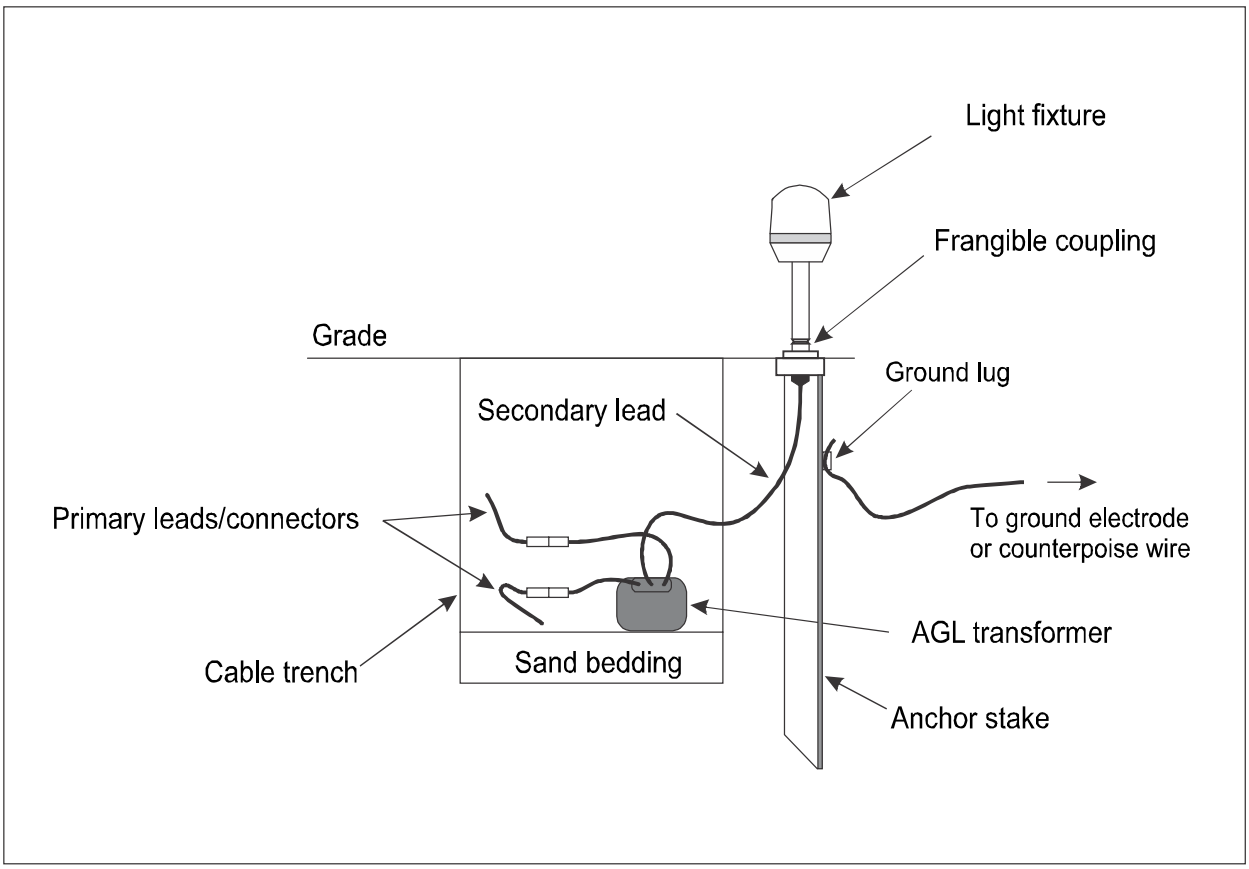

Figure 13-19. Direct burial of AGL transformer with stake-mounted light fixture

13.7 TRANSFORMER HOUSINGS/LIGHT BASES

Installation with transformer housings/light bases

13.7.1 Most cable connections to the AGL transformers are in special housings, in the bases for lighting fixtures that are below the surface at the edge of paved runways or taxiways or in the pavement. Preferably, these housings are installed at the designated locations in a poured concrete foundation which encases the enclosure container by not less than 10 cm to 15 cm of concrete around the bottom and sides. Metal conduits connected to entrances of the container for admitting the cables of the circuit should extend through the concrete walls. The top of the container must be level and at the proper depth below the top surface of the concrete for mounting the light fixture or cover plate. A holding device or jig should be used to maintain level, alignment and proper depth of the top of the enclosure container during installation and curing of the concrete. The ends of the cables are pulled into the enclosure container and the end of the conduit outside the concrete foundation is sealed around the cable with a suitable compound to keep the enclosure free of water. The elevated lights, semi-flush lights or blank covers mounted on these containers should include a gasket or other means of sealing to prevent water from entering the container. An example of such a transformer housing is shown in Figure 13-20.

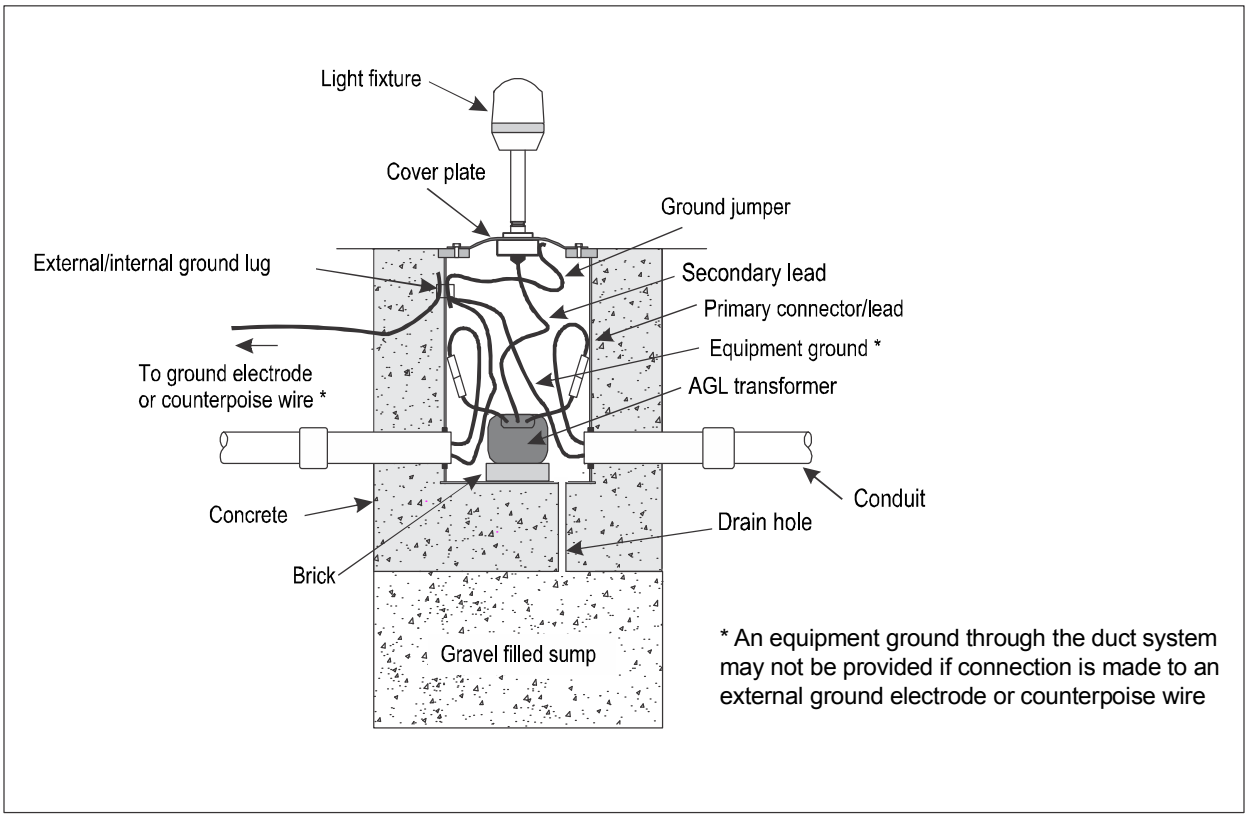

Figure 13-20. Light unit on transformer housing

Installation in existing pavement

13.7.2 If lights are to be installed in existing pavements, installing the transformer housing in a concrete foundation may not be practical. Usually the transformer housing is located at the edge of the pavement and the secondary cables to the light are installed in saw cuts. A transformer housing, junction box or the light fixture may be installed at the location of the lights in order to make the connections, which are done by boring a hole of the proper size and depth in the pavement. The light fixture may be mounted on a housing or be of a type suitable for installing directly in the hole. Holes of proper diameter for the fixtures or housings should be bored in the pavement with diamond-edged bits. The bottom of the hole for junction boxes and light fixtures should be flat or slightly concave except that an area 2.5 cm wide around the perimeter should be flat. If the holes are drilled too deep they should be filled with sealant compound to the desired depth and the compound permitted to cure before proceeding with the installation.

Installing the enclosure

13.7.3 The sides and bottom of the transformer housing, junction box or fixture should be sandblasted immediately prior to installation. Also sandblast the inside faces of the bored hole. The bottom and sides of the enclosure or fixture and the faces and bottom of the bored hole should be covered with a coating of a suitable sealant using the minimum amount that will completely fill the space between the concrete and the fixture or enclosure. The sealant compound is usually a two-part paste compound which is mixed and installed in accordance with the manufacturer's instructions. A holding device or jig should be used for installing each light or enclosure to assure its proper elevation and alignment. The holding device should be left in place until the sealant has set. The cables should be pulled in and brought into position for connecting or splicing as required and the entrance should be sealed. All surplus sealant or embedding compound should be removed.

Prefabricated housings

13.7.4 Alternatively, the AGL transformers may be installed in a prefabricated housing located at the side of the runway and the secondary leads to the light units are routed through conduit. Such transformer housing is shown in Figure 13-21 with equipment grounds also installed in the secondary conduit.

Installing AGL transformers in housings

13.7.5 When isolating transformers are installed in transformer enclosures, the transformers should be positioned with a flat side on the bottoms of the enclosures, if possible. Connect the cables to the leads of the transformers using suitable connectors, not splices, and tape the joints. Connectors should lie flat on the bottoms of the enclosures without bending or tension if possible. Ground connections on the isolating transformers should be connected to the equipment ground wire or counterpoise if such connections are provided. If the internal temperatures in the enclosures will be more than 120°C, a section of foil between the light fixtures and the transformers will reduce the effects of the heat on the transformer. According to some local practices, the AGL transformer is placed on a brick or affixed to the wall of the housing (by means of a shelf or special hanger) to keep it elevated from water that may accumulate in the bottom of the housing.

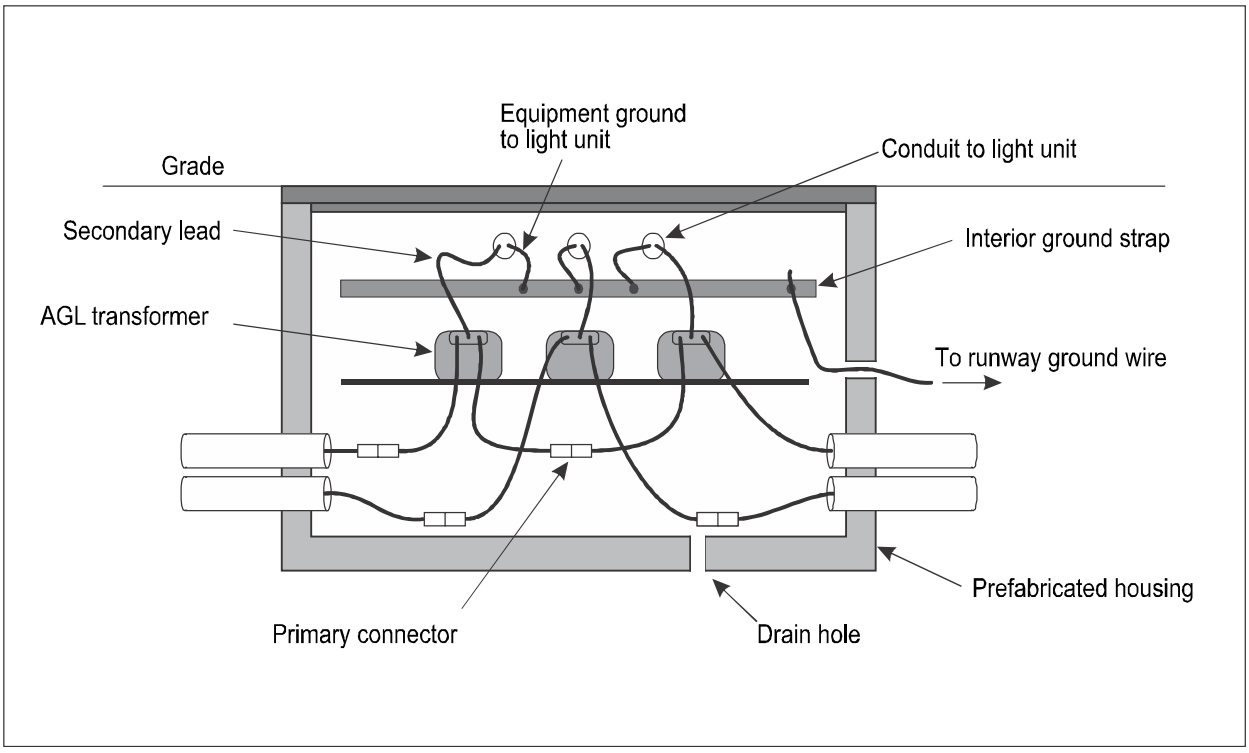

Figure 13-21. Multiple transformers in a prefabricated housing

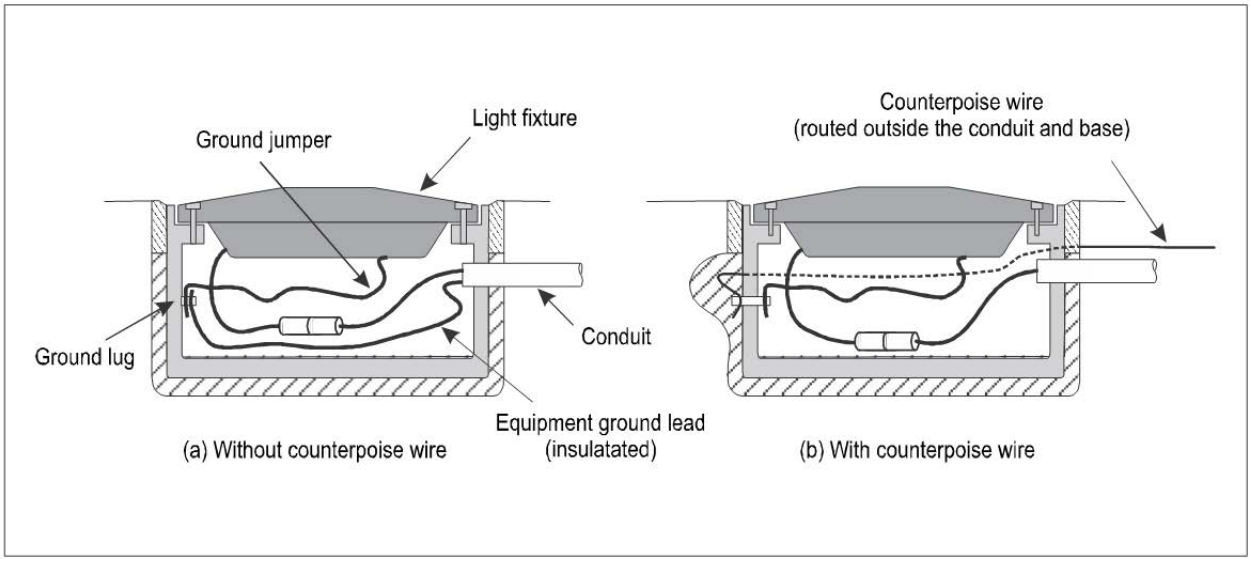

Figure 13-22. Shallow base installation

13.8 SHALLOW LIGHT BASE INSTALLATION

For existing pavements, a shallow base or receptacle is used for installation of the in-pavement light fixture as shown in Figure 13-22. The base is placed into a cored hole in the pavement and held in position by means of a special jig to ensure proper azimuth, elevation and level. A liquid sealer is used to fill the remaining space between the base and sides of the cored hole. The secondary wiring to the optical assembly is brought to the fixture through means of conduit installed in a saw cut or placed directly into the saw cut. The equipment grounding is extended to the optical assembly by means of a ground jumper which is of sufficient length to enable removal of the optical assembly clear of the base. The equipment ground is typically an identified insulated wire of 14 mm^2 (#4 AWG) size. Where a counterpoise wire is installed for lightning protection, the equipment ground is not needed and the ground jumper is the connecter to the counterpoise by means of an external/internal lug.

Chapter 14

CABLES FOR UNDERGROUND SERVICE AT AERODROMES

14.1 CHARACTERISTICS OF CABLES FOR UNDERGROUND SERVICE

Insulation

14.1.1 The following insulation materials are commonly specified because they provide the maximum rated conductor temperatures for operating, overload, and short circuit conditions for cables rated up to a maximum of 35 kilovolts:

a) *Cross-linked polyethylene (XLP).* This thermo-setting compound has excellent electrical properties, good chemical resistance and good physical strength characteristics.

b) *Ethylene-propylene rubber (EPR).* This compound has electrical properties which are considered equal to cross-linked polyethylene; therefore, the contractor should be given the option to provide either type.

c) *Thermo-plastic elastomer (TPE).* This cable material provides effective electrical insulation and toughness in thin layers as well as good flexibility over a range of temperatures.

d) *Polyurethane (PUR) jacketed.* This cable jacket is halogen free and resistant to de-icing products.

14.1.2 The following insulation materials may be used where special circumstances warrant their lower rated conductor temperatures or their lower rated maximum voltage class.

a) *Rubber.* Rubber insulated conductors provide ease of splicing, good moisture resistance and low dielectric losses.

b) *Paper insulated.* Use paper insulated cable for low ionization, long life, high dielectric strength, low dielectric losses and good stable characteristics under temperature variations. As with varnished-cambric insulation, paper insulation requires a suitable protective metallic sheath. It may be specified as an option when existing cables are paper insulated, or as a requirement when the extra cost is justified because neither cross-linked polyethylene or ethylene-propylene rubber provide the required qualities.

c) *Butyl rubber.* This thermosetting insulation has high dielectric strength and is highly resistant to moisture, heat, and ozone. It can be used up to 35 000 volts, but has lower rated conductor temperatures than either cross-linked polyethylene or ethylene-propylene rubber.

d) *Silicone rubber.* This thermosetting insulation is highly resistant to heat, ozone, and corona. It can be used in wet or dry locations, exposed, or in conduit. It has the highest rated conductor temperature but can be used only for applications up to 5 000 volts.

14.1.3 Table 14-1 provides a conversion from AWG to metric equivalent. The equivalents are rounded upwards (e.g. for AWG #10 with area of 5.26 mm^2 the metric equivalent is 6 mm^2).

Table 14-1. Conversion from AWG to metric equivalent

AWG no.	*mm^2*	*metric equivalent (mm^2)*
2	33.631	35.0
4	21.151	25.0
6	13.302	16.0
8	8.366	10.0
10	5.261	6.0
12	3.309	4.0
14	2.081	2.5
16	1.309	1.5
18	0.823	1.0
20	0.518	0.75
22	0.326	0.5

Note.— As a general practice, for 6.6 ampere circuitry; for secondaries, the wire used is the metric size 4 mm^2 or #12 AWG. For primaries, it is the metric size 10 mm^2 or #8 AWG.

14.1.4 Some States have incorporated Standards for airport installations into their electrical code.

14.2 CABLE SHEATHS

Non-metallic

14.2.1 Non-metallic sheaths should be flexible, moisture repellent, and long lasting. Neoprene, which is often used as non-metallic cable sheaths, is unsuitable in many locations. This material frequently absorbs excessive amounts of water which may penetrate through to the insulation. Some non-metallic-sheath materials, especially in some tropical areas, are reported to be damaged by micro-organisms, insects and plant life. Some sheath materials, which perform well when installed underground or in conduits, deteriorate rapidly if installed where they are exposed to sunlight. Materials which become brittle at low temperatures should not be used in cold regions. In some locations, rodents frequently damage non-metallic-sheathed cable. In these areas, the cable should be installed in ducts or metallic-sheathed cable should be used.

Metallic

14.2.2 Cables exposed to mechanical damage or high internal pressure require a metallic sheath, such as lead, aluminium or steel. Certain insulations, such as paper and varnished cambric, require such protection in all cases.

14.3 CABLE COVERINGS

A suitable covering or jacket may be required for corrosion protection of metallic sheaths.

14.4 SHIELDED CABLES

Shielding of a medium-voltage distribution cable is required to confine the electric field to the insulation itself and to prevent leakage currents from reaching the outside of the cable. Insulation shielding is required on all non-metallic-shielded cable rated to kilovolts and above, except for aerodrome-lighting series-circuit cables, and all metallic-sheathed cable rated five kilovolts and above. Shields should be grounded to reduce the hazards of shock. Grounding is required at each termination otherwise dangerous induced shield voltages may occur.

14.5 CABLE FIREPROOFING

14.5.1 Cables in manholes, handholes, and transformer vaults operating at 1 400 volts or over, or exposed to the failure of other cables operating at these voltages, should be fireproofed with a suitable spray coating. Exceptions may be made where physical separation, isolation by barriers, or other considerations permit.

14.5.2 Special attention should be given to the cables that enter the main manhole and floor raceway system of the electrical vault. It is at this point that a fault on one cable might propagate to other cables of the airfield lighting necessitating major repair work.

14.6 PROTECTION AGAINST CORONA DAMAGE

Insulation of high-voltage cables which may be damaged by ozone should be protected against this damage by controlling corona, which produces ozone, by placing a thin semi-conducting film between the conductor and its insulation. This film fills the voids between the conductor and the insulation thus preventing the generation of corona and hence ozone.

14.7 CABLE CONDUCTORS

Annealed copper is used in most forms of insulated conductors because of its high conductivity, flexibility, and ease of handling. Medium hard-drawn copper has a greater tensile strength than annealed copper. These conductors may be permitted as an option except where corrosive conditions limit their usage.

14.8 HEALTH AND ENVIRONMENTAL ISSUES

14.8.1 Health and environmental issues should be taken into account when selecting cables. One should avoid products that contain halogens and are problematic for recycling such as polyvinyl chloride (PVC) and lead (Pb). Such cables preferably should be replaced by more environmental friendly cables as those indicated in the following Standards:

a) flame and fire retardant (IEC 60332-3-24);

b) halogen free cable (IEC 60754-1);

c) non-corrosive and non-toxic cable (IEC 60754-2); and

d) low smoke emission and opacity cable (IEC 61034).

14.8.2 Designers and those procuring cable should be aware of the directive on the restriction of the use of certain hazardous substances in electrical and electronic equipment; referred to as the *Restriction of Hazardous Substances Directive* (RoHS, 2002/95/EC) restricting the use of hazardous materials for electrical equipment. It is related to the *Waste Electrical and Electronic Equipment Directive* (WEEE, 2002/96/EC) pertaining to collection, recycling and recovery targets for electrical products and is part of a legislative initiative to solve the problem of huge amounts of toxic e-waste.

14.9 CLASSES OF SERVICE

Low-voltage cables

14.9.1 Low-voltage cables — insulation rated at 600 volts or less — are used to connect the secondaries of series/series isolating transformers to the lamps in the fixtures, for low-voltage distribution circuits, as low-voltage feeder circuits to single units and the shorter circuits. The conductors are usually copper but may be aluminium. Either single- or multi-conductor cables are used. Both solid and stranded conductors are used but stranded is preferred if frequent flexing of the cable is expected. The cross-sectional area of the conductor may vary from 2.5 mm² to 4 mm² (#14 to #12 AWG) or larger if necessary to decrease the voltage drop.

14.9.2 For two conductor secondary leads a colour coding is used depending upon state practice. In Europe the identified conductor (neutral) is brown in colour; the live conductor is blue in colour. In North America, the identified conductor (neutral) is white and the live wire is black. The identified conductor should go to the large pin of the secondary connector and to the shell (threaded or prefocused) portion of the socket (see Figure 14-1).

Series aerodrome lighting cables

14.9.3 Series lighting cable refers to the single conductor cable used for the primary loop circuit and feeders back to the electrical vault. The series current used in these circuits is either 6.6 or 20 amperes. The conductor size commonly used is 10 mm^2 (#8 AWG) or 16 mm^2 in the cross-section (#8 AWG). The conductor is usually stranded but a solid conductor can also be used. The insulation is usually 5 000 volt rated. A non-metallic jacket over the insulation is commonly used. Metallic-tape shielding between the insulation and jacket or between the jacket and non-metallic covering is often used but may not be required for some installations. The preferred series lighting cables are stranded copper, cross-linked polyethylene, ethylene-propylene-rubber or butyl-neoprene rubber insulation; chlorosulfonated polyethylene, polyvinyl chloride, polyethylene, or heavy duty neoprene jacketed — all metal-tape shielded types.

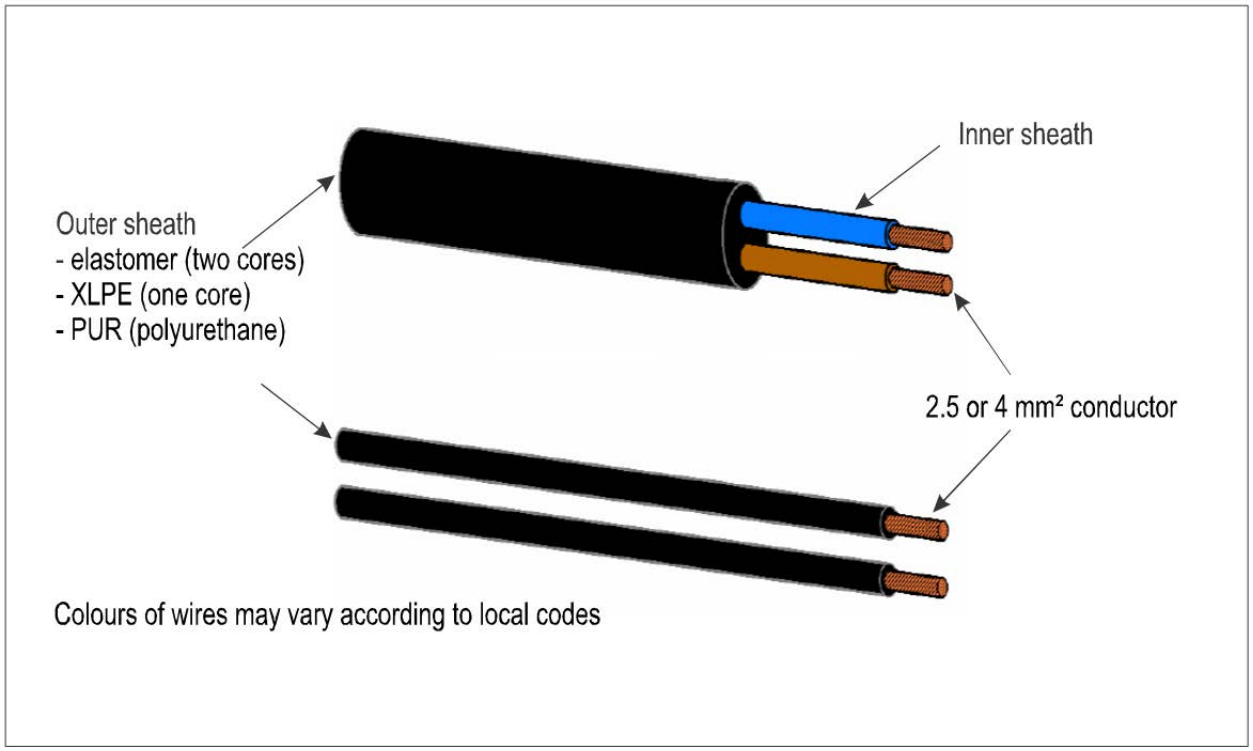

Figure 14-1. Secondary wire

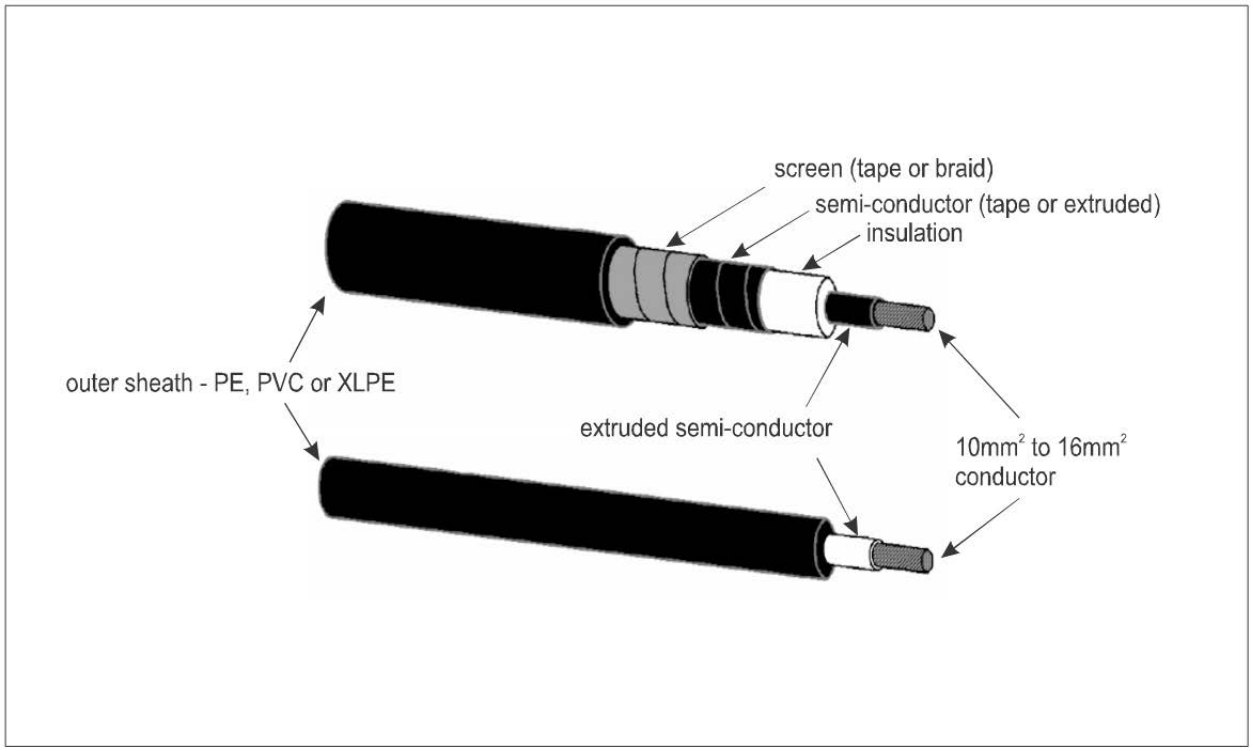

Figure 14-2. Primary cable

14.9.4 The voltages used usually range from 600 to 3 030 volts for constant current regulators up to 20 kVA providing an output of 6.6 amperes. Higher voltages may be obtained from larger regulators, e.g. 4 545 volts for a 30 kVA regulator operating at 6.6 amperes. However, it is recommended that regulators should be limited to the 20 kVA size and the lighting system be installed using more than one circuit to distribute the load.

Control cables

14.9.5 Control cables are low-voltage cables usually in pairs or multi-conductor. A group of single-conductor cables may be used for some simple control circuits. Some control cables have one or two larger conductors for the line voltage and/or neutral and several smaller conductors for the individual controls. Other installations may use a pair of larger wires for the line and neutral and other cables with many smaller conductor wires for the individual controls. Multi-conductor control cables have seven, twelve, sixteen or more conductors. Most control cables have stranded copper conductors. The size of the conductor is selected to keep the line voltage drop within an acceptable range. The cross-sectional size of the conductors is usually between 2.5 mm^2 and 0.5 mm^2 (#12 to #22). The insulation resistance rating must be suitable for the control voltage which is usually 250 volts or less. Rubber, polyethylene, polyvinyl chloride, varnished cambric, and paper are some of the types of insulation for control cables. Thin insulation is desirable to reduce the diameter of the cable. Twisted pairs or spiralling of the conductors is desirable for alternating-current control circuits to reduce induced voltage between circuits. Multi-conductor cables must have an outside jacket and may be shielded with metal tape.

Communications cable.

14.9.6 Special intercommunications or telephone circuits should be installed to provide communications between control tower, lighting vaults, and offices or stations. The circuits are usually one or more twisted-pair telephone type cables. These cables should be suitable for underground installation. Although the control cables may be used for communications at some installations, separate cables in separate conduits, or well-separated in the trench, if direct burial, are preferred.

14.10 GROUND WIRES

A ground wire or counterpoise wire should be installed to protect underground power and control cables from high ground current surges in areas where damage from lightning strikes may be expected. The ground wire should be installed between the earth's surface and the underground cables. It is usually an uninsulated stranded copper conductor although, in some States, steel banding has been used. The size of this ground wire should be not less than the largest size conductors which it protects. The cross-section area of the conductor may range from 10 mm^2 to 25 mm^2 (#8 to #4AWG) or larger. It should be a continuous conductor and connected to each fixture, light base and ground rod or connection along its route.

14.11 CAUSES OF CABLE DAMAGE

14.11.1 Cable faults are frequent reasons for aerodrome lighting circuit failures and often require considerable time and effort to locate and repair. Effective methods of reducing cable faults improve reliability of the system. Better knowledge of the causes of damage to cable should aid in choosing types of cable and installation procedures. Some of these causes are examined below.

Mechanical damage

14.11.2 Probably most cable faults are caused by mechanical damage. Poor installation techniques and procedures are probably the most common cause of mechanical damage but frost heaves, vibration from aircraft or vehicle traffic, rodents, ground shifting or settling and many other reasons may physically damage the cable. Some types of mechanical damage are:

a) nicks and scrapes of the insulation;

b) over stressing of the cable when pulling into ducts or unrolling the cable for direct burial;

c) stones or foreign objects in the beds or backfills of trenches;

d) inadequate slack at entrances to or inside of handholes, manholes, light bases, conduits, fixtures, connections to equipment, connectors, splices, along trenches or conduit, or other locations where settling, maintenance, installations or weather may increase stresses;

e) nicking of the conductor at splices or connector joints may later break the conductor.;

f) inadequate separation of cables in trenches, either vertically or horizontally, at slack loops of cable, or places where earth compaction or freezing action may force two sections of cable into direct contact;

g) freezing or frost heaves forcing the cable against ice, frozen earth, or any other solid object or material. Proper cushioning and slack to reduce stress at these points is necessary;

h) improperly supported cables in manholes or other areas where sagging or exposure may result in objects or persons putting pressure on the cable;

i) vibration from traffic passing over the cable or from equipment operation attached to or near the cable may cause fatigue of the conductor or of the jacket and insulation. Where such conditions may exist or be developed, install the cables in ducts which extend well beyond the area of vibration; and/or

j) breaking or separation of conduits or ducts may break the cable. The installation of the ducts and conduit must be properly joined and suitably backfilled and tamped.

Water penetration

14.11.3 Ground fault is formed when water is able to penetrate through the cable sheath and insulation to the conductor. Water penetration or leakage may occur at splices, connections, cable terminations, physical damage areas, unsatisfactory insulation, pinholes from lightning or over voltage, or other defects.

14.11.4 Improperly made splices and improperly installed connector kits are a frequent source of water penetration. (See 14.12 for instructions for making splices and installing connectors.)

14.11.5 In order to avoid water penetration at the ends of cable, these ends should be kept clean and free from moisture before as well as after connecting to the equipment. The ends of spare cables should be similarly protected. Some types of insulation, especially paper and mineral filled, may attract moisture from the atmosphere during periods of high humidity. The ends of the cables of these types should be kept sealed at all times even after connecting to the equipment.

14.11.6 Some insulations, either from defects or composition, may permit excessive water penetration. Quality tests of insulation resistance should detect such defects. There are reports that some neoprene-jacketed cables are not adequately water resistant, although other reports state that cable of this type performs well. Before cable is purchased, the performance of the type of cable at other installations, preferably from the same manufacturer, should be investigated.

14.11.7 Lightning strikes may severely damage cables or the induced voltages may be enough to damage the insulation by creating pinholes. These pinholes are more likely to occur at points of crossing cables or where the cable is near or in contact with metal conductors. Properly installed ground wire or counterpoises should reduce the damage from lightning strikes.

14.11.8 Excessive voltage may be applied to a cable either accidentally or from faulty operation. Damage to the cable may not be noticed immediately.

14.11.9 The installation design should incorporate means for drainage of ducts and manholes in order to avoid lengthy immersion of cables and connectors.

Chemical damage

14.11.10 Often aerodrome lighting cables are located in areas where fuel, oil, acids, or other chemicals may be present regularly or occasionally. These chemicals affect the insulation resistance of some types of cables. If it is known, or suspected, that cables may be exposed to such chemicals, select a type of cable which is resistant to these chemicals. Neoprene and rubber insulation may not be suitable in the presence of some de-icing fluids.

Rodent damage

14.11.11 In some areas, direct burial cable is damaged by rodents, especially gophers, gnawing the insulation. There is some evidence that the rodents may be attracted to the cable either by the heat emitted from it or by its taste. Where rodent damage is a serious problem, it may be desirable to install the cable in ducts or to use metal-sheathing, in particular to protect exposed secondary leads.

Micro-organism or plant damage

14.11.12 Micro-organisms and plants are reported to have damaged some types of cables in tropical or subtropical areas. If it is anticipated that such problems may occur, select a type of cable which is known to be resistant to such micro-organisms and plants.

Ozone and corona damage

14.11.13 Some cable insulations are damaged by ozone and thus by the corona produced by the circuit or by nearby circuits. Cable insulations are available which satisfactorily resist these effects. Select cables with these qualities if the cable is carrying high voltages or may be exposed to other sources of ozone or corona. In the past, some States have used cables which were not protected against corona damage for runway and approach light series systems reasoning that these systems are operated at full intensity for only a relatively small number of hours per year. Consequently, these cables are subjected to high-voltage stress during only a small fraction of the time in service. This practice has been found to be undesirable since the reduction in cost is small and because some of this cable may be inserted into power distribution circuits and subjected to continuous high-voltage stress.

Ultraviolet damage

14.11.14 Some cable insulation, which performs satisfactorily in underground installations, may become brittle and deteriorate rapidly when exposed to sunlight, e.g. used with elevated supports such as approach light towers. Should a cable be exposed in that manner, select a cable with an insulation that resists ultraviolet radiation or install the cable in metal conduit

Cable deterioration

14.11.15 Most cable insulation deteriorates slowly. The service life of underground cables should be ten to twenty years.

14.12 CABLE CONNECTIONS

Note.— Cable splices should not be located within ducts — it is tolerated only in manholes and handholes.

Cable splices

14.12.1 All cable splices should be performed by experienced and qualified cable splicers using high standards of workmanship. Splicing methods and materials should be of types recommended by the manufacturer of the splicing material for the particular type of cable being spliced. All cable splices should meet the following requirements.

14.12.2 *Power cables insulated for more than 5 000 volts.* Splice kits designed for the type of cable being spliced should be used. When such kits are not available, taped splices made in accordance with the paragraph on 0taped splices (see 14.2.6) may be used. Epoxy or resin splices should not be used.

14.12.3 *Power cables with 600 to 5 000 volt insulation.* Pressure epoxy-resin splices envelopes and cast splice kits designed for the cable should be used in strict conformance with the manufacturer's instructions. Taped splices should be used only if necessary.

14.12.4 *Power cables insulated for 600 volts or less.* Cast splice kits or pressure epoxy-resin splice envelopes suitable for all direct earth-burial cable may be used. Taped splices using pre-stretched or heat-shrinkable tubing as a covering may also be used.

14.12.5 *Control and telephone cables.* A type of re-enterable filled splice envelope is available for use on thermoplastic-insulated non-pressurized cables. Splices to existing pressurized, lead-covered or paper-insulated cables should be in accordance with the requirements of the authority involved.

Taped splices

14.12.6 Taped splices are usually used only when satisfactory connectors and splice kits cannot be obtained. If taped splices are to be made, the correct technique must be used in order to obtain satisfactory service. The technique described below is intended for single-conductor cable but also applies with suitable adaption to multi-conductor cable splices.

14.12.7 Keep the ends of the cables to be joined clean and protected from moisture at all times.

14.12.8 As illustrated in Figure 14-3, carefully taper and remove the covering, jacket, metallic shield, sheath and insulation from the ends of the cables to be joined. Remove all traces of insulation from the conductors for a length of approximately 3 mm plus half the length of the crimp connector being careful not to nick the conductor. Smoothly taper the insulation back from the conductor for at least 4 cm. Remove the sheath, metal tape, jacket, etc. back along the outer surface of the insulation layer for an additional 2 cm. This offset of the tapering should block paths of water penetrating along the tapering. Keep intact the metal tape for shielding, if involved, over the entire length of the splice. Similarly, taper the non-metallic sheath for 2 cm or more. Remove any steel or metal armour or outer metal covering but leave stubs or ends for reconnecting across the splice.

14.12.9 Use a crimp-type connector to join the ends of the conductor. Crimp the connector onto the ends of the conductors using a tool designed to make a complete crimp before the tool can be removed. The conductor connector may also be soldered if desired.

14.12.10 Using rubber or synthetic rubber tape of good quality, carefully wrap the joint one layer at a time maintaining enough tension on the tape for approximately 25 per cent elongation and overlapping the tape approximately 50 per cent of its width. Each layer will extend further up the tape along the insulation. Continue this build-up of layers of rubber tape to the full size of the insulation layer.

14.12.11 If shielding tape is used over the insulation, connect the metal tape, which should have been kept intact, across the splice by soldering or using suitable connectors. Wrap with extra metal tape of similar type if needed.

14.12.12 Continue to wrap the rubber tape as in 14.12.10 to not less than 1.5 times the diameter of the cable. Carefully apply tension on the tape to prevent any voids and to obtain good adhesion to the cable surfaces and each inside layer of tape.

1. Strip the cables for 3 mm plus half the connector length.
2. Carefully pencil the insulation by 4 cm.
3. Fasten the conductors with crimped sleeve.

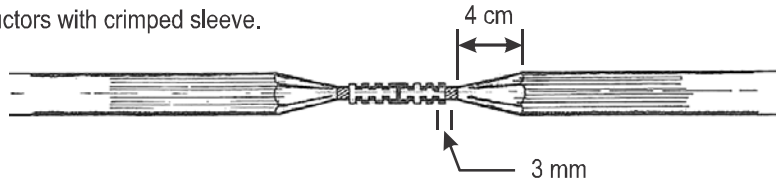

4. Clean the insulation surface to be taped with chlorothene or isopropyl and allow to dry.

5. Apply one layer of electrical tape under high elongation (this tape will stretch in excess of 600% before breaking) maintaining a half-lap and extending 2.5 cm beyond the pencilled area.

6. Build up insulation to normal cable outside diameter with electrical tape half-lapped and evenly spaced.

7. Apply 2 additional layers of electrical tape half-lapped and extending 8 cm beyond the pencilled area.

8. Cover the whole splice with 4 layers of tape half-lapped and extending 13 cm beyond the built-up area.

Figure 14-3. Taped splice — typical (refer to the manufacturers' instructions)

14.12.13 Over the rubber tape, add several layers of high-insulation resistance, flame-retardant, weather-resistant and cold-resistant tape. Apply the plastic tape with appreciable tension and overlapping each turn by approximately 50 per cent of its width. The plastic tape should extend for 3 cm or more along the surface of the insulation of the sheath on each side of the splice.

14.12.14 If the cable has a steel-armour or other metallic cover, connect a length of grounding braid across the splice and fasten it to the armour on the cable with suitable clamp connectors and/or solder on each side of the splices (Figure 14-4 (a) refers). If the cable is lead encased, make a suitable wiped-lead joint over the splice to provide a waterproof seal to the lead covering on the cable. If the metal covering is protected from corrosion by a coating, apply a coating of similar material over the entire surface of the cable and splice in the area of this work.

14.12.15 Cable splicing is best done using commercially available splicing kits containing butt splice connectors and epoxy potting compounds. These help provide a waterproof and mechanically strong splice. Armoured cables are difficult to splice if the mechanical strength is to be maintained; special mechanical connections need to be fabricated which will grip the armour firmly.

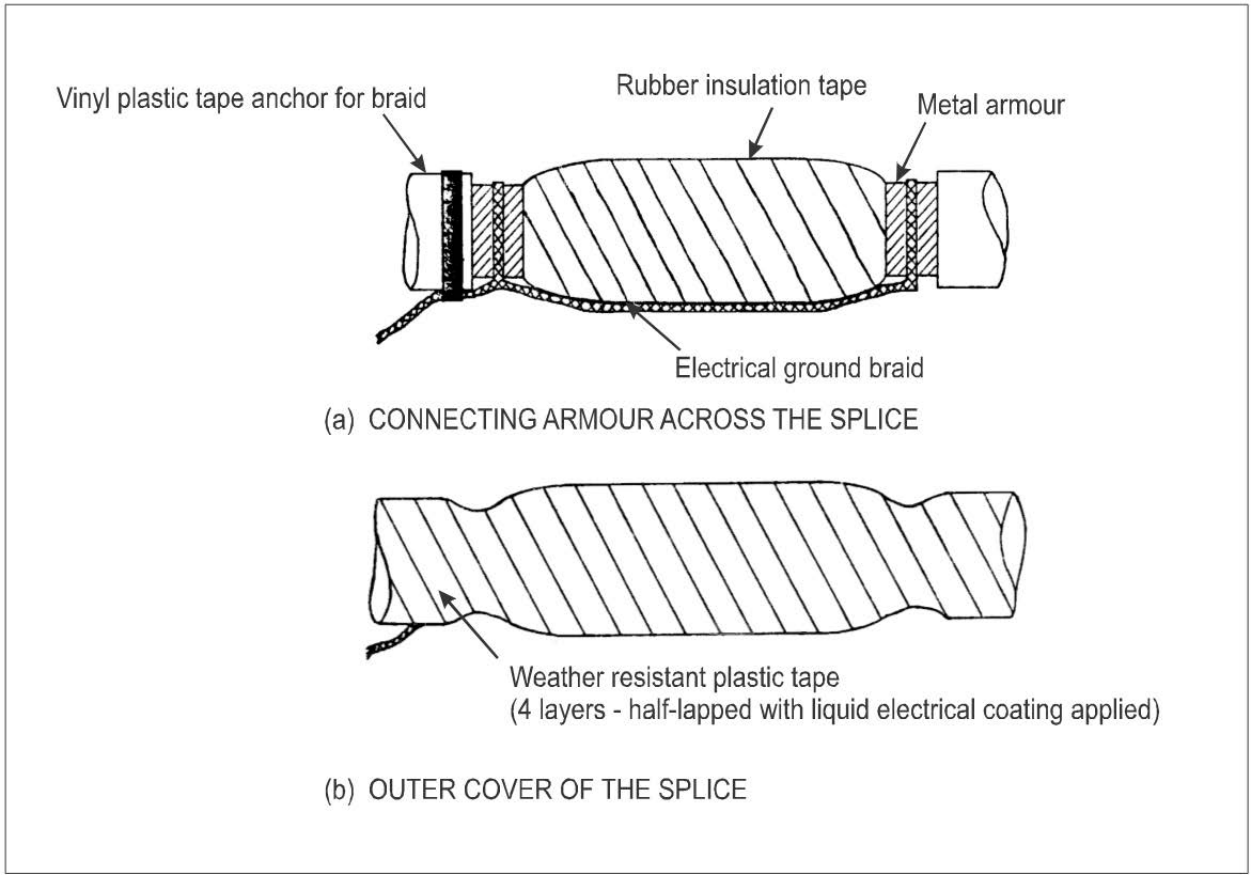

Figure 14-4. Taped splice for metal-armoured cable

14.13 CONNECTOR KITS FOR AERODROME LIGHTING

14.13.1 Use of connector kits. In recent years most series-circuit connections have been made using connector kits. Although the cost of connector kits is significant, the time saved in installation and the ease with which circuits can be opened and reclosed when locating faults have made their use desirable. Since the leads of most isolating transformers are now manufactured with connectors, cable connectors are required and provide an easy means of connecting or disconnecting the transformer into the series circuit and to the light. Single-conductor primary connectors and two-conductor secondary connectors are shown in Figure 14-5 and Figure 14-6.

Installation of connectors

14.13.2 The cable ends should be prepared carefully in accordance with the instructions keeping both the cable ends and the connector surfaces free of dirt and moisture. Make certain that any cavities between the cable and interior of the connector are filled with the gel provided to prevent voids. After joining the connectors ensure that air is not trapped which may tend to force the connection apart. Taping over the joint with vinyl electric tape to keep the area clean and from separating is suggested.

14.13.3 Figure 14-7 illustrates the use of primary connectors and field splices. Although the modified method (b) increases the initial cost of labour for installation, it is recommended later reduction of maintenance costs. The use of factory-moulded connectors and slices is preferred over that of field assembled connectors as shown in (a).

14.14 CONNECTION OF CONDUCTORS

Power conductors

14.14.1 Connections of cable conductors should be made using crimp connectors utilizing a crimping tool designed to make a complete crimp before the tool can be removed. Split-bolt connectors may be used for low-voltage circuits of 600 volts or less.

Control and telephone cables

14.14.2 Joining of telephone or control conductors should be done with a twisted and soldered splice or an appropriate self-stripping, pre-insulated connector installed with the specific tool designed to crimp the connector. Colour-coding of the conductors should be followed throughout the installation.

Cable armour and shields

14.14.3 Armour shields should be electrically bonded across the splice by cleaning and soldering. Use sections of metal braid and conducting tape, if needed. Armour and shielding should be completely insulated from each other and from the ground, except as noted in 13.5.6.

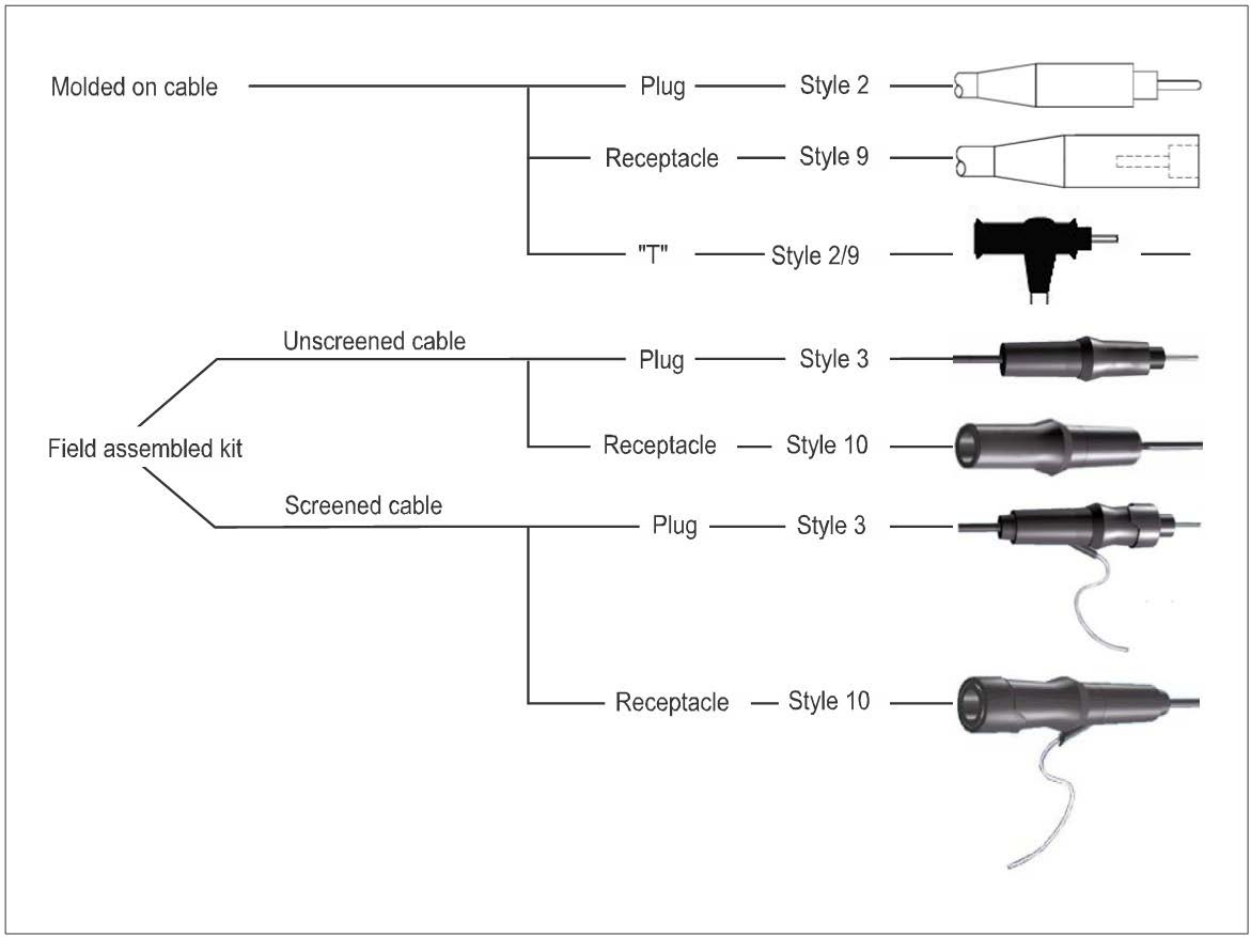

Figure 14-5. Primary connectors

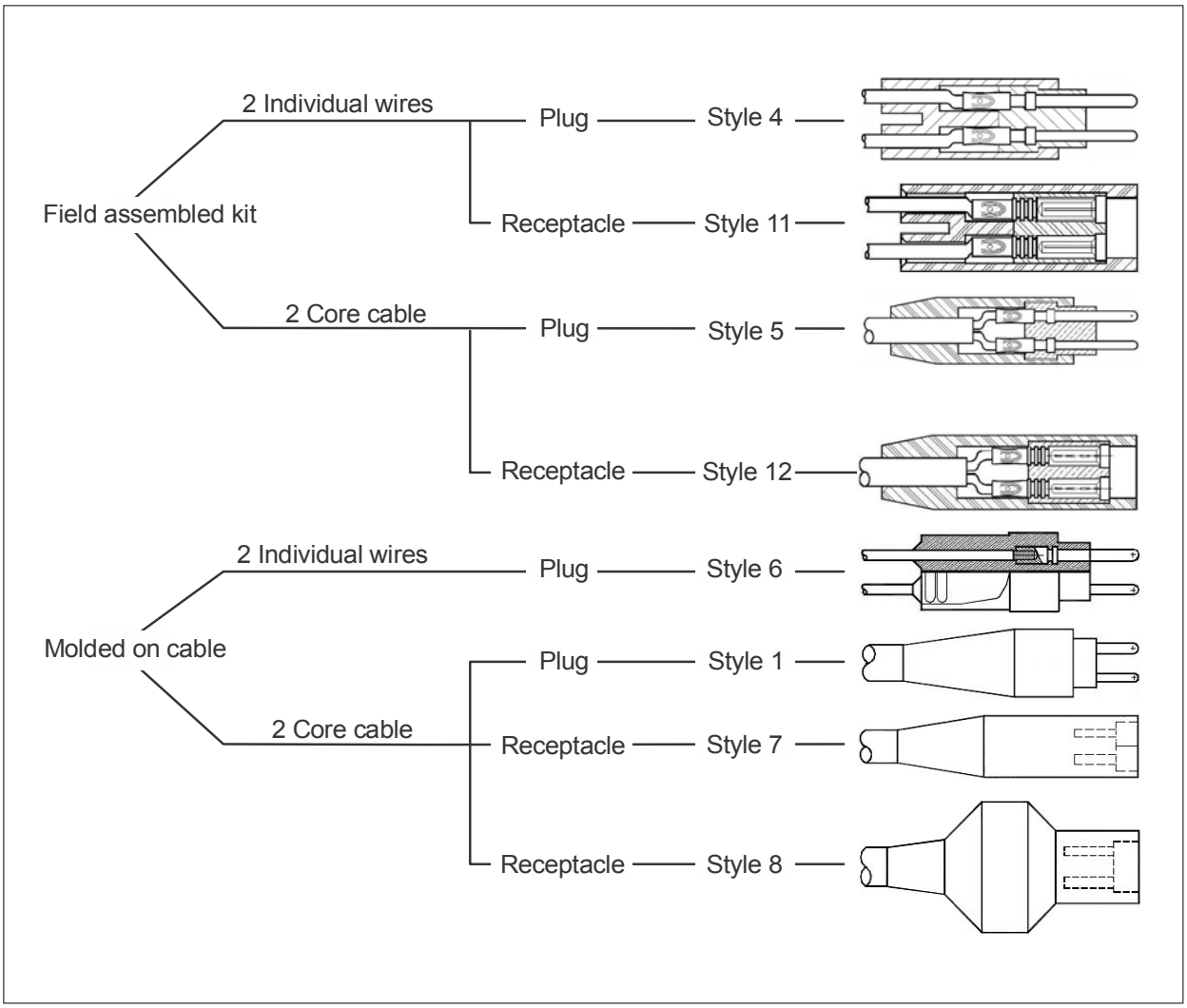

Figure 14-6. Secondary connectors

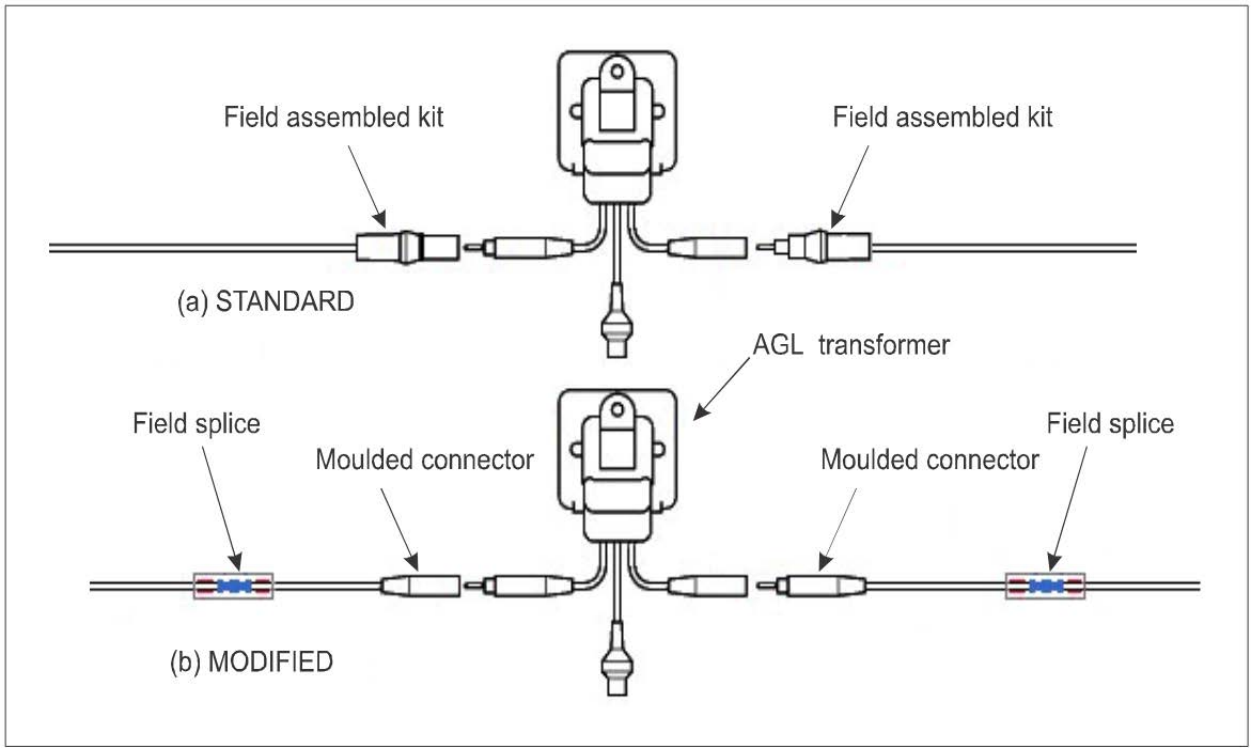

Figure 14-7. Primary connections with field splices

Chapter 15

ACCEPTANCE AND MAINTENANCE TESTING

15.1 APPLICATION

The test procedures described in this section apply to the acceptance tests of new installations and should be performed before making the system operational.

15.2 GUARANTEE PERIOD

Damp or dirty cable connectors and cable damage due to faulty installation practices often fail several months after installation. Each installation contract should include a guarantee clause specifying a period of at least one year during which the installing contractor can be held responsible for repairing and replacing all cables and equipment failures resulting from poor work or defective materials and equipment.

15.3 INSPECTION PROCEDURES

15.3.1 *Visual examination.* The most important of all inspection and test procedures are thorough visual inspections. Visual inspections should be made frequently during installation, at completion of installation, and before energizing the circuits. A careful visual inspection will reveal defects that can be corrected prior to acceptance tests and energization. Serious damage may occur if defects are subjected to electrical tests or energization. Visual inspections should include inspection appraisal of:

a) correctness of external connections;

b) good work performance;

c) cleanliness;

d) safety hazards; and

e) specific requirements for individual items.

15.3.2 All equipment manufactured under specifications should pass strict factory tests prior to shipment, but it should be visually inspected for shipping damage immediately upon receipt.

15.4 CABLE, CONNECTORS AND ISOLATING TRANSFORMER INSPECTION

The primary and secondary cable leads of the transformers should be supplied with factory-installed moulded connectors. Visual inspection of these items during installation is especially important, as minor cuts, bruises or mishandling may result in a progressive deterioration, which will eventually cause complete failure but not until sometime after acceptance tests. During installation, these items should be inspected to determine the following:

a) that the mating surfaces of moulded connectors are clean and dry when plugged together. If clean and dry inside, these high-voltage connectors with taping form a connection equal to, or superior to, a conventional high-voltage splice. Conversely, if they are wet or dirty inside, no amount of taping can produce a satisfactory connection. Two or three turns of tape are recommended to hold the connector together and keep the parting lines clean. Cleanliness of mating surfaces can best be ensured by keeping the factory-installed caps in place until the final connection is made. The mating surfaces of uncapped connectors should not be laid down, touched, or breathed upon. If it is necessary to break a connection, the connectors should be immediately capped;

b) that the connectors are completely plugged together. After initial plugging, trapped air pressure may partially disengage the plug and receptacle. If this happens, wait a few seconds and push them together again. Apply two or three turns of tape to hold them in place;

c) that the cables have not been cut by shovels, kinked, crushed by vehicle wheels, bruised by rocks, or damaged in any way during handling and installation;

d) that the cables are buried to the specified depth below finished grade and all other detailed requirements of the installation specification are accomplished;

e) that the cables do not directly cross each other and are separated by the required distances;

f) that screened material has been placed under and over the cables, and that rocks or pebbles do not contact the cables; and

g) that the cables have not been bent sharply where they enter (or leave) a conduit and are supported properly by tamped ground, so future settling cannot cause sharp bends.

15.5 CONSTANT CURRENT REGULATOR INSPECTION

Each constant current regulator should be inspected to ensure that porcelain bushings have not been cracked, no shipping damage has occurred, connections are correct, switches and relays operate freely and are not tied or blocked, fuses (if required) are correct and that the oil level of oil-filled regulators is correct. Only relay panel covers should be removed for this inspection. It is not necessary to open the main tank of oil-filled regulators. Information on the regulator inspection plate must be followed. All covers should be cleaned and tightly replaced after inspection and tests are completed.

15.6 LIGHT FIXTURE AND BEACON INSPECTION

An inspection should be made to determine that the colour, quantity and locations of lights are in accordance with the installation drawings. Each light should be inspected to determine that it is operable, that glass is not broken or cracked, that correct lamps are installed and that it has been properly levelled and aimed.

15.7 INSPECTION OF MISCELLANEOUS COMPONENTS

Components such as control panels, relay cabinets, panel boards, etc., should be visually inspected for damage, correct connections, proper fuse and circuit-breaker ratings, and compliance with the installation drawings.

15.8 SYSTEM OPERATION TEST

After components and circuits have been inspected, as indicated in the preceding paragraphs, the entire system should be tested as follows:

a) each switch of the lighting panels in the control tower should be operated so that each switch position is reached at least twice. During this process, all lights and vault equipment should be observed to determine that each switch properly controls the corresponding circuit;

b) the above test should be repeated using the panels in the alternate control station (vault) and then repeated again using the local control switches on the regulators; and

c) each lighting circuit should be tested by operating it continuously at maximum intensity for at least six hours. Visual inspection should be made at the beginning and at the end of this test to determine that the correct number of lights are operating at full intensity. Dimming of some or all of the lights in a circuit is an indication of ground faults. In addition, the lamp-terminal voltage should be measured on at least one light in each multiple circuit, to determine that it is within ±5 per cent of the rated lamp voltage as marked on the lamp.

15.9 ELECTRICAL TESTS OF SERIES-CIRCUIT EQUIPMENT

15.9.1 Electrical tests are helpful in determining that the quality of the installation is acceptable and that the performance will meet the operational requirements. Some of the tests involve the use and measurements of high-voltage circuits. These tests should be performed only by qualified persons who are familiar with high-voltage electrical equipment and the safety precautions which must be observed.

Electrical tests on cable

15.9.2 Cables directly buried in earth (that is, not in ducts) should be tested before and after the trench is backfilled. Each underground circuit shall be tested as follows.

15.9.3 Each series circuit should be tested for continuity by ohmmeter or equivalent method. The resistance of the circuit to ground should then be checked with a suitable test set to make sure it is free of grounds. Any faults indicated by these tests should be located and repaired before proceeding with high-voltage tests.

15.9.4 Before undertaking any work, the contractor should conduct insulation resistance tests on all circuits with which there will be an involvement, including other circuits within a duct, manhole or transformer housing, so as to establish a prior condition. The tests should be repeated after the work is concluded to confirm no adverse change has occurred. The contractor may also be required to do insulation resistance tests on installed circuits during the warranty period.

15.9.5 Each newly installed series circuit should be subjected to high-voltage tests to determine complete freedom from ground faults. Whenever possible, these tests should be performed when the ground is thoroughly wet because experience has shown that circuits which pass insulation resistance tests during dry weather may fail after a heavy rain. Each circuit, including connected transformers, should be tested as follows:

a) At the vault, disconnect both leads from the regulator output terminals. Support both leads so that air gaps of several inches exist between bare conductors and ground. Make sure that the cable sheath is clean and dry for a distance of at least 30 cm from the end of the cable. Also make sure that exposed insulation at each end of the cable is clean and dry.

b) Test each circuit immediately after installation according to the "First test for new circuits" values in Table 15-1. Test any circuit installed for sixty days or more, even if it has not been operated, according to the "Succeeding tests and old circuits" values.

c) Connect both conductors and apply the test voltage indicated below for a period of 5 minutes between conductors and ground.

d) When additions are made to old circuits, test only the new sections according to the "First test on new circuits" values. Test the complete circuit at the reduced voltages to ensure reliable operation.

e) The maximum acceptable leakage current, in microamperes, should not exceed the values calculated in 15.9.8.

Table 15-1. Insulation resistance test values for field circuits

	First test on new circuits	*Succeeding tests and old circuits*
Approach lighting (5 kV circuits)	9 000 volts	5 000 volts
Touchdown zone and centreline lighting (5 kV circuits)	9 000 volts	5 000 volts
HI runway edge light circuits, (5 kV circuits)	9 000 volts	5 000 volts
MI runway and taxiway (5 kV circuits)	6 000 volts	3 000 volts
600 volt circuits	1 800 volts	600 volts
HI – High intensity MI – Medium intensity		

15.9.6 The tests from Table 15-1 should be performed with a suitable high-voltage tester which has a steady, filtered DC output voltage. The high-voltage tester should contain an accurate voltmeter and microammeter for reading the voltage applied to the circuit and the insulation leakage current.

15.9.7 The tests should be supervised carefully by qualified personnel to ascertain that excessive voltages are not applied.

15.9.8 During the last minute of the high-voltage tests the insulation leakage current in microamperes for each complete circuit should be measured and should not exceed the value calculated for each circuit as follows:

a) allow 2 microamperes for each series transformer;

b) allow 1 microampere for each 100 m of cable (this value includes allowances for the normal number of connectors and splices.); and

c) add the values obtained to determine the total allowable microampere leakage for each complete circuit.

15.9.9 If the leakage current exceeds the value calculated as outlined above, the circuit should be sectionalized and the tests repeated for each section. Defective components must be located and repaired, or replaced until the entire circuit passes the test.

15.9.10 Make sure that the voltage test specified in 15.9.5 b) is actually applied to the circuit at the time the leakage current is measured. The voltage should be adjusted so the voltmeter reads the desired value before the leakage current is read. If any difficulty is encountered in obtaining the desired voltage, either the circuit being tested or the test set is defective and should be corrected before the test is continued.

15.9.11 On new circuits, an insulation resistance measurement should be made immediately after the circuit has passed the high-voltage tests with the test set used by aerodrome maintenance. This measurement reading then can be used during maintenance as a comparison with future readings to determine circuit conditions. Ambient temperatures and weather conditions should be recorded at the time of testing.

SAFETY NOTE: *After testing, always leave the cable under test short circuited for five to ten times as long as the test voltage was applied. The energy absorbed when current is applied is stored in the dielectric and will cause a voltage to appear across the cable after it has been disconnected from the high-voltage source, even if short circuited for a time.*

15.10 ELECTRICAL TESTS OF OTHER CABLES

Power cables rated 5 000 volts and more

15.10.1 Power cables should be tested as outlined using the methods in 015.9.5 except that cables rated at 5 000 volts should be tested at 10 000 volts and power cables rated above 5 000 volts should be tested at twice the cable voltage rating plus 1 000 volts. The test should be made between conductors and from conductors to ground with the cable's shield and armour grounded and for a period of not less than one minute after instrument readings have stabilized. The minimum acceptable resistance value is 50 megohms. Original insulation values of the cable have been substantially reduced to the specified 50 megohms in order to compensate for cable length, aging of conductor insulation and other factors, which may affect test results both before and during installation. Unless the cable length should appreciably exceed 3 000 m, no reduction in the specified insulation resistance should be considered. A test should be made for continuity of the cable's shield or armour. An ohmmeter type instrument may be used.

Note.— Insulation readings will be erroneous until the cable has been completely charged by the measuring instrument.

Secondary power cable rated 600 volts and below

15.10.2 Secondary power cables rated at 600 volts and below and used for lighting and power wiring should have a resistance of not less than 50 megohms between conductors and between conductors and ground when measurements are made at not less than 500 volts DC.

Control and telephone cable

15.10.3 After installation, these cables should comply with the requirements of Table 15-2.

Table 15-2. Post-installation requirements on the minimum number of conductors

Size cable	*Minimum number of acceptable conductors*
12 pairs or less	All
Over 12 pairs to 25 pairs, inclusive	All, except one pair
Over 25 pairs	All, except two pairs

15.10.4 Conductors that are found acceptable have been successfully tested as to continuity, freedom from short circuits and a minimum of 50 megohms resistance between conductors, and from each conductor to grounded shield, when tested at not less than 500 volts DC.

Coaxial cables

15.10.5 Radio frequency cables should be tested for insulation and loop resistance prior to installation and the results recorded. The insulation test should be made between the centre conductor and shield with a 500-volt DC instrument. The loop resistance test should be also made as above but with the centre conductors shorted to the shield at the far end of the cable. This test may be made with a bridge, ohmmeter or other suitable instrument. After installation, the conductor-to-shield and conductor-to-ground resistances should exceed 50 megohms when measured at 500 volts DC. Loop resistance should be within plus or minus 10 per cent of the measured values prior to installation, e.g. measured resistance per 1 000 metres of cable on reel, multiplied by each 1 000 metres and fraction thereof of installed cable. Shield-to-ground resistance should also be measured and the results recorded.

Coaxial cable, pressurized

15.10.6 Upon completion of the cable installation, the following test should be made:

a) *Electrical test.* A high-voltage insulation tester with microammeter current-leakage meter should be used and 3 000 volt DC applied between the inner and outer conductors for a minimum period of three minutes. While this voltage is applied no noticeable current should flow between the conductors after charging current has stabilized.

b) *Nitrogen gas test.* Nitrogen gas at the specified pressure should be applied to the cable, the gas valve closed, and ambient temperature recorded. Six successive, hourly measurements of pressure should be taken and recorded. After the sixth measurement is taken and after a time interval of about 24 hours, a seventh measurement should be made. If variations in gas pressure are due only to changes in ambient temperature, the length of cable is acceptable. A temperature correction factor of 0.017 per degree Celsius should be used.

15.11 ELECTRICAL TESTS OF REGULATORS

15.11.1 The supply voltage and the input tap of the regulator should be checked to see that they correspond.

15.11.2 With the load disconnected, energize the regulator once, and watch the open circuit protector to see that it de-energizes the regulator within 2 or 3 seconds:

a) Connect the load circuit after it has been checked for opens and ground, as required in Chapter 8, and inspected to see that all transformers are properly lamped.

b) Obtain a voltmeter and an ammeter with an error of not more than ±1 per cent of full scale and simultaneously measure input voltage and output current (connect the ammeter to the terminals of an isolating transformer inserted into the output circuit of the regulator) for each intensity setting tap.

c) Use a recording voltmeter or take readings during both day and night at sufficient intervals to obtain an average supply voltage.

d) If the regulator has input voltage taps, select the tap which most nearly corresponds to average supply voltage. The output current for each intensity setting tap should be within ±2 per cent of the nameplate values after any necessary supply voltage correction is made.

15.11.3 In all current regulators which have input voltage taps, the output current will vary in proportion to input voltage changes. If a supply voltage of 2 350 volts is applied to the 2 400 volt tap, the output current values should be 2 per cent below the nameplate values.

15.11.4 Regulators which have automatic supply voltage correction in lieu of input taps do not change the output current as the supply voltage varies:

a) If the output current on full intensity deviates from the nameplate value by more than 2 per cent (and if the regulator is not overloaded), the internal adjustment should be checked, as described on the regulator instruction plate. Since the adjustment may be delicate, it is recommended that a deviation of ±5 per cent be allowed on lower settings before attempting to re-adjust the regulator.

b) Furthermore, a check should be made to see whether the adjustment had been changed purposely for an unusual local flight operational requirement.

15.12 ELECTRICAL TESTS OF OTHER EQUIPMENT

Measure the input and output voltages and currents and determine the loads of the connected circuits. Check to determine if these voltages and loads are within the manufacturer's rating of the equipment. Record these measurements for future reference during maintenance or for modification of the circuit.

15.13 TESTS OF MONITORING SYSTEM

After the tests listed above have been completed and the lighting is functioning as designed, the monitoring systems should be tested by simulating such failures as open circuits, short circuits, grounds, failure of lights, loss of power in both the lighting circuits and the control circuits, and observing the performance of the monitor. Inability to detect failures should be rectified before the overall system is accepted.

Chapter 16

TROUBLESHOOTING PROCEDURES

16.1 GENERAL

This chapter contains general troubleshooting procedures for isolating a fault in all types of airport series lighting circuits. Two procedures are actual tests for when you have the CCR energized. The final two describe test methods using some specific equipment.

16.2 SAFETY

16.2.1 Considerations of safety are of primary importance for working on airfield lighting, especially of the series-circuit type:

a) Troubleshooting tests contained in this chapter may involve voltages that are dangerous. Safety precautions must be exercised for the protection of personnel and property.

b) Personnel performing the testing and troubleshooting procedures must be experienced in high-voltage techniques and must be adequately supervised. All maintenance personnel should be thoroughly trained in emergency procedures for treatment of electrical shock.

Note.— Troubleshooting procedures that are intended to be carried out should be checked for accordance with local rules of safety.

16.2.2 Most airport visual aid equipment is exposed to weather and may develop electrical shock hazards through damage from lightning or electrical cable insulation deterioration from exposure. Begin maintenance procedures only after a visual inspection is made for possible hazards. Due to the hazards associated with lightning, lighted navigational aids should not be serviced during periods of local thunderstorm activity. Each airport should develop and implement procedures to be followed in the event of an accident. Precious seconds are saved rendering medical assistance to injured personnel when action plans are already in place. Rehearse and review action plans regularly.

16.3 INITIAL FAULT INVESTIGATION

16.3.1 Series circuits are subject to two primary types of malfunctions, shorts to ground or opens:

a) Keep in mind that an airfield lighting series circuit powered by a constant current regulator is an ungrounded system. Therefore, the circuit and CCR will function normally with one ground on the circuit.

b) It is only when two or more grounds appear and a “short circuit” path is created that the current begins to flow through the earth, around the lighting load, and a section of lights appears out. In the case of an open in the primary field circuit, no current can flow and the entire circuit goes out.

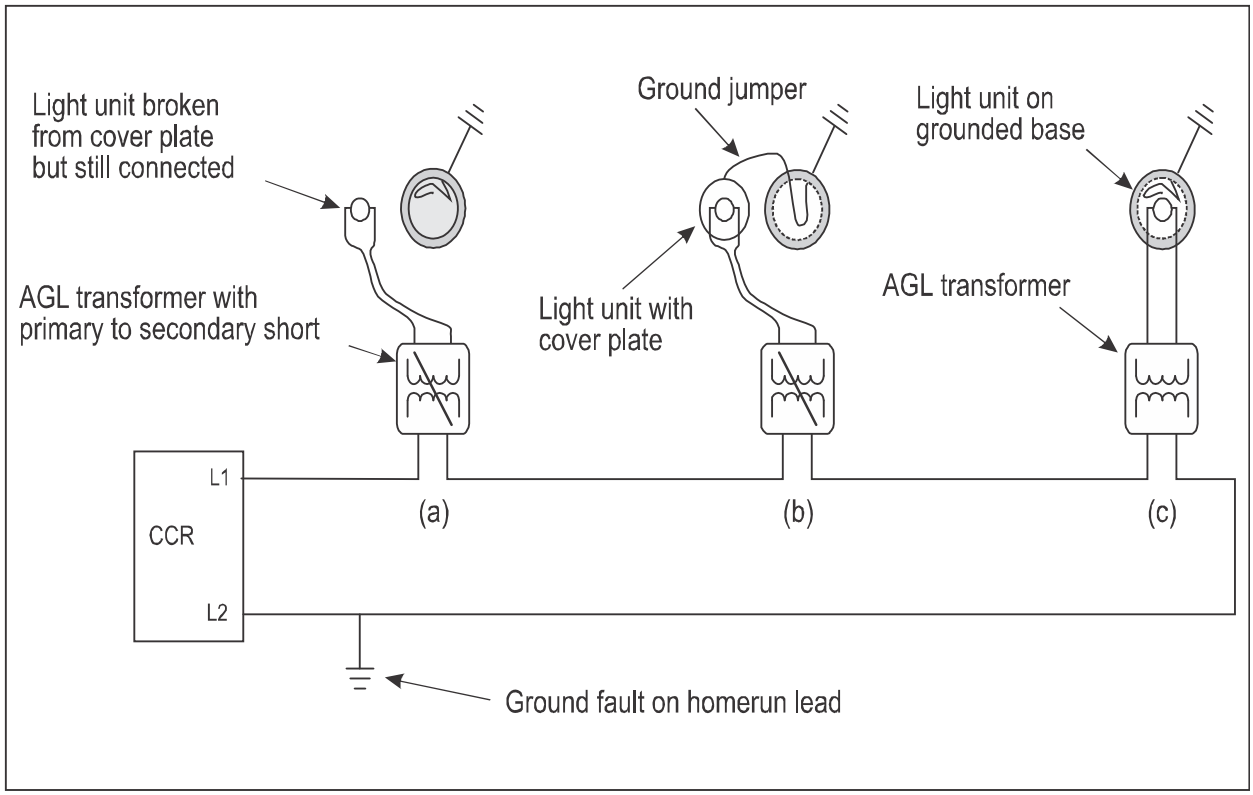

Figure 16-1. Dangerous isolation transformer/circuit ground faults

16.3.2 In addition to faults in the circuit, there may be a shorting failure across the windings of the AGL transformer. Remember that even though these transformers are often referred to as isolation transformers, they are not intended to provide isolation for personnel protection. A shorted transformer may not cause a circuit malfunction and could remain unnoticed in normal operation with a primary voltage on the secondary side.

16.3.3 This condition of a shorted transformer is especially dangerous when working with inset lights and removing them from the light base whilst the circuit is energized. As soon as the fixture is unbolted and lifted from the base, the electrician becomes a low-resistance path to ground. The design should include a ground jumper, as shown in Figure 16-1 which alleviates this hazard by connecting the bottom of the light fixture to the ground lug on the inside of the base. If the light fixture is lifted free of the base, as shown in Figure 16-1 (b), the jumper continues the grounding. However, you cannot know if the wire is truly connected until you remove the fixture, at which time it is too late. Also note that if an elevated light fixture is broken off its mounting, yet still connected, as shown in Figure 16-1 (a), the protection is not available if the fixture is picked up. Always wear insulated gloves.

16.3.4 Grounding one end of the secondary winding substantially reduces the hazard for elevated lights that are broken and free of their mounting but again this is dependent upon whether the grounding is truly connected. It is best to remain on the side of caution and de-energize the circuit before re-lamping or removing the fixture. Similarly, one should not pick up knocked-over elevated fixtures when the circuit is energized.

16.3.5 Constant current regulators larger than 10 kW are required to have open circuit protection that will shut the CCR down within two seconds after current flow has been interrupted. Most manufacturers, however, provide this protection on all their CCRs. When in doubt, check your CCR's operating manual. Open circuits can exist in conjunction with grounds and if the CCR can develop enough voltage to overcome whatever resistance exists in the circuit, it will establish current flow and continue operating.

16.3.6 In most instances, we learn of a malfunctioning lighting circuit from a report made by the control tower or through an operations report. Sometimes it is noticed by an electrician making a routine daily runway inspection or light check. Either way, the observation is that of a section of lights out or an entire circuit not functioning:

a) The first step in an initial fault investigation is to make a quick visual inspection of the affected lighting on the airfield. This will provide information as to whether an entire circuit is out or just a portion of the lighting on a specific circuit is affected. This gives an electrician a good idea as to the possible cause of the malfunction.

b) If an entire circuit is out, the problem could be an open circuit in the field wiring or a malfunctioning CCR. If only a portion of the lights on a circuit is out, the problem is most likely due to a short to ground at each end of the affected section. Keep in mind that if the malfunction is due to a short to ground in the field circuit, the longer the circuit remains energized, the more damage will result at the location of the ground faults due to arcing.

16.3.7 In the vault, once the exact malfunctioning circuit has been determined, the regulator supplying the circuit can be located. Turn the regulator local control to the "OFF" position and shut down and lock out the power supply to the regulator. If a cut-out is present, disconnect the cut-out and separate the blades of the cut-out switch on the field side of the switch. This will allow you to check both the continuity and insulation resistance in the field circuit. After separating the ends of the field circuit or disconnecting at least one end of the field circuit from the regulator, prepare to take a measurement for continuity in the circuit.

16.3.8 The regulator may be provided with a load disconnect and test (LDT) isolator. Replacing the "Circuit in service" plate with the "Circuit in test" plate will cause the output terminals of the regulator to be short circuited and disconnected from the field circuit.

16.3.9 If using a volt-ohm-milliammeter (VOM), the first step is to set the meter to the R x 1 scale and "zero" the meter (if using a digital multimeter (DMM), these steps are not necessary). This is accomplished by setting the meter to the desired scale (R x 1 in this case) and touching the two meter leads together. Make sure the leads are plugged into the correct sockets in the meter (on most VOMs, this is the + and common sockets) and adjust the "zero ohms" knob until the meter needle is at the zero point (usually on the right side of the meter scale). After this adjustment has been made, take a reading of the resistance in the field circuit by checking between the two separated conductors of the field circuit.

a) If no continuity can be read in the circuit, check for a short to ground in each side of the circuit and then proceed to section 16-5 *Locating open circuit faults.*

b) If the circuit shows continuity (a measurable amount of resistance), normally between 20 to 70 ohms, the circuit is not open.

c) If a much higher resistance is measured (1 000 ohms +), then a high resistance open circuit fault has occurred. Many times this is indicative of a transformer with a faulty primary winding that has not completely burned open yet. It could also be due to a cut cable which has both ends in contact with the earth.

16.3.10 If the resistance in the loop circuit is normal, proceed to check the resistance to ground from each end of the circuit to ground.

a) If any resistance can be read to ground with the meter set at R x 1, then one or more low resistance shorts to ground exist and troubleshooting procedures are moved to the field.

b) If the meter reads no continuity (no meter movement) when the circuit is checked to ground, set the meter for the R x 100 and R x 10 000 scales respectively and, after zeroing the meter, check for a short to ground on these two scales. Remember that the positive (red) lead should always be connected to the circuit or conductor under test and the negative (black) lead should be connected to ground. Also be aware that on the R x 10 000 scale, merely touching the meter leads with your fingers will produce a reading. Most ground faults serious enough to cause the lights to go out will be reading less than 1 000 ohms to ground, usually less than 100 ohms to ground and will be easily indicated on the R x 1 scale.

c) If no ground fault is detected on the circuit with the VOM or DMM, use an insulation resistance tester to test the circuit. Insulation resistance testers operate at much higher voltages, 500 to 5 000 volts, and are more useful in locating a high resistance ground fault.

16.3.11 If no problems are detected in the field circuit, the next step is to try to energize the CCR using the manual control on the front of the CCR:

a) After reconnecting the field circuit to the CCR, or reinstalling the cut-out and turning the primary power back on to the regulator, begin by putting the switch in the step 1 position and note if the CCR comes on.

b) If the regulator does not come on, the problem may be as simple as a tripped breaker or blown fuse and you should proceed to check for proper input voltage to the CCR.

c) If the CCR energizes for about 2 seconds and then shuts off, the fault is likely a malfunction of the open circuit or over-current protection circuitry in the CCR.

d) If the field circuit appears normal, disconnect and lock out the primary power source to the CCR, perform a short circuit test by shorting the output of the regulator with a wire of sufficient ampacity (e.g. 6 mm^2 or #10 AWG), and test the operation of the regulator again.

e) If the regulator still shuts off after a few seconds, there is an internal problem with the regulator or its controls. Consult the operation and maintenance manual for the CCR for specific troubleshooting instructions.

16.3.12 If the CCR remains on and appears to be operating normally on the lowest brightness setting, continue switching the CCR up through the brightness steps while noting the increase in current output on the meter until the maximum brightness is reached, either step 3 or step 5 depending on the style of the regulator. If the regulator has a normal output on the lower steps, but the output is low on the highest step, the regulator may be overloaded or there may be too much inductance in the field circuit.

16.3.13 Perform a short circuit test of the regulator by turning the regulator off and disconnecting and locking out the primary power to the regulator. Then connect a 6 mm^2 (#10 AWG) wire across the output and re-energize the regulator. If the regulator operates normally with the output shorted, this would indicate an overload is present in the field circuit. If there have been no additional loads added to the field circuit, check for burnt out lamps or otherwise open secondary connections on the field transformers. Newer regulators are required to withstand up to 30 per cent open circuited AGL transformers. Older regulators may only tolerate 10 per cent. When a large number of open circuited

transformers exist on the output of a regulator, it increases the inductive loading on the regulator and will cause the regulator to act abnormally and many times appear overloaded. One cause of this condition may be a lightning strike that has blown out a large number of lamps in the circuit.

16.4 LOCATING GROUND FAULTS IN THE FIELD

16.4.1 Once it has been established that the circuit is shorted to ground, the troubleshooting procedures can be moved to the field. Keep in mind that if there is a section of lights out on the circuit, there will ALWAYS be at least two shorts or ground faults in the circuit.

Note.— The description is simplified to a lighting system having only one circuit. If the system is interleaved with two circuits, the malfunction section will have every second light out or dimmed.

a) At this time the circuit may be energized and a visual inspection can be made to try to locate the faults. If the circuit is a simple loop configuration, a visual inspection can sometimes be an effective means to find the problem.

b) It is best to have someone at the vault with a radio so that as soon as the good to bad transition areas in the circuit are located, word can be sent to the vault to shut off the regulator and lock it out so that repairs can be made.

c) Drive along the circuit looking for any section of lights that are out or appear to be extremely dim and mark this area by putting a surveyor's flag or a paint mark at the locations of the last light burning and the first light out, as shown in Figure 16-2. After the circuit has been de-energized and locked-out, check the lights at each end of these "transition areas" for burned transformers, connectors, etc.

d) Always remember that there will be at least two shorts in the circuit and both must be repaired. In some instances, especially in the case of direct-buried cables or when the circuit has been energized for a long period of time while ground faults are present, more than two shorts to ground may have occurred.

16.4.2 The best method for finding ground faults after the initial visual inspection has been made is to locate them using the VOM.

a) Leave the ends of the circuit separated at the vault and suspend the ends of the cables in free air if disconnected from the cut-out or other connection.

b) Refer to as-built plans if available to locate the centre of the circuit and break the circuit at that point by disconnecting the cable at one side of the transformer (Figure 16-3 refers).

c) Take a reading to ground in both directions from this point and determine which way the fault is located. It is entirely possible that the meter may indicate a fault in both directions from this point or only in one direction as there may be two or more faults in the same section of cable.

d) Leaving this connection open (if possible), proceed to a point in the circuit approximately halfway between the midpoint and the vault in the direction of the fault and break the circuit again. As before, take a reading on the circuit in each direction to determine the location of the fault. Continue until each fault is located and corrected.

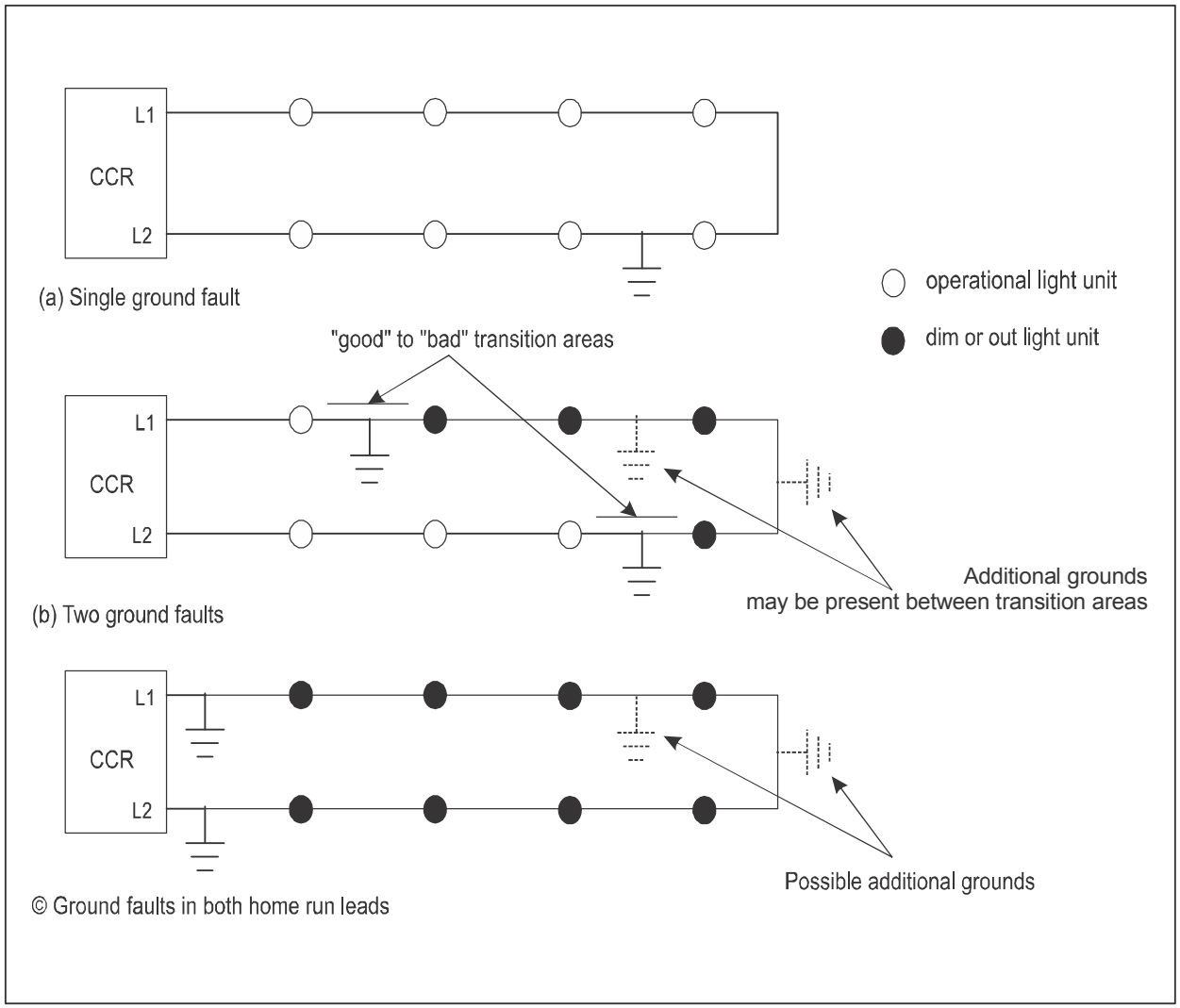

Figure 16-2. Typical ground faults

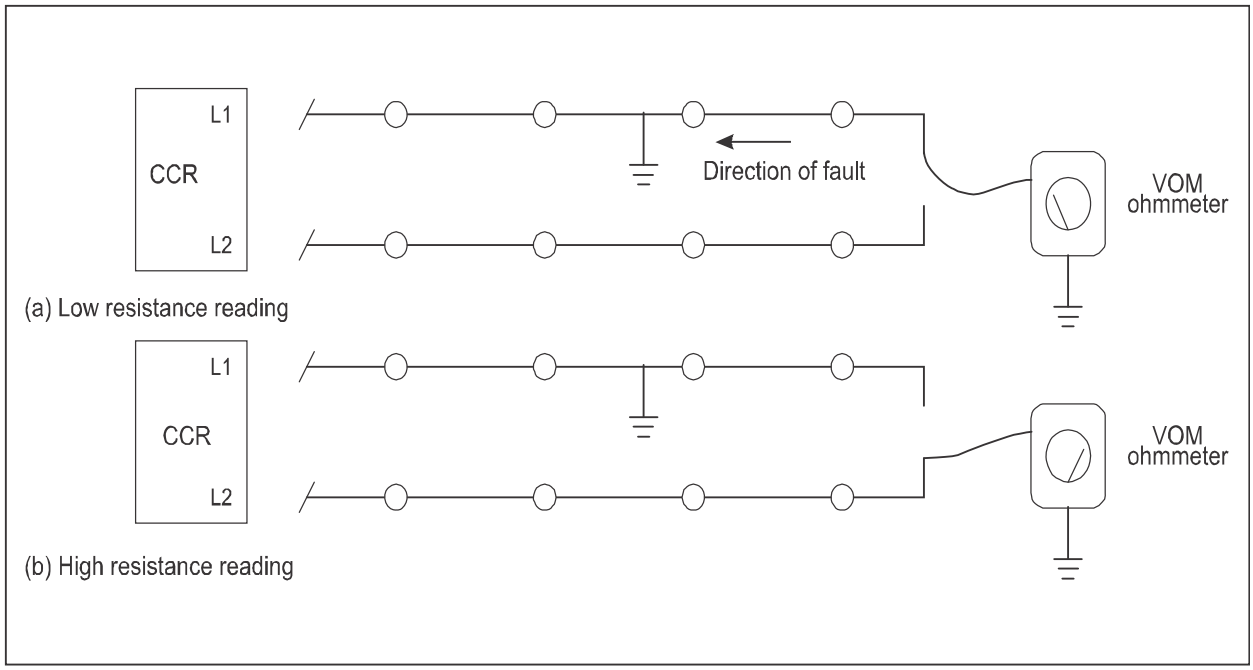

Figure 16-3. Locating ground faults with the VOM

16.4.3 During the course of troubleshooting, when you remove a transformer from the base or the ground if direct buried, you may find that the fault seems to disappear. When this happens the fault is located at that transformer; normally you can visually see the burned transformer. However, in the case of an internal primary to secondary short in the transformer, there may not be anything readily apparent. Look at the fixture attached to the transformer and check to see if the socket or secondary plug is burned. This is usually a good sign of a primary to secondary short. A short of this nature can be confirmed by touching one lead of the VOM to one of the primary leads of the transformer and touching the other to one of the sockets on the secondary connector. If the transformer is shorted, continuity will be indicated on the meter. Sometimes checking between one of the primary connectors and the outside body of the transformer will indicate a transformer with a significant leak to ground. This can be performed with an insulation resistance tester for better results. If checking the insulation integrity of transformers, you can also submerge the transformer in a bucket of water and connect the positive lead of the resistance tester to one of the primary leads and the negative lead to a bare wire dropped into the bucket. If any leakage is shown, the transformer is suspect or bad depending on the reading. Reasonably new transformers should read over 1 000 megohms, with readings decreasing with age (see Figure 16-4).

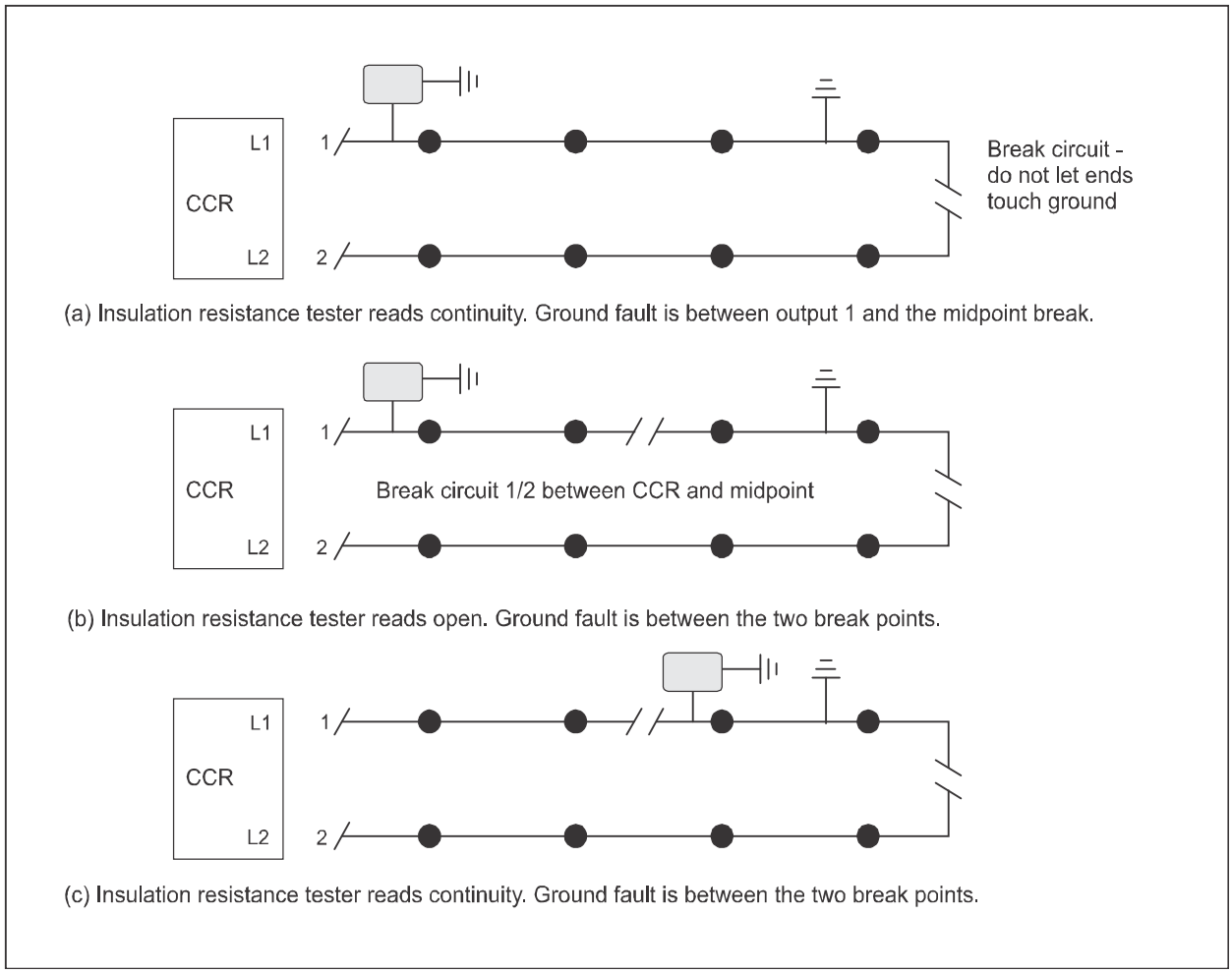

Figure 16-4. Alternative method using VOM or insulation resistance tester

16.5 LOCATING OPEN CIRCUIT FAULTS

16.5.1 Open circuits can be successfully located using similar tactics as those used for locating short circuits or ground faults. If the circuit appears to be grounded in conjunction with an open, the troubleshooting procedure used for finding ground faults may be used since the open and ground will likely be located at the same place. Many times a cable will burn in two if left operating after a short to ground has developed. If the initial fault investigation has revealed an open in the field circuit and the circuit does not appear to be grounded, de-energize the regulator and lock out the regulator power supply and proceed to the field and locate the approximate centre of the circuit.

TIP: When an open circuit is indicated, it is more than likely to be located where there is recent excavation activity.

16.5.2 For this type of troubleshooting where you are looking for continuity, it is helpful to have the ends of the circuit connected together at the vault via the cut-out or some other means as shown in Figure 16-5. That way, when the problem is corrected, it can be verified by being able to read a loop from any point in the circuit.

a) Proceed to the approximate midpoint of the circuit and disconnect the circuit at the transformer and ground the circuit in both directions. Check for continuity to ground at another point in the circuit by disconnecting the transformer.

b) If the circuit is connected together at the vault and you have only one open in the circuit, you should read continuity in one direction but not the other back to the grounded midpoint of the circuit.

c) When the grounded conductor is identified, have someone at the midpoint connection make and break the connection to ground in one direction and then the other until you have established which section of the circuit is open.

d) Then proceed to a point halfway between your present location and the grounded midpoint in the section of the cable that is open and take another reading. If this time you can read to ground in the direction of the midpoint of the circuit, then you know that the open is behind you or between you and the last point you tested. By moving the intentional ground point and looking for continuity in each section of the circuit, the open(s) can be quickly located.

16.6 INTERCONNECTED CIRCUIT FAULTS

16.6.1 It is common for airfields with multiple circuits to experience interconnecting faults. There are two main types of interconnecting faults. The first occurs when two or more circuits contain grounds and/or opens in a manner that electrically connects the circuits together. The second type occurs when two or more circuits do not contain any faults but become capacitively coupled together.

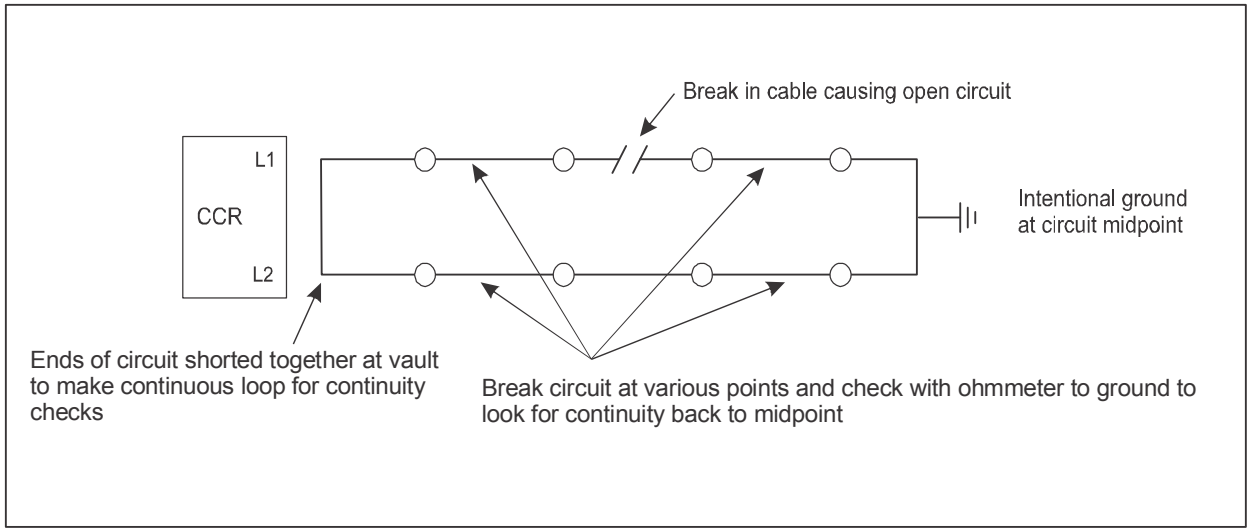

Figure 16-5. Locating open circuit faults

16.6.2 When multiple circuits contain faults that connect them together, a section of primary cable is common to all circuits involved, as shown in Figure 16-6 and Figure 16-7. Multiple ground faults are the most common cause of this problem. A continuity check between the suspected circuits will confirm if they are electrically connected. To troubleshoot this condition, disconnect and isolate the output leads of regulator *B* then locate the circuit fault on regulator *A* circuit. This will usually locate the common fault area of both circuits.

16.6.3 Figure 16-7 illustrates what may happen when there are two load-to-load shorts on the circuits. Notice that the lights in this condition are affected, causing the area between the two shorts to dim on both circuits since the current is divided. If the illuminated lights on the *B* load were to go unnoticed, the presence of this condition could easily be confused with symptoms of two grounds on a single circuit. The give-away is the portion of the *B* load lights that are on. Driving the circuit would locate the bright/dim transitions and the location of the shorts. Had the load between the shorts of load *A* been much larger (more lights) than the load in between the shorts of load *B*, the smaller load would have been brighter. In the illustration, the loads between the shorts are equal and the current is divided equally between the two loads.

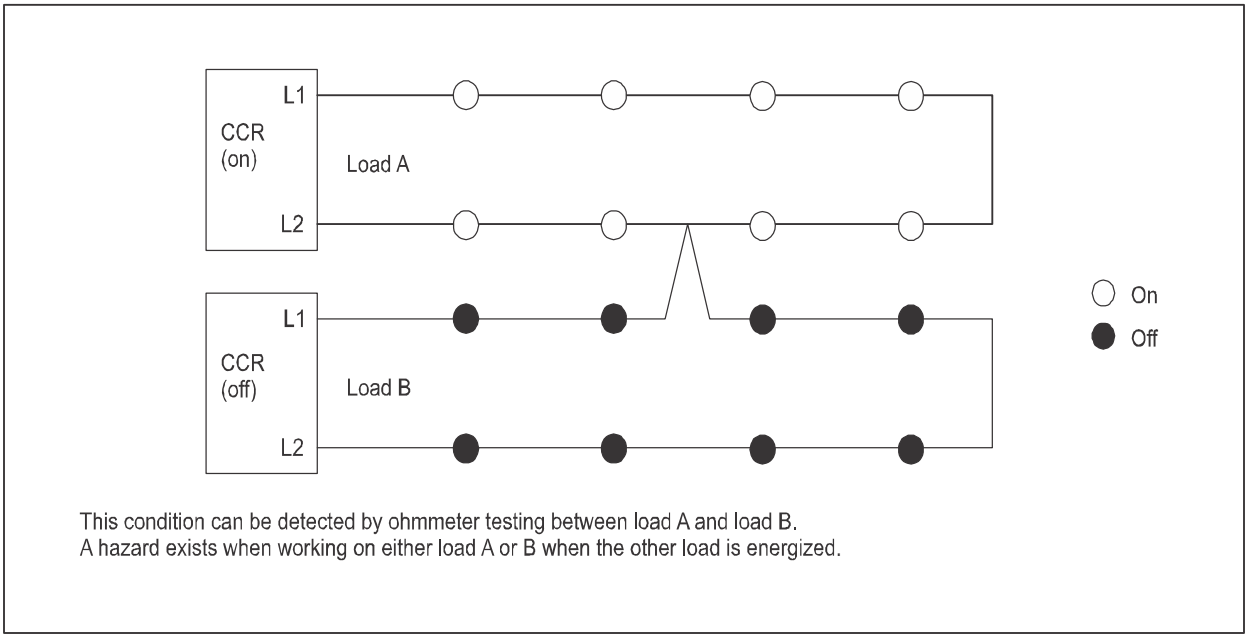

Figure 16-6. Single load-to-load fault

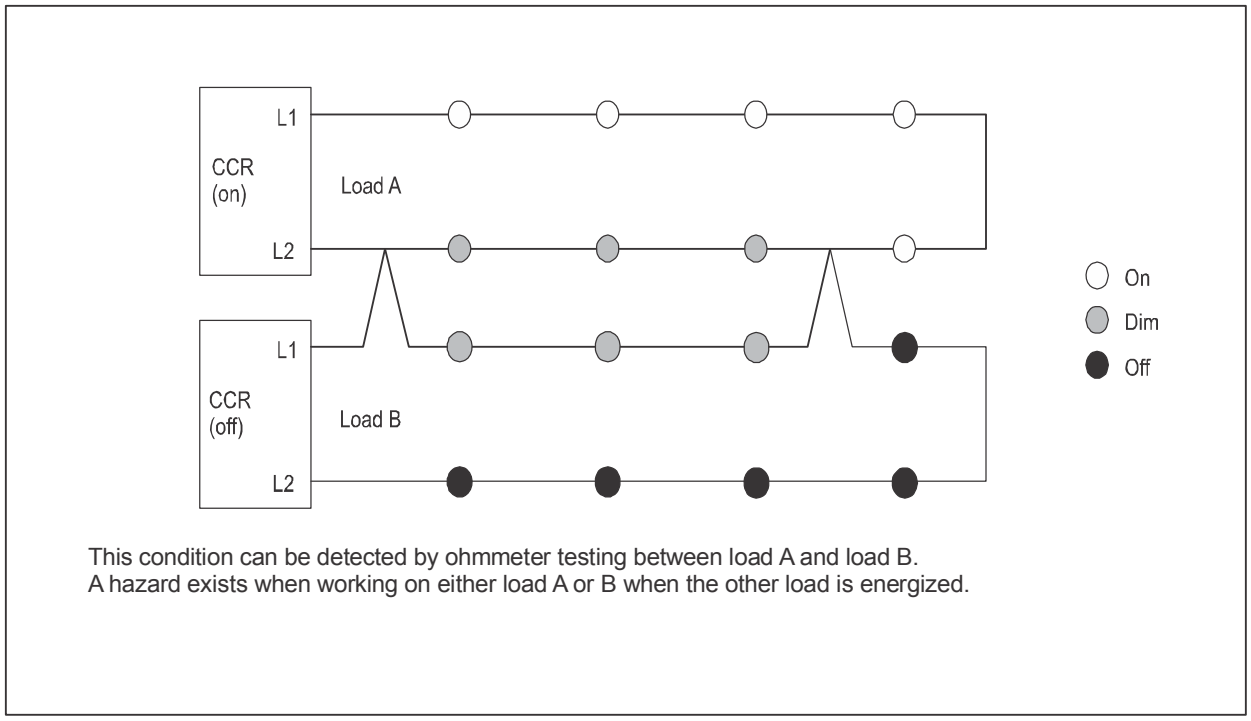

Figure 16-7. Two load-to-load shorts

16.6.4 A capacitive coupling fault occurs when two or more series circuits run parallel and in close proximity to each other. This situation becomes a problem if the circuits have monitors on them because the induced currents can simulate field faults. A continuity check between the suspect circuits confirms they are not electrically connected together. To correct a capacitive coupling fault, simply swap the output leads of one of the regulators involved. This will cancel the capacitive coupling effect.

WARNING

Note 1.— The troubleshooting methods and procedures outlined in the following paragraphs involve dangerous voltages and should only be attempted by qualified personnel using appropriate safety procedures. Also, while sometimes helpful or necessary, be aware that this method is by its nature "destructive testing" and, if performed indiscriminately, can result in more damage occurring in the field circuit.

Note 2.— The following troubleshooting method is best described as "destructive testing". This method can be used when either time constraints or difficulty testing using an ohmmeter or insulation resistance tester makes traditional troubleshooting impractical. One such instance might be in the case of direct-buried circuits where traditional troubleshooting is difficult and time-consuming due to having to dig up each connection to perform the testing. Another case when this type of troubleshooting might be considered is when a runway circuit is out of service, and time is of the essence due to disrupting air traffic operations at the facility. This method does require that the circuit have a significantly low resistance to ground at the point of the fault, preferably less than 1 000 ohms to ground, the less the better. It should also be noted that small regulators (10 kW or less) may not develop sufficient voltage to be effective.

16.7 INTENTIONAL GROUND TEST

Note 1.— WARNING! The troubleshooting methods and procedures outlined in the following paragraphs involve dangerous voltages and should only be attempted by qualified personnel using appropriate safety procedures. Also, while sometimes helpful or necessary, be aware that this method is by its nature "destructive testing" and, if performed indiscriminately, can result in more damage occurring in the field circuit.

Note 2.— The following troubleshooting method is best described as "destructive testing". This method can be used when either time constraints or difficulty testing using an ohmmeter or insulation resistance tester makes traditional troubleshooting impractical. One such instance might be in the case of direct-buried circuits where traditional troubleshooting is difficult and time-consuming due to having to dig up each connection to perform testing. Another case when this type of troubleshooting might be considered is when a runway circuit is out of service, and time is of the essence due to disrupting air traffic operations at the facility. This method does require that the circuit have a significantly low resistance to ground at the point of the fault, preferably less than 1 000 ohms to ground, the less the better. It should also be noted that small regulators (10 kW or less) may not develop sufficient voltage to be effective.

16.7.1 The intentional ground test is another method used to find a single ground fault, as shown in Schematics (a) and (b) of Figure 16-8. If an insulation resistance test indicates a ground in the circuit, but a visual inspection is inconclusive, this test method will help locate the problem.

a) First, shut off and lock out the regulator. Next, label the two regulator output leads "L1" and "L2".

b) Connect a 45-watt AGL transformer and light fixture between regulator output "L1" and ground as shown in Figure 16-8. The ground resistance of the test connection must be very small. Next, energize the regulator. Keep away from the test setup. If the test lamp illuminates, there is at least one ground fault on the circuit. The brighter the test lamp glows, the lower the resistance of the ground fault(s). With the regulator energized, conduct a visual inspection of the circuit.

c) If there is a section of dim or out light fixtures, a ground fault exists between the last light operating properly and the first dim or out light. Mark this area.

d) If all the lights are dim or out, the ground fault is between output "L2" and the first light fixture on that side of the circuit.

e) If all the lights appear to be correct, the ground fault is between output "L1" and the first light fixture on that side of the circuit.

f) De-energize and lock out the regulator. Switch the test transformer/light assembly from output "L1" to output "L2" (Figure 16-8 refers). Energize the regulator. The test lamp should illuminate. Conduct a visual inspection of the circuit.

g) If there is a section of dim or out light fixtures, and the location of the "good to bad" lights is in the same spot as marked in c), the circuit has a single ground fault at that location. (The transition area is the same, but the lights that were on in c) should now be off and the lights that were off in c) should now be on.) De-energize and lock out the regulator. Check the connector kits, cable splices, etc., between the two adjacent light fixtures of the marked area and repair or replace suspected faults as necessary. At this point a VOM or insulation resistance tester may be used to verify faulty transformers, etc. Once the single ground fault is cleared, the test lamp will not illuminate when the regulator is energized. Remember, stay away from the primary cable while the regulator is on.

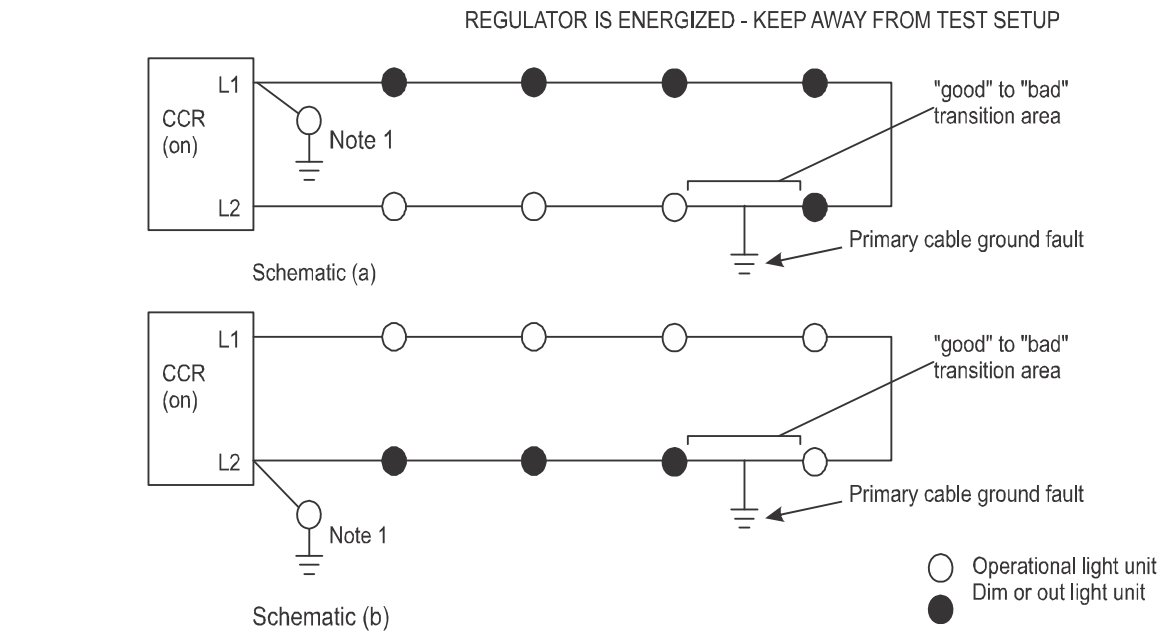

(1) 45 watt AGL transformer and light unit connected between a regulator output terminal and earth ground. The ground resistance of the earth ground connection must be low.

(2) When the circuit contains a single ground fault, the "good" to "bad" transition area will be in the same location with the test connection on either output L1 or L2.

Figure 16-8. Intentional ground test

h) If there is a section of dim or out light fixtures and the location of the “good to bad” lights is **not** in the same spot as marked in c) above, there are at least two ground faults on the circuit. Mark this new transition area. De-energize and lock out the regulator. Check the connector kits, cable, transformer, etc., between the two adjacent light fixtures of the newly marked area and repair or replace suspected faults as necessary. As each fault is cleared, energize the regulator and perform a visual inspection of the circuit. Keep away from the energized primary cable and always lock out the regulator when handling the cable. The “good to bad” transition area should move toward the spot marked in c). Continue troubleshooting the faults in this manner until the last ground is repaired and the test lamp does not illuminate when the regulator is energized.

i) If all the lights appear to be operating correctly, the ground is between output “L2” and the first light on that side of the circuit, the same as found in d). De-energize and lock out the regulator. Work from the light fixture towards output “L2.” Check the cable, connector kits, splices, etc., and repair or replace suspected faults as necessary. The ground fault has been fixed when the test lamp does not illuminate when the regulator is energized.

j) If all the lights are dim or out, the ground fault is between output “L1” and the first light fixture on that side of the circuit, the same as found in e). De-energize and lock out the regulator. Work from the light fixture towards output “L1”. Check the cable, connector kits, splices, etc., and repair or replace suspected faults as necessary. The ground fault has been fixed when the light fixtures operate properly and the test lamp does not illuminate when the regulator is energized. Remove the fault marker(s) from the field.

16.7.2 If a resistance tester is not available, the intentional ground test can be modified to become a valuable preventive maintenance tool as shown in Figure 16-9. Connect the transformer/light assembly to the regulator output through a cut-out. When the cut-out handle is removed, the intentional ground is connected to the circuit. Once a month, shut off the regulator and pull the cut-out handle out. Energize the regulator to the high step and observe the test lamp. If the circuit has developed a ground fault, the lamp will illuminate. The lower the resistance of the fault, the brighter the lamp will glow. The main advantage of performing this check regularly is that a single ground fault can be detected and located easily, before multiple faults affect the visual appearance of the circuit. The general rule of thumb is, if the test lamp glows, the ground needs to be located and repaired. Add this procedure to your preventive maintenance routine and you will always stay one step ahead of grounding troubles.

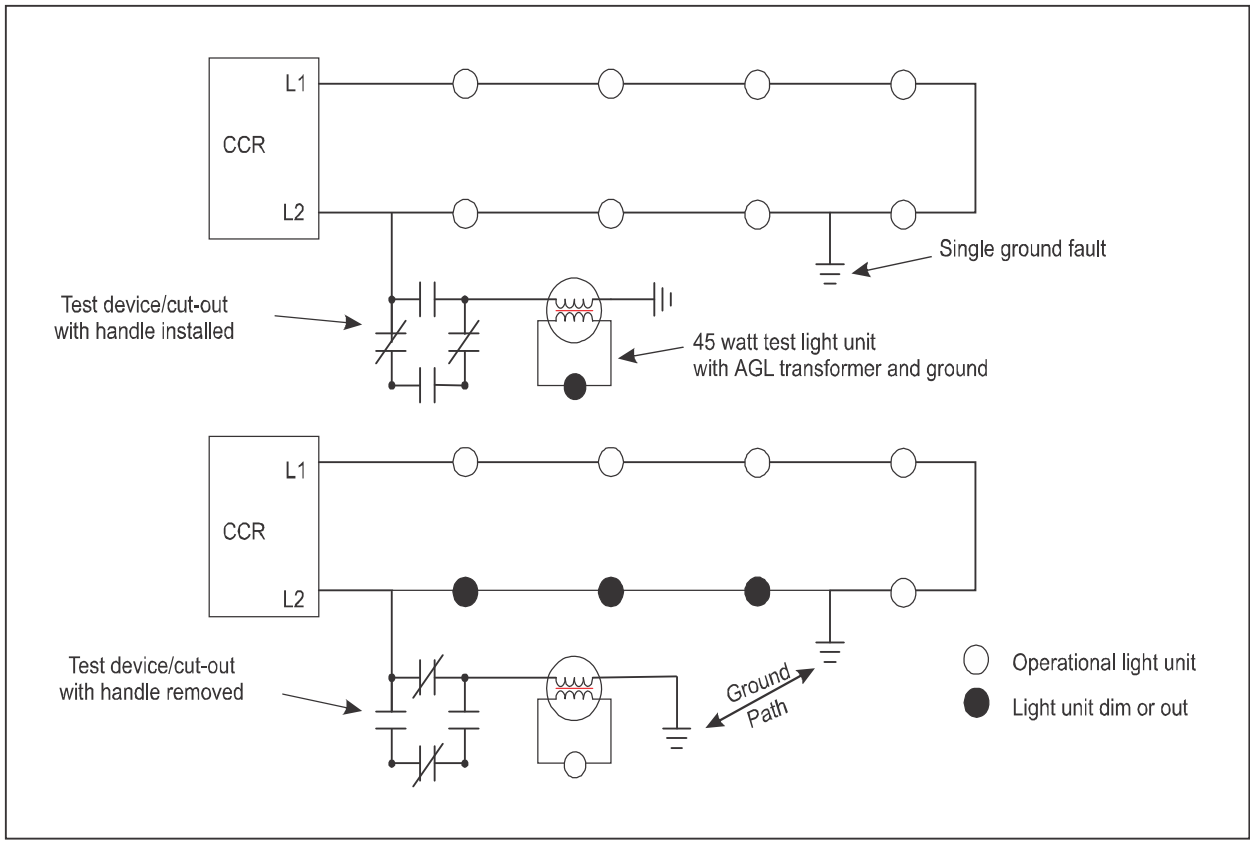

Figure 16-9. Intentional ground preventive maintenance tool

16.8 GROUNDED OUTPUT TEST FOR LOCATING OPEN CIRCUITS

16.8.1 The grounded output test is similar to the intentional ground test used to locate ground faults. In order for this test to work, the open fault needs to be grounded, as shown in Figure 16-10. If the open fault is not grounded or the ground resistance of the fault is too great, this method may only work with large kW rated regulators. Make sure the regulator is off. Mark the regulator leads “L1” and “L2”. Remove lead “L1” from the regulator. Cap or tape the bare end of lead “L1”. Make sure it does not touch anything, and stay away from it when the regulator is energized. Next, connect the regulator output terminal, from which “L1” was removed, to earth ground. Once again, the ground resistance of this connection must be as low as possible. Energize the regulator to the highest step. Stay away from the test connection to ground.

16.8.2 If the regulator trips off on open circuit protection, do not attempt to energize the regulator a second time. Either the regulator is too small or the ground resistance of the fault is too large. In most cases, 4 and 7.5 kW regulators do not have enough power to drive a grounded output test that has any ground resistance at the fault location. Ideally, the best regulator to use would be a 30 kW for 6.6 ampere circuits, and a 70 kW for 20 ampere circuits. If possible, connect the circuit to the largest regulator in the vault and try again. If the circuit cannot be turned on, troubleshoot the open circuit fault with the ohmmeter/megaohm test (section 16.5 refers)

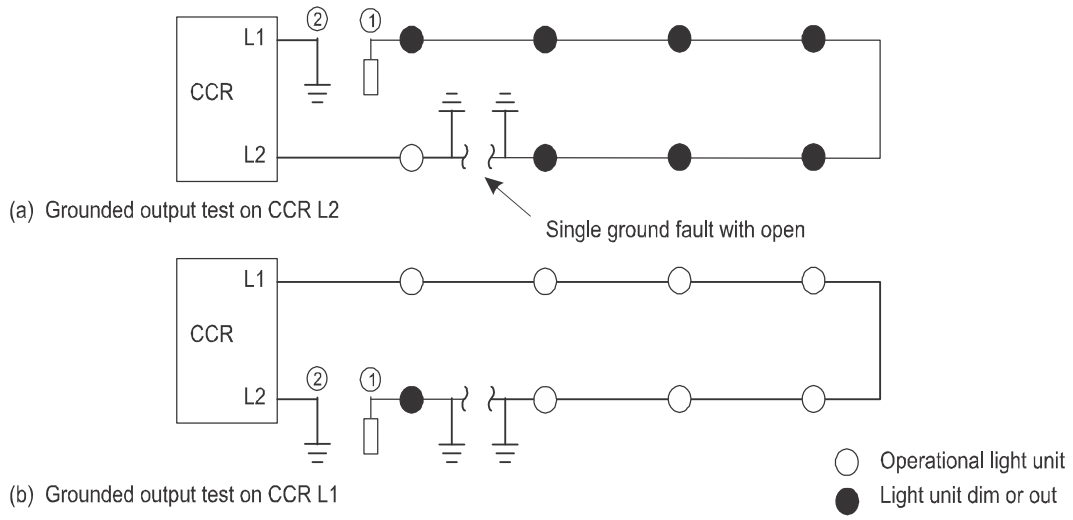

(1) Insulate and stay clear of removed primary cable lead, lethal voltages may be present.

(2) The ground resistance of this connection must be low.

(3) If the regulator trips off on open circuit, the open circuit fault is not grounded or the regulator does not have the power to drive the circuit.

Figure 16-10. Grounded output test

16.8.3 If the regulator stays on and is registering output current, the open circuit fault can be found using the grounded output test. It is common for the regulator output current to fluctuate with this test set up. This condition will not damage the regulator but continue to operate the regulator only long enough to locate the fault. Once the fault is cleared, the regulator should return to normal operation. With the regulator energized, conduct a visual inspection of the field circuit. There should be a section of lighted fixtures and a section of out fixtures. Mark the “good to bad” transition area. The open fault will be between the last light fixture operating and the first non-illuminated fixture. If all the lights are on, the open is between output “L1” and the first fixture on that side of the circuit. If all the lights are out, the open is between output “L2” and the first fixture on that side of the circuit. De-energize and lock out the regulator.

16.8.4 Remove the ground connection from the regulator output terminal. Reconnect lead “L1” to the regulator output terminal. Next, remove lead “L2” from the regulator. Cap or tape the bare end of lead “L2,” making sure it does not touch anything and stay away from it when the regulator is energized. Next, connect the regulator output terminal from which “L2” was removed, to earth ground. Energize the regulator to the highest step. Stay away from the test connection to ground. Conduct a visual inspection of the field circuit. This time the fixtures that were on in the last test should be out and the fixtures that were out in the last test should be on. The visual appearance of the circuit now should be the exact opposite of 16.8.3 with the “good to bad” transition area in the same location. If this is true, the open is between the two light fixtures adjacent to the fault marker. De-energize and lock out the regulator. Start at one light fixture and work toward the other checking AGL transformer windings, connections, splices, and the primary cable for opens. Repair or replace any defects as necessary. To verify that the open fault has been corrected, measure the resistance across output “L1” and “L2” with an ohmmeter. If the resistance is less than 700 ohms, the circuit is free of all opens. Anything over 700 ohms indicates the presence of an open or high resistance fault somewhere on the circuit. Remember, every circuit will have a different resistance value depending on the number and wattage of the light fixtures, but 700 ohms is the maximum for any airfield circuit. Remove the ground connection from the regulator and reconnect output “L2” to the regulator. Energize the regulator to the high step for approximately thirty minutes. This procedure will enable a double check that the repair work was done correctly. Perform a visual inspection of the circuit and remove the fault marker(s) from the field.

16.9 USING HEAT SENSING EQUIPMENT TO LOCATE GROUND FAULTS

Any time there are two shorts to ground in a series circuit, the current flowing to ground through the breach in the cable or transformer insulation produces heat. This is caused by the arcing that occurs when a good solid connection is not present in an electrical circuit. In the case of series circuits operated by constant current regulators, the regulator can produce very high voltages and damage and heat from arcing can be great. Some airports have learned to use this unfortunate circumstance to their advantage. By utilizing economical infrared thermometers, the electrician is able to measure the difference between the temperature of a normal light can or fixture and one that is running an abnormally high temperature. Infrared thermometers are available that use laser sighting and are effective at distances long enough to allow their use from a moving vehicle. Using this equipment, an electrician can drive down the runway or taxiway checking the temperature of each light/can until one is found that exhibits a higher temperature than the others and then investigate that light. This method has proven to be a great time saver at several airports.

16.10 USING CABLE FAULT LOCATING EQUIPMENT TO LOCATE GROUND FAULTS

Cable locating and fault finding technology has improved vastly over the years with many manufacturers offering equipment capable of locating underground cable and ground or shield faults. These units consist of a transmitter and receiver and, if equipped for fault finding, usually have an optional A-frame pickup unit for use with the receiver. They are able to detect the location of ground faults in direct-buried cables and can be highly accurate.

Chapter 17

ELECTRICAL TEST EQUIPMENT

17.1 GENERAL

17.1.1 This section describes several types of electrical test equipment used for maintenance of lighted navigational aid equipment. The test equipment is listed in order of relative usefulness. For maintenance purposes, it is recommended that every facility acquire at least a volt-ohm-milliammeter and an insulation tester. These two units are required for many maintenance routines and are useful for troubleshooting. Operating instructions for the equipment listed are contained in the manufacturer's manual supplied with the equipment. Periodic condition checks should be performed on all test equipment to ensure safe operation.

17.1.2 Technical procedures for testing, as described herein, should be checked against local rules of safety.

Safety — Rubber insulating gloves

17.1.3 Employees who work on aerodrome electrical systems are required by applicable regulatory agencies (e.g. Occupational Safety and Health Agency (OSHA)) to have personal protection equipment (PPE) against shock hazard. This includes rubber insulating gloves and associated leather glove protectors. Although as a general practice one should not work on energized circuits, this rule is not always possible to follow. As well, cables of other circuits may be present in the same manhole or transformer housing and an assumed de-energized cable may actually be live due to crossover failures. Therefore, in doing tests or investigations of aerodrome circuits, one should always wear insulating gloves.

17.1.4 Rubber insulating gloves should be certified and inspected before each day’s use and immediately following any incident that can reasonably be suspected of having caused damage. Before each use, rubber goods should be visually inspected for holes, embedded wires, rips or tears, ozone cutting, UV checking and signs of chemical deterioration. Insulating gloves should be sent for periodic proof testing on at least a six-month basis.

17.2 VOLT-OHM-MILLIAMMETER (VOM)

17.2.1 An analogue volt-ohm-milliammeter is a highly versatile piece of test instrument that is capable of measuring AC/DC voltages, resistance, and low values of DC current. The better quality units offer reasonable accuracy and ruggedness and are useful for making a large variety of measurements. The most common use of this instrument is for making resistance measurements on series circuits for the purpose of troubleshooting when a fault has occurred. An analogue VOM is useful because of its ability to show fluctuating trends and rates and the ease with which it offers a go, no-go check when rapid troubleshooting is required.

17.2.2 An analogue VOM does however have limitations. Its relatively low-input impedance and susceptibility to interference make it unsuitable for some measurements, especially when dealing with electronic circuits or when working in an environment with radio frequency (RF) energy present. Also, it must be remembered that a typical VOM should not be used for making current measurements in an airfield lighting series circuit because it may not be designed for true RMS, high accuracy measurements.

Safety

17.2.3 Safety must always be considered when using the VOM. The voltage levels and shock hazards related to all equipment to be tested must be known. Be sure that the VOM has been tested and calibrated. Portable test instruments should be inspected and calibrated at least once a year. Check the condition of the VOM test leads before making any measurements. General safety recommendations for specific uses of a VOM are contained in the manufacturer's manual supplied with the equipment:

a) *High-voltage measurements.* Never try to take direct voltage readings on power distribution circuits rated over 600 volts. Measurement of high voltage is accomplished by installing properly rated instrument transformers and meters.

b) *Switch settings.* When making voltage measurements on power and control circuits, be sure that the meter selector and range switches are in the correct position for the circuit under test before applying test leads to the circuit conductors. To prevent damage to the meter movement, always use a range that ensures less than full-scale deflection of the pointer. A 1/3 to mid-scale deflection of the pointer assures the most accurate readings.

c) *Case insulation.* Do not hold the VOM in the hand while taking the reading. Support the instrument on a flat surface. If holding the VOM is unavoidable, do not rely upon the insulation of the case.

17.3 DIGITAL MULTIMETER (DMM)

17.3.1 A digital multimeter is another piece of essential test equipment for the airport electrician’s toolbox. This versatile instrument can deliver high accuracy and, through the use of various accessories, the ability to make a wide range of measurements. The best advice when purchasing this or any type of test equipment is to buy the best you can possibly afford. Always make sure that the DMM you use is a true RMS type and that the accessories are of the highest quality and accuracy.

17.3.2 A DMM with a good quality clamp-on ammeter accessory is a good combination for measuring the output current of constant current regulators. Verify that all DMM accessories are within the accuracy requirements for the intended task. Ensure that the accuracy of the DMM and all accessories are checked and calibrated annually by a certified calibration lab for the ranges to be measured. In the case of airport lighting series circuits, 2.8 to 20 amps is the range for verifying proper calibration.

Safety

17.3.3 All safety precautions listed for VOMs also apply to DMMs.

17.4 INSULATION RESISTANCE TESTER (MEGOHMMETER)

17.4.1 An insulation resistance tester or megohmmeter is a necessary tool for maintaining and troubleshooting underground airport lighting series high-voltage cables. The testers come in a variety of styles from the traditional hand-crank models to battery and AC mains powered versions. These instruments are used for testing the insulation resistance-to-ground of underground cables; for testing insulation resistance between conductors; and for testing resistance-to-ground or between windings of transformers, motors, regulators, etc. The battery-powered models are the most prevalent and come in all shapes and sizes in both analogue and digital readout. Most of the digital models have

an analogue bar graph to supplement the digital reading. The high-voltage tester should contain an accurate voltmeter and microammeter for reading the voltage applied to the circuit and the insulation leakage current.

17.4.2 Another consideration in selecting an insulation resistance tester is the output voltage. Some battery- and line-powered units now have selectable output voltages that can range as high as 5 000 volts DC. As a minimum, select an insulation resistance tester with an output of 1 000 volts DC. If possible, consider using a unit with higher maximum voltage output as this lends more possibilities of finding high resistance faults and more closely approximates the rated voltage of the cables and transformers. However, note that testing old cables in questionable condition and/or circuits that have been operating at much lower voltages may suffer damage from testing at voltages over 1 000 volts. Exercise caution when testing older circuits for the first time.

Safety

17.4.3 Following precautions should be followed:

a) These tests should be supervised carefully by qualified personnel to ascertain that excessive voltages are not applied.

b) When preparing to make an insulation resistance test, first make a complete safety check. Make sure that equipment to be tested is disconnected from all power sources. Open all safety switches and lock out other control equipment so that the equipment cannot be accidentally energized.

c) If neutral or ground conductors must be disconnected, make sure they are not carrying current and that, when disconnected, no other equipment will lack protection.

d) Observe the voltage rating of the tester and take suitable precautions.

e) Large equipment and cable usually have sufficient capacity to store a dangerous amount of energy from the test current. After taking resistance readings and before handling the test leads, allow any energy stored in the equipment to discharge by leaving the tester connected for at least 30 seconds before touching the leads. Many new testers will automatically discharge the equipment under test and give the user a visual or audible indication when it is safe to remove the test leads. Consult the equipment manual for information on manufacturer's instructions.

f) Do not use the tester in an explosive atmosphere. An explosion may result if slight sparking is encountered when attaching or removing test leads, or as a result of arcing through or over defective insulation.

17.5 INSULATION RESISTANCE TEST

17.5.1 Performing regular preventive maintenance (PM) checks on airfield lighting circuits is absolutely necessary for reliable operation of the system. Because of the potential of operating at very high voltages, the components of the series circuit are extremely susceptible to failure.

17.5.2 Perform insulation resistance tests on all airfield circuits on a monthly basis as a minimum. If the airport has circuits that fail regularly due to age or other reasons, consider weekly checks. Many potential failures can be found during daylight hours before they become a problem by making weekly PM insulation resistance checks a habit. Keep records in the regulator vault with the circuit identified as well as the date and results of the test. Provide space for notes as to special conditions such as weather conditions at the time of the test, recent lightning activity and to note failure locations and causes when found. A sample form is shown in Figure 17-1.

Figure 17-1. Test record form

AIRPORT LIGHTING CIRCUIT TEST RECORD

Vault or substation # _____

Circuit identification _____

DATE	OHMS	WEATHER CONDITIONS AND COMMENTS	INITIALS

Figure 17-1. Test record form

17.5.3 When testing older circuits, especially circuits that normally operate at lower voltages, use of a 5 000 volts DC tester may show a fault in an otherwise undetected weak spot in a cable or transformer. It is therefore advisable, when testing at voltages higher than 1 000 volts DC, to be prepared to make immediate repairs if necessary.

17.5.4 When performing insulation resistance tests for preventive maintenance, it is necessary to be consistent in the way the tests are carried out from one session to the next. Test results may vary due to a number of circumstances. For instance, the test should be administered for the same length of time each time it is performed and at the same test voltage so that the results may be accurately compared.

17.5.5 A very important consideration when performing insulation resistance tests is the time required for the reading of insulation resistance to reach a maximum. The primary cause of delay in reaching full charge is known as the dielectric absorption effect. It may be a matter of several minutes before this is completed and for the reading to reach an absolute maximum. It is best to establish a minimum time for conducting the tests based on experience.

17.5.6 For short time readings of insulation resistance, operate the instrument for a definite length of time, either 30 seconds to 1 minute, and read at the end of that time. Make future tests with the same length of operating time.

17.5.7 Other variables such as moisture, weather, and time of day may affect the readings. Readings should ideally be taken after circuits have been de-energized for several hours. Readings may appear higher immediately after operating the circuit. This is a sign of deteriorating insulation in transformers and possibly cable that is allowing moisture to enter. Operating the circuits raises the temperature and drives moisture from the insulation resulting in an artificially higher reading.

17.5.8 There is no ideal value for insulation resistance readings on series circuits due to factors such as circuit length, age, etc. The best rule here is to base this decision on past experience with your own facility. Each circuit may be different based on age, manufacturer of cable and equipment, installation methods (direct buried or installed in conduit), local weather conditions, and the amount of moisture normally present in the system.

17.5.9 The decision of when to consider a circuit failing and in need of preventive maintenance repairs may vary from one circuit to another at the same facility. Generally speaking, any circuit that measures less than 1 megohm is certainly destined for rapid failure. The time it takes for a circuit to fail is affected by the output voltage of the regulator, type of fault and presence of moisture at the location of the fault. The larger the circuit size in kW, the higher the output voltage and hence, the more the condition of the insulation becomes critical.

17.5.10 The important information is the deterioration of resistance values from month to month and year to year. The resistance value inevitably declines over the service life of the circuit; a 10-20 per cent decline per year may be considered normal. A yearly decline of 50 per cent (4 per cent monthly) or greater indicates the existence of a problem (such as a high resistance ground) or serious deterioration of the circuit insulation. In this instance, the maintenance supervisor should consider performing troubleshooting to locate the problem. A table for typical existing circuit loop resistance is shown in Table 17-1.

Table 17-1. Suggested resistance values for maintenance

Circuit length	*Suggested minimum resistance to ground*
Less than 3 000 m	50 megohms
3 000 m to less than 6 000 m	40 megohms
6 000 m or more	30 megohms

17.5.11 It should also be noted that the insulation resistance that is required for new installations will have a great effect on the ability of the maintenance staff to maintain the series lighting circuits after installation and acceptance. With newer cable installations being more frequently installed in conduit and base cans as opposed to direct burial, initial resistance values up to and in excess of 500 megohms are normally achievable and should be required (see Figure 17-2).

17.6 UNDERGROUND CABLE/FAULT LOCATOR

17.6.1 A cable locator is an indispensable tool for quickly locating airport lighting cable and ducts. A cable locator normally consists of a transmitter, which is either directly (or indirectly by means of an inductive coupler) attached to an underground cable and a receiver that is used to pick up the transmitted signal to follow the path of the cable. Cable locators are very handy for locating the path of a conductor while troubleshooting cables in PVC conduit and are even more necessary when dealing with direct-buried cables.

17.6.2 Whenever work on the airport requires digging of any kind, it is necessary to utilize a cable/fault locator to prevent inadvertent cutting of cables. Most of the receivers also incorporate the ability to locate 60 Hz AC cables without the necessity of applying a signal or tone to the conductor. If the airport circuits are supplied by direct-buried conductors or have direct-buried control cables, it is advisable to purchase a locator which also has the capability of locating ground faults. It should be noted, however, that faults in cables installed in conduits cannot be located using these devices. Cable locators that include fault-finding capability are normally equipped with an A-frame probe that is used with the receiver to determine the direction of a fault between the conductor or shield to ground.

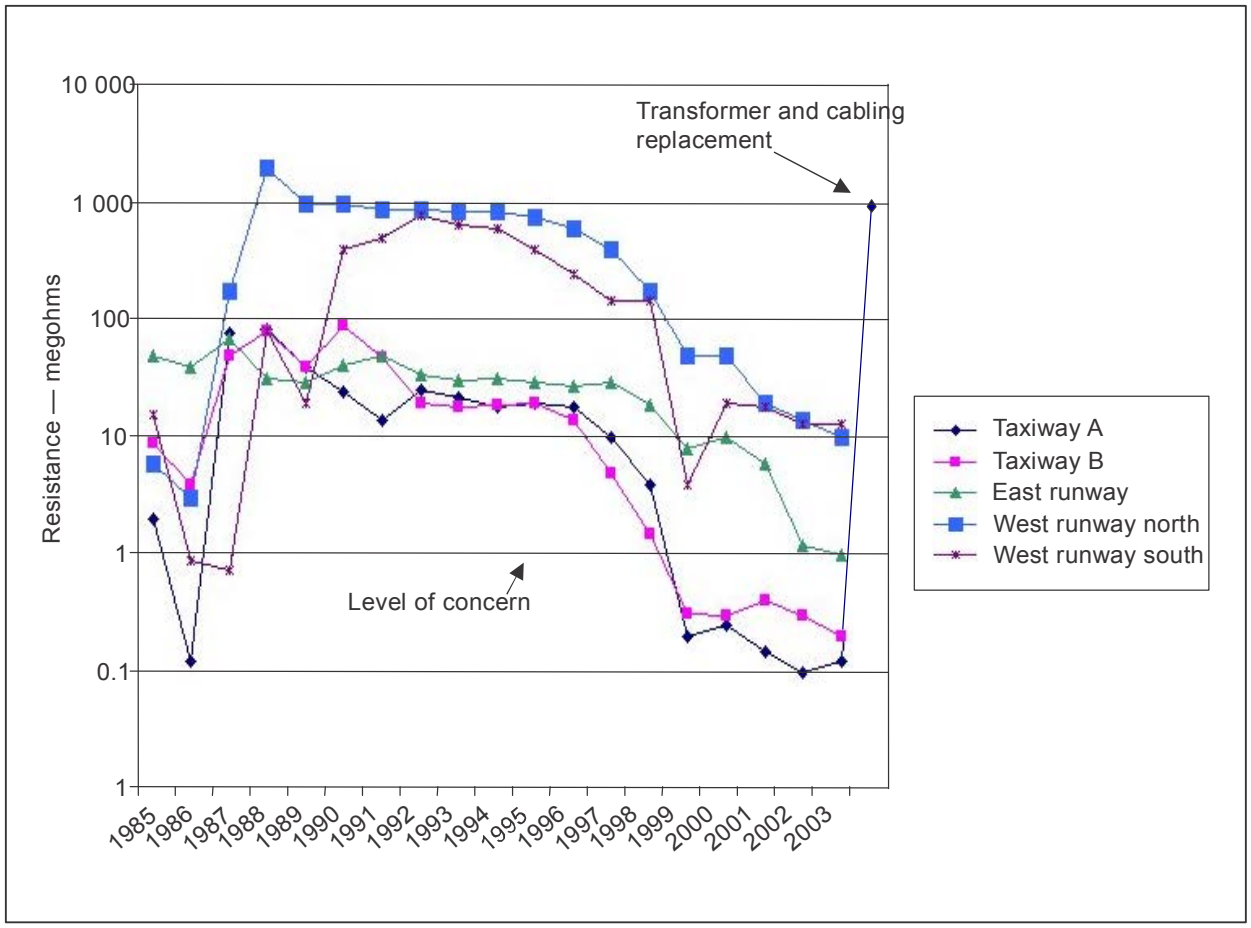

Figure 17-2: Example of insulation resistance measurements

Safety

17.6.3 When using a direct connection to the conductor to be located or tested, always exercise care to ensure that the circuit supplying the conductor has been de-energized, locked out and tagged.

17.7 HIGH-RESISTANCE FAULT LOCATOR

17.7.1 The high-resistance fault locator utilizes a modified Wheatstone bridge circuit in which the two sections of the faulted conductor (one on each side of the fault) comprise the two external arms of the bridge. The remaining two arms of the bridge are contained in the instrument. By using a detector circuit of extremely high input resistance, it is possible to locate high-resistance faults. With this bridge arrangement, faults having resistances from 0 to 200 megohms can be located within an accuracy of ±0.5 per cent. A typical error would be 15 cm in 150 m, i.e. ±0.10 per cent.

17.7.2 Due to the high sensitivity of this test set, a balance can often be obtained with a good conductor (the fault location will be indicated as the centre point of the conductor). Such a balance would be due to normal cable leakage current and would result in a reading of approximately 50 per cent in a cable of uniform insulation quality at a uniform temperature. For this reason, the existence of a fault should be established by insulation resistance measurements before attempting to determine the actual location of the fault.

Safety

17.7.3 Before attempting to make any connections, make sure that all exposed cables are de-energized.

17.8 CLAMP-ON AMMETER

17.8.1 The true root mean squared (true RMS) ammeter measures alternating current. Some models are provided with plug-in leads to permit the instrument to be used as a voltmeter or as an ohmmeter. When checking current, use a current clamp probe.

17.8.2 The ammeter is the airfield electrician's most important tool, and should be a true RMS ammeter. Other ammeters (averaging and peak indicating) are inadequate for airport lighting use. Keep in mind that narrow tolerances are crucial for proper operation of the airfield circuit. A change of 1 per cent in current can result in up to a 7 per cent change in lumen output. Averaging and peak indicating ammeters will not measure the non-sinusoidal waveforms correctly and will indicate current levels below actual current levels. Only true RMS ammeters are capable of reading non-sinusoidal waveforms that are present on constant current regulator outputs and airfield load circuits. Because most of these devices are rated to measure current far in excess of what you need to measure on airport lighting circuits, their accuracy at the low end of the measurement scale may be in question — this may be particularly true for lighting circuits that use LED lamps. Clamp-on devices having an accuracy of ±2 per cent or better should be used because a small change in series circuit lamp current can produce a large change in lamp light output and potentially shorten lamp life. It may be beneficial to have a registered calibration laboratory check the instrument and calibrate it to the lower amp range.

17.8.3 The current clamp accessory allows current measurement without interrupting or directly coming in contact with the circuit being measured. Electricians should avoid "Hall Effect" current clamp accessories because they do not enable a true RMS reading for non-sinusoidal waveforms.

Safety

17.8.4 The clamp-on ammeter reduces operator exposure to high voltages. However, the operator must observe normal safety precautions to prevent coming in contact with exposed conductors when taking current readings. When taking a measurement on the primary side of the circuit, first turn off the regulator, apply the clamp-on and then turn on the regulator whilst standing away but sufficiently close to see the reading. Turn off the regulator again and remove the clamp-on.

17.9 CABLE ROUTE TRACER

17.9.1 The cable route tracer is an electronic instrument designed for locating, tracing, and measuring the depth of an energized underground power cable. The instrument can also be used to locate underground transformers, T-splices, and ground faults on unshielded cable.

Safety

17.9.2 Since the cable route tracer is used to trace cables which are energized with voltages that are hazardous and potentially lethal, persons testing or assisting in tests must use practical safety precautions to prevent contact with energized conductors, terminals, or other equipment.

17.10 IMPULSE GENERATOR/PROOF TESTER

17.10.1 An impulse generator/proof tester is a compact signal unit contained in a metal case. The test set is composed of an impulse generator and an internal DC power source. The impulse generator contains a capacitor bank that is periodically charged from the DC source and discharged into the cable to form the test voltage waveform.

17.10.2 In the impulse method of fault location, the impulse generator repeatedly applies a high-voltage waveform to the defective cable. This waveform travels along the cable until it reaches the fault. At the fault, the voltage causes significant current to pass through the return path. This current, or its results, can be located and the fault position along the cable length can be traced by an acoustic detector or a directional detector (section 17.12).

Safety

17.10.3 The test set and the cable to which it is connected are a source of high-voltage electrical energy, and all persons performing or assisting in the tests must use all practical safety precautions to prevent contact with energized parts of the test equipment and associated circuits. Persons actually engaged in the test must stand clear by at least 1 m of all parts of the complete high-voltage circuit, unless the test set is de-energized and all parts of the test circuit are grounded. Any person not directly associated with the work must be kept away from test activities by suitable barriers, barricades, or warnings.

17.10.4 High-voltage impulse waveforms and resultant current pulses create special safety problems. A large, rapidly changing current, even across small values of impedance, can generate dangerous voltage levels. The test set design provides two distinct ground systems — the apparatus case ground and the surge ground. The apparatus case ground, which must be connected to a good local ground, is designed to protect the operator by preventing a difference of potential between the apparatus case and the ground in the immediate vicinity. The surge ground is designed to return the impulse current back to the capacitor. This surge ground lead is a continuation of the output cable shield and should not be extended.

17.10.5 On termination of a test, even after power has been removed from the test set, energy can still be stored in the capacitor bank and cable. For this reason, a manual ground is included in this equipment. The voltmeter resistor will gradually reduce such stored energy to a safe, low level. Then the manual ground must be closed to place a direct short circuit across the capacitor bank and the cable under test. It is recommended that, before removal of the test set, a ground bond be placed across the cable under test and remain in place until access to the cable is again required.

17.10.6 If the test set is properly operated and all grounds correctly made, no rubber gloves are necessary. As a routine safety procedure, however, some sites require the use of rubber gloves not only in making connections to the high-voltage terminals but also in manipulating the controls. This is an excellent safety practice.

17.11 ACOUSTIC DETECTOR

17.11.1 An acoustic detector is a unique instrumentation system designed to detect the intensity of pulsed sound waves in the earth. It is primarily used with impulse generators to locate faults in direct-buried electric cables by tracing the sound emitted from the fault when the impulse generator causes it to arc.

17.11.2 The set is designed for use in all weather and can easily be carried by the operator to any field location. A sturdy carrying case is provided for storing and transport.

17.11.3 In use, the operator places a pickup element on the ground and listens for the characteristic pop or thump in the earphones, then moves along the line toward the location of the loudest sound. The set has a calibrated sound intensity meter which is used to make a final precise location of the point of maximum sound, which is directly over the fault. The meter is often found to be more sensitive than the ear in detecting a very weak signal. The meter and a solid-state amplifier are contained in a lightweight compact housing which can be carried by a strap around the neck, leaving the hands free to operate the instrument.

17.11.4 An important feature of the detector is the impulse indicator. This is an entirely separate system which detects the current pulse as it is applied to the faulted cable and gives a visual signal to the operator. When the operator is at a distance from the impulse generator and cannot see or hear it operating, the indicator ensures that the impulse generator is operating. In addition, the indicator tells the operator exactly when to listen for the thump and watch the meter. This is most useful in areas of high background noise. The impulse indicator, complete with its magnetic antenna, is included in the main amplifier housing.

17.12 DIRECTIONAL DETECTOR

17.12.1 A directional detector measures the direction and magnitude of short duration current pulses from capacitor-discharge generators. It is used for locating faults between conductors or between a conductor and the shield in underground power cables.

17.12.2 With the selection of two magnetic pickups and one conductive pickup, it can be used to locate faults in shielded or unshielded cables, either direct-buried or in a duct. The magnetic pickups give a general location of the fault; more accurate location of unshielded direct-buried cables is possible with the conductive or earth-gradient pickup.

17.12.3 The test set is also effective for tracing buried cable, giving a precise fix on both location and depth. In addition to impulse detecting, the test set can be used for tracing buried cables energized at frequencies between 60 and 1 000 Hz.

17.12.4 Finally, the test set includes a separate high-impedance voltmeter circuit for locating high-resistance earth faults in direct-buried cables energized at 60 Hz, using earth gradient probes.

17.12.5 The test set is designed to give optimum response to the typical current impulse waveform produced in a cable by a capacitor discharge. The test set measures the strength and direction (polarity) of the magnetic field created by the impulse current. The set not only indicates the presence or absence of an impulse current in the vicinity but also its direction and magnitude. This information is valuable in fault locating.

17.12.6 The test set consists of an amplifier unit, sheath pickup coil, surface pickup coil and earth gradient probe frame:

a) *Amplifier unit.* The amplifier unit contains the electronics, the battery, the output meter, and the controls.

b) *Sheath pickup coil.* This unit is a C-shaped iron core and coil molded into a solid rubber assembly. It is designed for optimum pickup of the small, high-frequency magnetic field surrounding a cable and sheath and has the ability to accurately pick out the one of three conductors inside the sheath which is carrying the test impulse current.

c) *Surface pickup coil.* This is a ferrite rod antenna enclosed in a protective tube. It is held in a T-bracket at the end of a telescoping aluminium rod with rubber handle grip. This pickup is designed specifically for detecting the magnitude and direction of impulse current magnetic fields. The T-joint is hinged and detented for positioning at 0 degrees, 45 degrees, and 90 degrees to permit easy location of maximum and minimum signals and, thus, location of the cable.

d) *Earth gradient probe frame.* This is a rigid tubular frame supporting two stainless steel probes at a fixed separation of 50 cm (20 inches) which provides a means of detecting voltage differential along the surface of the earth. Each probe is wired through a connecting cord to a plug. The frame is insulated for operator safety.

Safety

17.12.7 The impulse generator used with this directional detector and the cables to which it is connected may be a source of high-voltage electrical energy, and all safety precautions listed in the impulse generators section should be followed. When the directional detector is used with the earth gradient probes, care must be exercised to avoid contact with any energized equipment or cables, whether on the surface or buried or whether energized by the impulse generator or the power line.

17.12.8 A hazardous voltage may occur at any of the following locations:

a) At or near connections to the impulse generator, including earth or earthed conductors in the vicinity.

b) At any other terminal of the cable or connected equipment.

c) At or near the fault where earth voltage gradients may exist. The fault location is unknown, so caution must be exercised all along the buried cable run.

17.12.9 Any persons not directly associated with the work must be kept away from the danger area by suitable barriers, barricades, or warnings.

17.12.10 After the faulty section of cable has been isolated, the maintenance electrician should use a cable fault locator to pinpoint the actual location of the fault.

17.13 GROUND RESISTANCE TESTER

17.13.1 A ground resistance tester is used to measure the effectiveness of grounding systems. It does this by measuring the resistance between the grounding system and the earth ground. Follow manufacturer's instructions closely to obtain an accurate ground resistance reading, thus avoiding a false, lower than actual resistance-to-ground measurement that can result from incorrect use. The grounding system in question may be used for beacon towers, lighting vaults, engine generators, and for other lighted navigational aids, or it may be a counterpoise system for underground cables. Some of the newer models are simple clamp-on units capable of measuring the resistance-to-ground of ground rods or grounding conductors by measuring the ground leakage current without disconnecting the grounding conductor under test.

17.13.2 The maximum acceptable ground resistance is 25 ohms. It is preferable that the resistance be 10 ohms or less.

17.13.3 In many locations, the water table is gradually falling. In these cases, the ground electrode systems that were effective when initially installed are no longer effective. This emphasizes the importance of a continuous programme to periodically check the grounding system. It is not sufficient to check the grounding system only at the time of installation.

17.13.4 The resistance to ground may be determined by the "fall of potential" method, as described in ANSI/IEEE Standard 81. The fall of potential method involves the placement of two probes in a straight line away from the electrode under test, as shown in Figure 17-3. The distance *D* is sufficient to ensure a clearance from effective resistance areas around the ground electrode and the current probe so that a chart of resistances having a plateau within an established tolerance. Normally, the plateau region occurs around the 62 per cent point.

Safety

17.13.5 A grounding system is a very important integral safety feature in airport lighting systems. To be effective, the grounding system must have a very low resistance-to ground. The higher the inherent resistance of the grounding system, the greater the voltage that can build up on a grounded chassis or frame. When this built-up voltage discharges through a person, injury or death may result. For this reason, the effectiveness of the grounding system must be checked regularly.

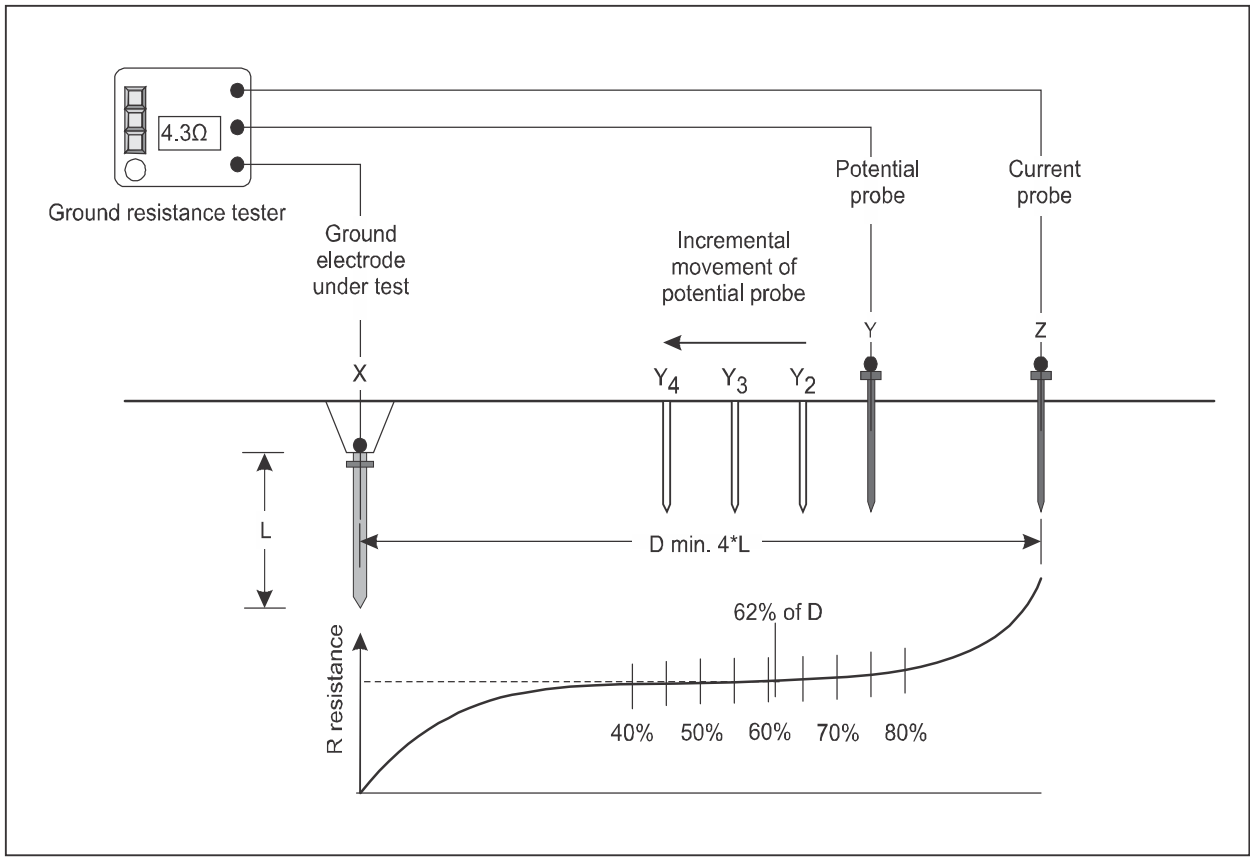

Figure 17-3. Ground resistance testing

— END —

ISBN 978-92-9258-246-3

9 789292 582463