2596151-D_EN_2105_Condair GS EGMS_IOM

GS SERIES

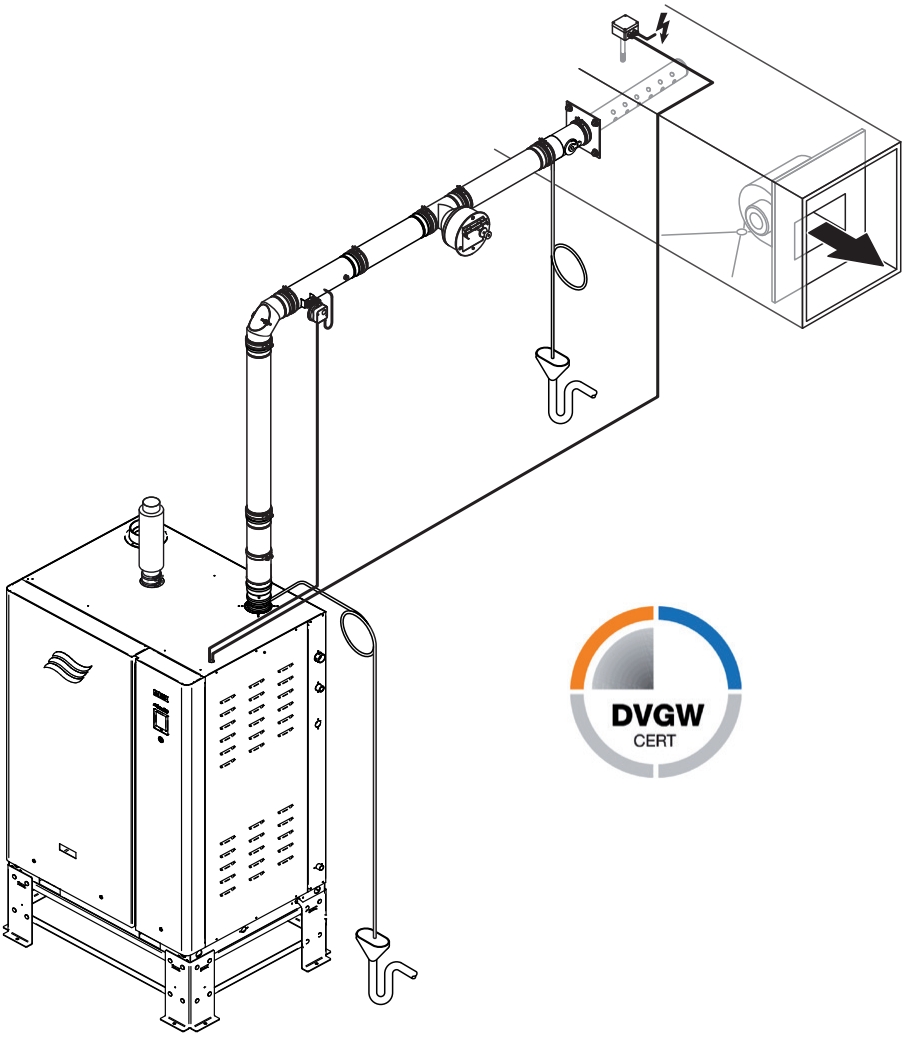

DVGW CERT

INSTALLATION AND OPERATION MANUAL

DVGW-certified exhaust gas management system for Condair **GS**

Series II

Humidification and Evaporative Cooling

condair

Thank you for choosing Condair

Installation date (MM/DD/YYYY):
Commissioning date (MM/DD/YYYY):
Site:
Model:
Serial number:

Proprietary Notice

This document and the information disclosed herein are proprietary data of Condair Group AG. Neither this document, nor the information contained herein shall be reproduced, used, or disclosed to others without the written authorisation of Condair Group AG, except to the extent required for installation or maintenance of recipient's equipment.

Liability Notice

Condair Group AG does not accept any liability due to incorrect installation or operation of the equipment or due to the use of parts/components/equipment that are not authorised by Condair Group AG.

Copyright Notice

© Condair Group AG, All rights reserved.

Technical modifications reserved

Contents

1	**Notes to these instruction**	**4**
2	**For Your Safety**	**5**
3	**System overview**	**8**
3.1	Schematic diagram	8
3.2	Description of the system	9
3.3	System requirements	9
4	**Installation**	**11**
4.1	Delivery schedule	11
4.2	Installation overview	14
4.2.1	Installation example 1	14
4.2.2	Installation example 2	15
4.3	Installation instructions	16
4.3.1	Positioning and fitting the exhaust gas distribution pipe	16
4.3.2	Assembling the exhaust gas pipes	17
4.3.3	Positioning and fitting the differential pressure switch	18
4.3.4	Positioning and fitting the draught limiter	20
4.3.5	Positioning and installing the throttle valve	23
4.3.6	Positioning and fitting the flow monitor	24
5	**Monitoring devices' electrical connection**	**25**
5.1	Electrical diagram	25
5.2	Notes on electrical installation	26
5.3	Connecting the differential pressure switch and the flow monitor	26
5.4	General wiring diagrams	27
6	**Initial commissioning and operation**	**30**
6.1	Initial commissioning	30
6.2	Operation	31
7	**Trouble shooting**	**32**

1 Notes to these instruction

Differentiation

These installation and operating instructions for the **DVGW-certified exhaust gas management system (patent pending)** available as an optional extra to the Condair GS gas-fired steam air humidifier is a supplement to the Condair GS installation and operating instructions.

They only describe the installation and commissioning of the DVGW-certified exhaust gas management system for discharging exhaust gases from the Condair GS steam air humidifier into the exhaust air of an air conditioning system (for short: AC system). You can find further information on installing and operating the Condair GS gas-fired steam air humidifier in the installation and operating instructions for this machine.

Target group

These installation and operating instructions are intended for well-trained specialists who are familiar with the risks of operating a gas-fired machine and are also familiar with the standards and regulations applying to discharging exhaust gas into the exhaust air of an AC system.

Symbol explanation

CAUTION!

The catchword "CAUTION" used in conjunction with the caution symbol in the circle designates notes in this installation manual that, if neglected, may cause **damage and/or malfunction of the unit or damage to property**.

WARNING!

The catchword "WARNING" used in conjunction with the general caution symbol designates safety and danger notes in this installation manual that, if neglected, may cause **injury to persons**. Other specific warning symbols may also be used in place of the general symbol.

DANGER!

The catchword "DANGER" used in conjunction with the general caution symbol designates safety and danger notes in this installation manual that, if neglected, may lead to **severe injury or even death of persons**. Other specific warning symbols may also be used in place of the general symbol.

Storage

These installation and operating instructions must be kept in a safe place where they will be available at any time. Should the product be transferred to another owner the installation and operating instructions must be passed on to the new operator.

Should you lose the documentation please contact your Condair supplier.

Language version

These installation and operating instructions are available in different languages. Please contact your Condair supplier for this.

2 For Your Safety

General information

Any person commissioned to install and commission the DVGW-certified exhaust gas management system must have read and understood these installation and operating instructions before starting work.
Knowledge of the content of these installation and operating instructions is a basic pre-requisite to protect staff from danger, to avoid incorrect installations and thus to install and operate the system safely and properly.

Qualification of staff

All the actions described in these installation and operating instructionsmust **only be performed by trained and sufficiently qualified specialists authorised by the operating company**.
For safety and guarantee reasons, actions not included in these instructions must only be performed by specialist staff authorised by the manufacturer.

It is assumed that all people entrusted with working on the DVGW-certified exhaust gas management system are familiar with and comply with health and safety at work and accident prevention regulations and the standards and regulations to be applied.

The DVGW-certified exhaust gas management system is not intended to be used by people (including children) with restricted physical, sensory and mental faculties or who have a lack of experience and/or knowledge unless they are supervised by a person responsible for their safety or have received instructions from this person on how the system is to be used.
Children should be supervised to ensure that they do not play with the system.

Safety

Should the DVGW-certified exhaust gas management system not be installed or commissioned properly equipment may be damaged or people injured. **Therefore be sure to observe and obey all the information and safety instructions in this manual and the installation and operating instructions for the gas-fired Condair GS steam air humidifier**.

Dangers that may arise from the Condair GS gas-fired steam air humidifier



DANGER!
Risk of fire or explosion!

The Condair GS works with gas. Incorrectly performed installations, improper operation and maintenance, incorrect settings and unauthorised modifications to the equipment may lead to personal injury or damage to property due to explosions, fires, carbon dioxide poisoning, electric shocks etc.

Therefore: Only trained, qualified specialists authorised by the operating company may work on the gas system. Before starting work on the gas system, shut the Condair GS down in accordance with the instructions in the installation and operating instructions for the Condair GS (turn the machine off, unplug it and turn off the water and gas supply) and ensure that it cannot be turned on again accidentally.

Do not store or use any inflammable substances in the vicinity of the Condair GS.

What to do if you smell gas:
- **DO NOT try to light any appliance.**
- **DO NOT touch any electrical switch.**
- **DO NOT use any phone in the building.**
- **Leave the building immediately.**
- **Call your gas supplier immediately from a location far away from the building with the gas leak. Follow the gas supplier's instructions. If you cannot reach your gas supplier, call the fire department.**



DANGER!
Risk of electric shock!

The Condair GS is mains powered. Live parts can be touched if the machine is open. Touching live parts may lead to serious injuries or death.

Therefore: Before starting work on the Condair GS, shut it down in accordance with the instructions in the operation manual for the Condair GS (turn the unit off, disconnect it from the mains supply and turn off the water and gas supply) and ensure that it cannot be turned on again accidentally.



WARNING!
Risk of severe burns from contact with hot surfaces!

The water tank, the steam pipes and the exhaust gas system get very hot when they are operating. There is the risk of burns if you touch these components while the machine is operating or shortly afterwards.

Therefore: Do not touch the water tank, the steam pipes and the exhaust gas system while they are operational. Before starting work on the Condair GS, shut it down in accordance with the instructions in the operation manual for the Condair GS (turn the machine off, disconnect it from the mains supply and turn off the water and gas supply) and ensure that it cannot be turned on again accidentally. Then wait until the components have cooled sufficiently so that there is no longer a risk of burns.

Danger that could arise from the DVGW-certified exhaust gas management system



WARNING!
Risk of severe burns!

During operation hot exhaust gases and condensate steam escape from the exhaust gas distribution pipe. These may lead to burns.

Therefore: Before undertaking installation or maintenance work on the DVGW-certified exhaust gas management system shut the Condair GS gas-fired steam air humidifier down in accordance with the instructions in the operation manual of the Condair GS (turn the machine off, disconnect it from the mains supply and turn off the water and gas supply) and ensure that it cannot be turned on again accidentally.

Intended use

The DVGW-certified exhaust gas management system is intended exclusively for discharging the exhaust gases from the gas-fired Condair GS steam air humidifier into the exhaust air of an AC system within the specified operating conditions (see *chapter 3.3 on page 9*). Any other use without the manufacturer's written consent will be considered improper use and may lead to the Condair GS steam air humidifier becoming dangerous.
Proper use also includes **complying with all the information in these installation and operating instructions (particularly all safety and danger instructions) and all standards and regulations that must be complied with.**

Unauthorised modifications

No modifications or extensions may be made to the DVGW-certified exhaust gas management system without the manufacturer's written consent.

To replace defective system components **only use original accessories and spare parts** from your Condair supplier.

3 System overview

3.1 Schematic diagram

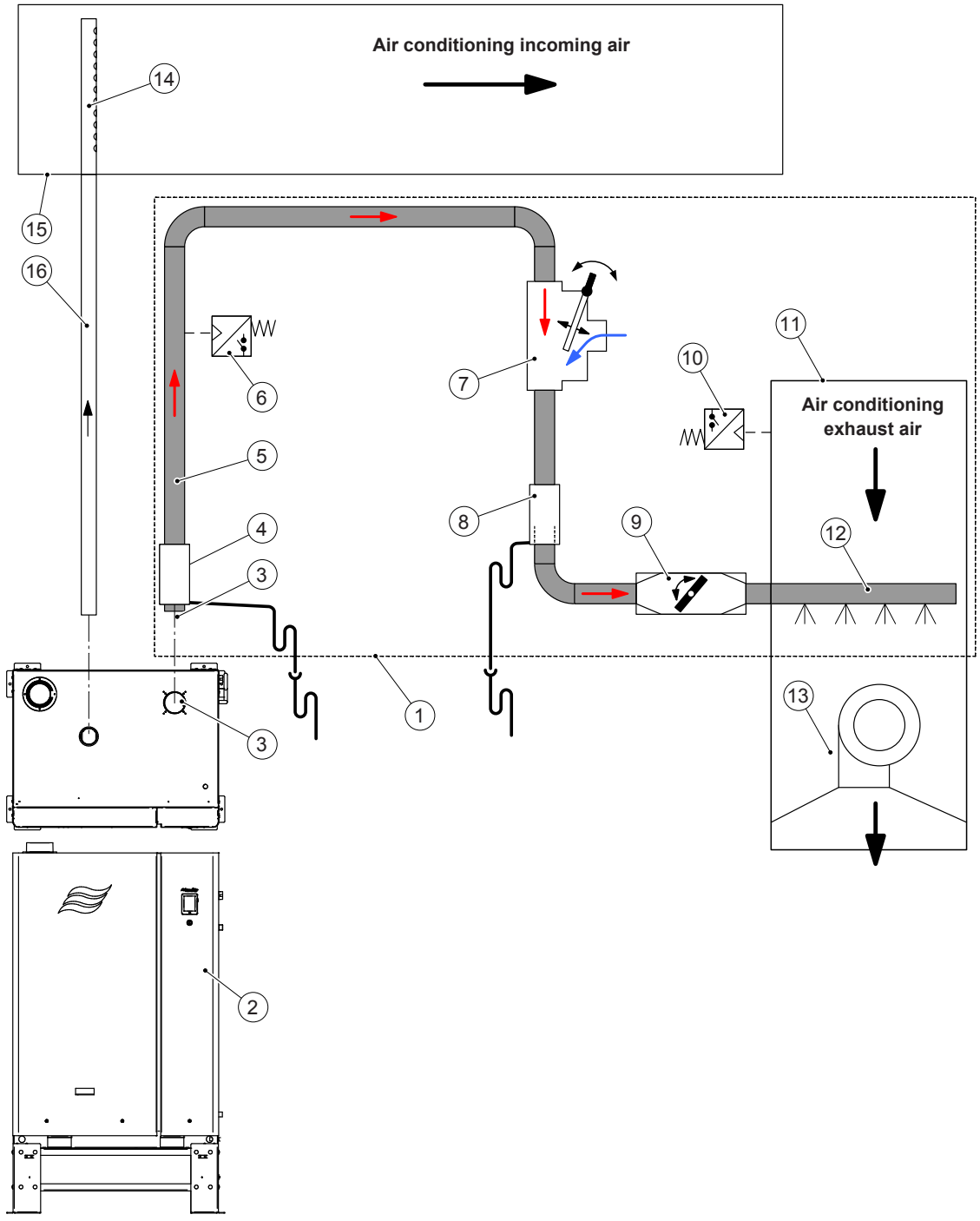

Fig. 1: Schematic diagram

1 DVGW-certified exhaust gas management system
2 Gas-fired steam air humidifier
3 Exhaust gas discharge connection
4 Condensate trap
5 Exhaust gas pipe
6 Differential pressure switch
7 Draught limiter
8 Condensate trap
9 Throttle valve (fixed position)
10 Flow monitor
11 Exhaust air
12 Exhaust gas distribution pipe
13 Exhaust air fan
14 Steam distributor
15 Incoming air
16 Steam pipe

3.2 Description of the system

With the DVGW-certified exhaust gas management system (1) the exhaust gases from the Condair GS gas-fired steam air humidifier can be discharged via the exhaust air discharge unit of an air conditioning system into the open air. To do this the Condair GS exhaust gases are fed through the exhaust gas pipe at negative pressure to the exhaust gas distribution pipe (12) into the exhaust air unit of the air conditioning system and there diluted by the exhaust air flowing past and discharged.

The system is monitored by the differential pressure switch (6) and the flow monitor (10) that are connected in series to the safety chain connections on the Condair GS connection terminal.

The differential pressure switch (6) monitors the minimum negative pressure and the flow monitor the minimum air speed. If one or both values fall below this minimum value the safety chain is disconnected and the Condair GS switched off.

The maximum permissible negative pressure is monitored by the Condair GS's flame monitor and exhaust gas temperature gauge.

3.3 System requirements

In order to ensure that the DVGW-certified exhaust gas management system works properly obey the following instructions:

– The Condair GS steam air humidifier **must be in the same room** as the air conditioning system exhaust air installation.

– In order to guarantee a sufficient air after flow there must be an opening in the room to the outside air with a minimum free cross section area in accordance with the table below.

		Condair GS 23	**Condair GS 45**	**Condair GS 65**	**Condair GS 90**	**Condair GS 130**	**Condair GS 195**	**Condair GS 260**
Min. free cross section area	cm^2	50	88	120	150	225	350	460

– The **exhaust gas distribution pipe must be installed upstream of the exhaust air fan.** With this there must be a **minimum distance of 1 m** from the exhaust air fan.

– The **outlets** of the exhaust gas distribution pipe must point **in the direction of flow**.

– A **throttle valve** and a **draught limiter must be installed**.

– A **differential pressure switch** and a **flow monitor** to monitor the operation **must be installed**.

– The permissible exhaust gas pipe lengths must be at least 4 m and no more than 10 m.

– The control unit must be switched in such a way that the Condair GS connection is shut down first before the air conditioning system is switched off. Otherwise the steam air humidifier will be shut off as a safety measure (error message).

– At air temperatures of <20 °C in the exhaust air system a drain outlet with inclines on all sides must be provided in the AC system in the section downstream of the exhaust gas distribution pipe that must be connected via a trap and an open discharge hopper to the waste water pipe in the building (to discharge any condensate).

– Minimum air volume flow of the air conditioning unit:

		Condair GS 23	**Condair GS 45**	**Condair GS 65**	**Condair GS 90**	**Condair GS 130**	**Condair GS 195**	**Condair GS 260**
Steam output	kg/h	23	45	65	90	130	195	260
Nominal output	kW	20.5	41.0	65.1	82.0	123.0	184.5	246.0
Min. air quantity	m^3/h	1025	2050	3075	4100	6150	9225	12300

– Permissible negative pressure range (system limits)

Position of the throttle valve	Maximum negative pressure Exhaust air	Minimum negative pressure Exhaust air
9 (fully open)	-1200 Pa	-300 Pa
8	-1200 Pa	-300 Pa
7	-1200 Pa	-300 Pa
6	-1200 Pa	-300 Pa
5	-1500 Pa	-400 Pa
4	-1500 Pa	-400 Pa
3 - 1	For maximum negative pressure values greater than -1500 Pa [1)]	

[1)] For maximum negative pressure values greater than -1500 Pa or minimum negative pressure values lower than -300 Pa in the air conditioning system, please contact your regional centre.

4 Installation

WARNING

For all installation work on the gas-fired **Condair GS steam air humidifier shut the machine down** in accordance with the instructions in the operation manual of the Condair GS (turn the machine off, disconnect it from the mains supply and turn off the water and gas supply) and ensure that it cannot be turned on again accidentally.

4.1 Delivery schedule

The pipework for the exhaust gas management system is supplied complete in a set for a pipe length of 8 m. All pipe parts are made of DIN 14404 stainless steel.

	Pipe diameter	Part No. Standard set (8 m) [2]
Condair GS 23 / Condair GS 45 / Condair GS 65	**100 mm** [1]	**2598918**
Condair GS 90 / Condair GS 130	**100 mm**	**2598920**
Condair GS 195 / Condair GS 260	**150 mm**	**2598921**

[1] 80 mm to 100 mm adaptor included in standard 8 m set
[2] Standard set does NOT include differential pressure switch, flow monitoring device, or exhaust distribution pipe.

Component and Part No.			Quantity in 8 m set		
			GS 23-65	GS 90-130	GS 195-260
1000 mm pipe 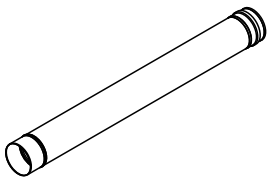	GS 23-130	2597025	5		
	GS 195-260	2597188			
500 mm pipe 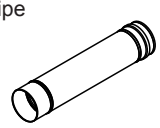	GS 23-130	2597033	2		
	GS 195-260	2597187			
300... 500 mm adjusting component 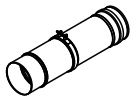	GS 23-130	2597028	1		
	GS 195-260	2597186			
90° rigid elbow with inspection lid 	GS 23-130	2597046	2		
	GS 195-260	2597184			
87° rigid elbow with inspection lid 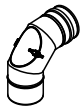	GS 23-130	2597047	2		
	GS 195-260	2597185			

Component and Part No.				Quantity in 8 m set		
				GS 23-65	GS 90-130	GS 195-260
Moulded part for draught limiter 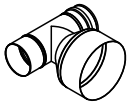		GS 23-130	2597049	1		
		GS 195-260	2597179			
Draught limiter ø180 mm 		GS 23-130	2597050	1		
		GS 195-260	2597721			
Pipe with measurement connections 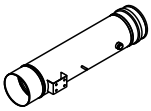		GS 23-130	2597051	1		
		GS 195-260	2597718			
Throttle valve with condensate port 		GS 23-130	2597052	1		
		GS 195-260	2597723			
Pipe clip + lip seal (pre-installed on pipe parts) 		GS 23-130	2597054 + 2597055	14		
		GS 195-260	2597719 + 2597720			
Pipe bracket   Length 1 m		GS 23-260	2597064	5		
		GS 23-130	2597067	5		
		GS 195-260	2597068			
Adapter (ø80 mm to ø100 mm) 		GS 23-65	2597066	1	——	——
Exhaust pipe adapter with condensate drain and brass nipple 	ø100 mm	GS 23-130	2599071	1	1	——
	ø150 mm	GS 195-260	2599072	——	——	1
Lubricant for seal		GS 23-260	2597065	1		

The following items are **not included** in the standard set and **must be ordered separately**:

Component and Part No.				Quantity		
				GS 23-65	**GS 90-130**	**GS 195-260**
Exhaust gas distribution pipe (Fit to size of duct) 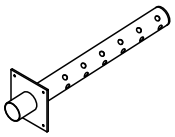	100-5 (670mm)	GS23-130	2569548	1	1	—
	150-5 (670mm)	GS195-260	2599066	—	—	1
	100-10 (1070 mm)	GS23-130	2569549	1	1	—
	150-10 (1070 mm)	GS195-260	2599067	—	—	1
	100-15 (1385 mm)	GS23-130	2569550	1	1	—
	150-15 (1385 mm)	GS195-260	2599068	—	—	1
	100-20 (2050 mm)	GS23-130	2569551	1	1	—
	150-20 (2050 mm)	GS195-260	2599069	—	—	1
Differential pressure switch 		GS23-260	2599902	1		
CDA duct flow monitoring device 		GS23-260	2599895	1		
Condensate hose (for exhaust pipe adapter and throttle valve)		GS 23-260	1109730	1		

4.2 Installation overview

4.2.1 Installation example 1

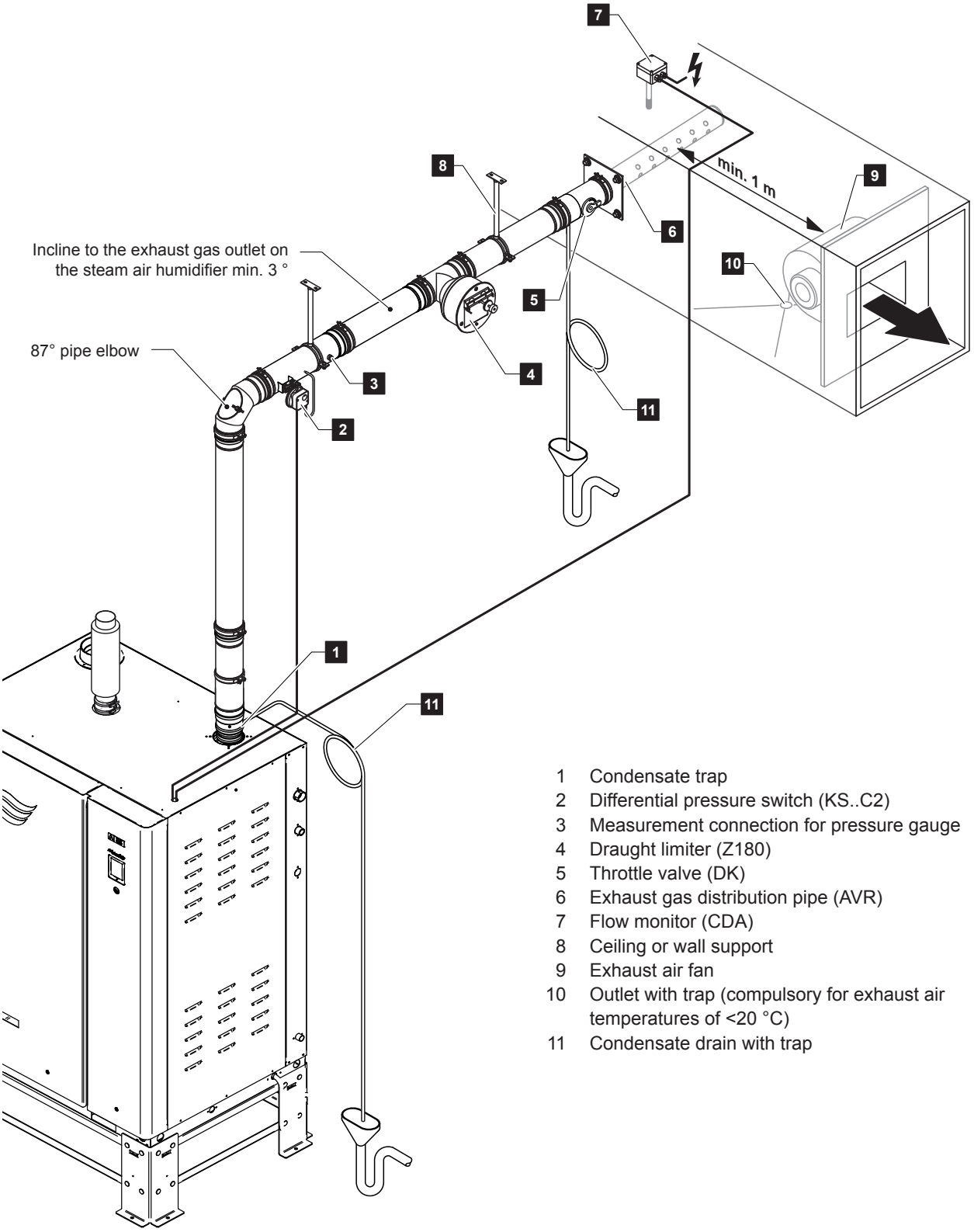

1 Condensate trap
2 Differential pressure switch (KS..C2)
3 Measurement connection for pressure gauge
4 Draught limiter (Z180)
5 Throttle valve (DK)
6 Exhaust gas distribution pipe (AVR)
7 Flow monitor (CDA)
8 Ceiling or wall support
9 Exhaust air fan
10 Outlet with trap (compulsory for exhaust air temperatures of <20 °C)
11 Condensate drain with trap

Fig. 2: Installation example 1

4.2.2 Installation example 2

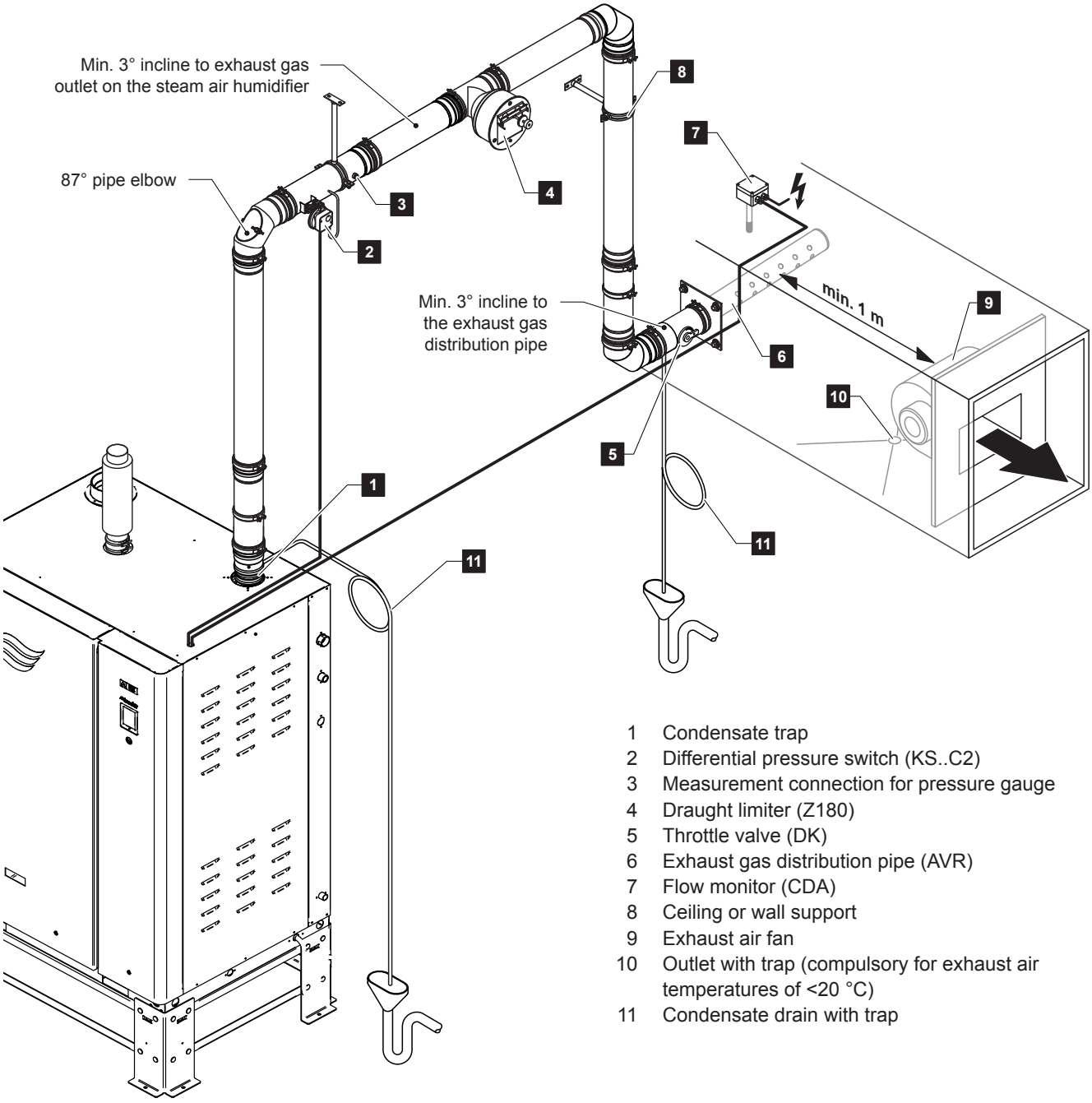

1 Condensate trap
2 Differential pressure switch (KS..C2)
3 Measurement connection for pressure gauge
4 Draught limiter (Z180)
5 Throttle valve (DK)
6 Exhaust gas distribution pipe (AVR)
7 Flow monitor (CDA)
8 Ceiling or wall support
9 Exhaust air fan
10 Outlet with trap (compulsory for exhaust air temperatures of <20 °C)
11 Condensate drain with trap

Fig. 3: Installation example 2

4.3 Installation instructions

4.3.1 Positioning and fitting the exhaust gas distribution pipe

Positioning the exhaust gas distribution pipe

The exhaust gas distribution pipe must be installed at least 1 m upstream of the exhaust air fan in the middle of the duct wall.

Fitting the exhaust gas distribution pipe

1. Mark the hole for the pipe at the location provided on the duct wall and drill the hole.

	Diameter of hole
Condair GS 23/45	110 mm [1]
Condair GS 65	110 mm [1]
Condair GS 90/130	110 mm [1]
Condair GS 195/260	160 mm [1]

[1] absolutely necessary

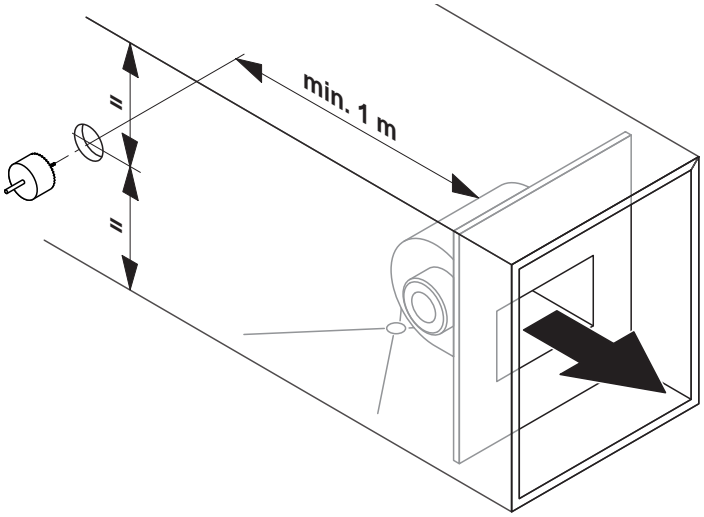

Fig. 4: Drilling the feedthrough hole

2. Insert the exhaust gas distribution pipe (outlet holes must point towards the exhaust air fan), align the fixing flange horizontally with a spirit level. Then fix the flange to the duct wall with the 4 self-tapping screws.
   Note: The end of exhaust gas distribution pipes >800 mm long must be fixed to the duct wall or the duct ceiling (see detail in *Fig. 5*).

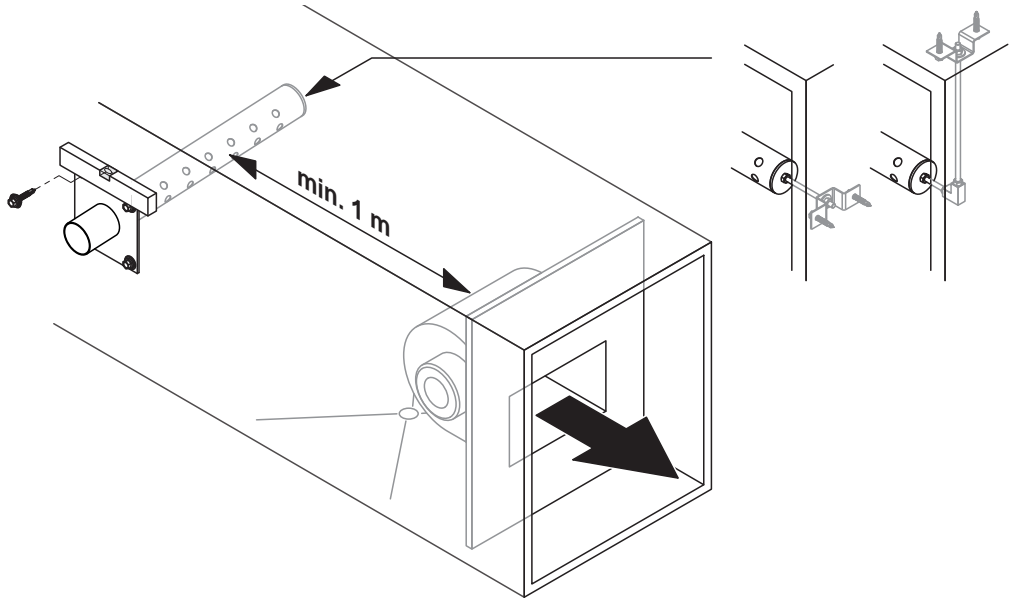

Fig. 5: Fixing the exhaust gas distribution pipe

4.3.2 Assembling the exhaust gas pipes

Pipe connections

Proceed as follows to connect the exhaust gas pipes:

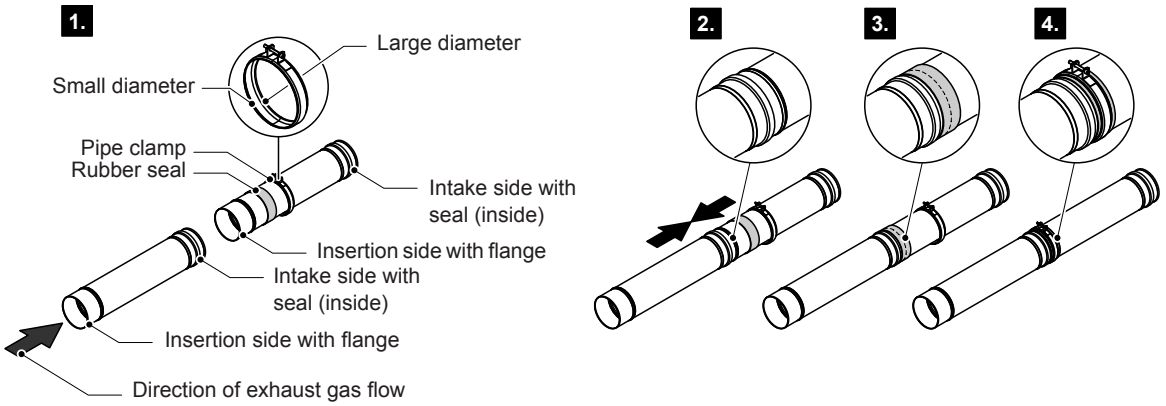

Fig. 6: Connecting the pipes

1. Push the pipe clamp (with the large internal diameter pointing in the direction of the exhaust gas) and the rubber seal on the insertion side onto the pipe or the pipe elbow as shown.
2. Push the pipe into the intake side of the other piece of pipe until it can go no further.
3. Push the rubber seal over the point where the two pipes meet.
4. Push the pipe clamp over the rubber seal and tighten.

Important information about the design of the exhaust gas pipe

– Only use the installation material contained in the delivery schedule.
– A condensate trap must be fitted on the Condair GS downstream of the exhaust gas connection (compulsory). The condensate pipe must be fed at a constant incline via a trap (hose bend with a minimum diameter of 200 mm) into an open discharge hopper on the building's waste water pipe.
– All horizontal pipe sections must be designed with a constant incline (ca. 3°) to the Condair GS condensate trap or to the condensate connection on the exhaust gas distribution pipe.
– The exhaust gas pipe must be self-supporting. Therefore the exhaust gas pipe must be fixed to the wall or ceiling using the supplied pipe clamps accordingly.
– If individual pipes must be shortened they must be shortened on the insertion side and a new crimp made with a crimping machine.

4.3.3 Positioning and fitting the differential pressure switch

Positioning the differential pressure switch

The pipe with the measurement connections (P-RM) must be inserted into the exhaust gas pipe in such a way that the connection piece for the differential pressure switch is positioned if possible in the middle of the Condair GS exhaust gas connection and the draught limiter. There must be a **minimum distance of 1m** between the Condair GS exhaust gas connection and the draught limiter.

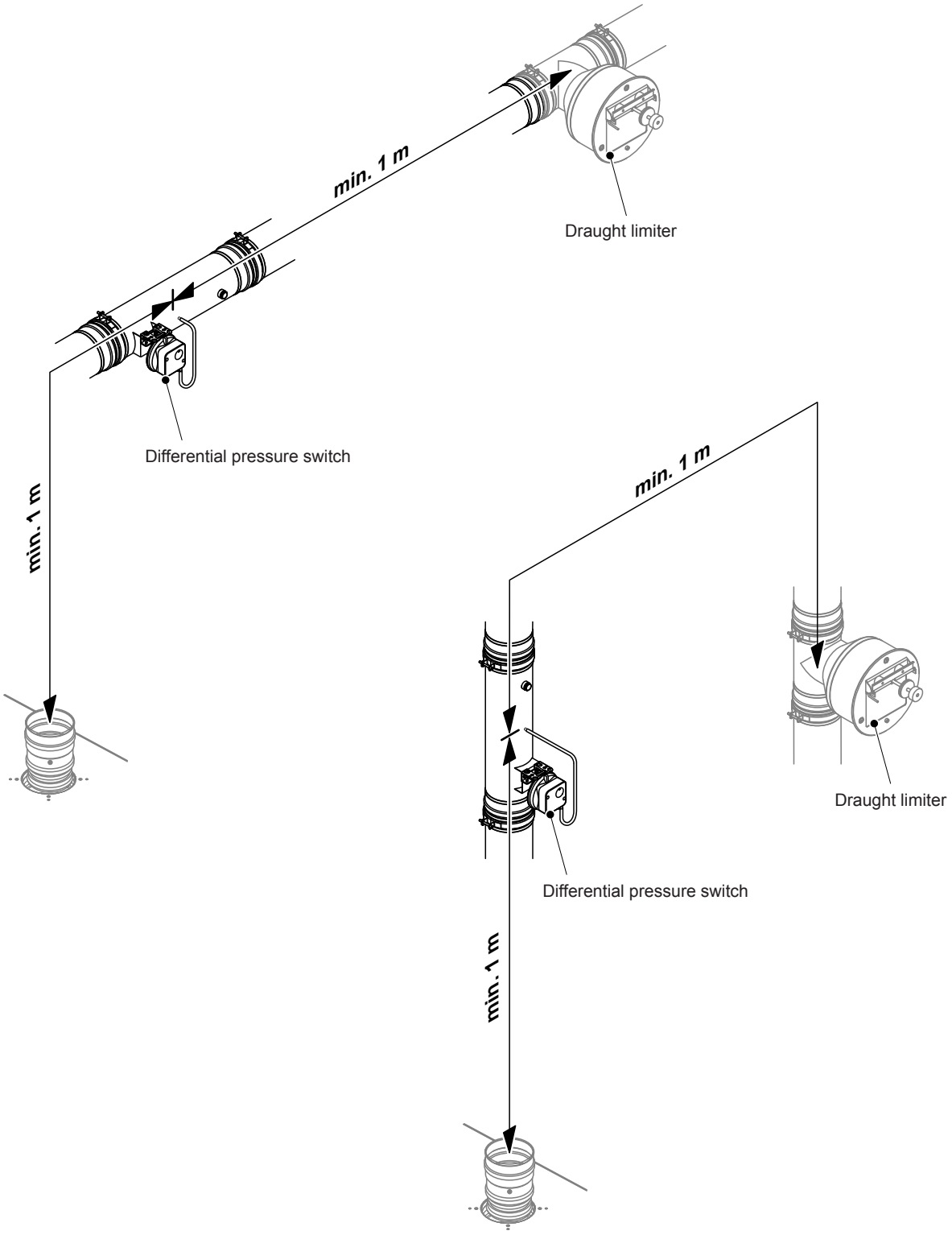

Fig. 7: Positioning the differential pressure switch

Fitting the differential pressure switch

Separate fitting instructions are enclosed for the differential pressure switch. Please note and follow the instructions in this manual.

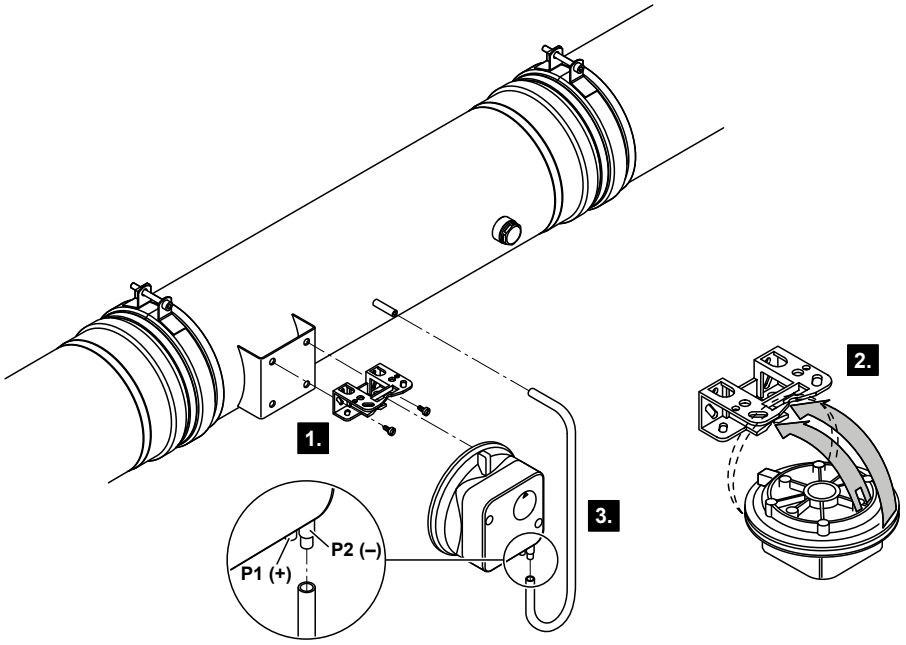

Fig. 8: Fitting the differential pressure switch

1. Fix the differential pressure switch bracket onto the measurement pipe support with two screws.
2. Snap the differential pressure switch into the bracket as shown.
3. Attach the measuring hose to the connection P2(–) on the differential pressure switch and to the connection piece of the measuring pipe.

4.3.4 Positioning and fitting the draught limiter

Positioning the draught limiter

The draught limiter (Z180) must be fitted as close as possible to the Condair GS exhaust gas connection. There must be **minimum distances of 2 m** from the Condair GS exhaust gas connection and **1 m** from the differential pressure switch.

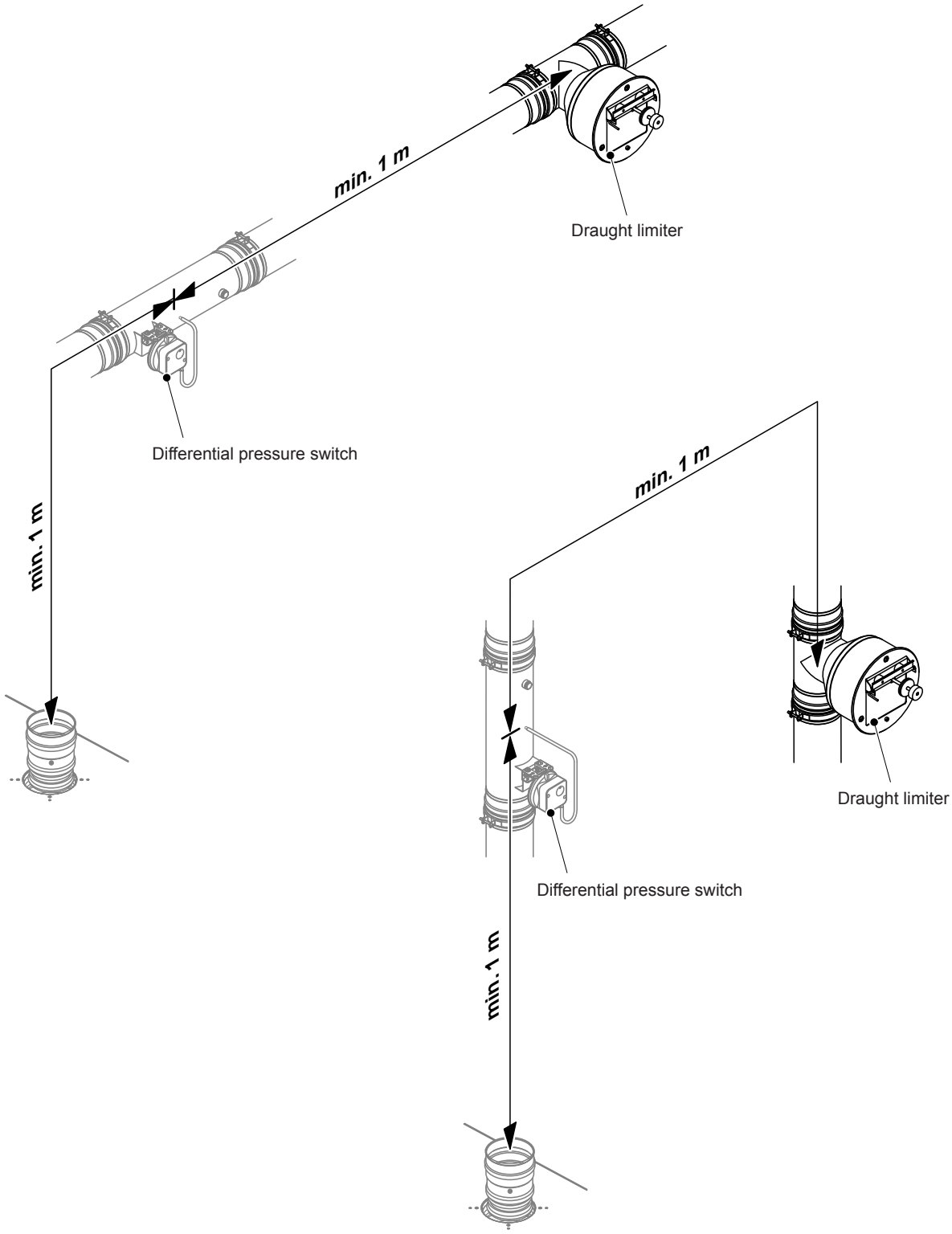

Fig. 9: Positioning the draught limiter

Fitting the draught limiter

Note: Separate fitting instructions are enclosed for the draught limiter. Please note and follow the instructions in this manual.

1. Fit the T pipe (P-AF) into the exhaust gas pipe and align the pipe socket vertically with a spirit level.

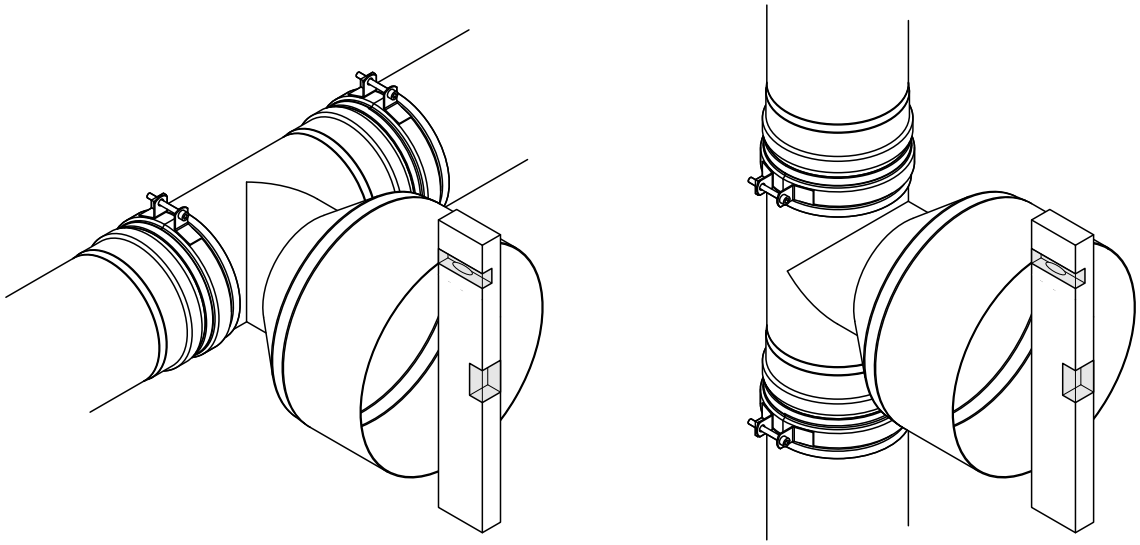

Fig. 10: Fitting the T pipe

2. Insert the draught limiter into the pipe connections and align it precisely horizontally and vertically with a spirit level. Then fix the draught limiter to the pipe connection with the eccentric screws.

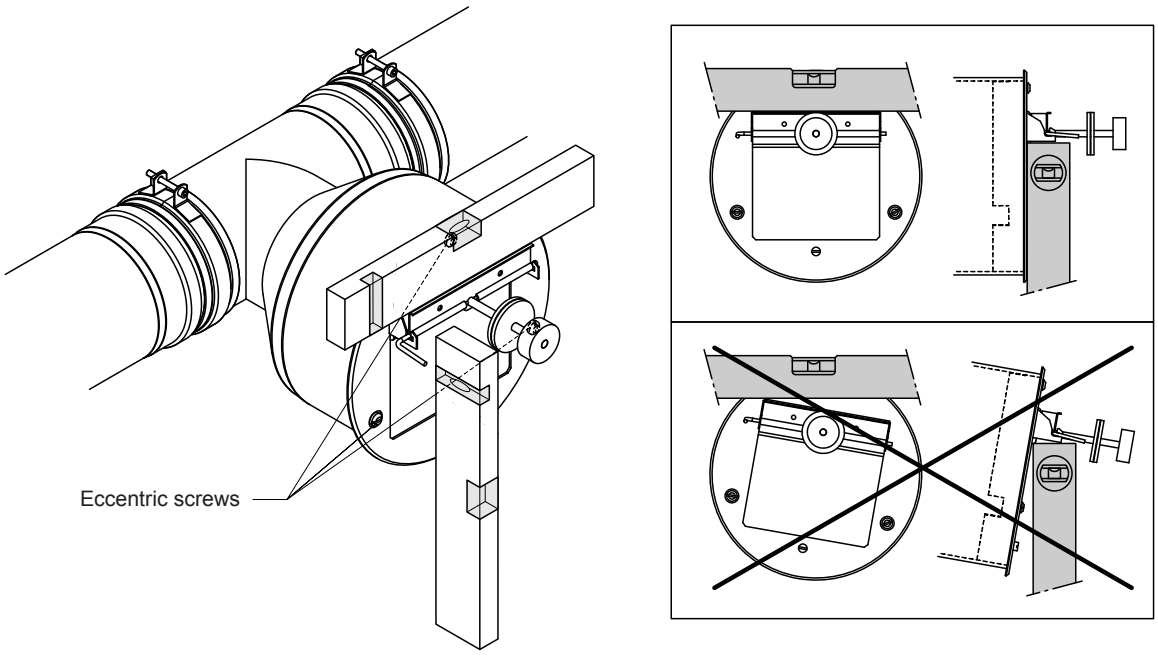

Fig. 11: Mounting and aligning the draught limiter

3. Turn the locking screw to the left until it stops in order to release the draught air valve.

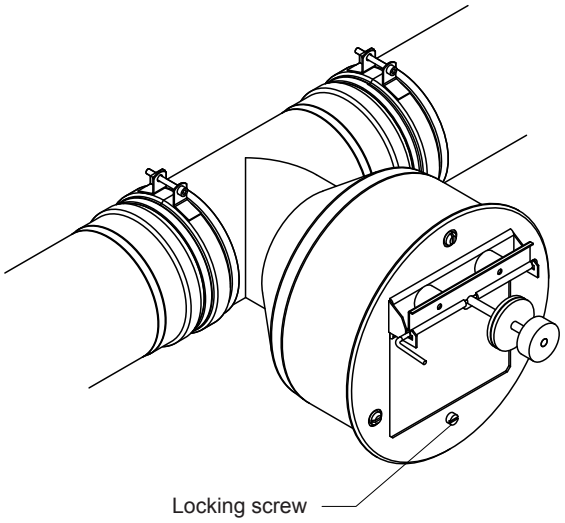

Fig. 12: Releasing the draught limiter

4.3.5 Positioning and installing the throttle valve

The throttle valve (DK) must be connected directly to the exhaust gas distribution pipe and fixed to the supplied pipe clamp on the exhaust gas distribution pipe (see illustration below). The condensate discharge connection must point vertically downwards.
The condensate hose is attached to the condensate connection and run at a constant incline via a trap (hose bend ø min. of 200 mm) into an open discharge funnel connected to the building's waste water pipe.

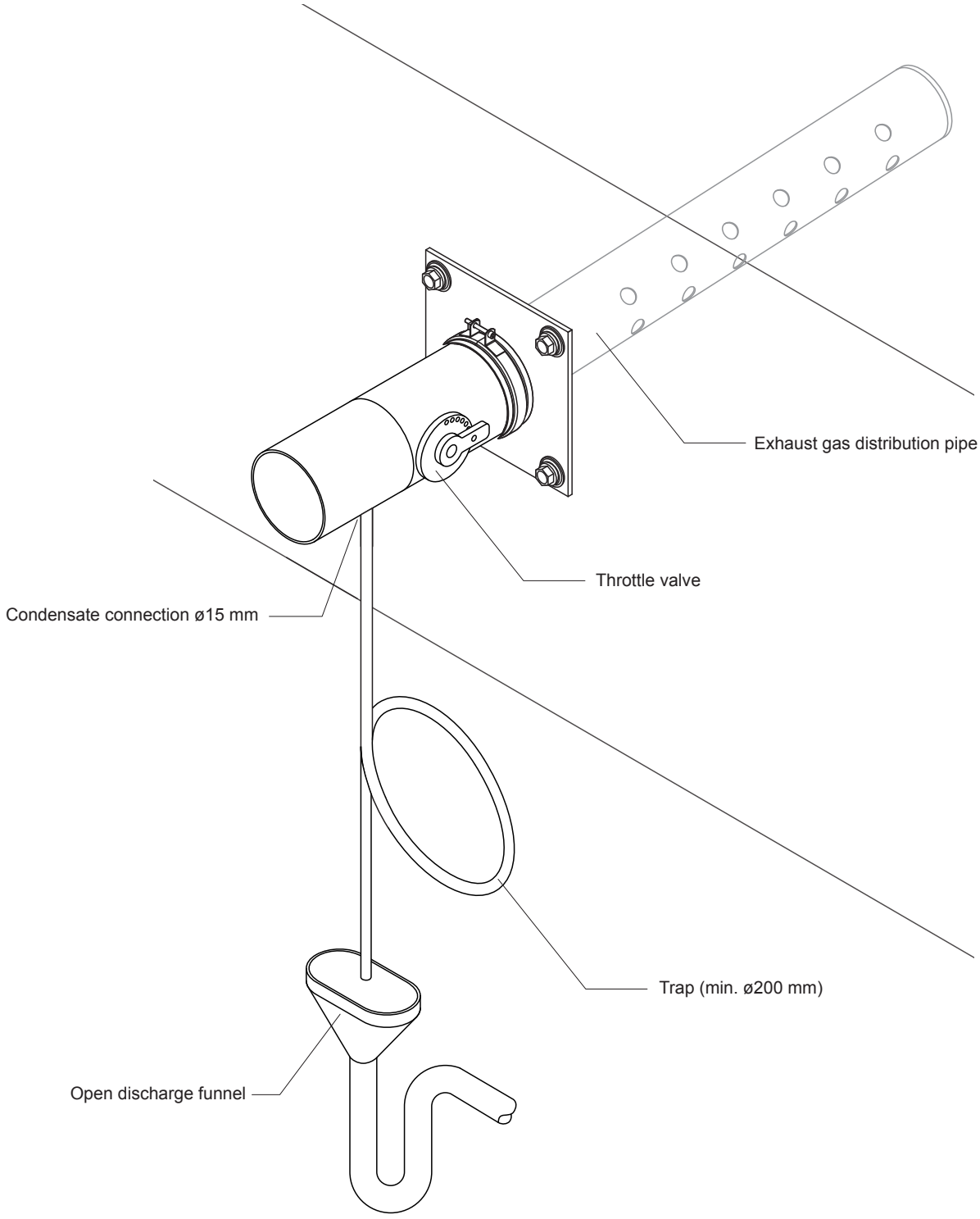

Fig. 13: Positioning and installing the throttle valve

4.3.6 Positioning and fitting the flow monitor

Positioning the flow monitor

The CDA flow monitor must be installed shortly upstream of or directly above the exhaust gas distribution pipe (seen from the direction of flow) at the top in the middle of the duct.

Installing the flow monitor

Note: Separate fitting instructions are enclosed for the flow monitor. Please note and follow the instructions in this manual.

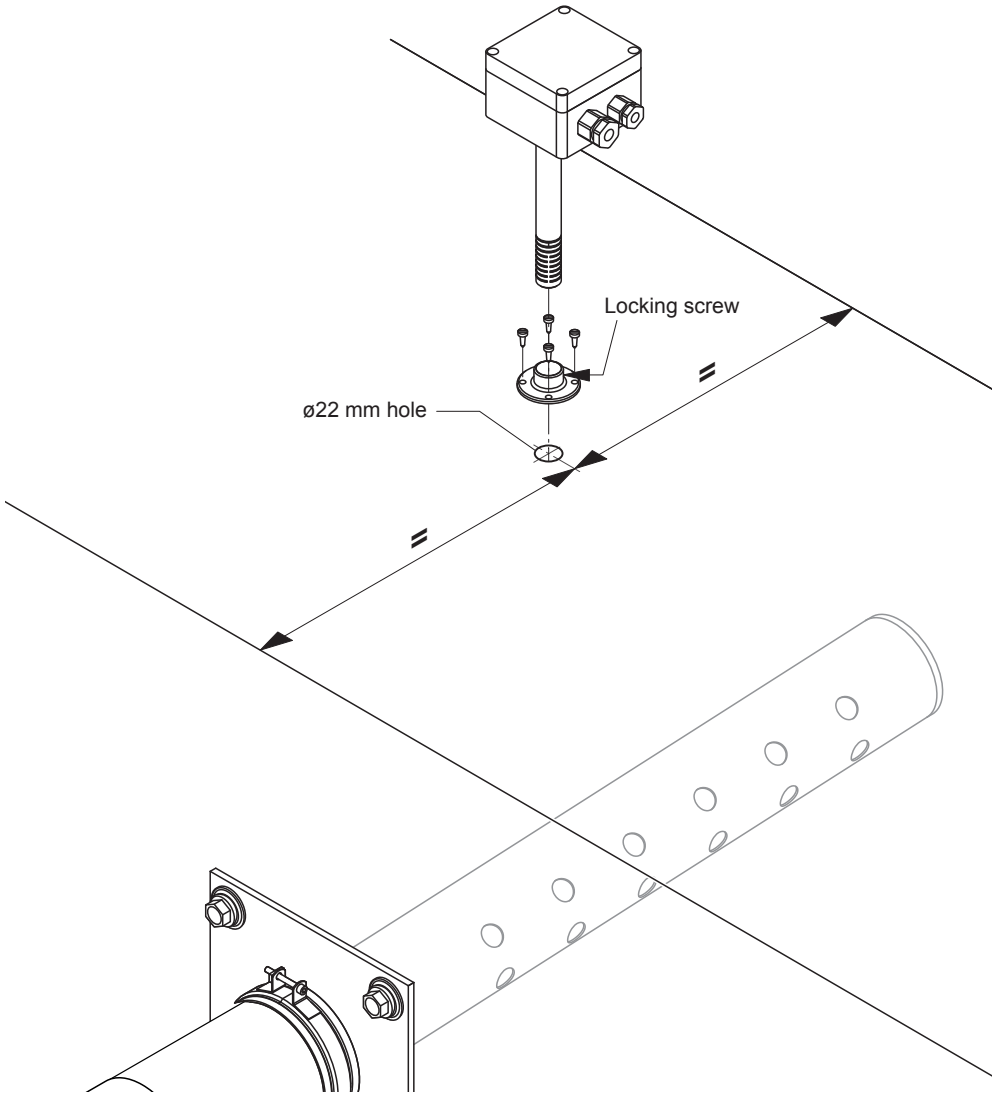

Fig. 14: Installing the flow monitor

1. Mark the position of the hole and drill a hole with a ø22 mm.
2. Fix the fixing flange centrally over the hole on the duct with the four sheet metal screws supplied.
3. Insert the flow monitor at the required depth in the duct with the fixing flange and fix it into the flange with the locking screw.

5 Monitoring devices' electrical connection

5.1 Electrical diagram

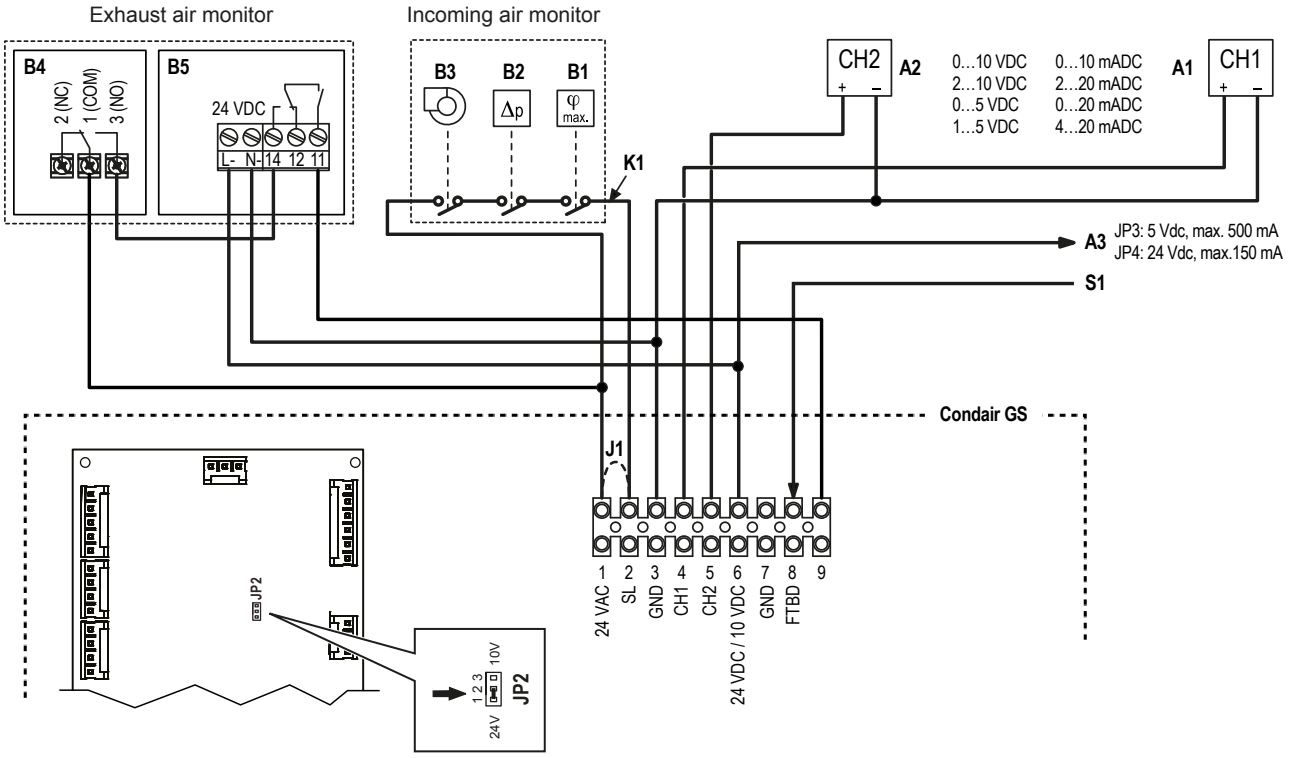

Fig. 15: Electrical diagram

A1 Control or sensor signal CH1
(Signals can be configured using the control software)
A2 Limiter signal CH2
(Signals can be configured using the control software)
A3 24 Vdc (JP4) or 5 Vdc (JP3) output
B1 Incoming air maximum hygrostat (building side)
B2 Incoming air flow monitor (building side)
B3 Incoming air fan lock (building side)
B4 Exhaust gas management differential pressure switch
B5 Exhaust air flow monitor
F1 External fuse (10 A, slow, building side)
220...240 VAC power supply
F2 Fuse (6 A, fast) 24 VAC power supply
H1 Remote operating and error notification
J1 Jumper (if no monitoring devices are connected)
JP2 Jumper voltage output 24 VDC or 10 VDC (**Jumper must be set to 24 VDC**)
JP3 Jumper (to set output A3 to 5 Vdc, max. 500 mA)
JP4 Jumper (to set output A3 to 24 Vdc, max. 150 mA)
K1 External safety chain
Q External service switch or connection plug
RJ45 Modbus communication interface (for detailed information see separate documentation)
S1 Tank emptying input (24 VAC)

5.2 Notes on electrical installation

Any electrical installation work must only be performed by a designated specialist (electrician or specialist with equivalent training). It is the customer's responsibility to check the qualifications.

Please comply with all local regulations regarding the design of electrical installations.

DANGER!
Risk of electric shock!

The Condair GS is mains powered. Live parts can be touched if the machine is open. Touching live parts may lead to serious injuries or death.

Therefore: Before starting work on the Condair GS, shut it down in accordance with the instructions in the operation manual of the Condair GS (turn the unit off, disconnect it from the mains supply and turn off the water and gas supply) and ensure that it cannot be turned on again accidentally.

CAUTION!

The electrical components inside the humidifier, the differential pressure switch and the flow monitor are sensitive to electrostatic discharges. In order to protect these components measures must be taken to prevent electrostatic discharge (ESD protection) for all installation work.

5.3 Connecting the differential pressure switch and the flow monitor

Note: In order to connect the differential pressure switch and the flow monitor comply with and obey all information in the separate instructions supplied with these products.

Connecting the differential pressure switch and the flow monitor

Contacts **NO (2) and COM (3) on the differential pressure switch** and **contacts 11 and 14 of the flow monitor** are connected in accordance with the electrical diagram (see *Fig. 15*) via a lustre terminal to the yellow cable on the Condair GS pressure sensor monitor.

The power supply (230 V / 50..60 Hz) for the flow monitor is connected in accordance with the electrical diagram (see *Fig. 15*) to the **terminals L and N and the earth contact**.

DANGER!
Risk of electric shock!

The flow monitor is mains powered. Live parts can be touched if the flow monitor is open. Touching live parts may lead to serious injuries or death.

Therefore: Before starting work, ensure that the flow monitor is disconnect it from the mains supply.

5.4 General wiring diagrams

Wiring diagram Condair GS - 23/45/90

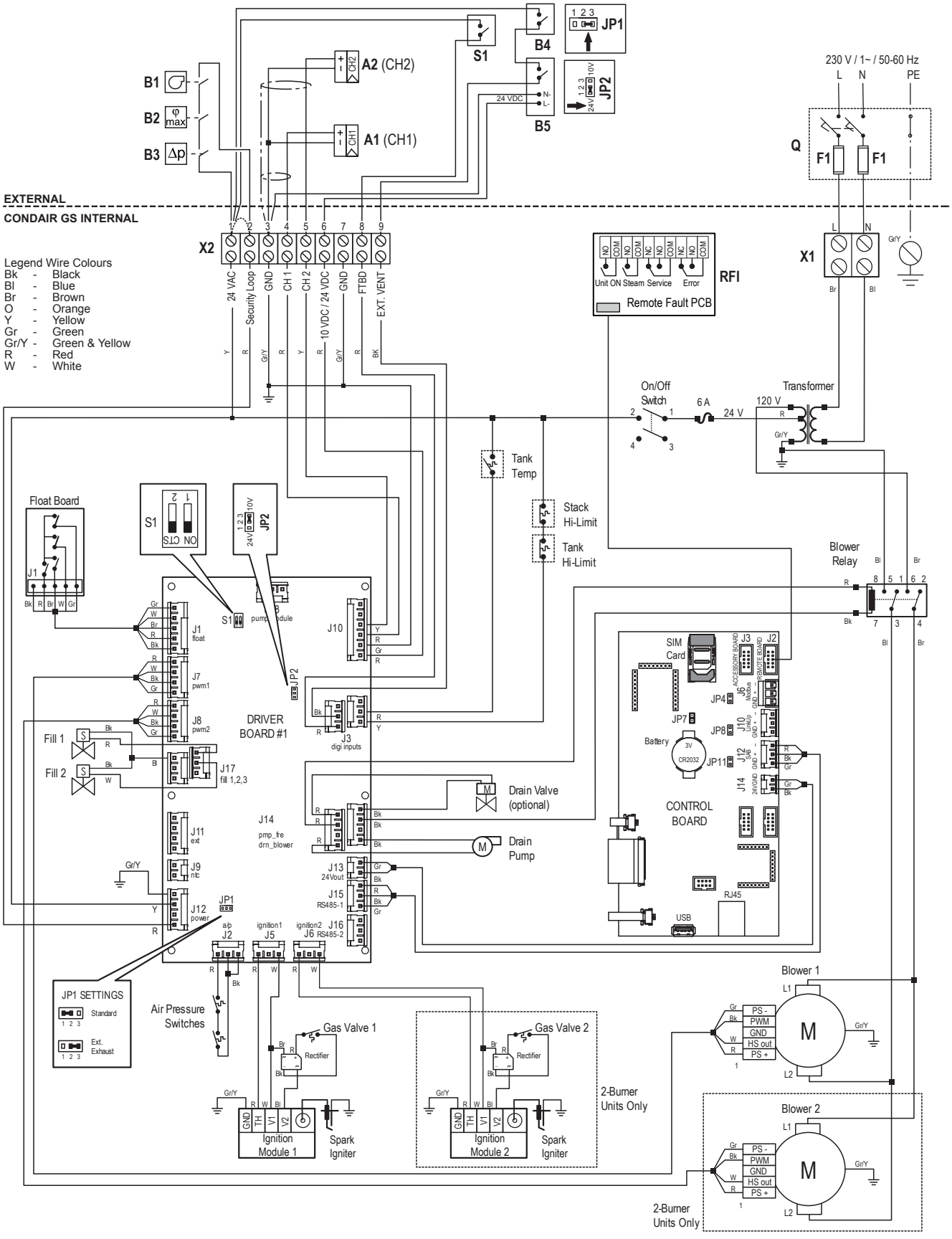

Fig. 16: Wiring Diagram - Condair GS 23/45/90

Wiring Diagram Condair GS 65/130/195/260

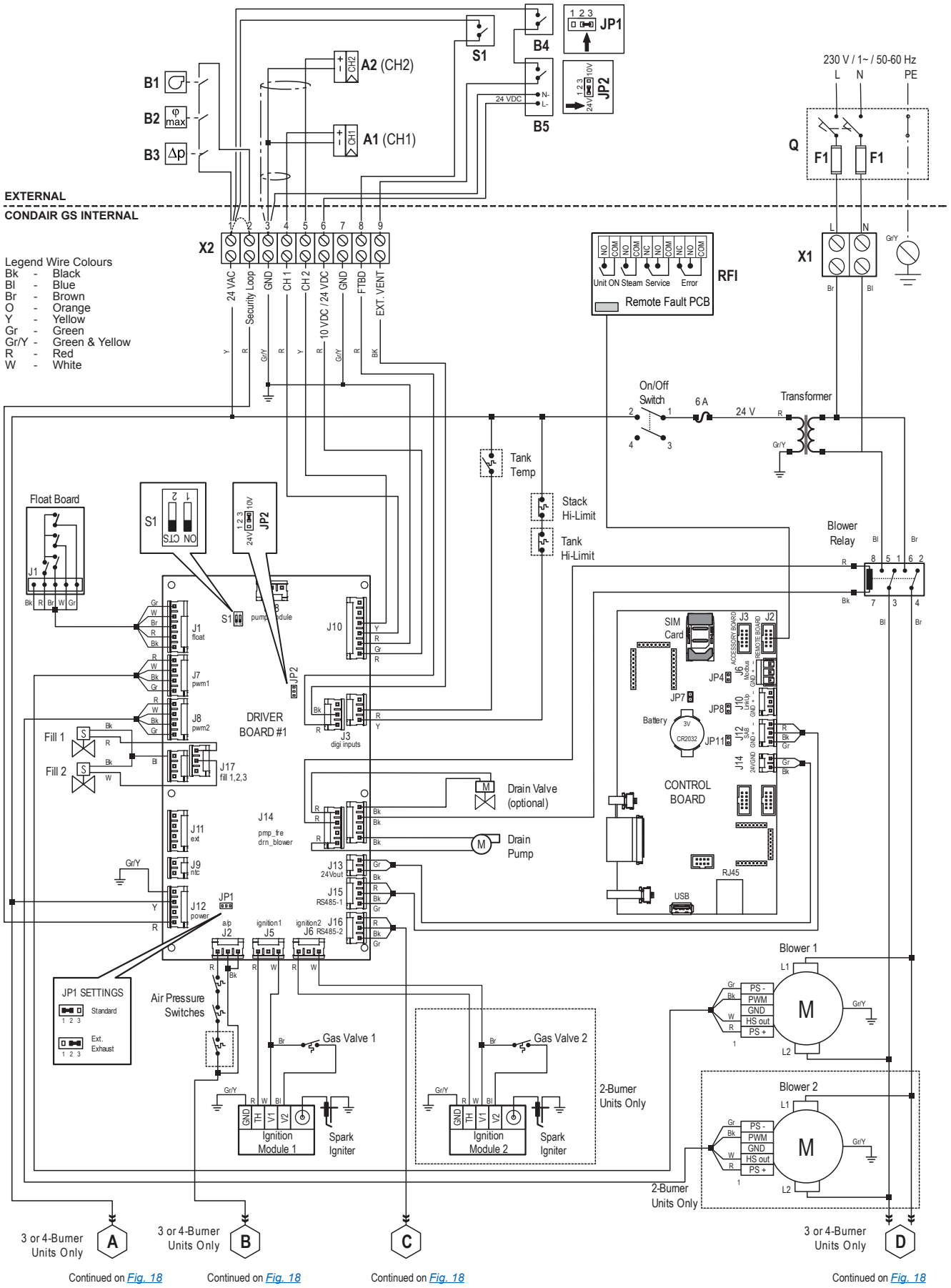

Fig. 17: Wiring Diagram - Condair GS 65/130/195/260

Supplementary Wiring Diagram Condair GS 195/260

Fig. 18 shows the supplementary wiring diagram for the GS 195 and GS 260. The connections are carried over from *Fig. 17 on page 28*.

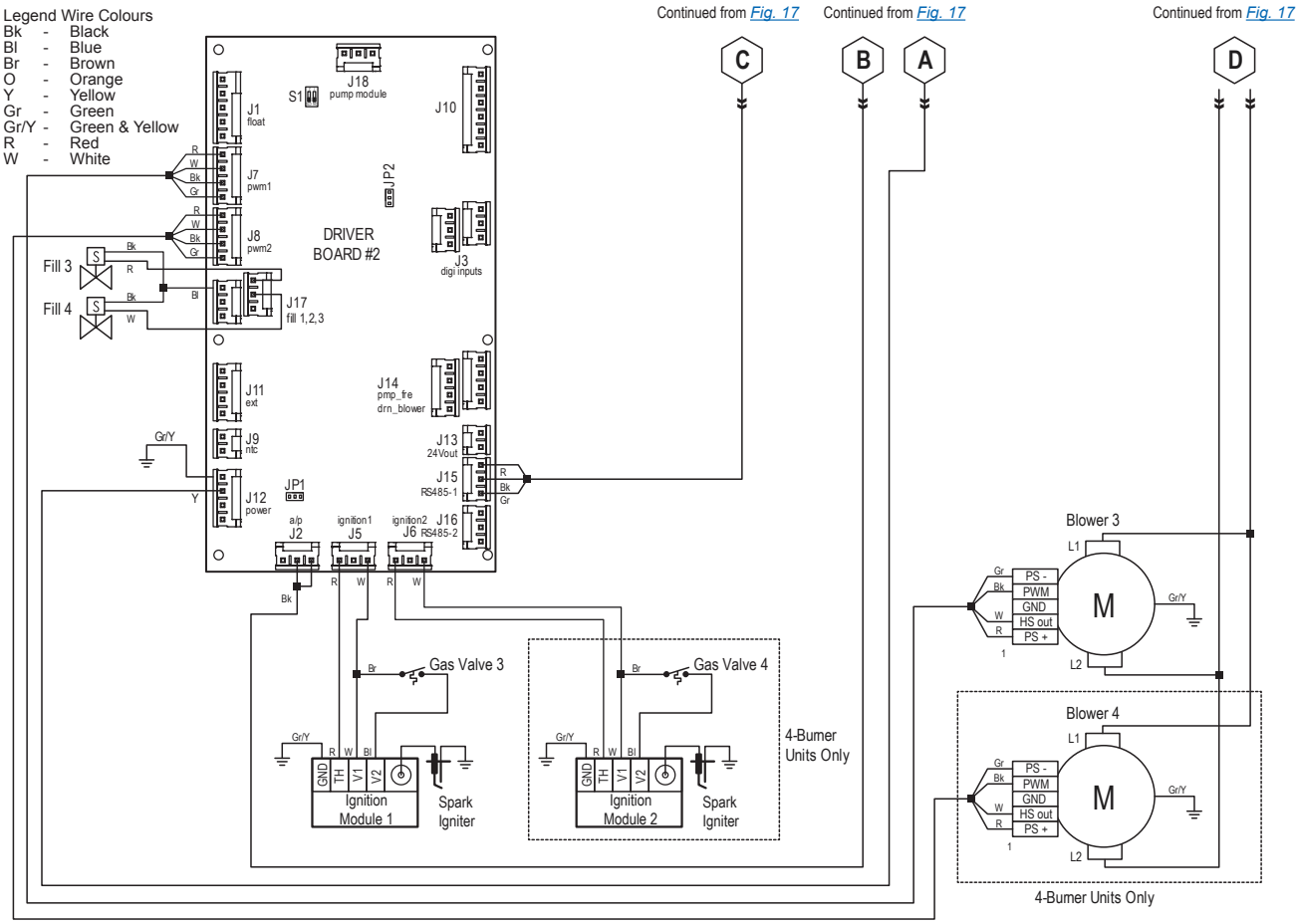

Fig. 18: Supplementary Wiring Diagram Condair GS 195/260

Legend Wiring Diagrams

A1 External humidity controller or humidity sensor (signal CH1)
A2 External humidity limiter controller or humidity limiter sensor (signal CH2), additional for Dual channel control
B1 Ventilation interlock (safety loop)
B2 Safety humidistat (safety loop)
B3 Air flow monitor (safety loop)
B4 Differential pressure switch exhaust gas management system (option)
B5 Air flow monitor exhaust gas management system (option)
F1 Fuses external disconnect switch
J6 Modbus connector (on control board)
J10 Linkup connector (on control board)
JP2 Jumper (on driver board)– for selecting the output voltage on terminal X2-6 (10 VDC or 24 VDC)
JP1 Jumper (on driver board) – for activating/deactivating the monitoring of the optional flue gas management system via terminal X2-9
JP4 Jumper (on control board) – for activating/deactivating the termination resistor for Modbus or BACnet MSTP network.
JP7 Jumper (on control board) – for activating/deactivating Modbus or BACnet MSTP communication via connector J6.
JP8 Termination Linkup system (on control board)
Q External fused disconnect switch
RFI Remote fault PCB
S1 Full tank blowdown switch
X1 Voltage supply terminal
X2 Low voltage terminal strip (controls)

6 Initial commissioning and operation

6.1 Initial commissioning

Initial commissioning must be carried out by a service engineer from your Condair representative. The customer must not perform the commissioning.

It is assumed that the optional exhaust gas management system has been installed correctly in accordance with the installation and operating instructions and the person entrusted with the commissioning has read and understood the installation and operating instructions for the optional exhaust gas management system of the Condair GS and the installation manual and operation manual of the Condair GS steam air humidifier.

Proceed as follows for initial commissioning:

1. Condair GS is switched off.
2. Set the **differential pressure switch** on the exhaust gas pipe to **-20 Pa** (see instructions for the differential pressure switch KS...C2).

Set value:	

3. Set the **flow monitor** in the exhaust air duct to **1m/s** (see instructions for the CDA flow monitor).

Set value:	

4. Connect the **pressure gauge** to the measurement connection in the exhaust gas pipe.
5. Turn the draught limiter weights anti-clockwise as far as they will go (see instructions for the draught limiter).
6. Start the **exhaust air system** and ramp up to **maximum power**.
7. Using the throttle valve set the **negative pressure to -100Pa** (check with a pressure gauge).
   Note: If the negative pressure in the exhaust gas pipe is more than -100 Pa in spite of the throttle valve being almost closed more draught limiters must first of all be installed.

Set value:	

8. Lower the exhaust air system to **minimum power**. The negative pressure in the exhaust gas pipe should remain at -100 Pa (check with a pressure gauge).

Measured value:	

Important: At minimum exhaust air output in the exhaust air duct there must be a minimum air volume flow of 50 m^3/h per kW of nominal power of the steam air humidifier. Please note the following key information with regard to this:

		Condair GS 23	Condair GS 45	Condair GS 65	Condair GS 90	Condair GS 130	Condair GS 195	Condair GS 260
Steam output	kg/h	23	45	65	90	130	195	260
Nominal output	kW	20.5	41.0	61.5	82.0	123.0	184.5	246.0
Min. air quantity	m^3/h	1025	2050	3075	4100	6150	9225	12300

The minimum amounts of air are reached in most exhaust air systems when the minimum speed in the exhaust air duct does not fall below 1m/s.
Note: The minimum speed in the exhaust air duct depends on the minimum air quantity and the cross section of the exhaust air. If you have any questions on this please contact your Condair representative.

Note: The draught limiter balances out the pressure fluctuations arising from the minimum and maximum exhaust air output. At minimum exhaust air output the draught limiter should be closed.

9. Start the steam air humidifier at 100% performance in accordance with the instructions in the operation manual of the Condair GS. The negative pressure in the exhaust gas pipe must not fall below -20 Pa at minimum exhaust air system output (check with a pressure gauge).
   Note: If you cannot start the steam air humidifier because the negative pressure in the exhaust gas pipe at start up falls below -20 Pa (differential pressure switch has triggered) the draught limiter weights must be moved clockwise until the negative pressure at start up no longer falls below -20 Pa. Then steps 5 - 7 must be repeated until the system is balanced and works without any problems in the permissible negative pressure range of -20 Pa to -100 Pa.
10. Seal the position of the throttle valve.

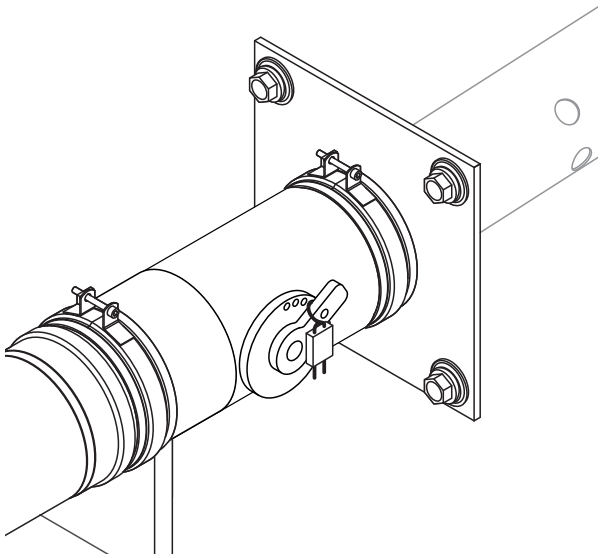

Fig. 19: Sealing the throttle valve

6.2 Operation

If the Condair GS steam air humidifier with the optional exhaust gas management system has been started up correctly as described in Chapter 6.1 the steam air humidifier can be operated normally from now on (see installation and operating instructions for the Condair GS). If the Condair GS cannot be started up or if there are problems while it is operating, follow the troubleshooting instructions in *chapter 7 on page 32*.

The differential pressure switch and the flow monitor monitor the operation of the DVGW-certified exhaust gas management system and ensure that the steam air humidifier can only be started up or operated when the negative pressure in the exhaust gas pipe is within the permitted range.

7 Trouble shooting

The table below shows faults that may occur when operating the Condair GS with the optional exhaust gas management system.

Fault/ Error message	Description of the fault	Troubleshooting
E138 **Over Temperature Fault**	The exhaust or tank safety sensor has exceeded the safety limit. The unit will not operate when this fault condition is active.	• The unit may be operating with an incorrect water level. This ssue may also be associated with improper operation of the float chamber or fill valves. • Exhaust vent may be blocked. Ensure that the exhaust vent is free of obstructions. Also verify that the drain line from the exhaust is free from obstructions. • Thermocouple wires may be damaged, or have kinks along their length. • There may be excess scale buildup on the coils of the primary heat exchanger. • Temperature of the water supply may be too high. The inlet water should not exceed 25 °C. Optimum performance obtained from inlet water under 21 °C.
W149 **AP Open**	Air proving switch is open while the humidifier is operating. Should the air proving switch open during operation, the controller will interrupt all ignition modules and activate the blowers at 100%. After a several seconds (predetermined at factory), the controller will attempt to restart humidification. Three consecutive W149 warnings result in a fault, E150.	• The air proving switch may be faulty or has been disconnected. • Check the wiring and tubing to the air proving switches. Check for suction in the pressure tubes. If the switch does not close, it may be defective and must be replaced. • Check the wiring between the air proving switches and connector J2 on the driver board. With the demand off, and the blower not operating, check for 24 VAC at pins 1 and 2 on connector J2. • There is a blockage at the inlet or exhaust that is causing high pressure in the system. This may cause “dirty” combustion. Check for and remove any blockages at the inlet and exhaust.
E153 **AP Exhaust Fault**	One or more of the external safety switches installed for the Exhaust in Duct feature have opened.	• Check for the proper installation of all safety switches, and verify that they have been wired correctly to the lowvoltage terminal. • Ensure that the air handling unit/ system is operational.

Notes

Notes

CONSULTING, SALES AND SERVICE:



CH94/0002.00

Condair Group AG
Gwattstrasse 17, 8808 Pfäffikon SZ, Switzerland
Phone +41 55 416 61 11, Fax +41 55 588 00 07
info@condair.com, www.condairgroup.com

condair