weboost
A WILSON ELECTRONICS BRAND

DRIVE 4G-X OTR

Cellular Booster For Trucks

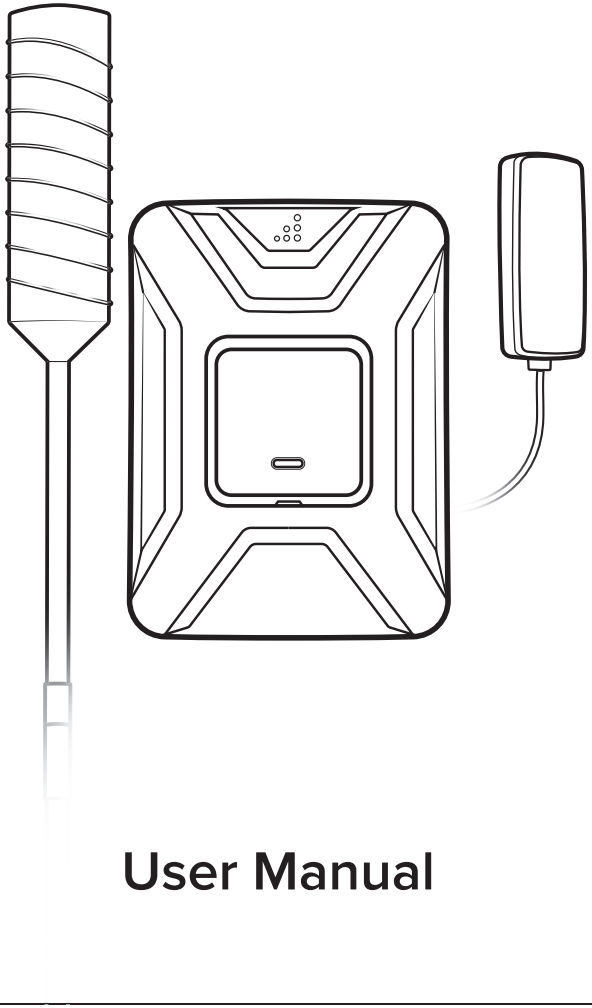

User Manual

NEED HELP? support.weboost.com 866.294.1660

Index

Package Contents ---- 1

STEP 1: Select Mounting Location ---- 2

STEP 2: Assemble The Antenna ---- 3

STEP 3: Mount Outside Antenna ---- 5

STEP 4: Mount Inside Antenna ---- 6

STEP 5: Connect Coax Cables To Booster ---- 7

STEP 6: Connect Power Supply To Booster ---- 8

STEP 7: Plug Power Adapter Into Vehicle's Power Supply ---- 9

Light Patterns ---- 10

Troubleshooting ---- 11

Safety Guidelines ---- 12

Specifications ---- 13

Warranty ---- 14

Package Contents

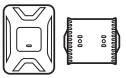

Booster
& Bracket



Outside
Antenna



Inside
Antenna

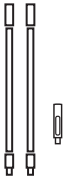

Mast Extensions
& Side Exit Adapter



Power
Supply



3- Way Antenna
Mount



Antenna
Spring



Thread Lock
Packets



Cable
Adapter

Step 1: Select Mounting Location

Select mounting location on vehicle. The antenna can be mounted in any CB mount or antenna mounting point on the vehicle. For best performance mount the antenna above the metal cab (it does not need to be above cab wind deflector).

Depending on the type of truck, there may be built-in antenna mounting points. If the vehicle does not have built-in mounting points, the antenna includes a three-way mount that will work on vehicles with mirror rails. The antenna will also work with third party CB antenna mounts.

NOTE: Mount at least 12 inches from any other antennas. Free of obstructions.

NOTE: If the vehicle is using two CB antennas co-phase wiring, removing one antenna will cause reduced performance of the remaining CB antenna.

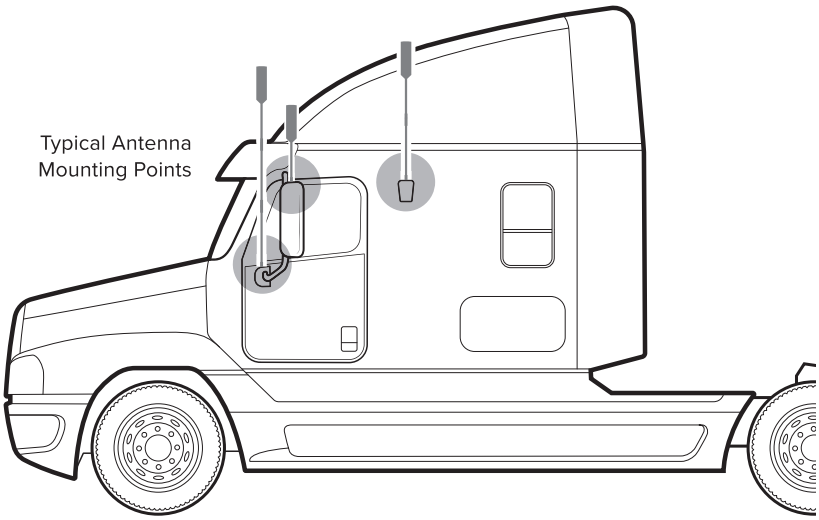

Step 2: Assemble The Antenna

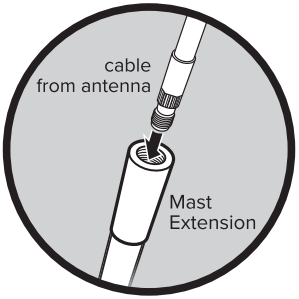

Once you have determined the best location for the antenna and have determined if Mast Extensions are needed, insert cable **through** mast.

NOTE: Mast Extensions may not be needed depending on your mounting point.

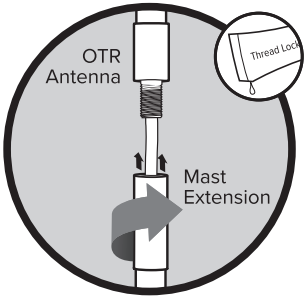

If using Mast Extension(s) add **thread locker** (packets provided) to thread point(s). Screw into place.

NOTE: Be sure the antenna is the correct height before applying thread locker.

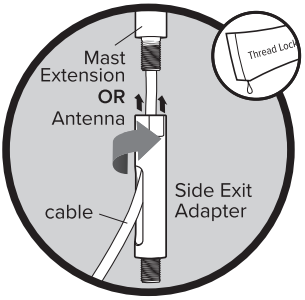

Add thread locker (packets provided) to thread point and screw on the **Side Exit Adapter.**

NOTE: When adding the side exit adapter hold the antenna vertically and screw the adapter from the bottom up. This reduces cable twisting.

(STEP 2 cont.)

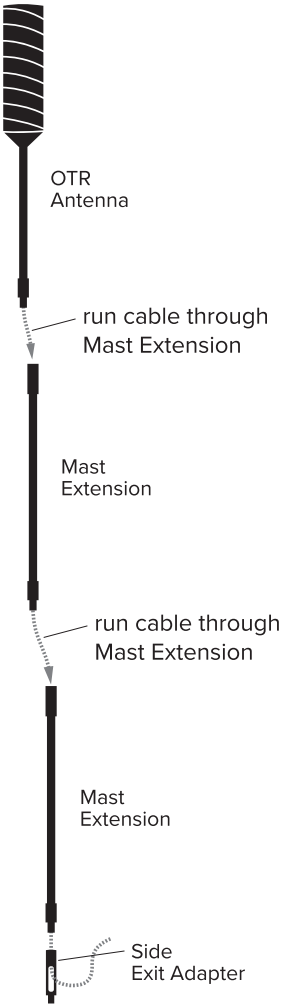

NOTE: The included spring should only be used on shorter masts variations.

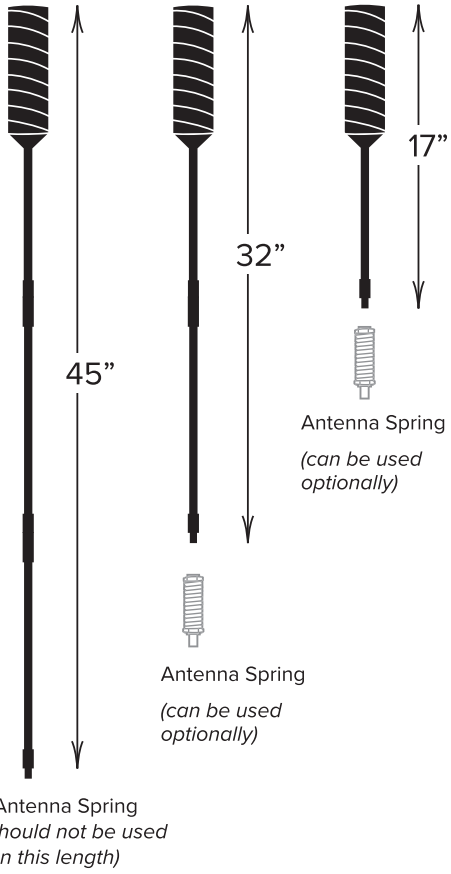

Step 3: Mount Outside Antenna

These are some **typical antenna mounting points**. If the vehicle does not have built-in mounting points, a three-way mount is included that will work on vehicles with mirror rails.

Upper Side

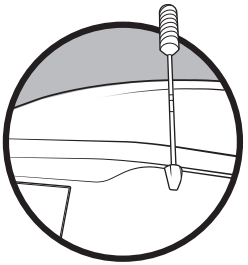

Top of mirror

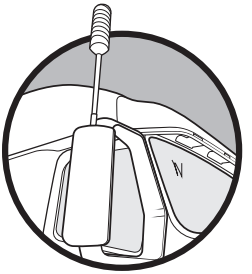

Mirror Arm

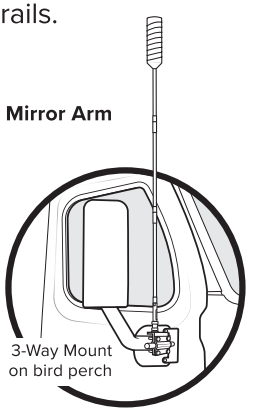

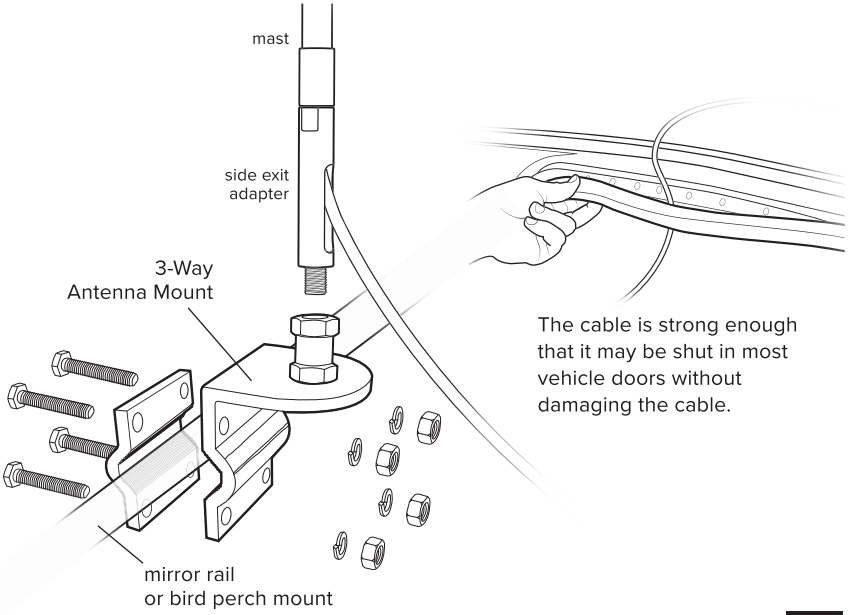

Step 4: Mount Inside Antenna

Identify a place to mount the 4G In-Vehicle Antenna, either on the side of the seat or on the dash and mount. The location should be at least 18 inches but no more than 36 inches from where the cellular device will be used. Use the Velcro® adhesive strip/adhesive strip provided and attach to desired location.

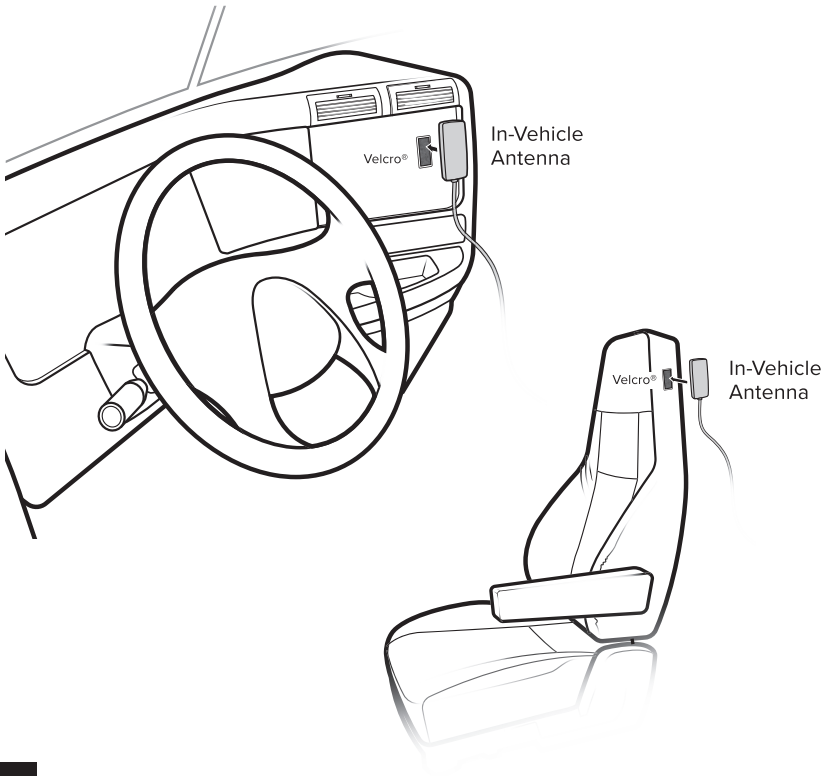

Step 5: Connect Coax Cables To Booster

Connect the cable from the Outside Antenna to the port labeled “Outside Antenna” on the Drive 4G-X booster.

NOTE: Bracket can be used to fasten booster in a specific location if desired.

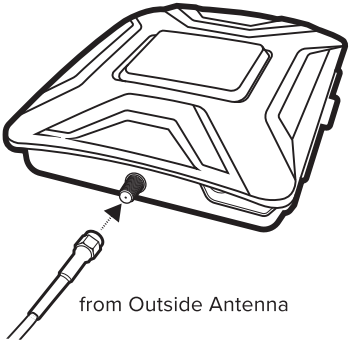

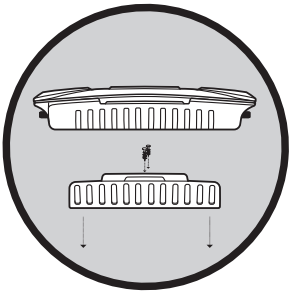

Connect the cable from the 4G In-Vehicle Antenna to the port labeled “Inside Antenna” on the booster.

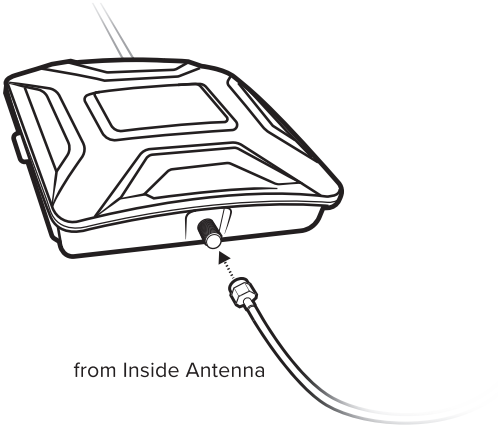

Step 6: Connect Power Supply To Booster

Connect the power supply cord to the end of the Drive 4G-X labeled “Power.”

NOTE: Do NOT connect the power to the Signal Booster until you have connected both cables from the Inside and Outside Antennas.

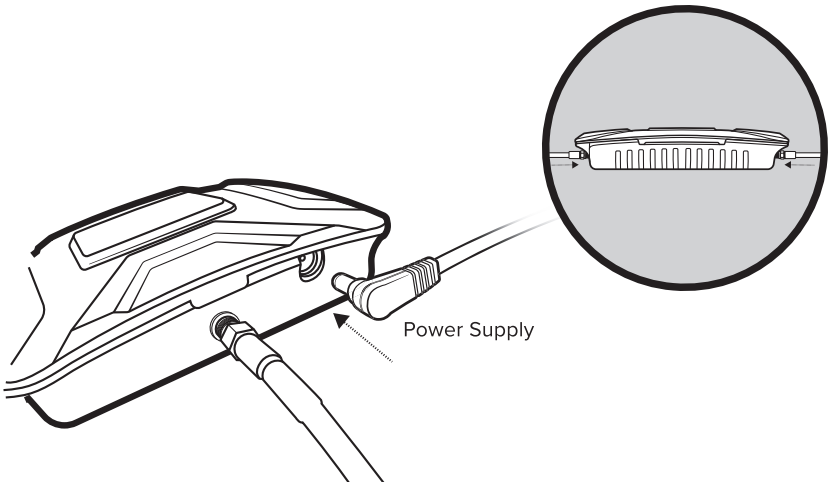

Step 7: Plug Power Adapter Into Vehicle's Power Supply

Plug the power adapter into vehicle's 12V DC power supply. Power up your Drive 4G-X by flipping the switch on the back of the DC power adapter on and and watch your signal increase!

NOTE: If your Drive 4G-X is working correctly, the light on the power adapter will be red, and the light on the booster will be green.

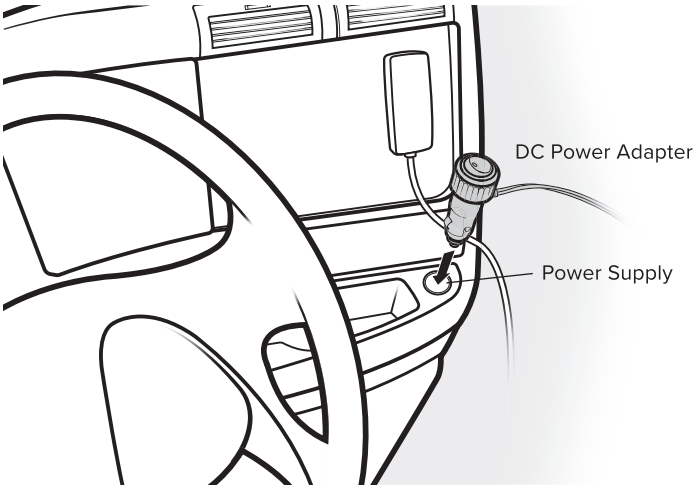

Light Patterns

Solid Green

This indicates that your booster is functioning properly and there are no issues with installation.

Blinking Red, Then Solid Green

This indicates that one or more of the booster bands has reduced power due to a feedback loop condition called oscillation. This is a built in safety feature to prevent harmful interference with a nearby cell tower. If you are already experiencing the desired signal boost, then no further adjustments are necessary. If you are not experiencing the desired boost in coverage then refer to the Troubleshooting section below.

Solid Red

This is due to a feedback loop condition called oscillation. This is a built in safety feature that causes a band to shut off to prevent harmful interference with a nearby cell tower. Refer to Troubleshooting section below.

Light Off

If the Drive 4G-X Signal Booster's light is off, verify your power supply has power.

NOTE: The Signal Booster can be reset by disconnecting and reconnecting the power supply.

After troubleshooting you must initiate a new power cycle by disconnecting and then reconnecting power to the Booster.

Troubleshooting

FIXING BLINKING OR SOLID RED ISSUES

This section is only applicable if the booster is red or blinking red and you are not experiencing the desired signal boost.

1. Unplug the Booster's power supply.
2. Relocate the inside and outside antenna further from each other. The objective is to increase the separation distance between them, so that they will not create this feedback condition discussed before.
3. Plug power supply back in.
4. Monitor the indicator light on your booster. If, after a few seconds of 'power on', a solid or blinking red light appears, repeat steps 1 through 3. Increase the separation distance until the condition is corrected and/or desired coverage area is achieved. Note: Horizontal separation of the two antennas typically requires a shorter separation distance than perpendicular separation.
5. If you are having any difficulties while testing or installing your booster, contact our weBoost Customer Support team for assistance (866.294.1660).

FREQUENTLY ASKED QUESTIONS

What hours can I contact customer support?
Customer Support can be reached monday thru friday by calling **866.294.1660**, or through our support site at support.**weboost**.com.

Why do I need to create distance between the booster and the antenna?
Antennas connected to a booster create spheres of signal. When these spheres overlap, a condition called oscillation occurs. Oscillation can be thought of as noise, which causes the booster to scale down it's power or shut down to prevent damage. The best way to keep these spheres of signal from overlapping is to maximize separation between the inside and outside antennas.

Safety Guidelines

Use only the power supply provided in this package. Use of a non-weBoost product may damage your equipment.

The Signal Booster unit is designed for use in an indoor, temperature-controlled environment (less than 150 degrees Fahrenheit). It is not intended for use in attics or similar locations subject to temperatures in excess of that range.

All inside panel and dome antennas must have at least 6' of separation distance from all active users, and low profile antennas must have at least 1.5' separation distance from all active users.

Connecting the Signal Booster directly to the cell phone with use of an adapter will damage the cell phone.

RF Safety Warning: Any antenna used with this device must be located at least 8 inches from all persons.

This is a CONSUMER device.

BEFORE USE, you **MUST REGISTER THIS DEVICE** with your wireless provider and have your provider's consent. Most wireless providers consent to the use of signal boosters. Some providers may not consent to the use of this device on their network. If you are unsure, contact your provider.

In Canada, **BEFORE USE** you must meet all requirements set out in ISED CPC-2-1-05. You MUST operate this device with approved antennas and cables as specified by the manufacturer. Antennas MUST be installed at least 20 cm (8 inches) from (i.e., MUST NOT be installed within 20 cm of) any person.

You **MUST** cease operating this device immediately if requested by the FCC (or ISED in Canada) or licensed wireless service provider.

WARNING. E911 location information may not be provided or may be inaccurate for calls served by using this device.

FOR MORE INFORMATION ON REQUIREMENTS SET OUT IN ISED CPC-2-1-05, SEE BELOW:

http://www.ic.gc.ca/eic/site/smt-gst.nsf/eng/sf08942.html

FOR MORE INFORMATION ON REGISTERING YOUR SIGNAL BOOSTER WITH YOUR WIRELESS PROVIDER, PLEASE SEE BELOW:

Sprint: http://www.sprint.com/legal/fcc_boosters.html

T-Mobile/MetroPCS: https://support.t-mobile.com/docs/DOC-9827

Verizon Wireless: http://www.verizonwireless.com/wcms/consumer/register-signal-booster.html

AT&T: https://securec45.securewebsession.com/attsignalbooster.com/

U.S. Cellular: http://www.uscellular.com/uscellular/support/fcc-booster-registration.jsp

Specifications

	Drive 4G-X				
Product Number	U470010				
Model Number	460021				
FCC ID:	PWO460021				
IC:	4726A-460021				
Connectors	SMA-Female				
Antenna Impedance	50 Ohms				
Frequency	699-716 MHz, 729-756 MHz, 777-786 MHz, 824-894 MHz, 1850-1995 MHz, 1710-1755 MHz/2110-2155 MHz				
	Maximum Power				
Power output for single cell phone (Uplink) dBm	700 MHz Band 12/17 24.84	700 MHz Band 13 24.35	800 MHz Band 5 23.4	1700 MHz Band 4 21.3	1900 MHz Band 2 24.43
Power output for single cell phone (Downlink) dBm	700 MHz Band 12/17 2.87	700 MHz Band 13 2.79	800 MHz Band 5 2.8	2100 MHz Band 4 2.0	1900 MHz Band 2 1.92
Noise Figure	5 dB nominal				
Isolation	> 90 dB				
Power Requirements	6 V 2 A				

The term “IC” before the radio certification number only signifies that Industry Canada technical specifications were met.

Each Signal Booster is individually tested and factory set to ensure FCC compliance. The Signal Booster cannot be adjusted without factory reprogramming or disabling the hardware. The Signal Booster will amplify, but not alter incoming and outgoing signals in order to increase coverage of authorized frequency bands only. If the Signal Booster is not in use for five minutes, it will reduce gain until a signal is detected. If a detected signal is too high in a frequency band, or if the Signal Booster detects an oscillation, the Signal Booster will automatically turn the power off on that band. For a detected oscillation the Signal Booster will automatically resume normal operation after a minimum of 1 minute. After 5 (five) such automatic restarts, any problematic bands are permanently shut off until the Signal Booster has been manually restarted by momentarily removing power from the Signal Booster. Noise power, gain, and linearity are maintained by the Signal Booster's microprocessor.

This device complies with Part 15 of FCC rules. Operation is subject to two conditions: (1) This device may not cause harmful interference, and (2) this device must accept any interference received, including interference that may cause undesired operation. Changes or modifications not expressly approved by weBoost could void the authority to operate this equipment.

2 YEAR WARRANTY

weBoost Signal Boosters are warranted for two (2) years against defects in workmanship and/or materials. Warranty cases may be resolved by returning the product directly to the reseller with a dated proof of purchase.

Signal Boosters may also be returned directly to the manufacturer at the consumer's expense, with a dated proof of purchase and a Returned Material Authorization (RMA) number supplied by weBoost. weBoost shall, at its option, either repair or replace the product.

This warranty does not apply to any Signal Boosters determined by weBoost to have been subjected to misuse, abuse, neglect, or mishandling that alters or damages physical or electronic properties.

Replacement products may include refurbished weBoost products that have been recertified to conform with product specifications.

RMA numbers may be obtained by contacting Customer Support

DISCLAIMER: The information provided by weBoost is believed to be complete and accurate. However, no responsibility is assumed by weBoost for any business or personal losses arising from its use, or for any infringements of patents or other rights of third parties that may result from its use.

Notes

NEED HELP? support.weboost.com 866.294.1660

Notes

NEED HELP? support.weboost.com 866.294.1660

Notes

NEED HELP? support.weboost.com 866.294.1660

weboost

3301 East Deseret Drive, St. George, UT

866.294.1660 www.weboost.com support.weboost.com

Copyright © 2017 weBoost. All rights reserved.
weBoost products covered by U.S. patent(s) and pending application(s)
For patents go to: weboost.com/us/patents

NOT AFFILIATED WITH WILSON ANTENNA

GDE000072_Rev01_05.23.18