Rinnai

SYMMETRY®

Gas Log Flame Fire
Operation / Installation Manual

MODELS: RDV3610ETR, RDV3611ETR

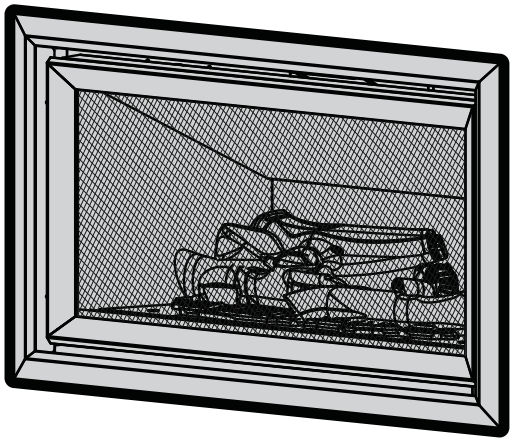

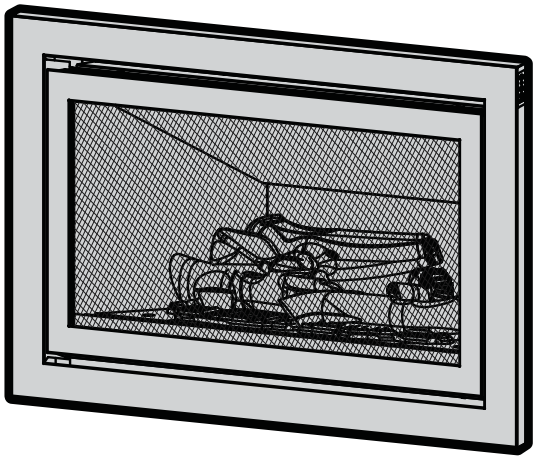

This appliance shall be installed in accordance with:

- **Manufacturer's Installation Instructions**
- **Current AS/NZS 3000 & AS/NZS 5601**
- **Local Regulations and Municipal Building Codes**

This appliance must be installed, serviced and repaired by an Authorised Person.

The Australian Gas Association
All Rinnai gas products are A.G.A. certified.

N10378

Congratulations on the purchase of your
Symmetry Heater.
We trust you will have many years of enjoyment from your appliance.

THIS MANUAL CONTAINS IMPORTANT INFORMATION. FOR SAFETY PLEASE READ CAREFULLY BEFORE PROCEEDING WITH ASSEMBLY, INSTALLATION AND OPERATION OF YOUR NEW FLAME FIRE AND GAIN A FULL UNDERSTANDING OF THE APPLIANCE.

INSTALLATION REQUIREMENTS

This heater must be installed by an authorised person. The installation must conform to local regulations.

The installation must also comply with the instructions supplied by Rinnai.

Service and removal must be carried out by an authorised person.

DO NOT modify this appliance.

CERTIFICATION

The Rinnai Symmetry® has been certified by the Australian Gas Association.

The AGA Certification Number is shown on the appliance dataplate.

No parts or functions should be modified or permanently removed from the heater.

Please keep these instructions in a safe place for future reference.

CARTON CONTENTS

For **RDV3610ETR** *check you have the following:*

1 x Rinnai 'Symmetry'® Heater.
1 x Surround (attached with 4 black screws).
1 x Operation and Installation Manual.
1 x Artificial Log Set / Burn Media (Inside appliance).
1 x Mesh Safety Guard.
2 x Lintel Spacers (attached with 4 x 8g x 8mm long self tapping pan head screws.
4 x securing brackets with 16 x 8g x 8mm long self tapping pan head screws.
1 x RF Combination Remote and Thermostatic Control with wall mount and securing screws.
2 x 'AA' Batteries.
1 x Flue Baffle with 2 x 8g x 8mm long self tapping pan head screws.

For **RDV3611ETR** *Check you have the following:*

Carton 1

1 x Rinnai 'Symmetry'® Heater.
1 x Operation and Installation Manual.
1 x Artificial Log Set / Burn Media (Inside appliance).
2 x Lintel Spacers (attached with 4 x 8g x 8mm long self tapping pan head screws.
4 x securing brackets with 16 x 8g x 8mm long self tapping pan head screws.
1 x RF Combination Remote and Thermostatic Control with wall mount and securing screws.
2 x 'AA' Batteries.
1 x Flue Baffle with 2 x 8g x 8mm long self tapping pan head screws.
1 x Pack4 x 8g x 8mm long self tapping pan head screws (for outer surround).
1 x Cladding support bracket.

Carton 2

1 x Outer Surround
1 x Inner Frame
1 x Mesh Safety Guard
1 x RJ45 Extension Cable (For use with Square Fascia Models only)
1 x Front Fascia
1 x Screw Pack 12 pcs 8g x 3/8" Black
1 x Manual Switch Blanking Label (when using Square Fascia Models only)

TABLE OF CONTENTS - OPERATION

INSTALLATION REQUIREMENTS ..... **ii**
CARTON CONTENTS ..... **ii**
CERTIFICATION ..... **ii**
INSTALLATION RECORD **1**
ABOUT YOUR HEATER **2**
FRONT LAYOUT 2
SAFETY **4**
SAFETY DEVICES 7
ABOUT YOUR CONTROLLER **8**
TO TURN YOUR HEATER ON 8
FLAME HEIGHT & FAN SPEED SETTINGS 8
TO TURN YOUR HEATER OFF 8
INTERRUPTION TO ELECTRICITY OR GAS SUPPLY DURING OPERATION 8
RESTART PROCEDURE AFTER INTERRUPTION TO ELECTRICITY SUPPLY 8
RESTART PROCEDURE AFTER INTERRUPTION TO GAS SUPPLY 8
REMOTE / THERMOSTAT CONTROL **9**
DISPLAY LAYOUT & FEATURES 9
BUTTON LAYOUT & FEATURES 9
REMOTE CONTROLLER - BATTERY INSTALLATION 10
REMOTE CONTROLLER - SYNCHRONISATION. 10
REMOTE CONTROLLER - MANUAL OPERATION 10
REMOTE CONTROLLER - AUTOMATIC OPERATION 11
WIRELESS CONTROLLER / THERMOSTAT 12
TO TURN YOUR HEATER ON WITH REMOTE / THERMOSTATIC CONTROL 14
MODES OF OPERATION 14
PROGRAMMING OF PROGRAM MODES 16
CUSTOMER INFORMATION - OPERATION **18**
MODES OF OPERATION 18
TO TURN REMOTE ‘ON’ or ‘OFF’ 18
MANUAL TEMPERATURE MODE 18
AUTOMATIC TIMER MODE 18
FLAME MODE 18
MANUALLY OVERRIDING THE SET PROGRAM 18
PROGRAM MODES 18
FLAME HEIGHT AND FAN SPEED 18
FLASHING SMALL FLAME SYMBOL ‘ON’ 18
HOW TO OPERATE YOUR HEATER **19**
TO BEGIN PROGRAMMING 19
MANUAL SWITCH MODE 21
LOSS OF REMOTE CONTROL FUNCTION 21
TO REGAIN REMOTE CONTROL 21
GAS SUPPLY DISRUPTION 21
POWER DISRUPTION 21
CARE AND MAINTENANCE **22**
GENERAL OPERATION CHARACTERISTICS 22
SERVICE 22
TROUBLE SHOOTING **23**
TROUBLE SHOOTING CHECKLIST 23
ABNORMAL FLAME PATTERN 23
TABLE OF CONTENTS - INSTALLATION **24**
CONTACT INFORMATION **44**

INSTALLATION RECORD

INSTALLERS / GAS FITTERS DETAILS

Installers Name: _____

Company Name: _____

Company Address: _____

_____

_____

Company Contact Details

Telephone: _____

Mobile Phone: _____

Certificate of Compliance / Certification Number: _____

Authorised Persons - Licence Number: _____

Installers Signature: _____

Installation Date: _____

APPLIANCE DETAILS

Model Number: _____

Serial Number: _____

Installation Address: _____

_____

_____

_____

ABOUT YOUR HEATER

RDV-3610ETR / RDV-3611ETR (N/L)

Bevelled Fascia

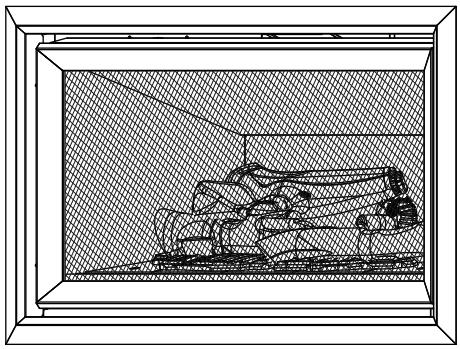

Square Fascia

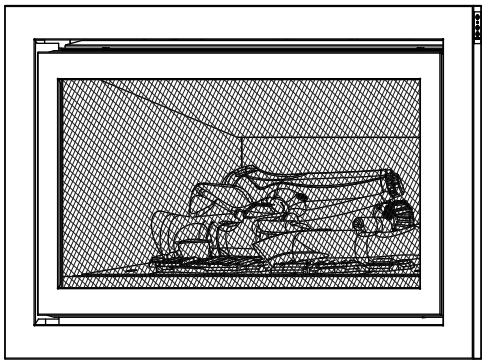

FRONT LAYOUT

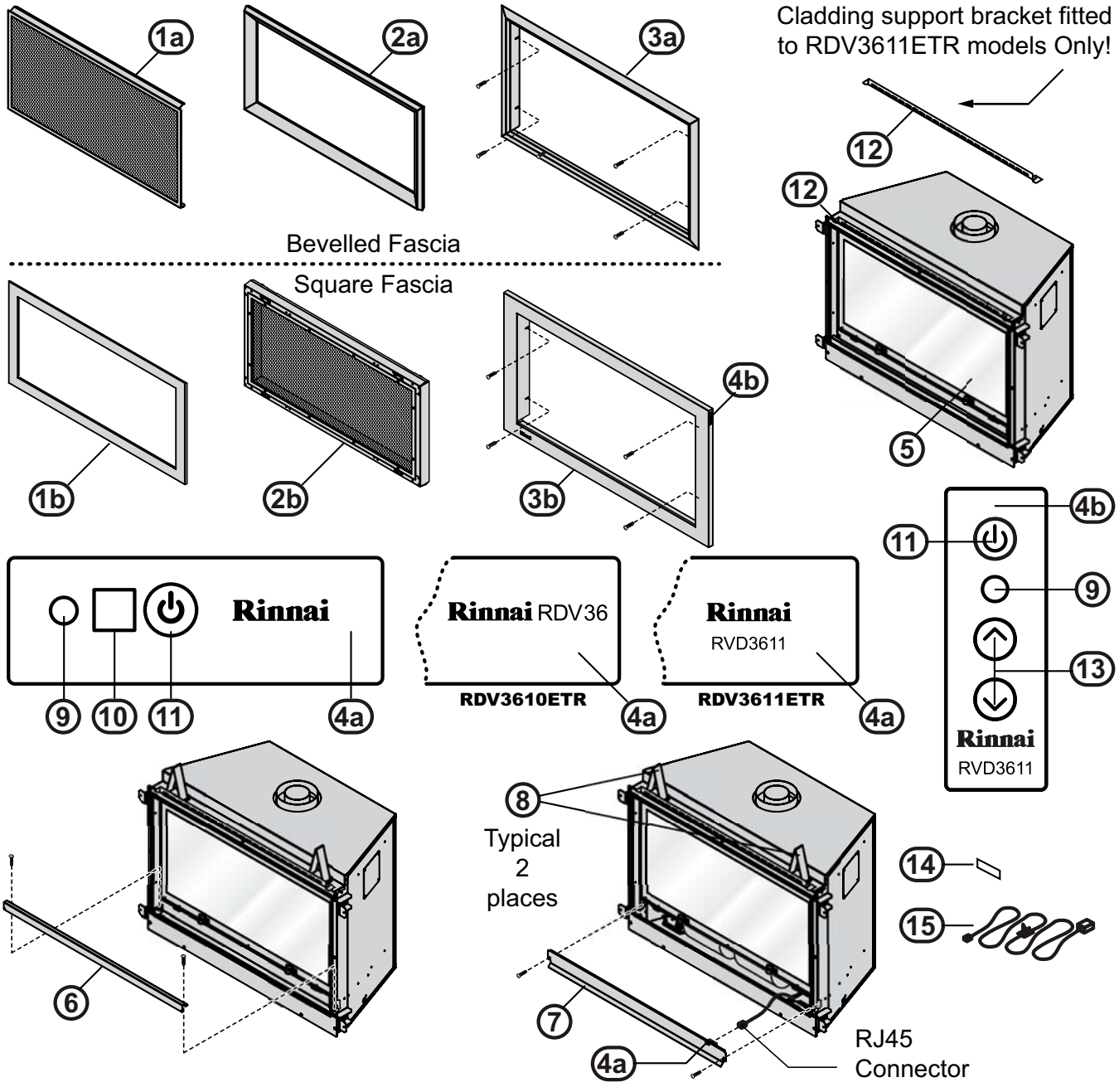

ABOUT YOUR HEATER

Unit Features			
1a	Bevelled Fascia Mesh Dress Guard	7	Manual Control Switch Panel ***(Removal by qualified persons Only!)***
1b	Square Fascia Mesh Dress Guard Frame	8	Lintel Stand-Off Brackets
2a	Bevelled Fascia Mesh Dress Guard Frame	9	LED Power Indicator
2b	Square Fascia Mesh Dress Guard	10	Remote Sensor Receiver
3a	Bevelled Fascia Surround	11	'ON' / 'OFF' Button
3b	Square Fascia Surround	12	Cladding Support Bracket ***(Fitted to RDV3611ETR Models Only!)***
4a	Bevelled Fascia Manual Control Switch	13	Flame Increase / Flame Decrease ***(Square Fascia Models Only!)***
4b	Square Fascia Manual Control Switch	14	Bevelled Fascia Manual Control Switch Cover ***(For use with Square Fascia Models)***
5	Glass Panel Assembly	15	RJ45 Extension Cable ***(For use with Square Fascia Models and is to be installed by qualified persons Only!)***
6	Lower Horizontal Cover Panel ***(Removal by qualified persons Only!)***		

Exchanging an existing Bevelled Fascia with a Square Fascia



Wiring inside this appliance may be at 240V potential.Qualified persons only must carry out the exchange.

Power must be turned off to the appliance and the appliance electrically isolated.



Failing to electrically isolate the appliance increases the risk of electric shock from exposed wiring and circuitry when cover panels are removed.

DO NOT leave the appliance unattended when power is connected and the panels are removed.

SAFETY

WARNING

- **Failure to comply with these instructions could result in a fire or explosion, which could cause serious injury, death or property damage.**
- **Improper installation, adjustments, service or maintenance can cause serious injury, death or property damage. Such work must be performed by an authorised person.**
- **The appliance must be installed in accordance with the local gas and electrical authority regulations.**
- **Flue terminal must always vent directly to outdoors.**
- **DO NOT extend the flue vertically or horizontally in ways other than prescribed in the appliance manufacturers's installation instructions.**
- **For information on gas consumption, see data plate on the appliance.**
- **This appliance must not be installed where curtains or other combustible materials could come into contact with it. In some cases curtains may need restraining.**
- **WARNING: This heater must not be used if the glass panel is damaged.**
- **Minimum clearances during operation as follows:**

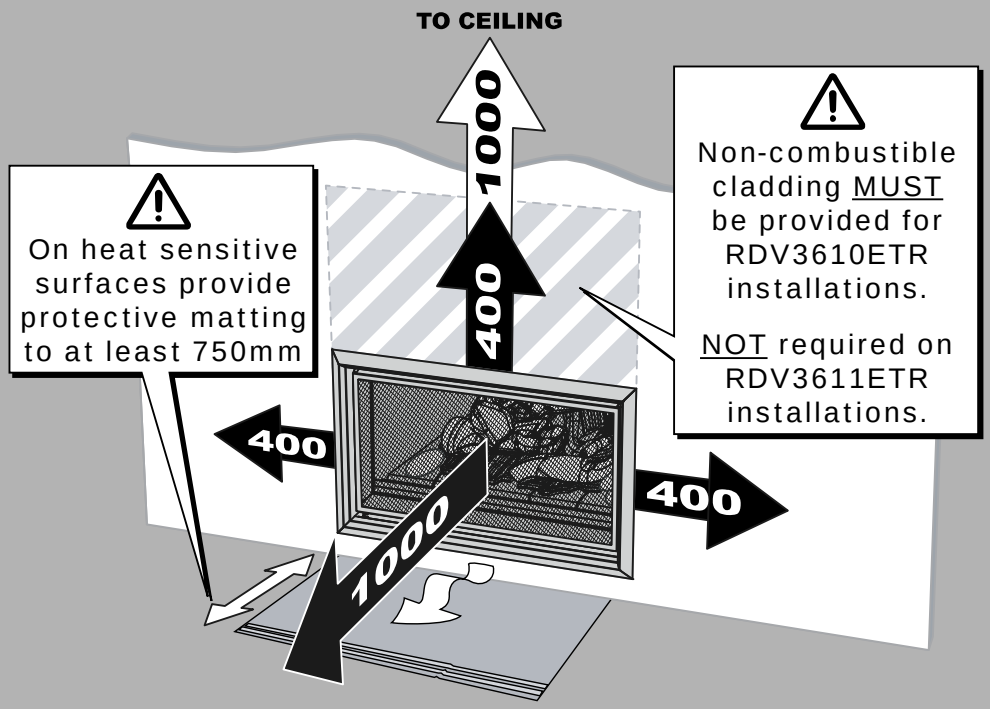

- **Heat emanating from the front of this heater may over time affect the appearance of some materials used for flooring such as carpet, vinyl, cork or timber. This effect may be amplified if the air in the room contains cooking vapours or cigarette smoke. To avoid this possibility, it is recommended that a mat be placed in front of the appliance, extending at least 750 mm in front of the air outlet.**
- **This appliance is not intended for use by persons (including children) with reduced physical, sensory or mental capabilities or lack of experience and knowledge, unless they have been given supervision or instruction concerning use of the appliance by a person responsible for their safety.**
- **Young Children must be supervised when in the vicinity of this heater while it is in operation.**
- **The Mesh Dress Guard MUST be fitted to this appliance to reduce the risk injury from burns and no part of it should be permanently removed.**
- **For protection of young children or the infirm a secondary guard is required.**

SAFETY

WARNING

- **If the supply cord is damaged or requires replacing, it must be replaced by the manufacturer or the manufacturer's agent or similarly qualified person in order to avoid a hazard.**
- **Heater must not be located immediately below a power socket outlet.**
- **DO NOT connect to an LPG Gas cylinder indoors.**
- **A dedicated 240 V earthed 10 Amp power point must be used with this appliance.**
- **The appliance is not intended for use by young children or infirm persons without supervision.**
- **DO NOT modify this appliance. Modifying from original specifications may create a dangerous situation and will void your warranty.**
- **Only the flue components specified by Rinnai must be used**.

Unpack the heater and check for damage. DO NOT INSTALL DAMAGED HEATER. If the heater is damaged, contact your supplier for advice. Before installing the heater, check the label for the correct gas type (refer rating plate, inside the appliance).

Remove shipping clamps on bottom edge of appliance before attempting to lift heater.

Refer to local gas authority for confirmation of the gas type if you are in doubt.

SAFETY

The appliance is not intended for use by young children or infirm persons without supervision. Young children should always be supervised to ensure that they DO NOT play with the appliance. DO NOT allow children or elderly persons to sleep in the warm air discharge from the heater. DO NOT sit or lean against the heater.	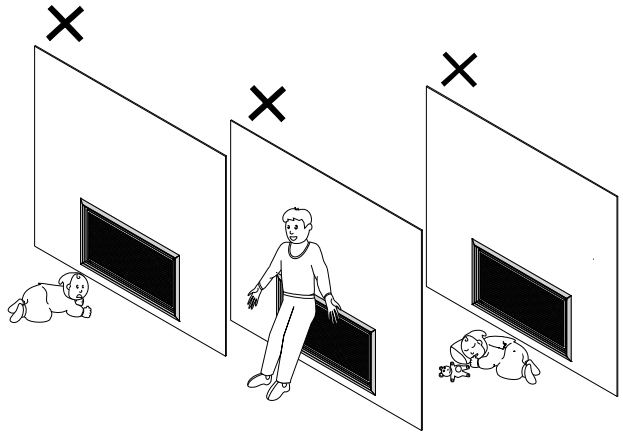
DO NOT post or allow children to post articles into the louvres of the heater. DO NOT cover or place articles on this heater. DO NOT place articles in front of the louvres.	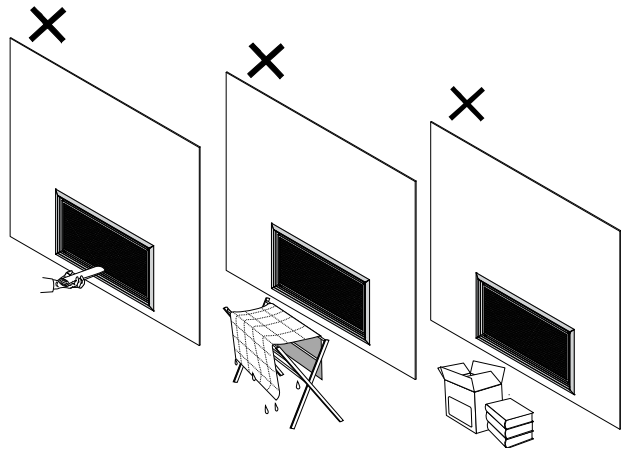
DO NOT operate / install this heater in areas where painting is taking place, or in places such as hairdressing salons, where there may be fluff and dust, and where aerosols are used. DO NOT place articles on or against this appliance. DO NOT use or store flammable materials near this appliance. Keep flammable materials away from heater. Combustible materials must not be placed where the heater could ignite them. DO NOT spray aerosols in the vicinity of this appliance while it is in operation. Most aerosols contain butane gas which can be a heater hazard if used near this heater when it is in use.	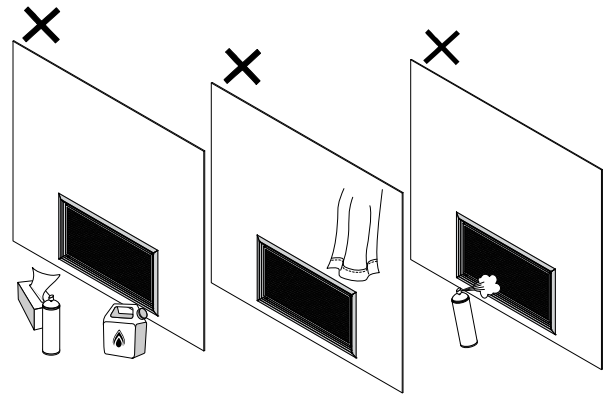
Snow Areas - in areas subject to heavy snowfall, keep snow clear of flue terminal at all times. Keep flammable materials, trees shrubs etc. away from the flue terminal.	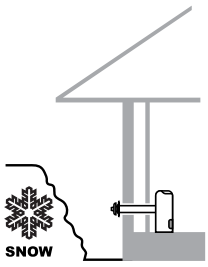

SAFETY

A dedicated 240V earthed 10 Amp power point must be used with this appliance.

DO NOT use power boards or double adaptors to operate this appliance. Heater MUST NOT be located below a power socket-outlet.

DO NOT place containers of liquid on top of the heater. Water spillage can cause extensive damage to the appliance and create an electrocution hazard.

DO NOT place articles on or against this appliance.

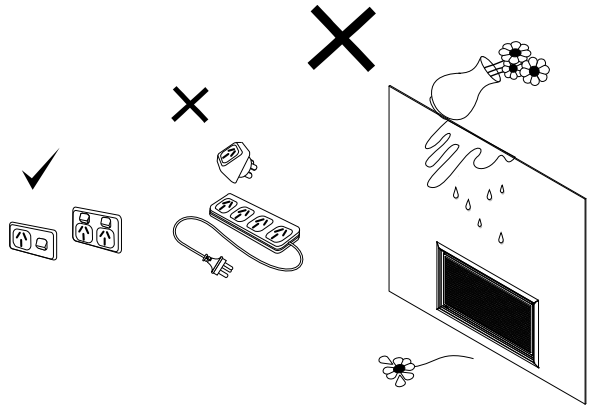

Turn the heater 'OFF' after use.

DO NOT unplug the heater while it is in operation or while the fan is still cycling.

Heat emanating from the front of the appliance may over time affect the appearance of some materials used for flooring such as carpet, vinyl, cork or timber. This effect may be amplified if the air in the room contains cooking vapours or cigarette smoke. To avoid this possibility, it is recommended that a mat be placed in front of the appliance, extending at least 750 mm in front of the heater.

When the heater is operated for the first time or after long periods of non use a slight odour may be emitted, this is normal. However if odours persist switch 'OFF' the appliance and contact Rinnai.

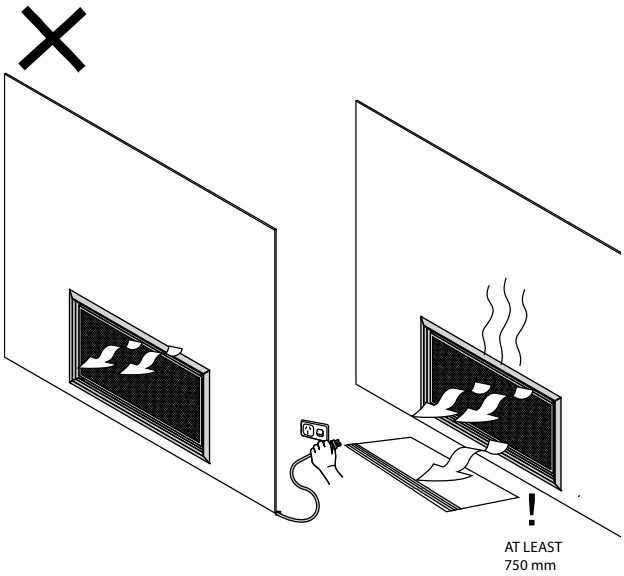

SAFETY DEVICES

- **Over Heat Switches**

  When the heater gets too hot during operation (for example when air outlet louvres are blocked) these devices turn the gas off automatically and allow the heater to restart when cooled down.

- **Electrical Fuse**

  The electrical circuits are protected by a fuse.

- **Flame Failure Sensing System**

  This device automatically cuts off the gas supply to the heater in the event of a flame failure.

- **Power Failure**

  In the event of a power failure or power cut, the gas valves will automatically close. The remote control/ thermostat will restart the appliance at the next programmed time period.

ABOUT YOUR CONTROLLER

TO TURN YOUR HEATER ON

BEFORE PROCEEDING ENSURE THE GAS AND ELECTRICITY ARE TURNED ON.

When the heater is in the OFF condition (the power supply connected and switched ON but the heater turned OFF) the Power Indicator will be extinguished, this is normal.

The 'Push Button Control Panel' is located at the top left edge of the heater.

Step 1. Press 'ON'/'OFF' button **a** once. The electronic ignition sparker will be able to be heard.

Step 2. The electronic ignition stops when the pilot flame has been established, the main burner then ignites off the pilot and is automatically preset to Stage 7 - High Flame. The LED Power Indicator, **b** will be constantly illuminated indicating heater is in operation.

Step 3. Flame height may be adjusted after 1 minute of operation. To change the burner and fan settings press **c** to increase flame height and **d** to decrease flame height.

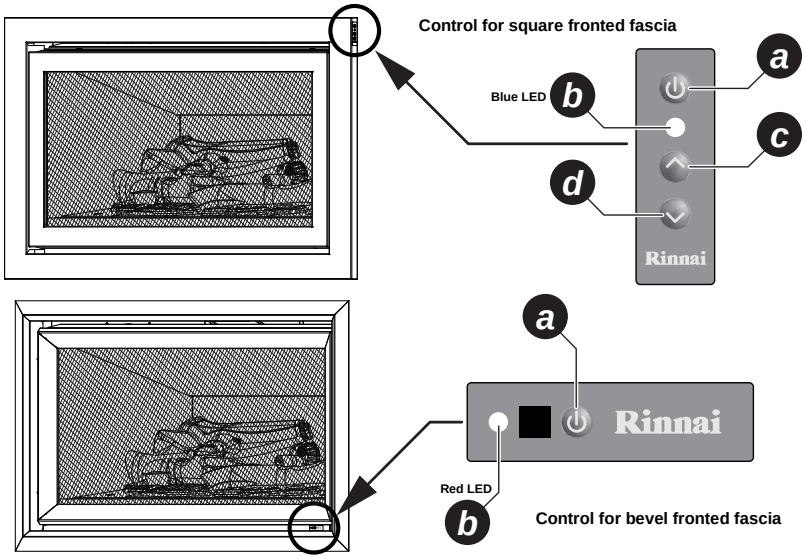

FLAME HEIGHT & FAN SPEED SETTINGS

The relationship between the flame height and fan speed are preset and can not be independently adjusted.

FLAME HEIGHT	1	2	3	4	5	6	7
FAN SPEED	HIGH	LOW	LOW	LOW	HIGH	HIGH	HIGH

TO TURN YOUR HEATER OFF

When the heater is in the OFF/STANDBY condition (power supply connected and switched ON) the LED Power Indicator will be extinguished. This is normal.

To turn the heater 'OFF' press the 'ON'/'OFF' Button **a** once. The LED Power Indicator **b**, will extinguish to indicate that the appliance has returned to the in OFF condition.

INTERRUPTION TO ELECTRICITY OR GAS SUPPLY DURING OPERATION

Interruption to the power or gas supply will turn your heater off. Restart will be required This is a safety feature designed to ensure that un-attended starts do not occur.

RESTART PROCEDURE AFTER INTERRUPTION TO ELECTRICITY SUPPLY

To restart your heater once power has been restored follow the steps for "TO TURN YOUR HEATER ON" above.

RESTART PROCEDURE AFTER INTERRUPTION TO GAS SUPPLY

The instant gas supply is interrupted the heater will attempt re-ignition for a period of 60 seconds.

If the heater has not re-lit after 60 seconds the gas control will go to 'Gas Lock-out'. The convection fan will remain on for 4 minutes to cool the appliance.

To restart your heater once gas has been restored:

Step 1. Ensure gas supply has been re-established to heater.

Step 2. To re-set the gas control turn 'OFF' the heater by pressing 'ON/OFF' button **a** once.

Step 3. In rapid succession Press button **a**, 3 times. (Turn 'ON', then 'OFF', then 'ON' again), within a 5 second period.

REMOTE / THERMOSTAT CONTROL

For further enhanced comfort and convenience the Symmetry heater can be both remotely and thermostatically controlled through the use of a wireless wall mountable controller / thermostat.

The wireless controller / thermostat is an optional extra available through your Rinnai stockist.

DISPLAY LAYOUT & FEATURES

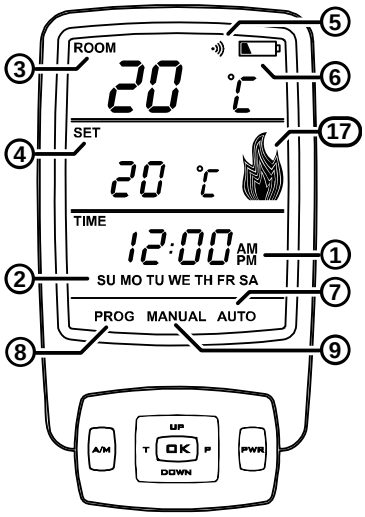

①	Time of day with **'AM'** or **'PM'** display	Displays time of the day in hours and minutes, 'AM' or 'PM'. The time is displayed when the thermostat is 'ON' or 'OFF'.
②	Day of the week	Displays the current day of the week. The day is displayed when the thermostat is 'ON' or 'OFF'.
③	Current Room temperature display	Displays the current temperature. The temperature range is 7°C - 32°C.
④	Setting Temperature with **'SET'** display	When the thermostat is 'ON', the programmed (set) temperature will be displayed.
⑤	Transmit indicator	Indicates that the thermostat is transmitting to the receiver, the symbol will appear on the LCD for 1 sec.
⑥	Battery Low indicator	Indicates when the battery power is below an acceptable level.
⑦	Automatic mode indicator	Indicates if the thermostat is in automatic mode.
⑧	Program mode indicator	Indicates that the thermostat is in programming mode.
⑨	Manual mode indicator	Indicates if the thermostat is in manual mode.

BUTTON LAYOUT & FEATURES

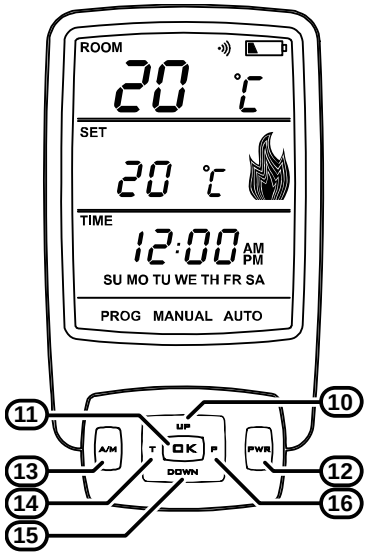

⑩	Setting **'UP'** Button	Increase hours, minutes, day or temperature.
⑪	**'OK'** Button	Accepts the current function and advances to the next function.
⑫	**'PWR'** (Power) Button	Switches the thermostat 'ON' and 'OFF'. To turn 'ON' press and release the **'PWR'** and **'OK'** Buttons at the same time this will turn the thermostat 'ON' to the most recently programmed working mode.
⑬	**'A/M'** Button	Toggles between automatic, manual and flame mode.
⑭	**'T'** (Time) Button	Initiates time and day of the week programming (must press and hold for 2 or more seconds when the thermostat is 'OFF').
⑮	Setting **'DOWN'** Button	Decrease hours, minutes, day or temperature.
⑯	**'P'** (Program) Button	Initiates the programming mode (must press and hold for 2 or more seconds when the thermostat is 'OFF').
⑰	Flame Indicator	Indicates the flame setting. The Flame symbol graphically indicates which of the 7 graduated settings between Low and High flame when the burner is on. In AUTO or MANUAL temperature mode, if the burner is OFF due to room temperature being reached the symbol will modulate UP and DOWN. This is to indicate that the unit is still ON even though there are no flames visible in the appliance.

REMOTE / THERMOSTAT CONTROL

REMOTE CONTROLLER - BATTERY INSTALLATION

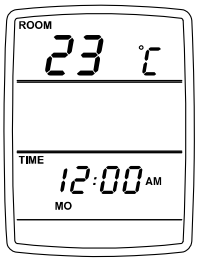

Carefully remove the battery compartment cover panel from the rear of your controller hand-set and insert the two AA batteries supplied ensuring that '+' and '-' polarity is correct. After installing the batteries your remote control will display an 'Initial Set-up Screen' with the current room temperature in °C, a default time setting of 12:00 AM and the default day of the week set to **'MO'** - Monday.

NOTE **When batteries are changed all settings other than synchronisation are lost and the controller will revert back to the 'Initial set -up screen'.**

REMOTE CONTROLLER - SYNCHRONISATION.

NOTE **Before proceeding with synchronisation ensure that the gas and electricity are connected. Synchronisation must be carried out when a new controller has been purchased. Two controllers CAN NOT be used at the same time! The heater will not respond the controller until synchronisation has been carried out.**

Synchronisation of Controller and The Heater

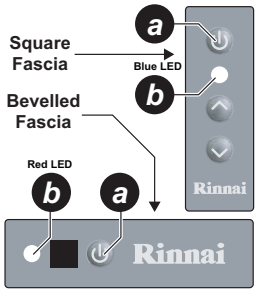

Step 1). Turn the power off at the power point for a minimum of 30 seconds, synchronisation will not be possible unless the minimum 30 seconds has been observed.

Step 2). Ensure the remote control is turned OFF, to turn OFF press and release the 'PWR' button once.

Step 3). Turn the power ON at the power point, the power operation indicator on the push button control panel will flash once. The controller can now be synchronised with the heater.

NOTE **Synchronisation MUST BE performed within 30 seconds of the power being turned ON, if more than 30 seconds has elapsed repeat steps 1 through 3.**

Step 4). On the controller in quick succession press the following sequence of buttons: **'P' > 'T' > 'T' > 'UP'** The LCD display will show 'L/C' (Learn Code) for 2 seconds then return to the normal 'OFF' state display. The power operation indicator **b** on the push button control panel will flash once to indicate that synchronisation has been accepted.

To restore factory default settings

With the thermostat 'OFF', press the following sequence of buttons **'P' > 'T' > 'T' > 'DOWN'.**

REMOTE CONTROLLER - MANUAL OPERATION

Turning 'ON'

Step 1). Press 'ON'/'OFF' button of the Push Button Control Panel **a** once the Power Indicator LED **b**, will illuminate.

Step 2). Press both the **'OK'** and **'PWR'** buttons on the controller at the same time. Operational control is now transferred to the controller, the heater operation is then dependant on the controller mode as follows:

In Manual Mode - Unless the set temperature is above that of the room temperature the heater will not ignite and the power Indicator LED **b** will illuminate to indicate that the heater is in Controller Standby mode. Raising the set temperature above that of the room temperature will start heater operation and the Power Indicator LED **b**, will change from red to blue. (This applies to the Square Fascia ONLY).

Turning 'OFF'

Step 1). To place heater into controller standby press the **'PWR'** button once. The heater will go into 'Standby' mode and the power Indicator LED **b** will illuminate.

Step 2). To turn the heater 'OFF' press the 'ON'/'OFF' Button **a** twice. The Power Indicator LED **b**, will be extinguished to indicate that the appliance has returned to the OFF condition.

Changing the temperature

The Symmetry has temperature increments of 1° which can be changed using the **'UP'** and **'DOWN'** buttons.

The temperature control range is 7 - 32°C

REMOTE / THERMOSTAT CONTROL

Change between Celsius - °C and Fahrenheit - °F

The thermostat temperature display can be set to °C or °F. The default is °C.

With the controller 'OFF', press the following sequence of buttons: **'P' > 'T' > 'T' 'A/M'** to toggle between °C or °F.

Change between manual, automatic and flame modes

Press and release the **'A/M'** button.

The unit first lights the pilot and then after a short period switches to the 'HIGH' flame setting.

To turn 'OFF' press and release the **'PWR'** button once.

REMOTE CONTROLLER - AUTOMATIC OPERATION

Setting the Current Time and Day of the Week

STEP 1 **STEP 2** **STEP 3**

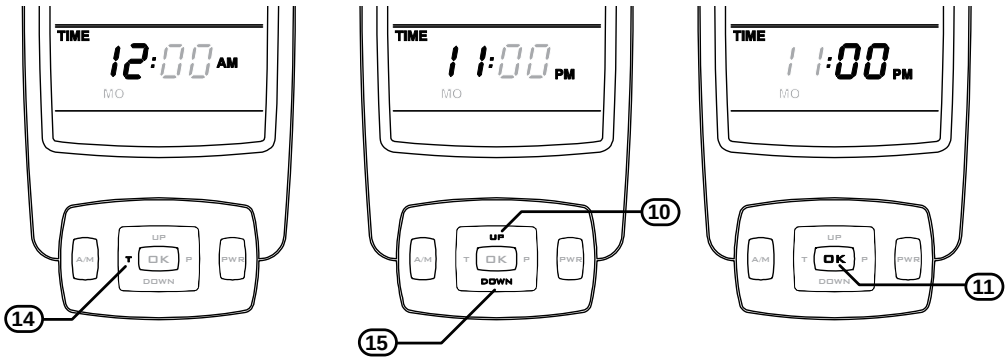

Step 1. With the controller 'OFF', press and hold the **'T'** button (14) for approximately 2 seconds. **'TIME'**, **'HOUR'** and **'AM or PM'** will flash.

If no buttons are pressed within 10 seconds the display will revert back to 'Initial Set-Up Screen' retaining the last entered setting.

NOTE

Step 2. To select the hour push the **'UP**' button (10) or **'DOWN'** button (15) until the desired hour is chosen, note that AM or PM is chosen by cycling through the 12 hour range.

Step 3. Press the **'OK'** button (11) to enter the selected hour and AM or PM. **'TIME'** + '**MINUTES'** + **'AM or PM'** will flash.

STEP 4 **STEP 5** **STEP 6** **STEP 7**

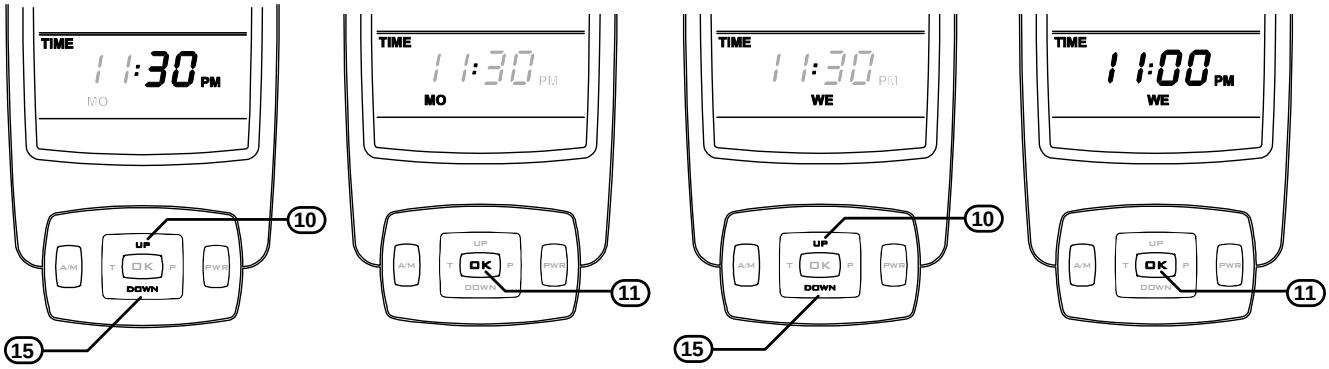

Step 4. To select the minutes push the **'UP**' button (10) or **'DOWN'** button (15) until the desired minutes are chosen.

Step 5. Press the **'OK'** button (11) to enter selected minutes, One of the days **SU, MO, TU, WE, TH, FR or SA** will flash.

Step 6. To select the hour push the **'UP**' button (10) or **'DOWN'** button (15) until the desired day is chosen.

Step 7. Press the **'OK'** button (11) to enter the selected day and to complete time and day setup.

REMOTE / THERMOSTAT CONTROL

To adjust time for Daylight Saving time

To adjust time or to adjust for daylight savings follow Steps 1 and 2 then press **'OK'** button (11), three times to keep the minutes and the current day.

NOTE **When changing batteries all settings will be lost and the controller will revert back to the 'Initial setup screen'. Re-setting of time, date and programming will be necessary.**

WIRELESS CONTROLLER / THERMOSTAT

The wireless controller is designed to be wall mounted on a bracket, (bracket supplied with the controller), within 20m of the heater.

The controller houses the thermostat which senses room temperature and communicates back to the Symmetry heater via Radio Frequency.

The ideal position for the controller is:

- Away from possible drafts in the room.
- Away from direct sunlight.
- Suitable distance away from the heater (not exceeding 20 metres).
- Ideally 1.5 m from the floor (approximately at chest height).

Controller Specifications

- Battery:
  2 x AA batteries.
- Battery Life:
  Approximately 12 months.
- Dimensions:
  Height: 140 mm, Width: 80 mm, Depth: 20 mm.

Additional information about Remote Thermostat Control Buttons

Transmit Indicator 	Indicates the thermostat is transmitting to the receiver, the symbol with appear on the LCD for 1 second.
Battery Indicator 	This symbol will flash when batteries need replacing. The thermostat will remain functional for approximately 5 days before shutting 'off'. Re-programming of the controller will be required after battery replacement.
Temperature Display 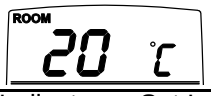	Displays current temperature. °C is the default but °F is available. The temperature range is 7°C - 32°C (45°F - 90°F).
Room Indicator or Set Indicator 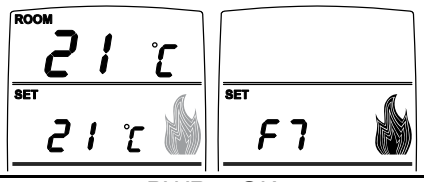	When the thermostat is 'ON' the programmed (set) temperature and the room temperature will be displayed. When the Flame mode is 'ON' the Flame setting F7 to F1 will be displayed.
PWR + OK 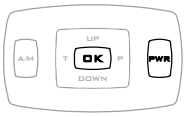	Switches the thermostat 'ON' and 'OFF'. If thermostat is 'OFF', pressing and releasing the **'PWR'** + **'OK'** button will turn the thermostat on to the most recently selected working mode.
T (Time) 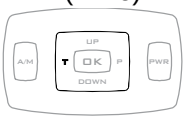	Initiates the time and day of week programming, press and hold for 2 seconds.
UP, DOWN & OK 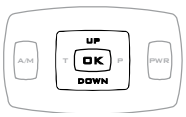	**'UP'** increase hours, minutes, day or temperature **'OK'**, accepts the current function and advances to the next function, **'DOWN',** decrease hours, minutes, day or temperature.
P (Program) 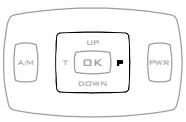	Initiates the programming mode, press and hold for 2 seconds.

REMOTE / THERMOSTAT CONTROL

Additional information about Remote Thermostat Control Operation

Character Diagnostic Check. To check the display characters on the remote control turn the controller 'off' by pressing the **'PWR'** button then press **P** - **T** - **T** - **OK** in rapid succession.

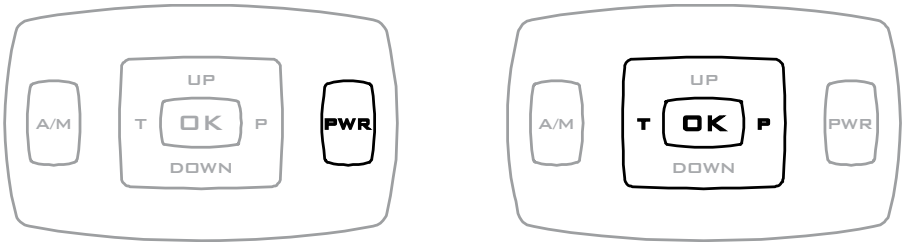

The remote will then commence automatically cycling through all the display characters, finally displaying the full screen as shown below.

This process takes approximately 20 seconds and does not affect any programming.

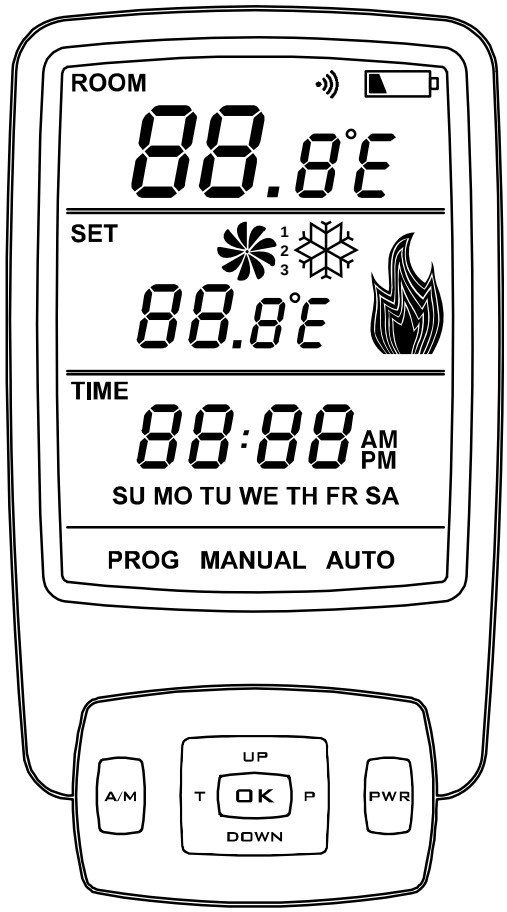

NOTE

If any of the characters are not displayed contact your Rinnai stockist for a replacement controller.

The Fan and Snowflake symbols displayed are not utilized in the operation of the Symmetry heater.

REMOTE / THERMOSTATIC CONTROLLED OPERATION

TO TURN YOUR HEATER ON WITH REMOTE / THERMOSTATIC CONTROL

NOTE

BEFORE PROCEEDING ENSURE THE GAS AND ELECTRICITY ARE TURNED ON.

Before remote / thermostatic control can be used the heater must be taken out of the OFF/ STANDBY condition (supply connected and switched ON but the heater turned OFF), do this as follows:

Press 'ON'/'OFF' button (a) once the electronic ignition sparker will be able to be heard.

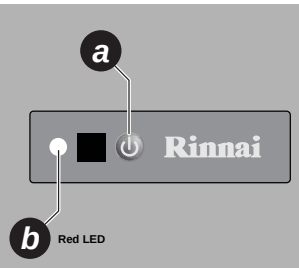

Control for bevelled fronted fascia

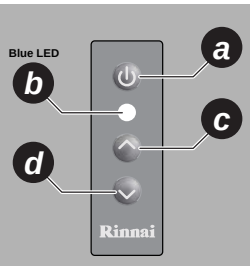

Control for square fronted fascia

The electronic ignition stops when the pilot flame has been established. The main burner then ignites off the pilot. Once the main burner has ignited the heater can then be operated by remote / thermostatic control.

MODES OF OPERATION

To Turn Remote 'ON' or 'OFF'

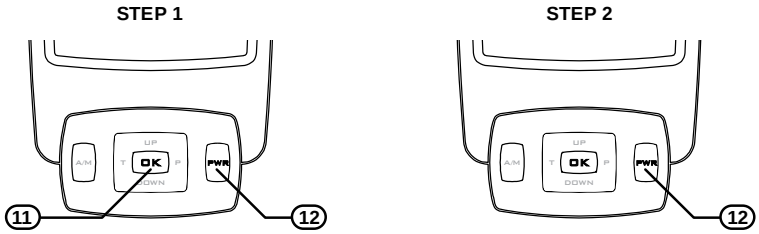

Step 1. To turn 'ON' - press and release the **'OK'** button (11) and **'PWR'** button (12) at the same time. The display will now include the setting temperature and the mode of operation.

Step 2. To turn 'OFF' - press the 'PWR' button (12) only.

Manual Temperature Mode

- Temperature can be set at any level.
- Time and day of week does not need to be programmed to operate.

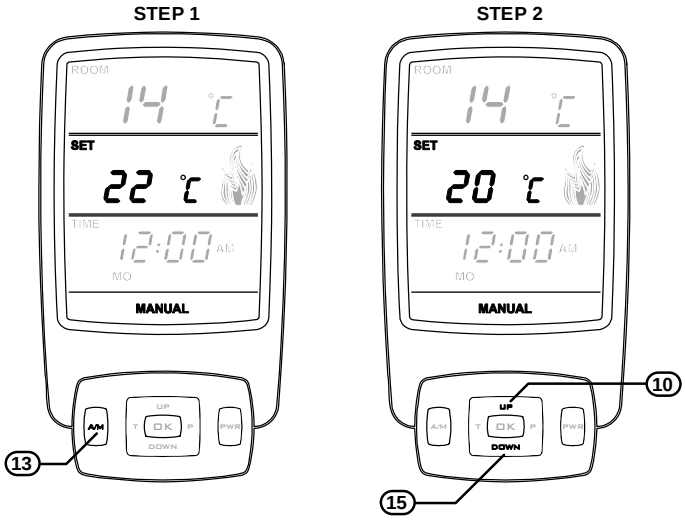

Step 1. With the controller turned 'ON', press and release the '**A/M'** button (13) until the word '**MANUAL'** appears on the LCD.

Step 2. Press the **'UP**' button (10) or **'DOWN'** button (15) to increase or decrease the temperature in increments of 1°C.

REMOTE / THERMOSTATIC CONTROLLED OPERATION

Automatic Timer Mode

- In automatic timer mode temperature is regulated to the programmed level and time.
- Time and day of week **MUST BE** set.

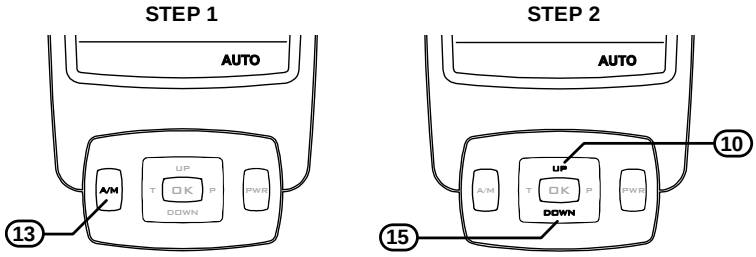

Step 1. With the controller turned 'ON', press and release the '**A/M'** button (13) until the word '**AUTO'** appears on the LCD.

Step 2. At any time press the **'UP**' button (10) or **'DOWN'** button (15) to increase or decrease the temperature in increments of 1°C.

Flame Mode

- Temperature control is over ridden and the flame size can be set to any setting from F7 highest to F1 lowest.

NOTE **When the fire first ignites it remains on highest flame for the first 60 seconds before changing to the selected flame height.**

- Time and day of week does not need to be programmed.

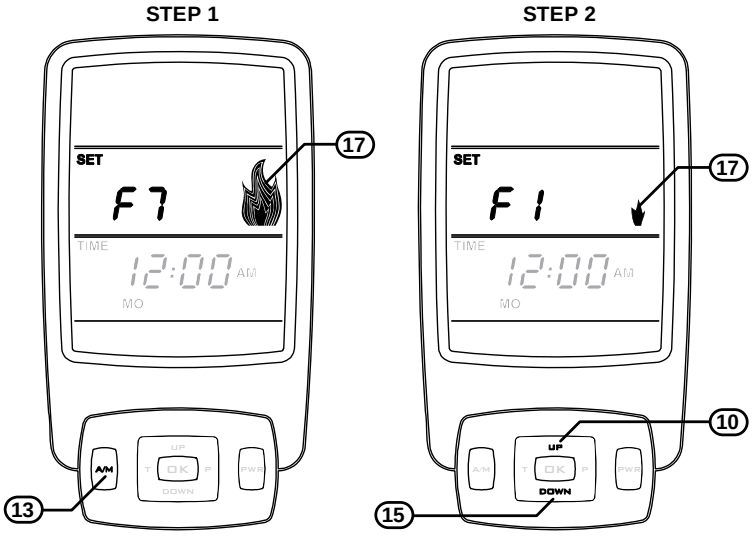

Step 1. With the controller turned 'ON', press and release the '**A/M'** button (13) until the letter **'*F*'** with a number and the flame symbol (17) appear on the LCD panel.

Step 2. Press the **'UP**' button (10) or **'DOWN'** button (15) to increase or decrease the flame height.

NOTE **The fan speed automatically adjusts to the corresponding flame height. It is not able to be selected by the operator. See the flame table below for flame height to fan speed relationship.**

Flame Height	1	2	3	4	5	6	7
Fan Speed	HIGH	LOW	LOW	LOW	HIGH	HIGH	HIGH

Manually Overriding The Set Program

At any time, the temperature or fan speed may be adjusted 'UP' or 'DOWN' similarly to operating in "Manual Temperature Mode" on page 14.

NOTE **However, whenever the thermostat changes to a new time period, the temperature will be set automatically according to that period's setting.**

REMOTE / THERMOSTATIC CONTROLLED OPERATION

Flame Height And Fan Speed

The flame height and fan speed are not individually adjustable. Flame height and fan speeds are selected by the microprocessor according to the difference between the set temperature and the ambient temperature of the room.

The fan speed automatically adjusts to the corresponding flame height. The fan speed is not able to be selected by the operator. When the heater is operated in 'Manual Temperature Mode' the flame height is automatically selected by the microprocessor to achieve and maintain the 'set' temperature. As an example, if the room is much colder than the 'set' temperature, the flame height and corresponding fan speed will be high. As the room heats up and gets close to the 'set' temperature the flame height and corresponding fan speed will revert to lower settings. When the heater is operated in 'Flame Mode' the flame height is set by the operator.

Flashing Small Flame Symbol 'ON'

The small flashing flame symbol (17) on the RF controller display indicates the room temperature is within 0.5°C of set temperature.



Program Modes

The appliance can be programmed to operate during four separate periods in one day, resulting in a possible 28 operating periods per week. A weekday program can be set so the program is used Monday to Friday. Similarly, a weekend program can be set for Saturday to Sunday. The entire week can also have the same program.

Factory default settings	If you do nothing to change the programming the following default settings would be available if you set it to automatic mode.			
	Time Period	Start Time	Temperature °C	Suggested Time Period Settings
	Period 1	**6:00 am**	**20°C**	**- Morning**
	Period 2	**8:30 am**	**15°C**	**- Day time**
	Period 3	**5:00 pm**	**21°C**	**- Evening**
	Period 4	**10.30 pm**	**15°C**	**- Night time**
To revert back to the default settings once you have reset the periods, in rapid succession press the following sequence of buttons 'P' - 'T' - 'T' - 'DOWN'.				

PROGRAMMING OF PROGRAM MODES

STEP 1



STEP 2



STEP 3

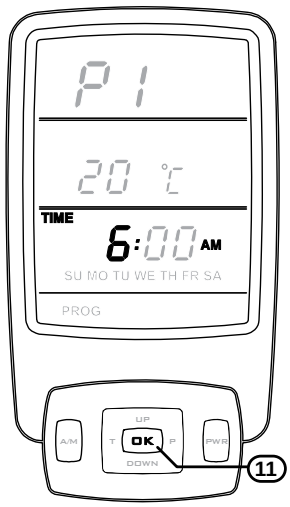

Step 1. With the controller 'OFF', press and hold the **'P'** button (16) for approximately 2 seconds. The LCD will display **'PROG'. '*Pd*'** and the current time and the day **'MO'** will flash.

Step 2. To select the day range press the **'UP**' button (10) or **'DOWN'** button (15) until the desired day range has been chosen. The day ranges are as follows:
MO➜ TU➜ WE➜ TH➜ FR➜ MO TU WE TH FR➜ SA➜ SU➜ SU - SA➜ SU MO TU WE TH FR SA

NOTE **Holding the 'UP' or 'DOWN' buttons for more than 2 seconds will scroll through the day ranges.**

Step 3. Press the **'OK'** button (11) to enter the selected day range. The LCD will display **'PROG'. '*P1*'** and the **'TIME'** + **'HOUR'** + **'AM'** will flash.

REMOTE / THERMOSTATIC CONTROLLED OPERATION

STEP 4



STEP 5



STEP 6



Step 4. To select the **'ON'** hour for ***'P1'*** push the **'UP**' button (10) or **'DOWN'** button (15) until the desired hour is chosen, note that AM or PM is chosen by cycling through the 12 hour range.

Step 5. Press the **'OK'** button (11) to enter the selected hour and AM or PM. **'TIME'** + '**MINUTES'** + **'AM or PM'** will flash.

Step 6. To select the **'ON'** minutes for ***'P1'*** push the **'UP**' button (10) or **'DOWN'** button (15) until the desired minute is chosen.

STEP 7

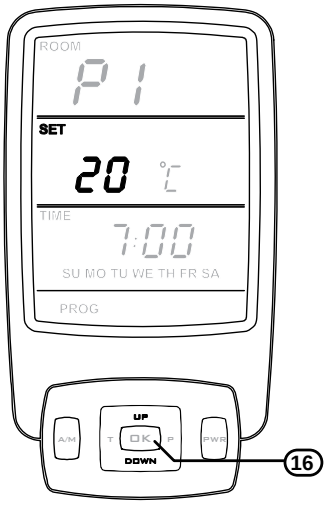

STEP 8



STEP 9



Step 7. Press the **'OK'** button (11) to enter the **'ON'** minutes. **'SET'** + **'TEMPERATUTRE DIGITS'** will flash.

Step 8. To select the **'ON'** temperature for ***'P1'*** push the **'UP**' button (10) or **'DOWN'** button (15) until the desired temperature is chosen.

Step 9. Press the **'OK'** button (11) to enter the selected temperature. The LCD will display **'PROG'. *'P2'*** and the **'TIME'** + **'HOUR'** + **'AM'** will flash, this completes the programming for the ***'P1* - ON'** period. Repeat steps 3 through 9 for **'PROG'. *'P2* - OFF'**, ***'P3* - ON'** and ***'P4'*** **'OFF'** periods.

CUSTOMER INFORMATION - OPERATION

MODES OF OPERATION

TO TURN REMOTE 'ON' or 'OFF'

- To turn 'ON' - press and release the **'OK'** and **'PWR'** Buttons at the same time, display will now include the setting temperature and the mode of operation.
- To turn 'OFF' - press the **'PWR'** Button only**.**

MANUAL TEMPERATURE MODE

- Temperature can be set at any level.
- Time and day of week does not need to be programmed to operate.
- With the controller turned 'ON', press and release the '**A/M'** button until the word '**MANUAL'** appears on the LCD. Press and hold the '**UP'** or **'DOWN'** buttons to increase/decrease the temperature in increments of 1°C.

AUTOMATIC TIMER MODE

- Temperature is regulated to the programmed level and time.
- Time and day of week must to be set.
- At any time the temperature may be manually adjusted '**UP'** or **'DOWN'**.

FLAME MODE

- Temperature control is over ridden and the flame size can be set to any setting from F7 highest to F1 lowest. Note: When the fire first ignites it remains on highest flame for the first 45 seconds before changing to the selected flame height.
- Time and day of week does not need to be programmed.

MANUALLY OVERRIDING THE SET PROGRAM

At any time, the temperature or fan speed may be adjusted 'up' or 'down' similarly to operating in **'Manual'** mode. However, whenever the thermostat changes to a new time period, the temperature will be set automatically according to that period's setting.

PROGRAM MODES

The appliance can be programmed to operate during four separate periods in one day, resulting in a possible 28 operating periods per week. A weekday program can be set so the program is used Monday to Friday. Similarly, a weekend program can be set for Saturday to Sunday. The entire week can also have the same program.

Factory default settings	If you do nothing to change the programming the following default settings would be available if you set it to automatic mode.			
	Time Period	Start Time	Temperature °C	Suggested Time Period Settings
	Period 1	6:00 am	20°C	- Morning
	Period 2	8:30 am	15°C	- Day time
	Period 3	5:00 pm	21°C	- Evening
	Period 4	10.30 pm	15°C	- Night time
To revert back to the default settings once you have reset the periods, press the following sequence of buttons **'P' - 'T' - 'T' - 'DOWN'.**				

FLAME HEIGHT AND FAN SPEED

The flame height and fan speed are not individually adjustable. The flame height and fan speeds are selected by the microprocessor according to the difference between the set temperature and the ambient temperature of the room.

The flame can be between low and high depending if the set temperature has been reached, the microprocessor will select the correct fan speed and flame height appropriate to the temperature selected, i.e.; if the room is cold and a higher temperature is selected the unit will respond with a large flame and high fan speed. As the air temperature in the room reaches the set temperature the flame and fan speed will reduce in unison accordingly.

FLASHING SMALL FLAME SYMBOL 'ON'

The small flashing flame symbol on the RF controller display indicates the room temperature is within 0.5°C of set temperature.

HOW TO OPERATE YOUR HEATER

TO BEGIN PROGRAMMING

With the controller 'OFF', press and hold the **'P'** button for 2 seconds to initiate programming. The LCD will display **'PROG'. '*Pd*'** and the time at which the controller is currently set will flash. Period 1 can now be set.

Setting the day of the week (days of the week flash)	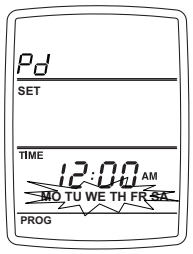	Step 1. Press and release the **'UP'**or **'DOWN'** button to change the day of the week. Step 2. Press and hold the **'UP'** or **'DOWN'** button for 2 seconds to increase the day of the week by 1 day. Scrolling order is as follows: **MO ➡ TU ➡ WE ➡ TH ➡ FR ➡ MO TU WE TH FR ➡ SA ➡ SU - SA ➡ SU ➡ MO TU WE TH FR SA.** Step 3. To accept the selected day/s of the week press **'OK'.**
Setting the hour 'ON' (time and hours flash)	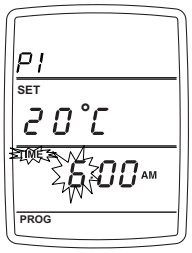	Step 1. Press and release the **'UP'** or **'DOWN'** button to increase or decrease the hour setting by 1 hour. Step 2. Press and hold the **'UP' or 'DOWN'** button for 2 seconds or longer to increase or decrease the hour setting by 1 hour every 0.5 seconds. Press **'OK'** to accept and select the minute.
Setting the minute function (time and minutes flash)	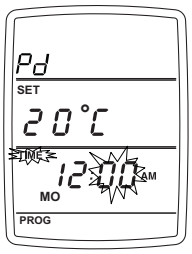	Step 1. Press and release, or press and hold the **'UP'** or **'DOWN'** button to increase or decrease the minute setting by 1 minute similarly to the hour setting. Step 2. Press **'OK'** to accept and select the day of the week.
Setting the run period starting time	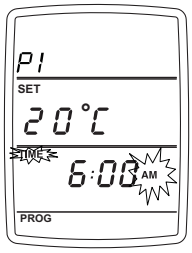	Step 1. After setting the day the AM/PM settings will flash. To set the '**P1'** starting time, press and release the **'UP'** or **'DOWN'** button for the hour setting. Ensure that the AM/PM is set correctly. Step 2. To accept press **'OK'.** Step 3. The minute setting will now flash, adjust as in Step 1 and press **'OK'** to accept.
Setting the temperature (set and temperature flash)	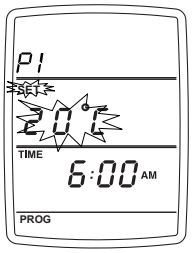	Step 1. After setting the time period the temperature will flash. Press and release the **'UP'** or **'DOWN'** button to adjust the temperature to the desired setting. If you do not require the heater to come ON during a period, adjust the temperature 'DOWN' until - - °C is displayed. Step 2. To accept press **'OK'**. Period 1 is now set for the day/s of the week you have chosen. The LCD will display '**P2'** to indicate Period 2 can now be set for the same day/s of the week. Repeat programming process for remaining periods. The controller will automatically turn 'OFF'.

HOW TO OPERATE YOUR HEATER

The controller is factory set, therefore synchronise will not be necessary, however if you have purchased the controller as a spare part then refer to the following.

Initial setup, synchronising the controller to your Symmetry heater, required only if the controller is purchased as a spare or replacement part.

Before proceeding with synchronisation ensure that the gas and electricity are connected.

Two controllers CAN NOT be used at the same time!

Remote Controller - Synchronisation 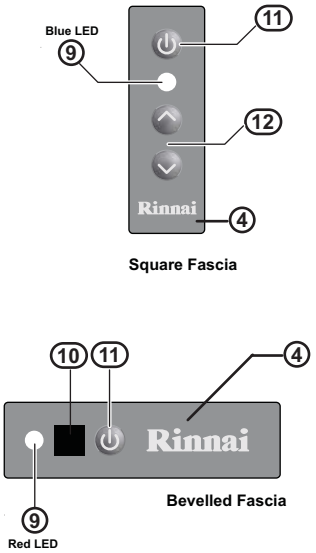 	Step 1. Turn the power off at the power point for a minimum of 30 seconds, synchronisation will not be possible unless the minimum 30 seconds has been observed. Step 2. Ensure the remote control is turned off, to turn 'OFF' press and release the 'PWR' button once. Step 3. Turn the power on at the power point, the power operation indicator on (9) the control panel (4) will flash once. The controller can now be synchronised with the heater. **Synchronisation MUST BE performed within 30 seconds of the power being turned on, if more than 30 seconds has elapsed repeat steps 1 through 3.** Step 4. On the controller in quick succession press the following sequence of buttons: **'P'** > **'T'** > **'T'** > **'UP'**. The LCD display will show 'L/C' (Learn Code) for 2 seconds then return to the normal 'OFF' state display. The power operation indicator (9) on the control panel (4) will flash once to indicate that synchronisation has been accepted.
To restore factory default settings	With the thermostat 'OFF', press the following sequence of buttons **'P' > 'T' > 'T' > 'DOWN'**
Turning 'ON' and 'OFF'	**Turning 'ON'** Press the 'ON'/'OFF' button, which is located on the 'Manual Control Switch Panel' at the bottom right of the heater (11). The Power Operation Indicator (9) on the 'Manual Control Switch Panel' will turn illuminate. To transfer Operational control to the Remote Controller press both the 'OK' and 'PWR' buttons on the controller at the same time. **Turning 'OFF'** To place the heater into controller standby press the 'PWR' button once. The heater will go into 'Standby' mode and the Power Operation Indicator (9) on the 'Manual Control Switch Panel' will be extinguished. To turn the heater 'OFF' press the 'ON'/'OFF' button (11) twice. The Power Operation Indicator (9) on the 'Manual Control Switch Panel' will remain extinguished to indicate that the appliance has returned to the OFF condition.
Changing the temperature	The Symmetry® has increments of 1° which can be changed using the **'UP'** and **'DOWN'** buttons. The temperature control range is 7 - 32°C
Change between Celsius - °C and Fahrenheit - °F	The thermostat temperature display can be set to °C or °F. The default is °C. With the thermostat 'OFF', press the following sequence of buttons: **'P' > 'T' > 'T' 'A/M'** to toggle between °C or °F.
Change between manual, automatic and flame modes	Press and release the **'A/M'** button.

HOW TO OPERATE YOUR HEATER

MANUAL SWITCH MODE

If you lose your remote controller or the batteries go flat you can still operate your unit in * 'Manual Switch Mode'.

Step 1. Press 'ON'/'OFF' button (11) until the sparker can be heard. The button is discretely located on the 'Manual Control Switch Panel' at the bottom right of the heater.

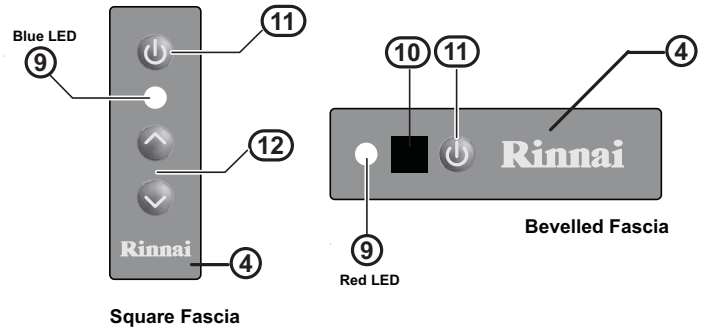

Step 2. Once the electronic sparker has activated the pilot flame will ignite, the main burner will ignite off the pilot & automatically go to Stage 7-High Flame. The LED Power Indicator (9), will be constantly illuminated indicating heater operation in 'Manual Switch Mode'. For bevelled fascia the heater will remain on Stage 7-High Flame setting, flame adjustment will not be possible.

For square profile fascia the flame may be adjusted from Stage 7-High Flame to low flame setting by pressing the flame up/down buttons, (12), on the manual control pad.

Step 3. To turn the heater 'OFF' press the 'ON'/'OFF' Button (11). The LED Power Indicator (9) will flash indicating that the appliance has functioned in 'Manual Switch Mode' and is independent of the remote controller.

NOTE

If the controller is lost or if the batteries go flat the unit will operate as described above, however, extreme caution must be used because the appliance will continue to operate on 'HIGH' setting only.

For Square Fascia only

• Temperature adjustment is possible by pressing buttons (12) up or down until desired temperature is achieved.

For Bevelled Fascia only

• NO lower adjustment of temperature is possible without re-engaging the thermostatic controller.

LOSS OF REMOTE CONTROL FUNCTION

* NOTE: Once the 'Manual Switch Mode' has been selected the heater will only operate by pressing the 'Manual Switch', once you have pressed the 'Manual Switch' the heater will not respond to the remote controller.

TO REGAIN REMOTE CONTROL

Step 1. Turn the heater 'ON' with the 'Manual Switch', follow steps 1 and 2 of "MANUAL SWITCH MODE" above.

Step 2. On your remote control hand set, select refer to "MANUAL TEMPERATURE MODE" on page 18 for 'Manual Mode'.

Step 3. Press the 'UP' or 'DOWN' button to raise or lower the temperature, this will send a signal to your heater reinstating remote control.

Step 4. Remote Control has now been reinstated and normal programming can be selected.

GAS SUPPLY DISRUPTION

Should disruption to gas supply occur the appliance will go into 'lockout' after sparking for 1 minute. Under 'lockout' the LED Power Indicator (9) will remain illuminated. To start the appliance again, press and release the 'ON / OFF' (11) button twice after gas supply resumes.

POWER DISRUPTION

In the event of power failure / disruption the heater will turn 'OFF' and will need to be manually turned 'ON' again when power is restored. This is a safety feature. Refer to, "* NOTE: Once the 'Manual Switch Mode' has been selected the heater will only operate by pressing the 'Manual Switch', once you have pressed the 'Manual Switch' the heater will not respond to the remote controller." on page 18.

CARE AND MAINTENANCE

Your heater needs very little maintenance, but the following information will help you to keep it looking good and working efficiently.

IMPORTANT

DO NOT attempt to clean the heater while the appliance is hot or operating.
All parts of the heater can be cleaned using a soft, damp cloth.
DO NOT use solvents or abrasives to clean any parts.
DO NOT spray aerosols in the vicinity of the heater whilst in operation.
DO NOT place articles on or against this heater.
DO NOT store flammable materials near this heater.

GENERAL OPERATION CHARACTERISTICS

NOTE: Before asking for a service call please check the following table as these characteristics are part of the normal operation of the appliance and do not indicate a fault.

CHARACTERISTIC	➡	EXPLANATION
At ignition:		
Warm air does not start when the burner lights.	➡	The room fan air is started automatically after a short delay. This is to allow the heat exchanger to warm up, helping to avoid cold draughts.
Smoke or strange smells are produced on the first start up after installation.	➡	This is caused by grease, oil or dust on the heat exchanger. This will stop after a short time.
Sharp clicking noises at ignition, or when the unit thermostat modulates to a lower or higher setting, or shuts down.	➡	This is simply expansion and contraction noise from the heat exchanger.
During combustion:		
Dull clunking noise when the thermostat operates	➡	This is the sound of the solenoid gas valves opening and closing to regulate the gas flow.
When the appliance is turned off:		
Convection fan continues to run after turning 'OFF'.	➡	This is to remove residual heat from the heat exchanger and stops once the appliance cools.

SERVICE

Rinnai recommend that this appliance and installation be inspected and serviced every 2 years or more frequently.

If the power supply cord or any other component of the heater are damaged, they must be replaced by Rinnai or a suitably qualified person.

Any service or repair work should only be carried out by an authorised person. Rinnai has service and spare parts departments nationally. See back cover for contact details.

NOTE

Service calls for general cleaning, maintenance and wear and tear are not necessarily covered under the warranty. Service calls of this nature may be chargeable.
Faults caused by insufficient gas supply, gas quality, installation errors or operation errors are not covered by the Rinnai warranty. Refer to separate Warranty booklet for details.

TABLE OF CONTENTS - INSTALLATION

SPECIFICATIONS 25
GENERAL SPECIFICATIONS 25
DIMENSIONS 26
HEATER LOCATION 27
LOCATION 27
GAS SUPPLY 27
PURGING THE GAS SUPPLY 27
ELECTRICAL SUPPLY 27
ENCLOSURE REQUIREMENTS 28
ENCLOSURE DIMENSIONS 28
TV AND ORNAMENTATION WARNING 29
INSTALLATION OF TV OR ORNAMENTATION ABOVE THE HEATER 29
FLUE INFORMATION - ABEY® FLUE SYSTEM 30
FLUE INSTALLATION CONFIGURATION 30
TYPES OF FLUE INSTALLATION 31
FLUE TERMINAL LOCATION 31
FLUE INFORMATION - ABEY® FLUE SYSTEM 32
HEATER INSTALLATION 33
HEATER INSTALLATION OVERVIEW 33
HEATER INSTALLATION - DETAIL 33
CONSTRUCTING THE FRAME 33
UNPACK THE APPLIANCE 33
PREPARING THE APPLIANCE FOR INSTALLATION 33
INSERT AND FIX THE APPLIANCE TO THE FRAME WORK 34
CONNECT FLUE AND INSTALLING THE FLUE RESTRICTOR 35
CONNECT THE APPLIANCE TO CONSUMER GAS PIPING 36
INSTALL THE LOG SET 36
REPLACE THE GLASS PANEL ASSEMBLY 37
CONNECT TO ELECTRICITY SUPPLY 37
COMMISSION THE APPLIANCE 38
REPLACE PANELS 39
COMPLETE THE CLADDING 39
FIT THE SURROUND 40
FITTING THE MESH GUARD & DRESS GUARD FRAME ASSEMBLY 40
WIRING DIAGRAM 42
CHECKLISTS 43
INSTALLATION AND COMMISSIONING CHECKLIST 43
FINAL CHECKLIST 43
CONTACT INFORMATION 44

TROUBLE SHOOTING

TROUBLE SHOOTING CHECKLIST

Use the following chart to help determine whether a service call is required, however if you are unsure about the way your heater is operating, contact Rinnai or your local agent.

Fault Condition → / Probable Cause ↓	Burners fail to ignite	Smell of gas	Fan Not Working	Minor soot deposits	Severe sooting	Glass, Condensating	Glass, Streaky lines	Remote not working	← Fault Condition / Simplest Possible Remedy ↓
Not plugged in or turned off	●								Plug in power cord and turn power 'ON'.
Mains power failure	●								Re-ignition, when power restored.
(Initial Install) Air in gas pipe	●								Installer to purge air from gas supply.
Air in hose	●								Repeat Ignition procedure.
Ignition failure	●								Repeat Ignition procedure.
Flat battery for remote control	●							●	Replace remote control battery.
Gas supply turned off	●								Turn gas supply on at the meter or cylinder.
Gas escape		●							Isolate gas supply, call Rinnai.
Inadequate flue system	●				●				Call Rinnai.
Insufficient gas pressure	●				●				Call Rinnai.
Log Misalignment					●				Call Rinnai.
Normal operation				●					No action is required.
Normal operation							●		Fan not working - fan automatically comes on after 4 minutes not heat switch activated.
Normal operation						●			Allow heater to warm up.
Heat switch not activated			●						Allow heater to run on high for 4 minutes.
Possible fan fault			●						Call Rinnai.
Controller display blank	●							●	Replace batteries.
Manual Switch Mode select	●							●	Refer to page 21 for solution.

ABNORMAL FLAME PATTERN

Each Rinnai Flame Fire heater has a distinct flame pattern. The flame should look the same every time you start your heater, after an initial warm up period of approximately 15 minutes.

Abnormal flame performance and/or pattern can indicate a problem with your heater, such as blocked gas injectors or artificial logs/burn media may have shifted from when the heater was first installed. There are some warning signs that could indicate a problem. If any of the signs below occur, please contact Rinnai.

Normal	Abnormal
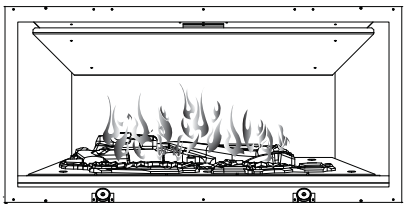	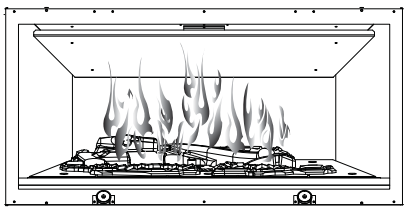

Signs of abnormal flame performance:

- Continuous unusual smell from the appliance.
- Continued difficulty or delay in establishing a flame.
- Flame appears either very short or very long.
- Flame only burns part way across the burner.
- Severe soot building up on the inside of the glass door.
- Appliance turns 'OFF' soon after start up and does not relight.
- Flame appears overly orange-yellow.

SPECIFICATIONS

GENERAL SPECIFICATIONS

Models	RDV3610ETR(N/L) / RDV3611ETR(N/L)
Model Name	Symmetry® Gas Log Flame Fire
Features	Balanced Flue Inbuilt Gas Space Heater Burning log effect Glass front Convection Fan, top warm air outlet Wireless Remote control/thermostat, 7 day programmable timer
Installation	Inbuilt only
Combustion Method	Ceramic top pan burner - bunsen burner type
Flue	Balanced Co-Axial Flue, Inner = 100 mm or 4 ‘Outer = 170 mm or 6 x 5/8’, for Flueing configuations refer page 30
Gas connection	15mm (1/2”) male flare
Gas types	Natural Gas / Universal LPG / Propane
Ignition	Continuous Spark Electronic Ignition
Input / Output	Refer data plate and energy rating label on appliance
Power Consumption	High 50 W, Standby < 0.3 W 1500 mm cord is supplied with a 3 pin plug on right hand side of appliance
Safety Devices	Overheat Switches Electrical Fuse Flame Failure Sensing System (FFD) Power Failure Protection
Temperature Control	Thermostatic, temperature control range 17 - 32°C
Weight	75 Kg - uncrated - no Flue

Note: Rinnai reserves the right to change specifications without notice

NOTE **For other appliance specifications refer to appliance data plate.**

DIMENSIONS

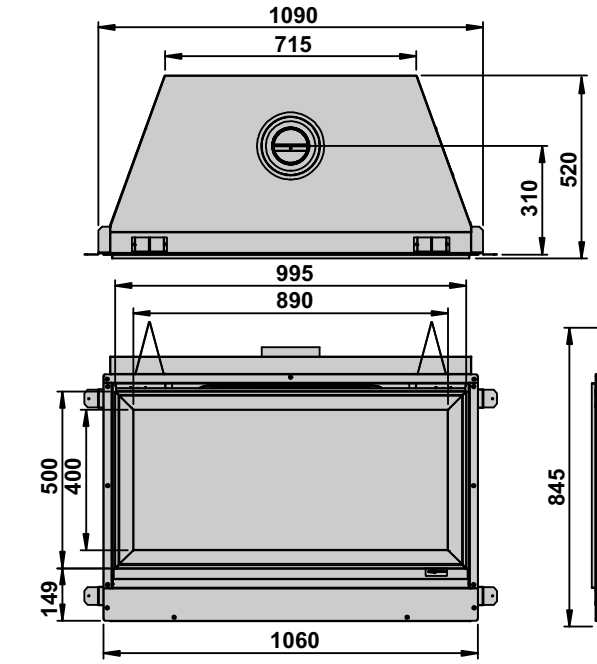

MAIN BODY

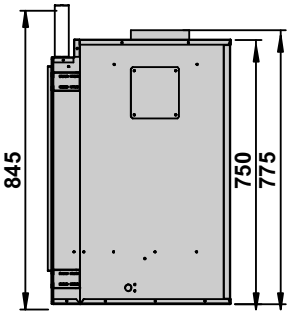

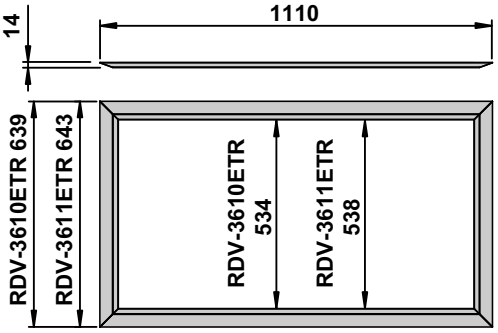

OUTER SURROUNDS

BEVELLED FASCIA

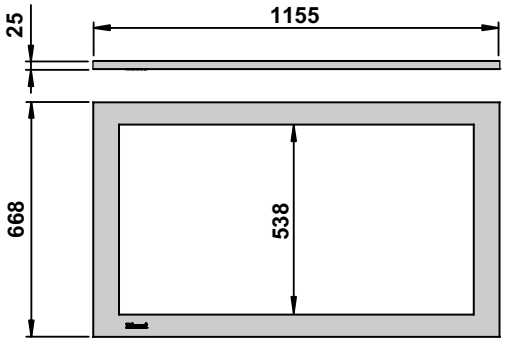

SQUARE FASCIA

Cavity Dimensions:	Width: 1100	Height: 845	Depth: 600

NOTE

All dimensions are in (mm)
* Depth: Adjustable to allow for cladding material

HEATER LOCATION

LOCATION

- When positioning the heater, variables governing the location are Flueing and Warm Air Distribution.
- This heater must not be installed where curtains or other combustible materials could come into contact with it. In some cases curtains may need restraining. Refer to page 7 for additional safety consideration.
- Mantles and surrounds can be added to compliment the design provided that they conform to the clearances shown in the drawings below.
- The minimum clearance from the mesh dress guard edge is 400 mm. The depth of the mantle/surrounds at the minimum clearance may not exceed 150 mm.
- An additional 100 mm of clearance is required for every extra 50 mm of mantle depth, i.e. for a 200 mm deep mantle the clearance is 500 mm (as shown below).

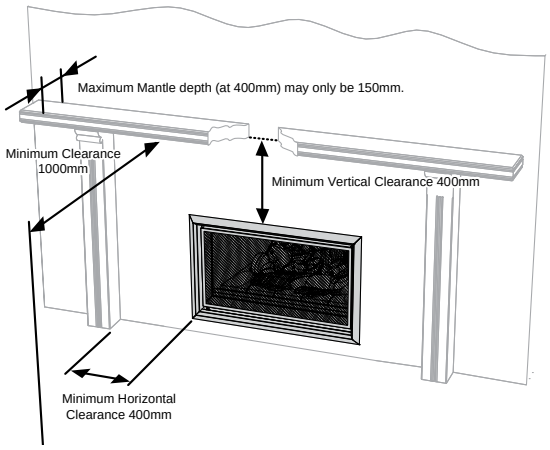

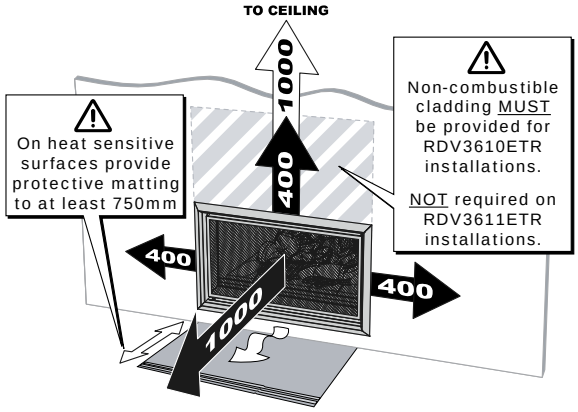

NOTE **Clearances are the same for Bevelled and Square Fascia's.**

WARNING **For all installations. Only as specified Abey® Co-Axial Flue components MUST be used. The Rinnai Symmetry® MUST NOT be flued into 'natural draft' flue system or terminate into a chimney.**

GAS SUPPLY

The gas supply terminates inside the heater at the front lower left hand side of the appliance.

Locate the gas supply pipe to suit position as per the heater gas inlet. Refer to "CONNECT THE APPLIANCE TO CONSUMER GAS PIPING" on page 36 for appliance gas inlet location.

WARNING **Gas pipe sizing must consider the gas input to this appliance as well as all other gas appliances in the premises. The gas meter and regulator must be specified for the total gas rate. Suitable sizing chart such as the one in AS/NZS 5601 should be used.**

PURGING THE GAS SUPPLY

- All foreign materials such as filings must be purged from the gas supply, before connecting to the appliance as they may cause the gas control valve to malfunction.

ELECTRICAL SUPPLY

- This heater is supplied with a power cord (length 1500 mm) and three pin plug. The power cord passes through the right hand side panel as shown. Rinnai recommend the heater be plugged into a 240V, 10A earthed power point. The power point must not be above the heater.
  A suitable means of electric isolation must be provided which is adjacent to the appliance and accessible with the appliance installed, in accordance with AS/NZS 5601.
- The appliance can be direct wired if the power supply is to be concealed. An isolator switch MUST be used in accordance with AS/NZS 5601 & AS/NZS 3000.

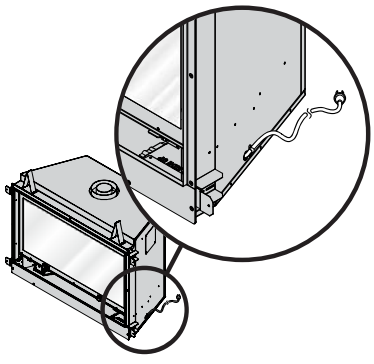

HEATER LOCATION

IMPORTANT

Consult a qualified electrician if direct wiring is required as it must comply with the requirements of AS/NZS 5601 & AS 3000 and any other relevant local regulations.

The electrical cord must not come into direct contact with the heated parts of the appliance or flue system.

If the power cord is damaged and requires replacing, it must be replaced by a licensed tradesperson. It must be a genuine replacement part available from Rinnai.

ENCLOSURE REQUIREMENTS

RDV3610ETR

The appliance must be positioned on a flat level surface. As this appliance has a cool outer casing it can be installed into a decorative fireplace constructed from materials such as wood or plaster. The only exception is the cladding above the appliance which must be non-combustible and extend at least 400 mm above the appliance in accordance with the drawings on page 4, page 27 and page 39.

If the appliance is elevated from the ground, a base must be constructed using suitable material with supporting joists, capable of easily supporting a minimum of 175kg. (Flue must be supported independently of the appliance).

Typical Frame Layout

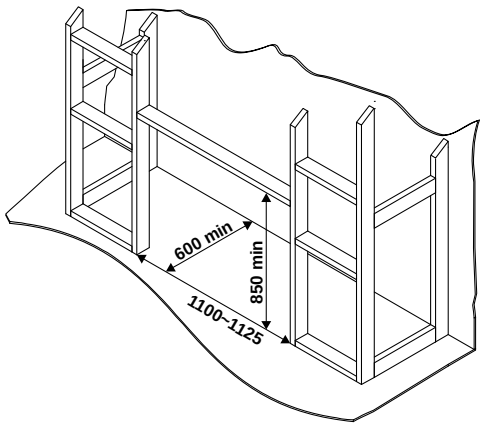

RDV3611ETR

Cladding material need not be non-combustible. Ensure construction is in accordance with drawings on page 4, page 27 and page 39.

Corner Installation Layout

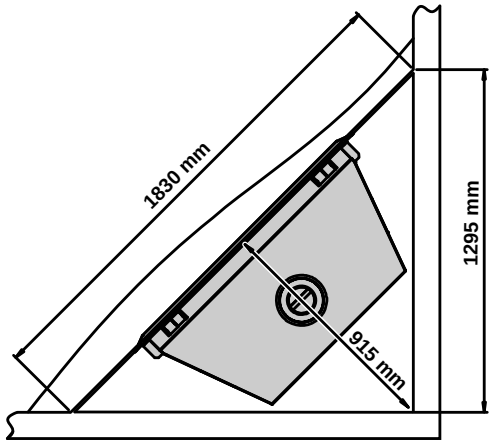

ENCLOSURE DIMENSIONS

Enclosure dimensions as shown. The enclosure dimensions specified are critical to the successful installation of this appliance and must be strictly adhered to.

TV AND ORNAMENTATION WARNING

INSTALLATION OF TV OR ORNAMENTATION ABOVE THE HEATER

CAUTION

The temperature of the wall surface directly above the appliance is elevated and may discolour paint finishes or distort vinyl wall coverings. For durability of surfaces you should contact the relevant manufacturer for their specification.

The installation of electrical appliances above and in the vicinity of the heater such as, but not limited to, Plasma TV, LCD TV, Home Theatre Screens, Speakers, etc must comply with their manufacturers' instructions.

It is the responsibility of the installer/end-user to check the installation instructions of these items and to ensure the location is suitable.

This caution also extends to, but is not limited to, ornaments such as: Paintings, Prints, Photographs, Tapestries, Mirrors, Stuffed Animals, etc.

Please note the recommended clearances in the image below.

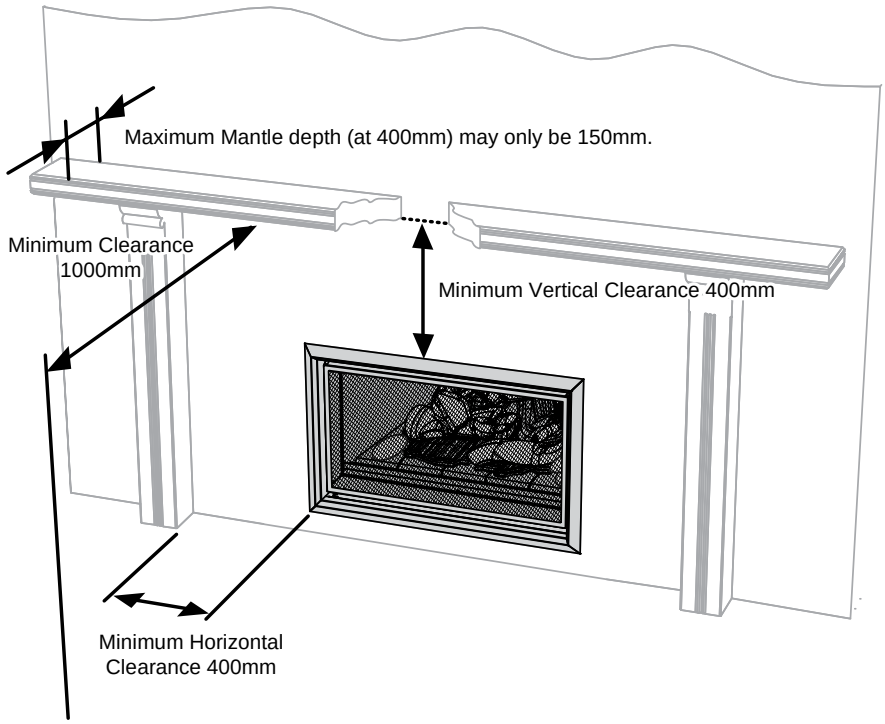

IDEA

Use either a shelf or mantle below the TV or ornament or alternately you can construct a recess to mount TV or ornament on.

Check the manufacturers installation instructions for these items and ensure the recess is suitable.

NOTE

Rinnai does not take any responsibility for any damage occurring to any items installed above and in the vicinity of the heater.

FLUE INSTALLATION CONFIGURATION

FLUE INFORMATION - ABEY® FLUE SYSTEM

All measurements are in (mm)

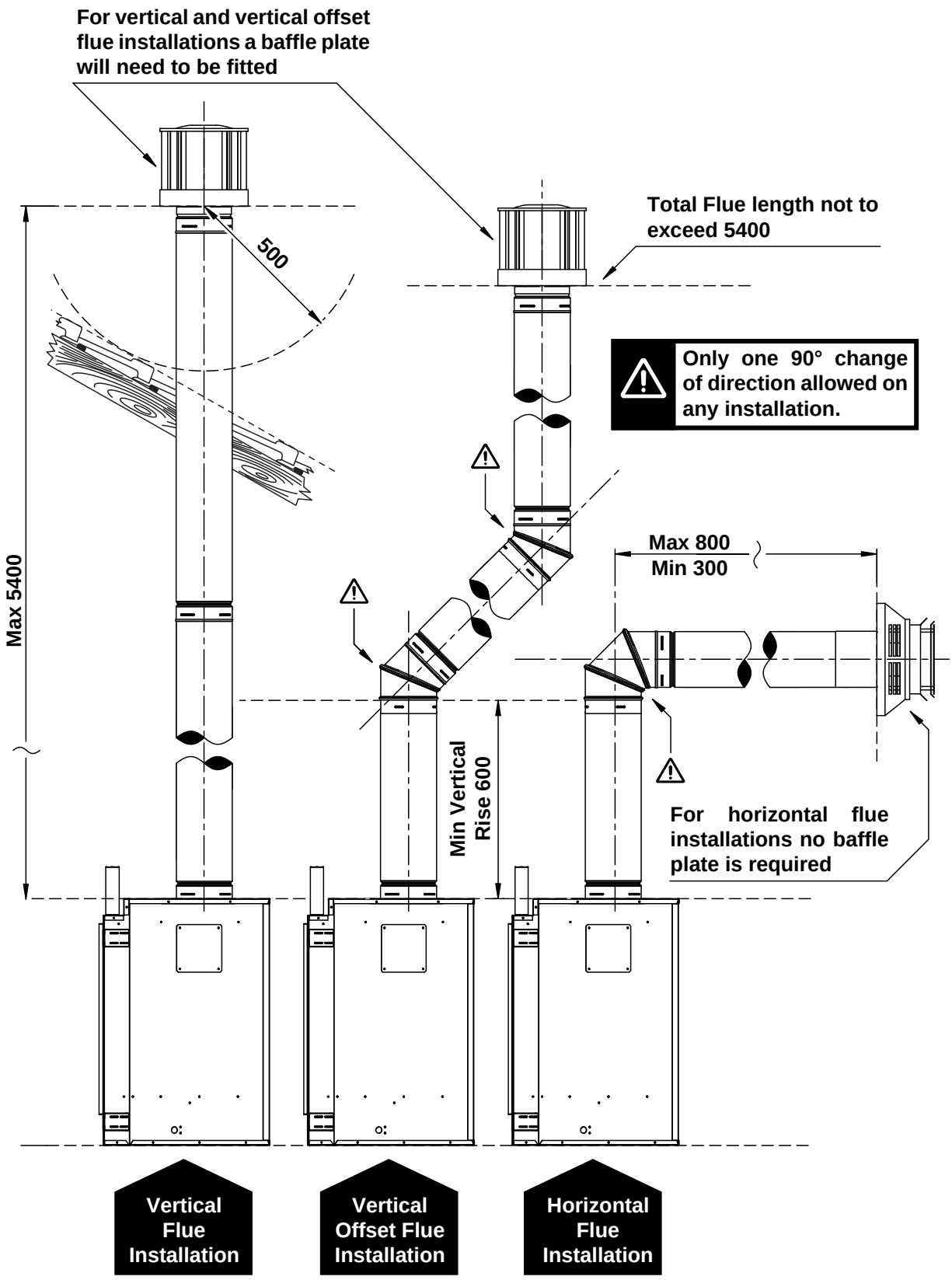

CAUTION

Correct baffle must be used for vertical installations refer to page 35 for details.

FLUE INSTALLATION CONFIGURATION

TYPES OF FLUE INSTALLATION

The types of suitable flue configurations are shown above. Other flue configurations are not suitable. Suitable flue components are shown below. Other flue components not shown are not suitable. For full details regarding flue assembly and installation refer to the 'Simpson Duravent'® "DirectVent Pro" Installation Instructions supplied with the flue components.

A 'flue restrictor plate' needs to be installed inside the appliance for some flue configurations. This is to ensure the correct amount of 'natural draft' can be achieved. Refer to the section "CONNECT FLUE AND INSTALLING THE FLUE RESTRICTOR" on page 35 for more information.

FLUE TERMINAL LOCATION

WARNING

The flue terminal should be positioned away from flammable materials.

Ensure that the location of the flue terminal can comply with the requirements of AS/NZS 5601, Fig. 6.2 which is reproduced below. Clearances for Natural Draft apply.



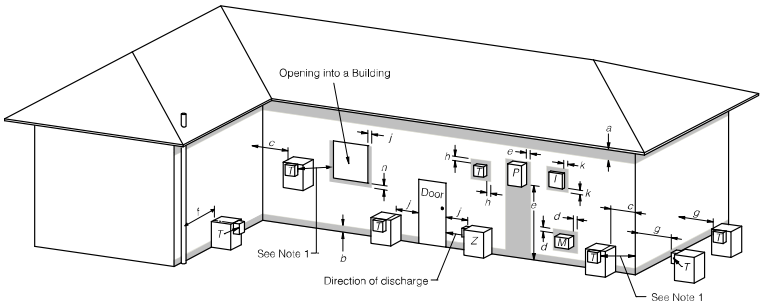

T = Flue terminal *Z* = Fan assisted flue appliance only *M* = Gas meter *P* = Electricity meter or fuse box *I* = Mechanical air inlet

Shading indicates prohibited areas for flue terminals

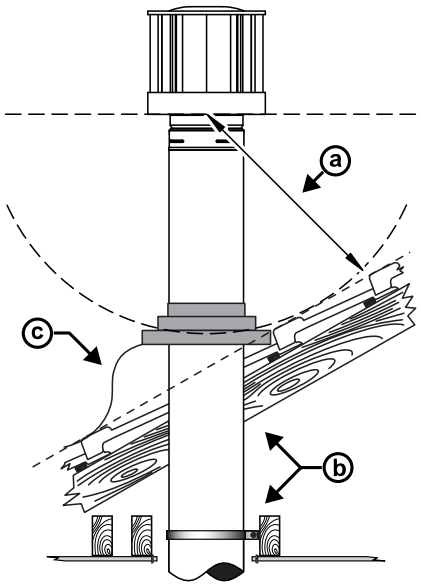

Ref.	Item	Min. clearances (mm) Natural draft	Fan assisted
a	Below eaves, balconies and other projections:		
	• *Appliances* up to 50 MJ/h input	300	200
	• *Appliances* over 50 MJ/h input	500	300
b	From the ground, above a balcony or other surface *	300	300
c	Front a return wall or external corner *	500	300
d	From a gas *meter* (M) (see 5.11.5.9 for vent terminal location of *regulator*) (see Table 6.6 for New Zealand requirements)	1000	1000
e	From an electricity *meter* or fuse box (P) †	500	500
f	From a drain pipe or soil pipe	150	75
g	Horizontally from any building structure* = or obstruction facing a termina l	500	500
h	From any other *flue terminal* , cowl, or combustion air intake †	500	300
j	Horizontally from an openable window, door, non-mechanical air inlet, or any other opening into a building with the exception of sub-floor ventilation:		
	• *Appliances* up to 150 MJ/h input *	500	300
	• *Appliances* over 150 MJ/h input up to 200 MJ/h input *	1500	300
	• *Appliances* over 200 MJ/h input up to 250 MJ/h input *	1500	500
	• *Appliances* over 250 MJ/h input *	1500	1500
	• All fan-assisted *flue appliances* , in the direction of discharg e	-	1500
k	From a mechanical air inlet, including a spa blower	1500	1000
n	Vertically below an openable window, non-mechanical air inlet, or any other opening into a building with the exception of sub-floor ventilation:		
	• Space heaters up to 50 MJ/hr input	150	150
	• Other *appliances* up to 50 MJ/hr input	500	500
	• *Appliances* over 50 MJ/h input and up to 150 MJ/h inpu t	1000	1000
	• *Appliances* over 150 MJ/h input	1500	1500

* - unless *appliance* is *certified* for closer installation

† - Prohibited area below electricity meter or fuse box extends to ground level.

NOTES:

1 Where dimensions *c, j* or *k* cannot be achieved an equivalent horizontal distance measured diagonally from the nearest discharge point of the terminal to the opening may be deemed by the Technical Regulator to comply.

2 See Clause 6.9.4 for restrictions on a *flue terminal* under a covered area.

3 See Figure J3 for clearances required from a *flue terminal* to an LP Gas *cylinder*. A *flue terminal* is considered to be a source of ignition.

4 For *appliance* s not addressed above acceptance should be obtained from the Technical Regulator.

FIGURE 6.2 (in-part) MINIMUM CLEARANCES REQUIRED FOR BALANCED FLUE TERMINALS, FAN-ASSISTED FLUE TERMINALS, ROOM-SEALED APPLIANCE TERMINALS AND OPENINGS OF OUTDOOR APPLIANCES

(a) Minimum clearance 500 mm to nearest part of roof.

(b) Minimum clearance 25mm to combustible materials.

(c) Decktite or lead collar flashing.

NOTE

*** AS/NZS 5601 was current at the time of printing this manual, but may have been superseded. It is the installers responsibility to ensure that the current version of this standard is used.**

FLUE INSTALLATION CONFIGURATION

FLUE INFORMATION - ABEY® FLUE SYSTEM

Pipe length 48 inch - 46DVA-E48 (1200mm)

Abey® Order Code: DV902

Pipe length 24 inch - 46DVA-E24 (600mm)

Abey® Order Code: DV904

Pipe length 12 inch - 46DVA-12 (300mm)

Abey® Order Code: DV906

Pipe length 9 inch - 46DVA-09 (230mm)

Abey® Order Code: DV907

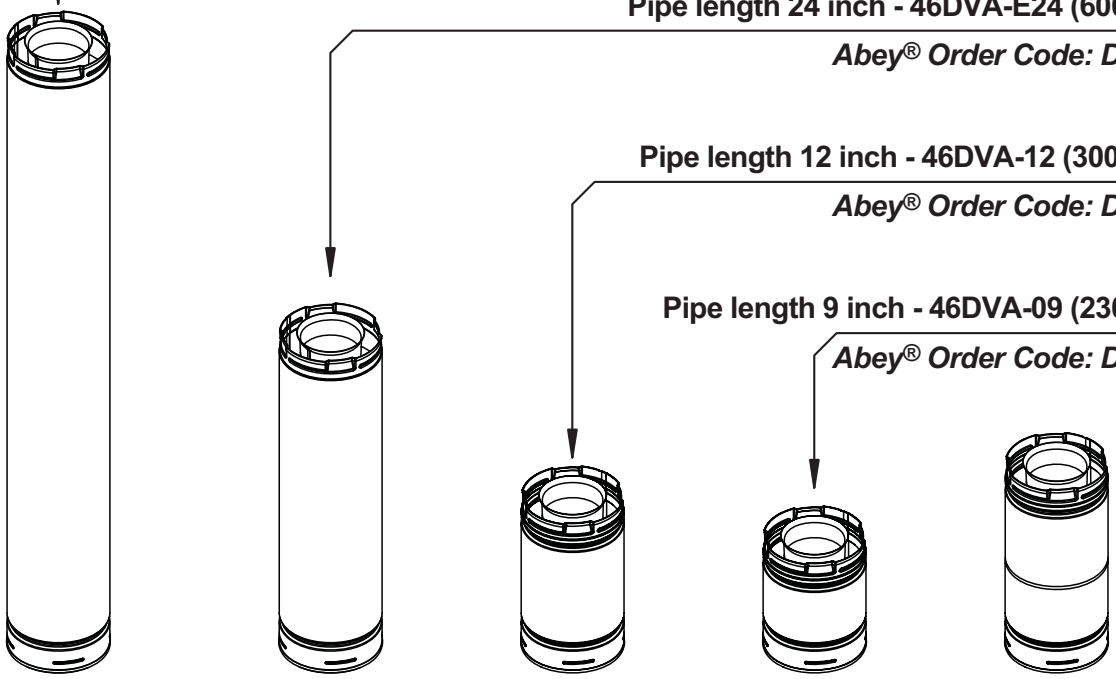

Adjustable Pipe Length 11 - 14 inch - DV911B (275 - 375mm)

Abey® Order Code: DV911

90° Elbow - 46DVA-E90

Abey® Order Code: DV990G

45° Elbow - 46DVA-E45

Abey® Order Code: DV945G

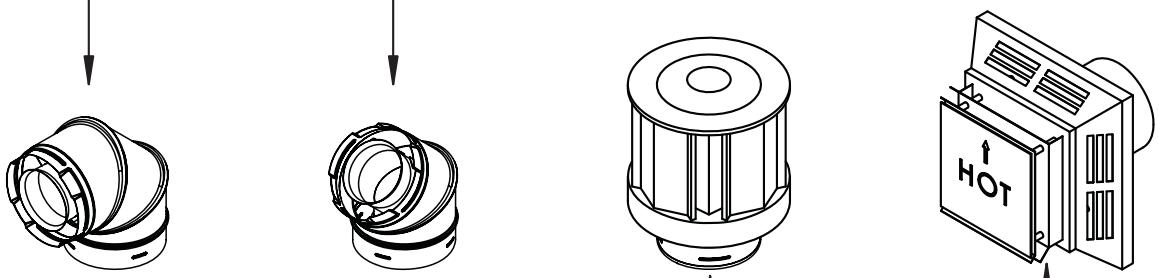

High Wind Terminal Cap - 46DVA-VCH

Abey® Order Code: DV991

Square Horizontal Terminal Cap - 46DVA-E48 (600mm)

Abey® Order Code: DV984

PLEASE NOTE: Also available in 900 mm - Flue Length Part No. RDV903

HEATER INSTALLATION

HEATER INSTALLATION OVERVIEW

READ THIS MANUAL THOROUGHLY AND GAIN A FULL UNDERSTANDING OF THE REQUIREMENTS BEFORE UNDERTAKING INSTALLATION.

IMPORTANT

Step 1). CONSTRUCTING THE FRAME
Step 2). UNPACK THE APPLIANCE AND FASCIA COMPONENTS
Step 3). PREPARING THE APPLIANCE FOR INSTALLATION
Step 4). INSERT AND FIX THE APPLIANCE TO THE FRAME WORK
Step 5). CONNECT FLUE AND INSTALLING THE FLUE RESTRICTOR
*Flue restrictor required for vertical and vertical off-set flue installation.
Step 6. CONNECT THE APPLIANCE TO CONSUMER GAS PIPING
Step 7). INSTALL THE LOG SET
Step 8). REPLACE THE GLASS PANEL ASSEMBLY
Step 9). CONNECT TO ELECTRICITY SUPPLY
Step 10). COMMISSION THE APPLIANCE
Step 11). NOTE: If using the Square Fasica and surround assembly ensure you connect the RJ45 extension lead supplied with the Square assembly and allow it to dangle outside the heater.
Step 12). COMPLETE THE CLADDING
Step 13). FIT THE SURROUND
Step 14). FITTING THE MESH GUARD & DRESS GUARD FRAME ASSEMBLY

HEATER INSTALLATION - DETAIL

Step 1. CONSTRUCTING THE FRAME

The frame is to be constructed from suitable materials in accordance with local building codes and regulations. Provisions must be made for gas, electricity and flueing. For details refer to HEATER LOCATION and FLUE TERMINAL LOCATION and Step 6 below 'Connecting the appliance to consumer gas piping'.

Step 2. UNPACK THE APPLIANCE

- The heater is supplied in two cartons, check to ensure you have all contents as listed on page (i) at the start of this manual before proceeding.
- **Remove shipping clamps on bottom edge of appliance before attempting to lift heater.**
- Carefully remove carton by removing the straps and lifting the *box off the appliance. Remove all packaging materials and check all components for damage. If *any* damage is evident **DO NOT** install or operate this appliance. Contact your supplier for advice. Before installing the heater, check it is labelled for the correct gas type, (refer to the data label located adhered to the inside of the base body panel of the heater). Refer to the local gas authority for confirmation of gas type if you are in doubt. *Note: Retain the card board carton for use in the next step.

This appliance is not supplied with Flue components. These are purchased separately. Only 'Abey®' Flueing components referred to in these instructions can be used.

NOTE

Step 3. PREPARING THE APPLIANCE FOR INSTALLATION

To protect the floor lay the cardboard carton out flat in front of where the heater is to be fitted.

1. Carefully remove the 'Glass Panel Assembly' ⑤, by removing the 4 retaining screws top and bottom. Carefully place it safely aside.
2. Very carefully remove the log set from the combustion chamber taking care not to scrape the lining or to damage the main burner.

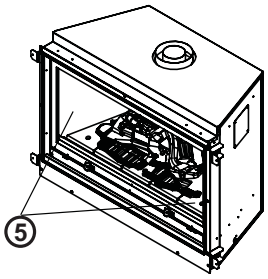

3. Remove the 'Lower Horizontal Cover Panel' ⑥ and the 'Manual Control Switch Panel', ⑦. Ensure you disconnect the RJ45 Connector from the manual control switch ④a, before pulling this panel away. (Bevelled Fascia model only.

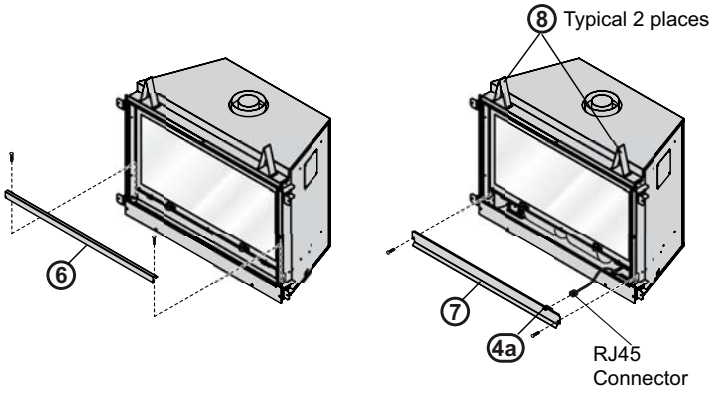

4. Extend and fasten the Lintel Stand-Off Brackets ⑧.

240 VOLTS, RISK OF ELECTRICAL SHOCK!
Before proceeding ensure the appliance is disconnected or isolated from mains power.

WARNING

Step 4 . INSERT AND FIX THE APPLIANCE TO THE FRAME WORK

Carefully manoeuvre the appliance into the enclosure frame ensuring that both the consumer gas piping and the flue system are aligned correctly with the appliance connections.

NOTE: The flue system must be fully assembled, located and secured into place before the heater is installed into the enclosure frame. Refer to page 30 for flue details.

The flue system must be supported independently of the appliance.

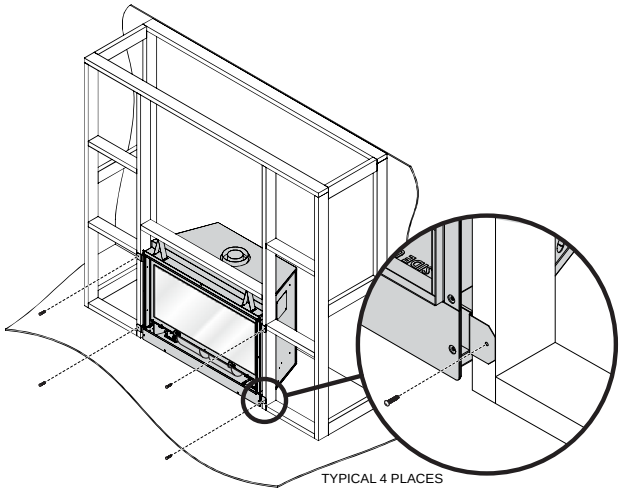

HEATER INSTALLATION

Step 5. CONNECT FLUE AND INSTALLING THE FLUE RESTRICTOR

Connect the Abey® Flue to the flue outlet at the top of the appliance.
A flue restrictor is required for Vertical and Vertical Off-set installations.
If a flue restrictor is required install as follows:

Step 1. Remove the pilot cover panel by tilting up and back and lifting out from its location slots.

Step 2). Carefully remove the burner pad assembly by carefully but firmly grasping the burner and lifting in an upward and forward motion.

Step 3). Fit the flue restrictor choosing the appropriate baffle position. See images below.

Step 4). Carefully replace the burner pad assembly ensuring it locates correctly over the locating tabs fixed to the base of the burner box.

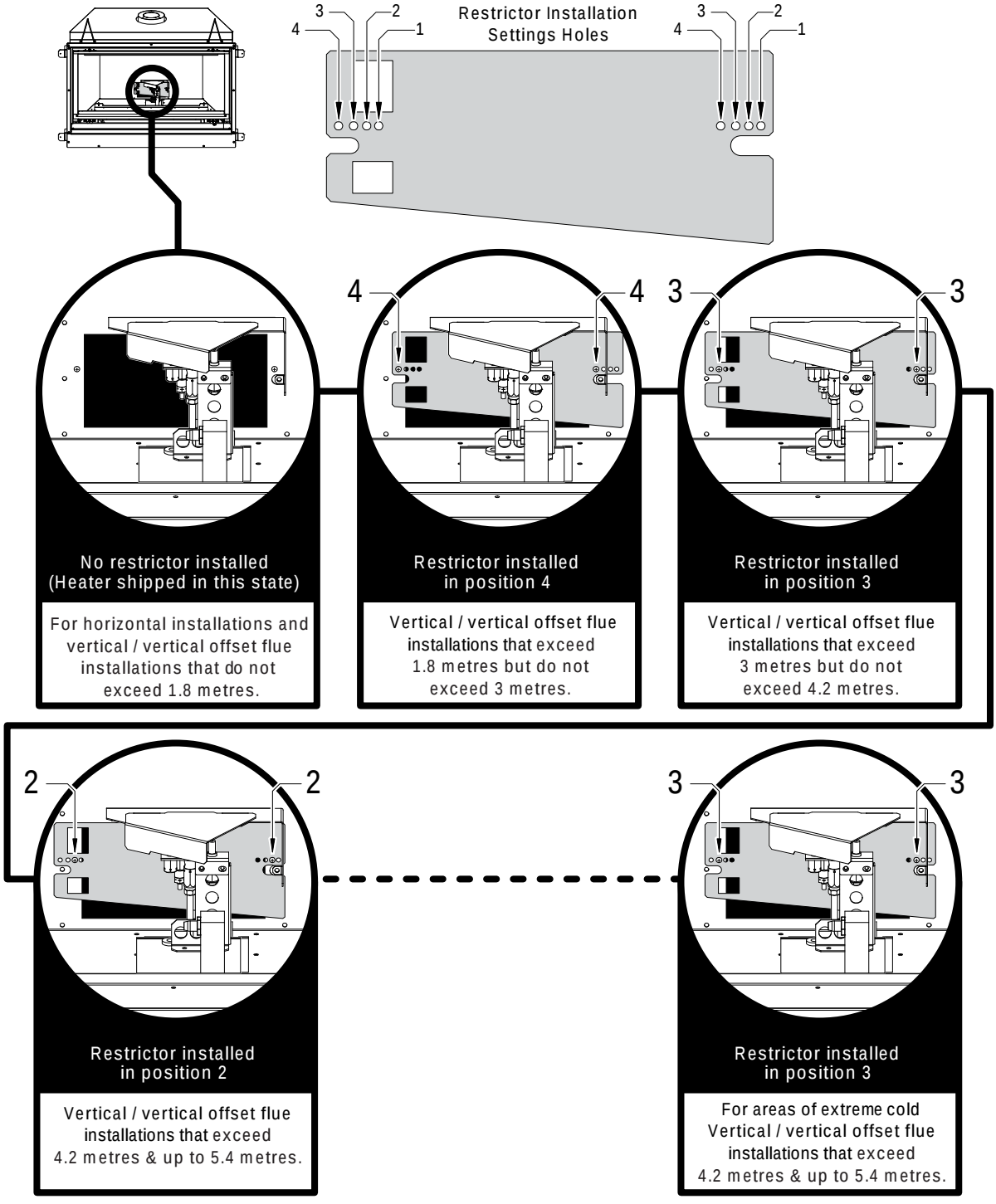

PLEASE NOTE: Also available in 900mm Flue Length Part No. RDV903

Step 6 . CONNECT THE APPLIANCE TO CONSUMER GAS PIPING

The gas inlet connection is located at the bottom front left of the appliance,

1. Remove the brass nut from the 1/2" flared threaded gas inlet located at the bottom left side of the appliance. Refer to 'front view' in drawing below, ensure the brass nut supplied is used.
2. Attach the gas supply pipe to the appliance gas inlet and tighten.
3. Leak test the connection.

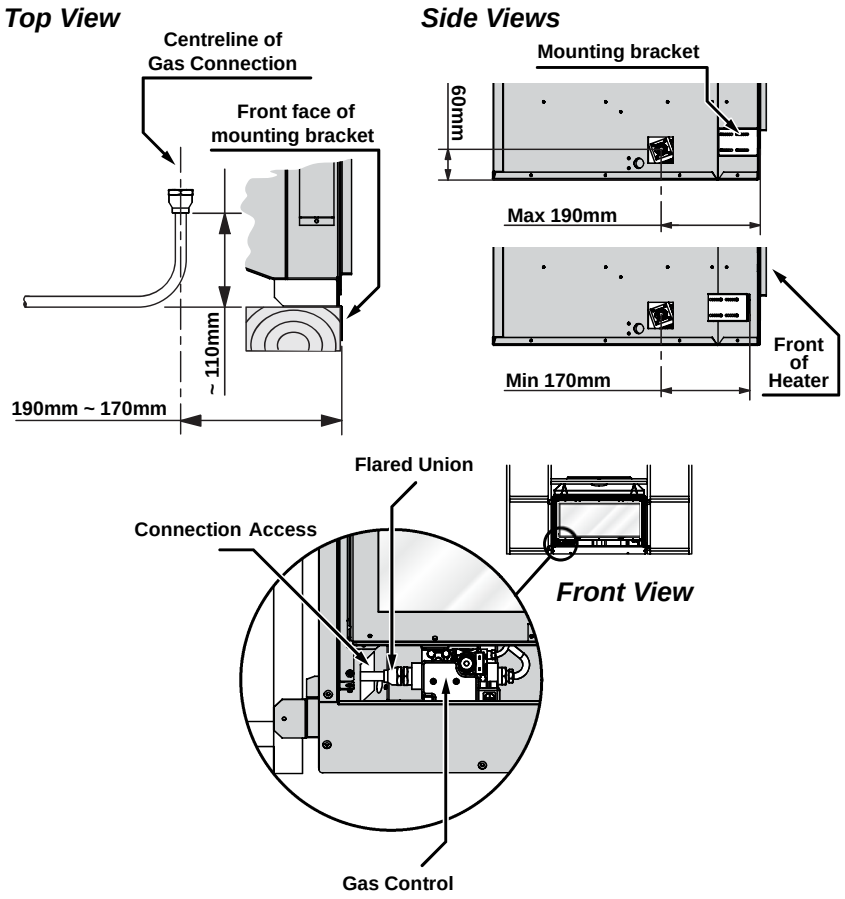

CAUTION

USE A SOAPY SOLUTION TO TEST ALL GAS CONNECTIONS. IF A LEAK IS PRESENT BUBBLES WILL FORM AT THE LEAK POINT. WHEN FINISHED REMOVE ANY RESIDUE WITH A RAG. PREVENT ANY SOAPY SOLUTION FROM COMING IN CONTACT WITH ELECTRICAL COMPONENTS.

Step 7. INSTALL THE LOG SET

NOTE

For clarity the drawings are displayed without showing the entire heater.

DO NOT remove the burner from heater to install the log set.

Use extreme care when handling the Log Set components, they are made from a very fragile high temperature material and will damage if handled roughly. Only remove the components from their packaging as required.

The log set must be installed in the precise order following. Ensure main burner is clean and free from particles and all packaging material.

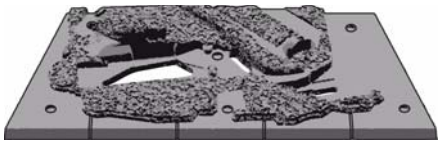

Piece 1. Log with rock attached.

Rock end and left hand bottom edge into burner body locate this piece.

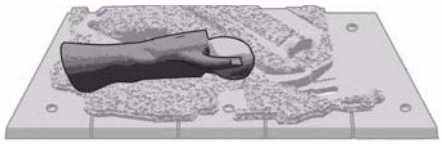

Piece 2. Long curved log.

Location on the front left bottom edge and the rear end bottom edge into the burner body recess.

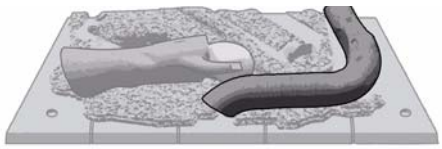

Piece 3. Stocky chipped log.

Location is flat on the rear bottom edge into the burner and nestles on the top of 'Piece 1'.

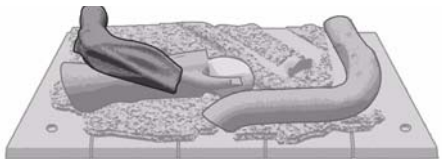

Piece 4. Branching Segment.

Nestles in 'U' shaped groove with a keyed section into the burner, the front rests on 'Piece 2'

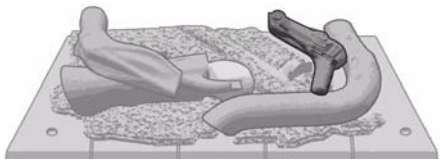

Piece 5. Bowed log.

Right and left ends locates in recesses in pieces 2 & 3 consecutively. The middle of this piece has a 'knot' which has point contact with the tip of 'Piece1'.

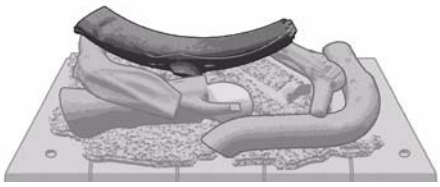

Piece 6 & 7.Stones.

The stones are to be placed over the burner assembly visible at left and right of the burner pad. One over each hole.

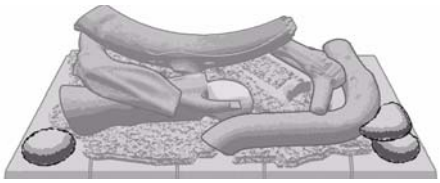

Final layout.

Complete.

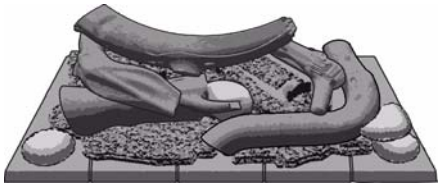

Step 8. REPLACE THE GLASS PANEL ASSEMBLY

Replace glass panel assembly in reverse sequence as instructed in Steps 1-3 on page 33.

WARNING

THE GAS TYPE CODES AND GAS PRESSURES FOR THIS APPLIANCE *MUST* BE CHECKED AND SET IN ACCORDANCE WITH THESE INSTRUCTIONS WHEN THE APPLIANCE IS INSTALLED, *OR* AFTER THE REPLACEMENT OF ANY COMPONENT OR REASSEMBLY AFTER SERVICE.

Step 9. CONNECT TO ELECTRICITY SUPPLY

See page 27 for details.

Step 10. COMMISSION THE APPLIANCE

WARNING

240 VOLTS, RISK OF ELECTRICAL SHOCK!
When performing the commissioning, the appliance electrical power will need to be connected. Exercise CAUTION as there is potential for electric shock from the exposed wiring and circuitry.
DO NOT leave the appliance unattended when power is connected and the panels are removed.
Installation and commissioning must be carried out by an Authorised person.
Wiring inside this appliance may be at 240V potential.
DO NOT test for gas escapes with an open flame.

To check and set burner pressures:

1. Refer to the appliance data plate located inside the appliance on the front of the base panel for correct gas pressure settings.
2. Using a suitable screw driver loosen the captive **A**ppliance **T**est **P**oint **P**ressure screw (ATPP) Ⓓ and fit the manometer, (an electronic manometer is recommended). Refer images for ATPP location.
3. Remove the dust cap Ⓒ from the regulator adjusting screws.
4. **High Pressure Setting:**
   Turn the appliance 'ON' and adjust to the highest setting, see 'How to Operate Your Heater' section page 19. Use a 10 mm spanner to turn nut Ⓐ, lock screw Ⓑ with appropriate screw driver to prevent it turning. Turning nut Ⓐ clockwise increases the outlet pressure whilst turning anti-clock wise decreases the outlet pressure.
5. **Low Pressure Setting:**
   Turn 'OFF' the power to the POV by separating the connector of the two yellow wires that power the POV. The POV will automatically default to 'Low Pressure' operation. Keep the high pressure adjusting nut stationary using a 10 mm spanner. Use an appropriate screwdriver for setting screw Ⓑ. Turning clockwise increases the outlet pressure whilst turning anticlockwise decreases the outlet pressure.
6. Replace the dust cap Ⓒ after pressure adjustments.
7. Reconnect the POV Yellow wires power connection.

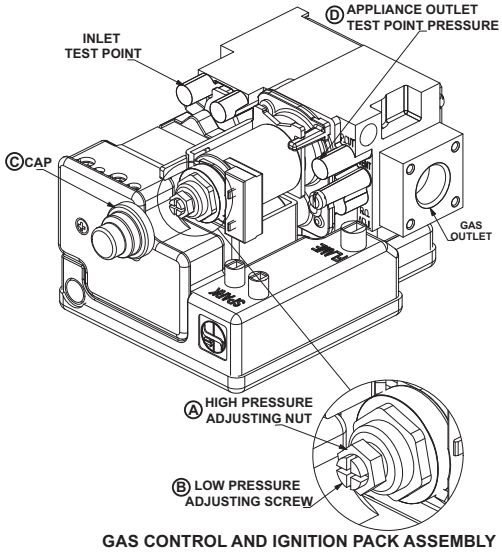

GAS CONTROL AND IGNITION PACK ASSEMBLY

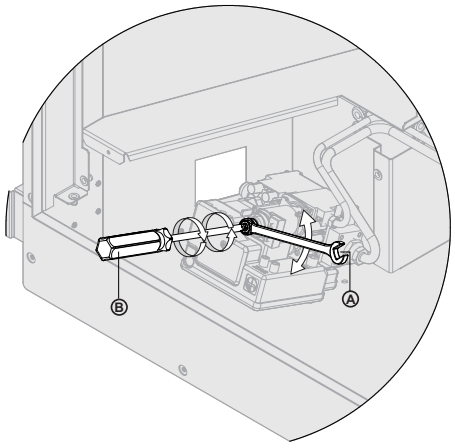

WARNING

To ensure the correct operation of the modulating valve (POV) it is necessary that the dust Cap C is returned to its original location.

8. After re-checking the pressures, turn the appliance 'OFF', remove manometer and tighten the test point sealing screw.
9. Turn the appliance 'ON' and 'OFF' a few times to confirm correct ignition and operation.
10. During the initial burn in period, some smoke and smell may be emitted. The appliance should be run on the high position in a well ventilated room until these dissipate.
11. Check the flame pattern, see 'Abnormal Flame Pattern', section page 23 and page 41.

Step 11. REPLACE PANELS

When satisfied that the appliance is igniting and operating correctly, replace install horizontal cover panel and the manual control switch panel in reverse order of 'Step 3' page 34.

NOTE: If using the Square Fasica and surround assembly ensure you connect the RJ45 extension lead supplied with the Square assembly and allow it to dangle outside the heater.

Step 12. COMPLETE THE CLADDING

Fit the remainder of the cladding. For RDV3610ETR ensure non-combustible material is used in the areas depicted in the drawings below.

RDV3610ETR ONLY

WARNING

Non-combustible cladding dimensions marked below are minimum size requirements only, the non-combustible cladding may extend beyond the dimensions stipulated.

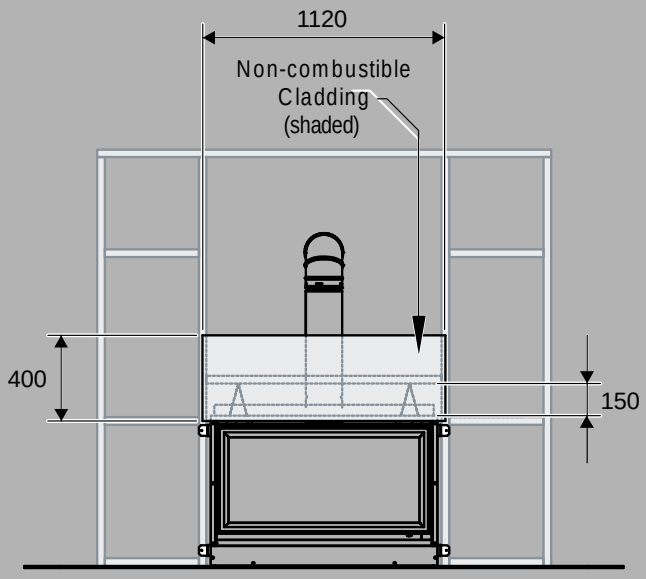

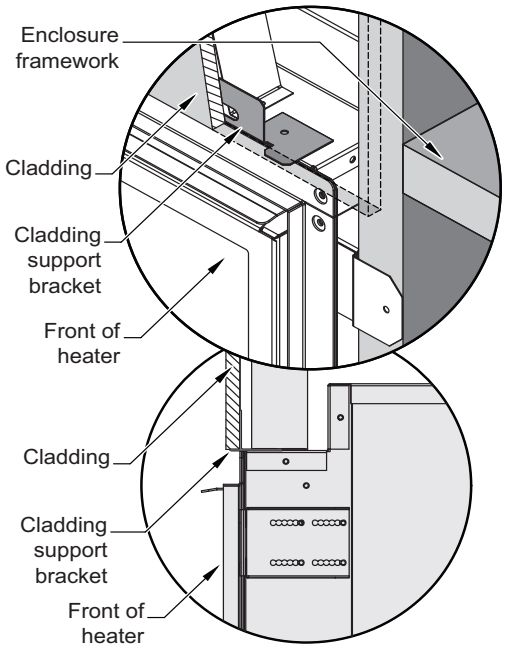

RDV3611ETR

WARNING

Cladding MUST NOT extend lower than the cladding support bracket.

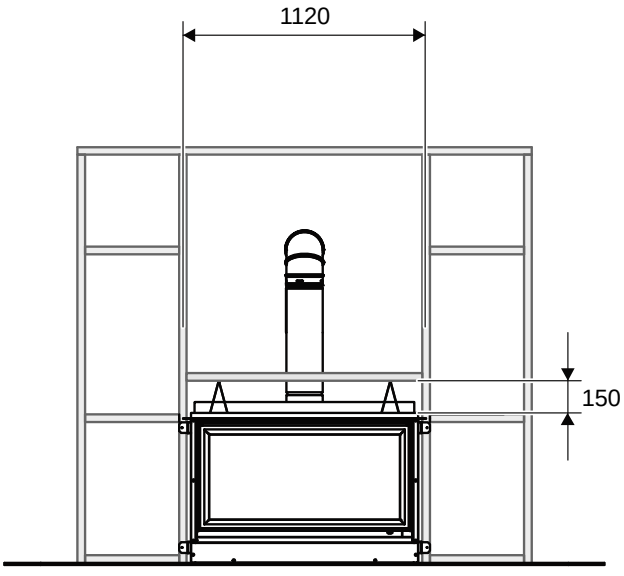

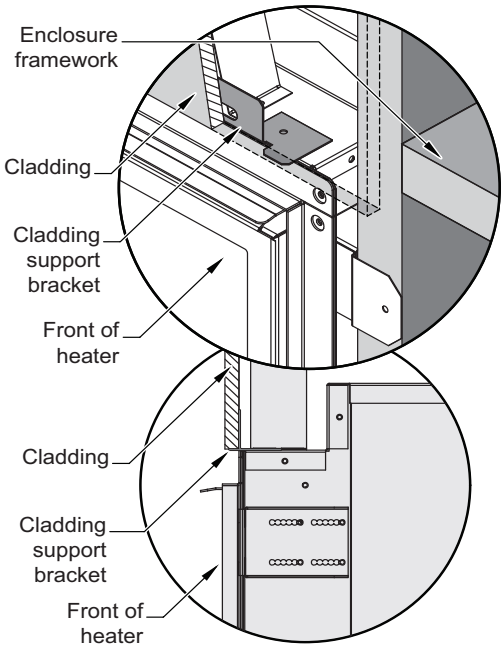

HEATER INSTALLATION

Step 13. FIT THE SURROUND

For Bevelled Surround - Replace the Surround item ③ by replacing the 2 retaining screws located on the inner left hand and the two screws on the inner right hand sides of the burner box.

For Square Surround - Connect the RJ45 extension lead the manual control switch at the top right of the Surround. Fit the Surround item ③ by using the 2 retaining screws located on the inner left hand and the 2 screws on the inner right hand sides of the burner box, cover the lower manual control switch with the blanking sticker supplied with the square fasica.

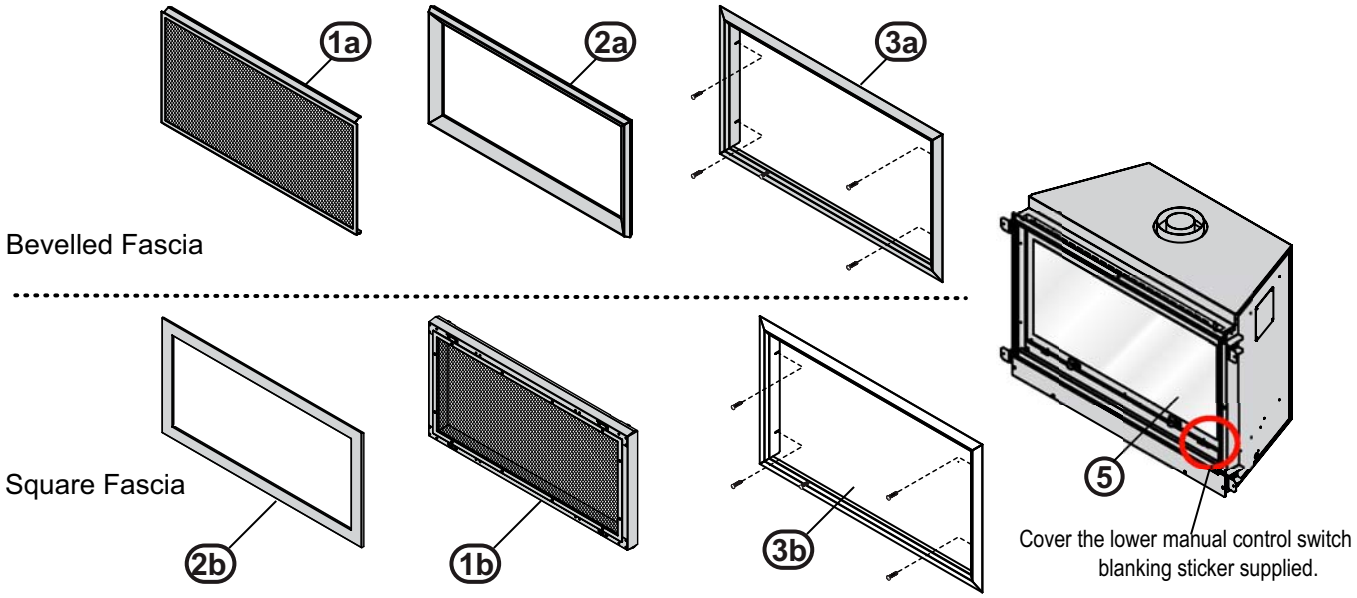

Step 14. FITTING THE MESH GUARD & DRESS GUARD FRAME ASSEMBLY

Replace the 'Mesh Dress Guard and Mesh Dress Guard Frame' assembly items ① & ② by lowering onto the top edge of the Glass Panel assembly, item ⑤ , carefully swing it inward along the bottom edge of the assembly, the assembly will 'snap' into location and be held in there via magnets.

WARNING

Wiring inside this appliance may be at 240V potential.

Qualified persons only must carry out the exchange.

Power must be turned off to the appliance and the appliance electrically isolated.

CAUTION

Failing to electrically isolate the appliance increases the risk of electric shock from exposed wiring and circuitry when cover panels are removed.

DO NOT leave the appliance unattended when power is connected and the panels are removed.

WARNING

The dress guard fitted to this appliance reducing the risk of fire and injury and no part of it should be permanently removed.

For protection of young children or the infirm a secondary guard is required.

NOTE

If the heater is not operating correctly refer to the Trouble Shooting before contacting Rinnai.

It is the responsibility of the installer to check that under normal operating conditions of the appliance, all flue gases are exhausted to the outside atmosphere and that there is no spillage of combustion gases into the room. Please refer to AS/NZS 5601.

During the initial burning in period of approximately 2 hours, some smoke and smell may be experienced. During this period the heater should be operated on High and the space being heated should be well ventilated. It may take up to 20 minutes of operation for the logs to achieve their full flame pattern and glow.

Burner aerations are factory set and can not be adjusted. If you are unable to get the unit to operate correctly refer to Trouble Shooting section of this manual before contacting Rinnai.

ABNORMAL FLAME PATTERN

The Rinnai Symmetry® heater has a distinct flame pattern. This should look the same every time you start your heater, after an initial warm up period of approximately 20 minutes.
Abnormal flame performance and/or pattern can indicate a problem with your heater, such as blocked gas injectors or the artificial logs/burn media have shifted from when the heater was first installed. There are some warning signs that could indicate a problem. If any of the signs occur, please call Rinnai.

Normal	Abnormal
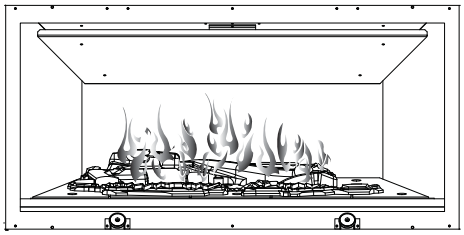	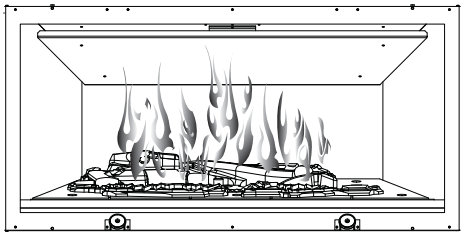

Signs of abnormal flame performance:

- Continuous unusual smell from the appliance.
- Continued difficulty or delay in establishing a flame.
- Flame appears either very short or very long.
- Flame only burns part way across the burner.
- Severe soot building up on the inside of the glass door.

WIRING DIAGRAM

WIRING DIAGRAM

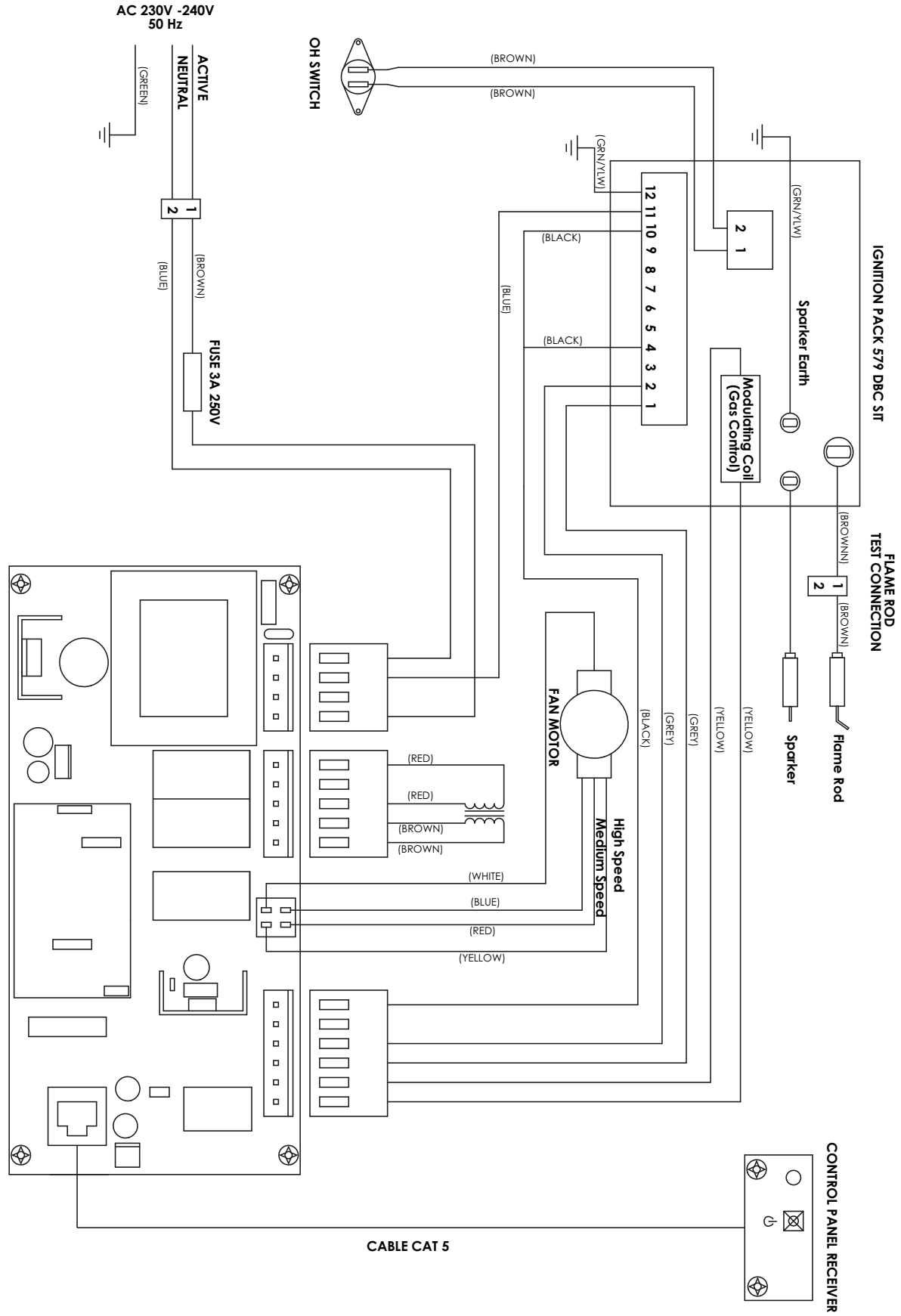

CHECKLISTS

INSTALLATION AND COMMISSIONING CHECKLIST

- Complete the Installation Check List and the Installer details below.
- Instruct customer on the Symmetry® operation.
- Ensure the customer understands the content of this manual.



Advise the customer that during the initial burning period of approximately 2 hours, some smoke and smell may be experienced. During this period the heater should be operated on 'High' and the space being heated should be well ventilated. It may take up to 20 minutes of operation for the logs to achieve their full flame pattern and glow.



The mesh dress guard is fitted to this appliance reducing the risk of fire and injury and no part of it should be permanently removed.

- For protection of young children or the infirm a secondary guard is required.
- Ensure this Operation and Installation manual is left with the customer.



•Ensure the Customer understands that:
•No part of this appliance should be permanently removed.
•Paper or other material must not be burnt in this appliance.
•Young children and the infirm should be supervised at all times.

FINAL CHECKLIST

(To be completed by certified Gas Installer)	NO	/ YES
1. Appliance positioned in a suitable location (clearances, combustible clearances, mantels and surrounds etc).	☐	☐
2. Was a Rinnai approved flue system installed and tested in accordance with the instructions?	☐	☐
3. Gas pressure checked and set?	☐	☐
4. Has the log set / burn media been installed as per instructions?	☐	☐
5. Appliance tested for correct operation and to ensure no gas leaks?	☐	☐
6. Customer instructed on operating procedure and safety requirements	☐	☐
7. Is the end-user fully aware of operating procedure?	☐	☐
8. Has the Mesh Dress Guard been fitted?	☐	☐

Rinnai

Rinnai Australia Pty. Ltd. ABN 74 005 138 769

Head Office

100 Atlantic Drive,
Keysborough, Victoria 3173
P.O. Box 460
Braeside, Victoria 3195
Tel: (03) 9271 6625
Fax: (03) 9271 6622

Internet: www.rinnai.com.au E-mail: enquiry@rinnai.com.au

National Help Line

Tel: 1300 555 545* Fax: 1300 555 655*

Cost of a local call Higher from mobile or public phones.

Rinnai has a Service and Spare Parts network with personnel who are fully trained and equipped to give the best service on your Rinnai appliance. If your appliance requires service, please call our Help Line. Rinnai recommends that this appliance be serviced every 2 years.