MR-700 SERIES
12VDC/24VDC RELAY INSTALLATION GUIDE

PRODUCT SPECIFICATIONS

POWER REQUIREMENTS:	12VDC @ 17.5mA or 24VDC @ 21.2mA per module position
POLARIZED COIL INPUT(S):	Yes
ENERGIZED INDICATOR:	One red LED per module position
CONTACT RATINGS:	Resistive load: 10A @ 120VAC / 30VDC
CONTACT CONSTRUCTION:	Dry form “C” SPDT per module position
AMBIENT TEMPERATURE:	32ºF to 120ºF (0ºC to 49ºC) @ 93% RH (@ 32 ºC) Non-Condensing / Non-Freezing
WIRING:	Solid or stranded: #14 to #22 AWG terminals
“/T” VERSIONS:	3.5" wide, low profile snap track provided with mounting screws
“/S” VERSIONS:	Aluminum spacers provided with #8 X 7/8" self tapping sheet metal screws
“/C” VERSIONS:	Backbox: 18ga CRS, plated with ½" conduit knockouts top and bottom Cover Material: MR-701, MR-702: plastic ABS 94V-0 (“/C” Grey, “/C/R” Red) MR-704, MR-708: CRS 18ga (“/C” Grey, “/C/R” Red)
APPROVALS:	“/S” and “/T” versions: UL Recognized Component (UL864, UOXX2), File #S3403 “/C” and “C/R” versions: UL Listed (UL864, UOXX), File #S3403; CSFM Listed, 7300-1004:110 “C/R” versions: MEA Accepted, 73-92-E Vol. 29

CAUTION: DE-ENERGIZE ALL POWER BEFORE INSTALLATION OR SERVICE
NOTE: INPUT POWER SUPPLY SHOULD BE UL LISTED FOR FIRE PROTECTIVE SIGNALING SYSTEMS WHEN USED IN FIRE ALARM APPLICATIONS

WIRING

(TYPICAL FOR ONE MODULE POSITION)

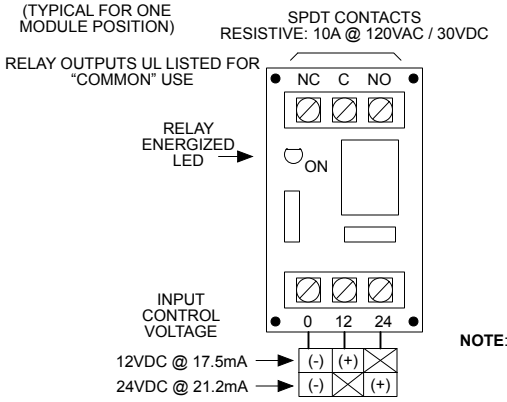

NOTE: DC COIL INPUTS ARE POLARIZED

APPLICATION EXAMPLE

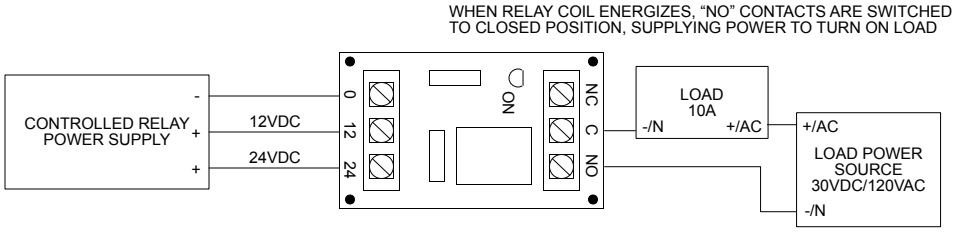

NOTE: THE INPUT CURRENT SHALL NOT EXCEED THE MARKED RATING OF THE PRODUCT

MEA ACCEPTED

UL US LISTED

CSFM LISTED

RECOGNIZED COMPONENT

FOR ADDITIONAL APPLICATION INFORMATION AND/OR ASSISTANCE, PLEASE CONTACT OUR TECHNICAL SUPPORT HOTLINE. (888) 332-2241

© Air Products and Controls Inc. 2013 ◆ 25 Corporate Drive ◆ Auburn Hills, MI 48326 ◆ Ph. (248) 332-3900 ◆ Fax (248) 332-8807 ◆ www.ap-c.com

INST AP-024 D050824
Issue 1