Air Lift™
PERFORMANCE

Kit 75576

Volkswagen
MKV & MKVI Platform
Front Application

(for vehicles with 55mm lower strut diameter)

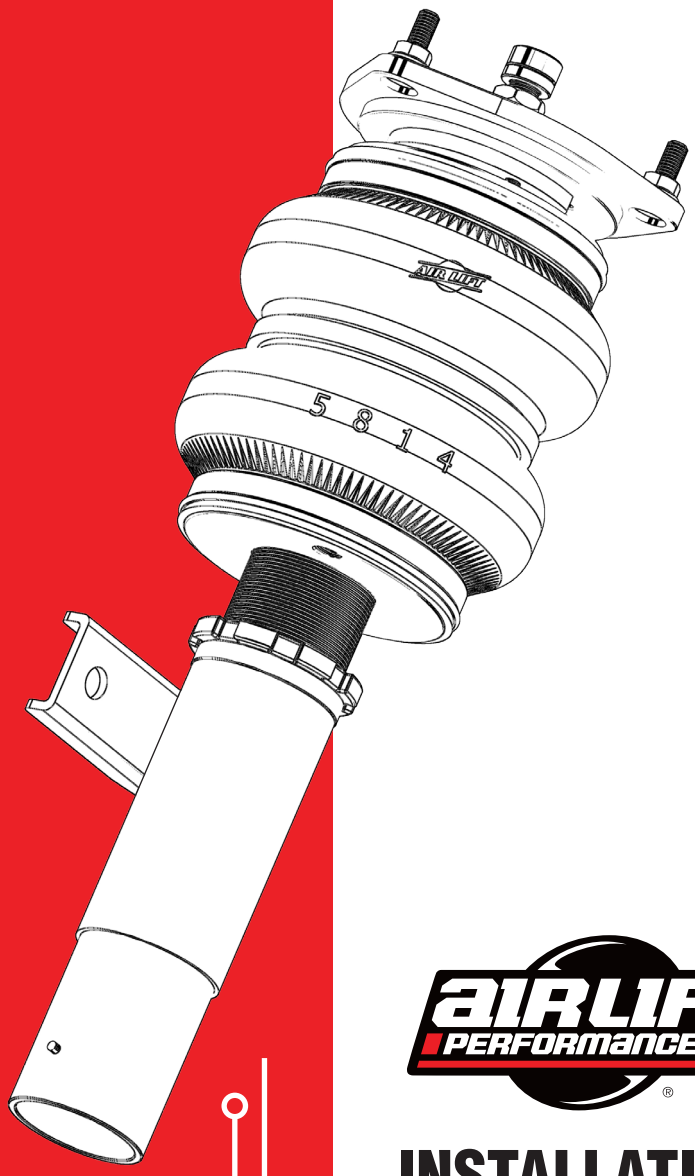

AIR LIFT PERFORMANCE®

INSTALLATION GUIDE

For maximum effectiveness and safety, please read these instructions completely before proceeding with installation.

Failure to read these instructions can result in an incorrect installation.

MN-868 • (011301) • ERN 7470

TABLE OF CONTENTS

Introduction 2
Notation Explanation 2
Important Safety Notices 2

Installation Diagram 3
Hardware List 3
Tools List 3

Installing the Air Suspension 4
Preparing the Vehicle 4
Removing the Strut 4
Installing the New Strut Assembly 5
Aligning the Vehicle 6
Damping Adjustment 7

Before Operating 7
Installation Checklist 8

Product Use, Maintenance and Servicing 9
Suggested Driving and Maximum Air Pressures 9
Maintaining and Operating 9

Troubleshooting Guide 9

Frequently Asked Questions 9

Tuning the Air Pressure 10

Checking for Leaks 10

Fixing Leaks 10

Warranty & Return Policy 11

Replacement Information 11

Contact Information 11

⚠ DANGER

This application is designed for previously modified vehicles where the frame has been notched for axle clearance. Air Lift Company does not recommend frame modification and any modifications previously done are at the owner's risk. Air Lift Company is not liable for vehicle or personal damage due to modifications performed.

Introduction

The purpose of this publication is to assist with the installation, maintenance and troubleshooting of this Volkswagen MKV & MKVI Performance kit.

It is important to read and understand the entire installation guide before beginning installation or performing any maintenance, service or repair. The information includes a hardware list, tool list, step-by-step installation information, maintenance tips, safety information and a troubleshooting guide.

Air Lift Company reserves the right to make changes and improvements to its products and publications at any time. For the latest version of this manual, contact Air Lift Company at (800) 248-0892 or visit our website at www.airliftcompany.com.

NOTATION EXPLANATION

Hazard notations appear in various locations in this publication. Information which is highlighted by one of these notations must be observed to help minimize risk of personal injury or possible improper installation which may render the vehicle unsafe. Notes are used to help emphasize areas of procedural importance and provide helpful suggestions. The following definitions explain the use of these notations as they appear throughout this guide.

⚠ DANGER INDICATES IMMEDIATE HAZARDS WHICH WILL RESULT IN SEVERE PERSONAL INJURY OR DEATH.

⚠ WARNING INDICATES HAZARDS OR UNSAFE PRACTICES WHICH COULD RESULT IN SEVERE PERSONAL INJURY OR DEATH.

⚠ CAUTION INDICATES HAZARDS OR UNSAFE PRACTICES WHICH COULD RESULT IN DAMAGE TO THE MACHINE OR MINOR PERSONAL INJURY.

NOTE *Indicates a procedure, practice or hint which is important to highlight.*

IMPORTANT SAFETY NOTICES

The installation of this kit does not alter the Gross Vehicle Weight Rating (GVWR) or payload of the vehicle. Check your vehicle's owner's manual and do not exceed the maximum load listed for your vehicle.

Gross Vehicle Weight Rating: The maximum allowable weight of the fully loaded vehicle (including passengers and cargo). This number — along with other weight limits, as well as tire, rim size and inflation pressure data — is shown on the vehicle's Safety Compliance Certification Label.

Payload: The combined, maximum allowable weight of cargo and passengers that the vehicle is designed to carry. Payload is GVWR minus the Base Curb Weight.

⚠ WARNING DO NOT INFLATE AIR SPRINGS WHILE OFF OF THE VEHICLE. DAMAGE TO ASSEMBLY MAY RESULT AND VOID WARRANTY.

⚠ CAUTION DO NOT WELD TO, OR MODIFY PERFORMANCE STRUTS/SHOCKS IN ANY WAY. DAMAGE TO UNIT MAY OCCUR AND WILL VOID WARRANTY.

Installation Diagram

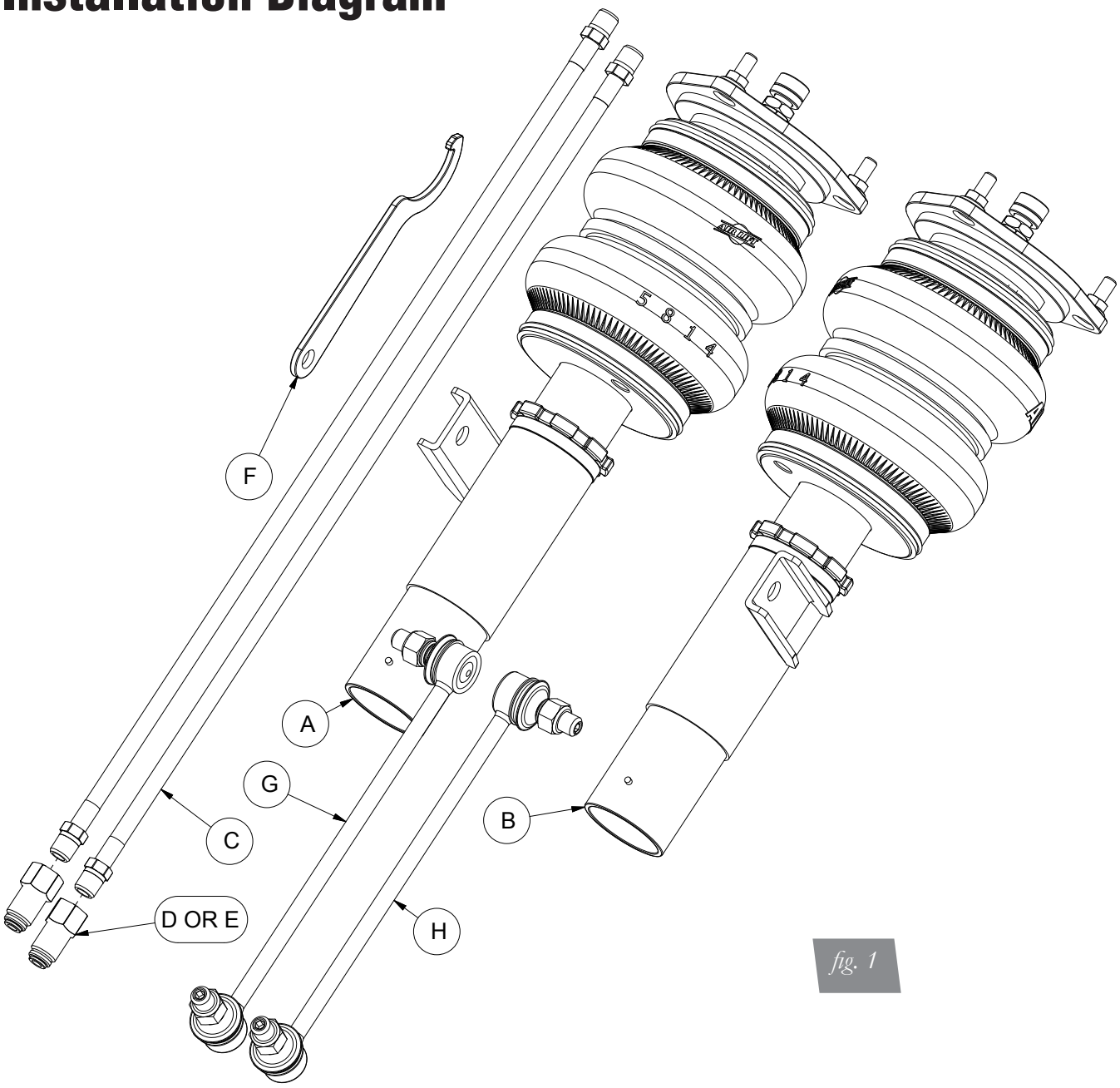

fig. 1

TOOLS LIST

Description
Jack
Jack stands or hoist
Torque wrench
Metric Wrenches
Standard Wrenches
VW Spreader 3424

HARDWARE LIST

Item	Part #	Description	Qty
A	35234	Strut assembly, MKV/VI Front (55mm) R	1
B	35235	Strut assembly, MKV/VI Front (55mm) L	1
C	20997	Leader Hose, 1/4” ID	2
D	21987	Union, 1/4”FNPT X 3/8” PTC, DOT	2
E	21810	Union, 1/4”FNPT X 1/4” PTC, DOT	2
F		Collar Wrench	1
G		End Link - 260mm RIGHT	1
H		End Link - 260mm LEFT	1

STOP! Missing or damaged parts? Call Air Lift customer service at (800) 248-0892 for a replacement part.

Installing the Air Suspension

PREPARING THE VEHICLE

1. Elevate the vehicle and support the body with a hoist or jack stands.
2. Remove the front wheels.

NOTE

If the vehicle is equipped with Automatic Headlight Vertical Aim Control, detach the unit from the lower control arm (fig. 2 - part 1 pictured) to prevent overextension.

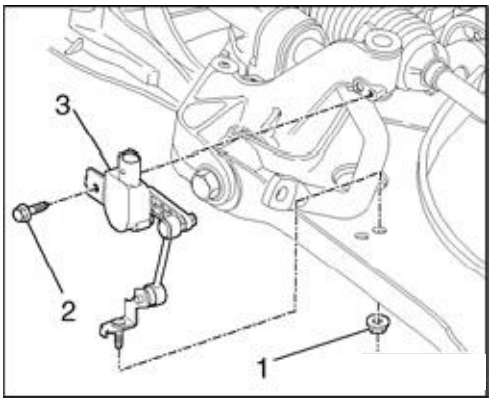

fig. 2

REMOVING THE STRUT

1. Unbolt the sway bar from the tab (fig. 3). Sway Bar removal, see factory repair manual for instructions.
2. Unthread and remove the axle bolt from the hub assembly (fig. 3a).

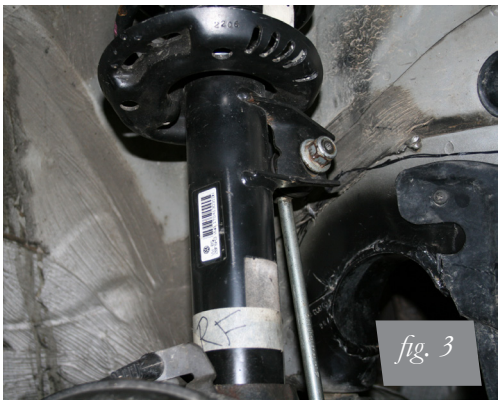

fig. 3



fig. 3a

3. Remove the three lower nuts from the lower ball joint and control arm (fig. 4). Detach the ball joint and hub assembly from the control arm.

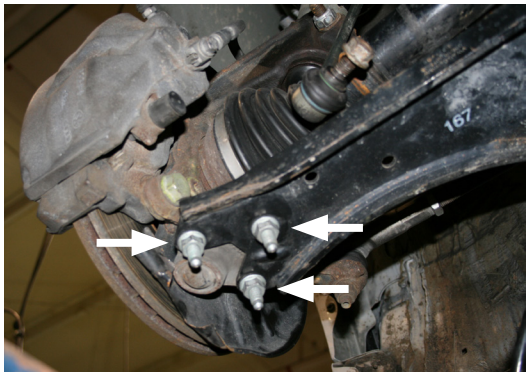

fig. 4

4. Pull drive axle out of the hub assembly and secure the axle to the body with wire.

⚠ CAUTION TO PREVENT DAMAGE TO THE INNER AXLE JOINT, DO NOT ALLOW THE AXLE TO HANG FREE.

5. Reattach the lower ball joint to the lower control arm.
6. Support the hub assembly.
7. Remove the bolt at the back of the hub assembly to the strut.
8. Spread the hub assembly slot and push down on the hub to release the strut from its' lower mount (fig. 5). (Volkswagen specific tool is spreader 3424).



fig. 5

9. Pull weather-stripping away from the plenum chamber cover within the engine bay and pull cover up. Removing the wiper arms and completely removing the cover will gain more access.
10. Remove the three bolts from the upper strut mount (fig. 6) and remove the strut assembly from the vehicle.

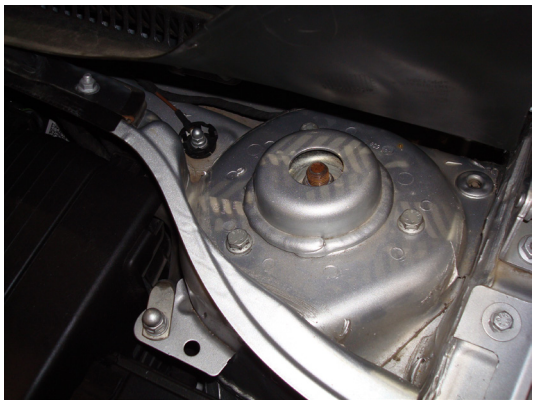

fig. 6

INSTALLING THE NEW STRUT ASSEMBLY

1. Prior to installing the strut, attach the braided line provided to the threaded port at the bottom of the air spring (fig. 7). Seal with Teflon tape or thread sealant. Seal and thread supplied fitting to the end of braided hose.

fig. 7

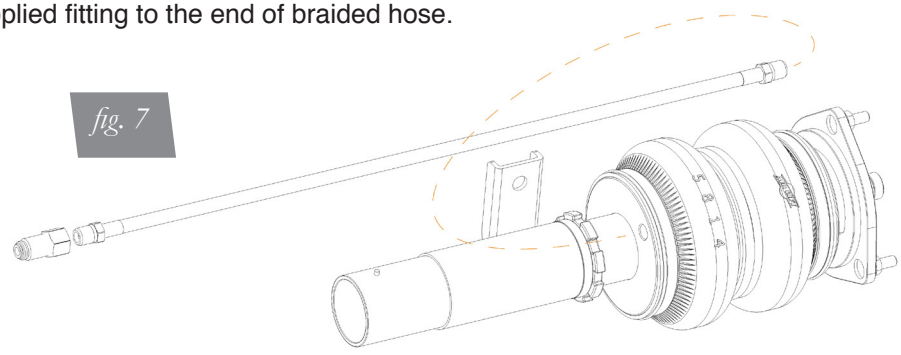

2. Insert strut into the hub assembly. Reinstall the lower mounting bolt and torque to 70 Nm (52 ft/lbs).
3. Lift assembly into strut pocket and align upper mounting bolts with three holes. Using the supplied nuts and washers, tighten the upper mount to 37 Nm (27 ft/lbs).
4. Remove the lower ball joint bolts again and separate the control arm from the joint. Reinsert the axle.
5. Reinstall the ball joint nuts and torque to 60 Nm (44 ft/lbs).
6. Torque the hex head drive axle to 200 NM (148 ft/lbs). If the bolt is a 12 point, torque to 70 NM (52 ft/lbs).
7. Reinstall the plenum chamber cover and wiper arms if previously removed.

Torque Specifications		
Location	Nm	ft. lbs.
Strut Lower Mount Pinch Bolt	70	52
Strut Upper Mount Nuts	37	27
Ball Joint Nuts	60	44
Hex Head Drive Axle Bolt	200	148
12 Point Drive Axle Bolt	70	52
Wheels	120	89

Table 1

8. With the suspension fully compressed, take a measurement from the fender to some reference point, typically the center of the axle. Record this as Max Compression (MC). Cycle the suspension to Max Extension (ME) and record the measurement from the same reference points. Take the difference between the two numbers and divide by two. Add that value to the Max Compression number and then set the suspension to that point (fig. 8). This position gives 50% stroke in either direction and is a great starting point for ride height. At this position torque the lower clevis bolt and lower control arm bolts to manufacturer's specifications (Table 1).

Formula for calculating ride height:

fig. 8

Step 1:	*Step 2:*	*Step 3:*	*Answer:*
$\frac{ME - MC}{X}$	$\frac{X}{2} = Y$	$\frac{Y + MC}{Z}$	**Z = DESIGN HEIGHT**

9. Reinstall wheels; retake the Max Compression and Extension measurements from the fender to lower wheel lip. Recalculate the ride height at 50% stroke and set the vehicle to that height. Enjoy the new look and handling! Please make sure to get an alignment at the preferred drive height.

ALIGNING THE VEHICLE

1. Using the control system, set the vehicle height to the new custom ride height.
2. If the custom ride height is lower than stock, we recommend loosening all pivot points (bolts, nuts) on any control arm, strut arm or radius rod that contains bushings. Once they have been loosened, re-torque to stock specifications.

NOTE

It may be necessary to cycle the suspension to loosen the bushing up from its mount. This will help unload the bushing to make it last longer at its new position based on the custom ride height.

DAMPING ADJUSTMENT

The shocks in this kit have 30 settings or “clicks” of adjustable compression and rebound damping characteristics. Damping is changed through the adjuster at the top of the shock rod. Turn the adjuster clockwise and the damping settings are hardened. Turn the adjuster counterclockwise and the damping is softened. Each rear shock is preset to “-15 clicks”. This means that the shock is adjusted 15 clicks away from full stiff. Counting down from full stiff is the preferred method of keeping track/setting of damping. This setting was developed on a 2008 Volkswagen Jetta and may need to be adjusted to different vehicles and driving characteristics.



fig. 9

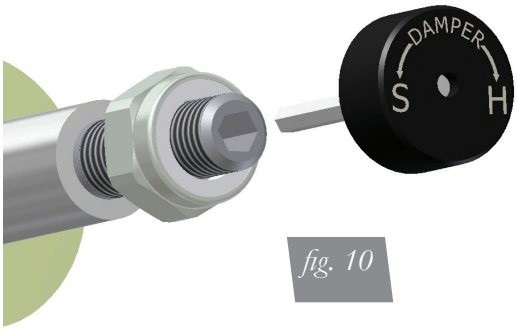

fig. 10

Before Operating

1. Next, completely deflate and reinflate the air bags 2-3 times. This procedure will purge any trapped air in the dampers and allow for maximum performance. For ride performance and the most versatility, Lifestyle recommends setting the strut dial (if equipped) to position 6 or higher.

⚠ CAUTION MAKE SURE THE FRONT WHEELS ARE STRAIGHT WHEN DEFLATING AND REINFLATING AIR BAGS.

2. Inflate and deflate the system (do not exceed 125 PSI) to check for clearance or binding issues. With the air springs deflated, check clearances on everything so as not to pinch brake lines, vent tubes, etc. Clear lines if necessary.
3. Inflate the air springs to 75PSI - 90PSI and check all connections for leaks.
4. Air Lift part #27669 or #27671, AutoPilot V2 Air Management System, is highly recommended for this product.
5. Please continue by reading the Product Use, Maintenance and Servicing section.

INSTALLATION CHECKLIST

- ❑ Clearance test — Inflate the air springs to 55-90 PSI and make sure there is at least ½" clearance from anything that might rub against each sleeve. Be sure to check the tire, brake drum, frame, shock absorbers and brake cables.

- ❑ Leak test before road test — Inflate the air springs to 55PSI - 90PSI and check all connections for leaks. All leaks must be eliminated before the vehicle is road tested.

- ❑ Heat test — Be sure there is sufficient clearance from heat sources, at least 6" for air springs and air lines. If a heat shield was included in the kit, install it. If there is no heat shield, but one is required, call Air Lift customer service at (800) 248-0892.

- ❑ Fastener test — Recheck all bolts for proper torque.

- ❑ Road test — The vehicle should be road tested after the preceding tests. Inflate the springs to recommended driving pressures. Drive the vehicle 10 miles and recheck for clearance, loose fasteners and air leaks.

- ❑ Operating instructions — If professionally installed, the installer should review the operating instructions with the owner. Be sure to provide the owner with all of the paperwork that came with the kit.

Technician's Signature _____

Date _____

POST-INSTALLATION CHECKLIST

- ❑ Overnight leak down test — Recheck air pressure after the vehicle has been used for 24 hours. If the pressure has dropped more than 5 PSI, then there is a leak that must be fixed. Either fix the leak yourself or return to the installer for service.

- ❑ Air pressure requirements — I understand the air pressure requirements of my air spring system. Regardless of load, the air pressure should always be adjusted to maintain adequate ride height at all times while driving.

- ❑ Thirty day or 500 mile test — I understand that I must recheck the air spring system after 30 days or 500 miles, whichever comes first. If any part shows signs of rubbing or abrasion, the source should be identified and moved, if possible. If it is not possible to relocate the cause of the abrasion, the air spring may need to be remounted. If professionally installed, the installer should be consulted. Check all fasteners for tightness.

Product Use, Maintenance and Servicing

Suggested Driving Air Pressure	Maximum Air Pressure
45 PSI	125 PSI
FAILURE TO MAINTAIN ADEQUATE MINIMUM PRESSURE (OR PRESSURE PROPORTIONAL TO LOAD) WILL RESULT IN BOTTOMING OUT, OVER-EXTENSION OR RUBBING AGAINST ANOTHER COMPONENT AND WILL **VOID THE WARRANTY**.	

MAINTENANCE GUIDELINES

NOTE *By following these steps, vehicle owners will obtain the longest life and best results from their air spring.*

1. Check the air pressure before driving.
2. Never inflate beyond 125 PSI.
3. If you develop an air leak in the system, use a soapy water solution to check all air line connections, before deflating and removing the spring.
4. When increasing load, always adjust the air pressure to maintain normal ride height. Increase or decrease pressure from the system as necessary to attain normal ride height for optimal ride and handling. Remember that loads carried behind the axle (including tongue loads) require more leveling force (pressure) than those carried directly over the axle.

⚠ CAUTION FOR YOUR SAFETY AND TO PREVENT DAMAGE TO YOUR VEHICLE, DO NOT EXCEED MAXIMUM GROSS VEHICLE WEIGHT RATING (GVWR), AS INDICATED BY THE VEHICLE MANUFACTURER. ALTHOUGH YOUR AIR SPRINGS ARE RATED AT A MAXIMUM INFLATION PRESSURE OF 125 PSI, THE AIR PRESSURE ACTUALLY NEEDED IS DEPENDENT ON YOUR LOAD.

5. Always add air to the springs in small quantities, checking the pressure frequently. Sleeves require less air volume than a tire and inflate quickly.
6. Should it become necessary to raise the vehicle by the frame, make sure the control system is turned off before lifting.

Troubleshooting Guide

1. Leak test the air line connections, the threaded connection into the air spring, and all fittings in the control system.
2. Inspect the air lines to be sure none are pinched. Tie straps may be too tight. Loosen or replace the strap and replace leaking components.
3. Inspect the air line for holes and cracks. Replace as needed.
4. Look for a kink or fold in the air line. Reroute as needed.

If the preceding steps do not solve the problem, it is possibly caused by a failed air spring — either a factory defect or an operating problem. Please call Air Lift at (800) 248-0892 for assistance.

Frequently Asked Questions

Q. Will installing air springs increase the weight ratings of a vehicle?

No. Adding air springs will not change the weight ratings (GAWR, GCWR and/or GVWR) of a vehicle. Exceeding the GVWR is dangerous and voids the Air Lift warranty.

Q. How long should air springs last?

If the air springs are properly installed and maintained they can last indefinitely.

Q. Will raising the vehicle on a hoist for service work damage the air springs?

No. The vehicle can be lifted on a hoist for short-term service work such as tire rotation or oil changes. However, if the vehicle will be on the hoist for a prolonged period of time, support the axle with jack stands in order to take the tension off of the air springs.

Tuning the Air Pressure

Pressure determination comes down to three things — level vehicle, ride comfort, and stability.

1. **Level vehicle**

   If the vehicle's headlights are shining into the trees or the vehicle is leaning to one side, then it is not level. Raise the air pressure to correct either of these problems and level the vehicle.

2. **Ride comfort**

   If the vehicle has a rough or harsh ride it may be due to either too much pressure or not enough. Try different pressures to determine the best ride comfort. See Air Lift suggested driving air pressure.

3. **Stability**

   Stability translates into safety and should be the priority, meaning the driver may need to sacrifice a perfectly level and comfortable ride. Stability issues include roll control, bounce, dive during braking and sponginess. Tuning out these problems usually requires additional air pressure, strut damping, or both.

Checking for leaks

1. Inflate the air spring to 80 PSI.
2. Spray all connections and the inflation valves with a solution of 1/5 liquid dish soap and 4/5 water. Spot leaks easily by looking for bubbles in the soapy water.
3. After the test, deflate the springs to the minimum pressure required to restore the system to normal ride height.
4. Check the air pressure again after 24 hours. A 2 - 4 PSI loss after initial installation is normal. Retest for leaks if the loss is more than 5 lbs.

Fixing Leaks

1. If there is a problem with a swivel fitting:
   a. Check the air line connection by deflating the spring and removing the line by pulling the collar against the fitting and pulling firmly on the air line. Trim 1" off the end of the air line. Be sure the cut is clean and square (see fig. 11). Reinsert the air line into the push-to-connect fitting.
   b. Check the threaded connection by tightening the swivel fitting another ½ turn. If it still leaks, deflate the air spring, remove the fitting, and re-coat the threads with thread sealant. Reinstall by hand tightening as much as possible and then use a wrench for an additional two turns.
2. If the preceding steps have not resolved the problem, call Air Lift customer service at (800) 248-0892.

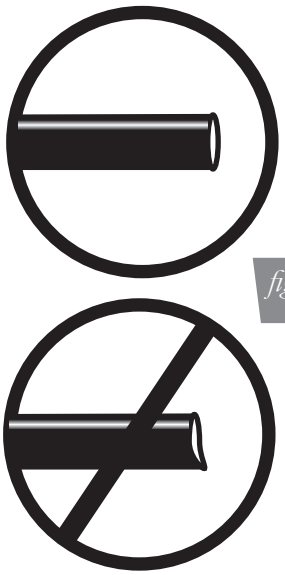

fig. 11

Warranty and Returns Policy

Air Lift Company warrants its performance products for one year to the original purchaser against manufacturing defects one year from the date of purchase when used on cars and trucks as specified under normal operating conditions. The warranty does not apply to products that have been improperly applied, improperly installed, or which have not been maintained in accordance with installation instructions furnished with all products. The consumer will be responsible for removing (labor charges) the defective product from the vehicle and returning it, transportation costs prepaid, to the dealer from which it was purchased or to Air Lift Company for verification.

Air Lift will repair or replace, at its option, defective products or components. A minimum $10.00 shipping and handling charge will apply to all warranty claims. Before returning any defective product, you must call Air Lift at (800) 248-0892 in the U.S. and Canada (elsewhere, (517) 322-2144) for a Returned Materials Authorization (RMA) number. Returns to Air Lift can be sent to: Air Lift Company • 2727 Snow Road • Lansing, MI • 48917.

Product failures resulting from abnormal use or misuse are excluded from this warranty. The loss of use of the product, loss of time, inconvenience, commercial loss or consequential damages is not covered. The consumer is responsible for installation/reinstallation (labor charges) of the product. Air Lift Company reserves the right to change the design of any product without assuming any obligation to modify any product previously manufactured.

This warranty gives you specific legal rights and you may also have other rights that may vary from state-to-state. Some states do not allow limitations on how long an implied warranty lasts or allow the exclusion or limitation of incidental or consequential damages. The above limitation or exclusion may not apply to you. There are no warranties, expressed or implied including any implied warranties of merchantability and fitness, which extend beyond this warranty period. There are no warranties that extend beyond the description on the face hereof. Seller disclaims the implied warranty of merchantability. (Dated proof of purchase required.)

Replacement Information

If you need replacement parts, contact the local dealer or call Air Lift customer service at (800) 248-0892. Most parts are immediately available and can be shipped the same day.

Contact Air Lift Company customer service at (800) 248-0892 first if:

- Parts are missing from the kit.
- Need technical assistance on installation or operation.
- Broken or defective parts in the kit.
- Wrong parts in the kit.
- Have a warranty claim or question.

Contact the retailer where the kit was purchased:

- If it is necessary to return or exchange the kit for any reason.
- If there is a problem with shipping if shipped from the retailer.
- If there is a problem with the price.

Contact Information

If you have any questions, comments or need technical assistance contact our customer service department by calling (800) 248-0892, Monday through Friday, 8 a.m. to 8 p.m. Eastern Time. For calls from outside the USA or Canada, our local number is (517) 322-2144. You may also contact customer service anytime by e-mail at techsupport@airliftperformance.com.

For inquiries by mail, our address is PO Box 80167, Lansing, MI 48908-0167. Our shipping address for returns is 2727 Snow Road, Lansing, MI 48917.

You may also contact our sales team anytime by e-mail at sales@airliftperformance.com or on the web at www.airliftperformance.com.

Notes

Notes

Need Help?

Contact our customer service department by calling (800) 248-0892, Monday through Friday, 8 a.m. to 8 p.m. Eastern Time. For calls from outside the USA or Canada, our local number is (517) 322-2144.

Thank you for purchasing Air Lift Performance products!

Air Lift Company • 2727 Snow Road • Lansing, MI 48917 or PO Box 80167 • Lansing, MI 48908-0167
Toll Free (800) 248-0892 • Local (517) 322-2144 • Fax (517) 322-0240 • www.airliftperformance.com

Printed in
the USA

Air Lift™
PERFORMANCE

Kit 75676

Volkswagen
MKV & MKVI Platform
Independent Rear Application

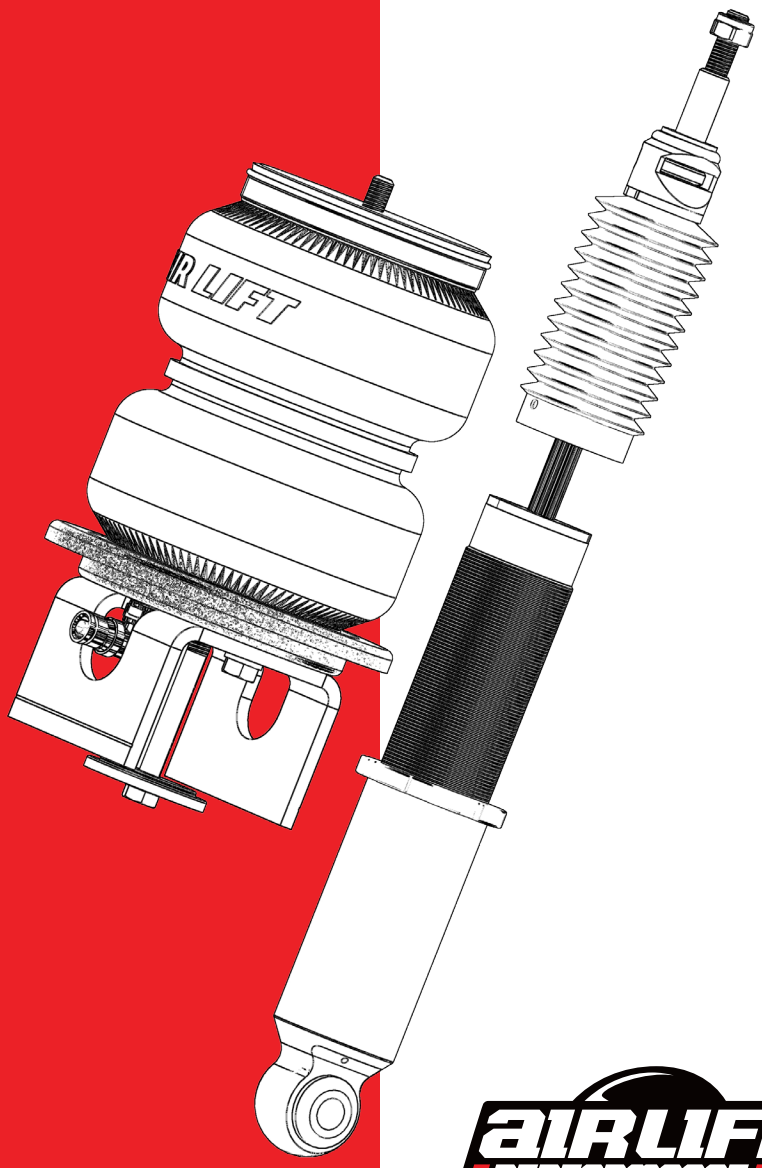

AIRLIFT PERFORMANCE®

INSTALLATION GUIDE

For maximum effectiveness and safety, please read these instructions completely before proceeding with installation.

Failure to read these instructions can result in an incorrect installation.

MN-869 • (011301) • ERN 7470

TABLE OF CONTENTS

Introduction 2
Notation Explanation 2
Important Safety Notices 2

Installation Diagram 3
Hardware List 3

Installing the Rear Shock 4
Preparing the Stock Vehicle 4
Installing the Air Spring 4
Aligning the Vehicle 9
Damping Adjustment 9

Before Operating 10
Installation Checklist 10
Post-Installation Checklist 10

Product Use, Maintenance and Servicing 11
Suggested Driving Air Pressure and Maximum Air Pressure 11
Maintenance Guidelines 11
Troubleshooting Guide 11
Frequently Asked Questions 11
Tuning the Air Pressure 12
Checking for Leaks 12
Fixing Leaks 12

Warranty and Returns Policy 13

Replacement Information 13

Contact Information 13

Introduction

The purpose of this publication is to assist with the installation, maintenance and troubleshooting of this Volkswagen MKV & MKVI Performance kit.

It is important to read and understand the entire installation guide before beginning installation or performing any maintenance, service or repair. The information includes a hardware list, tool list, step-by-step installation information, maintenance tips, safety information and a troubleshooting guide.

Air Lift Company reserves the right to make changes and improvements to its products and publications at any time. For the latest version of this manual, contact Air Lift Company at (800) 248-0892 or visit our website at www.airliftcompany.com.

NOTATION EXPLANATION

Hazard notations appear in various locations in this publication. Information which is highlighted by one of these notations must be observed to help minimize risk of personal injury or possible improper installation which may render the vehicle unsafe. Notes are used to help emphasize areas of procedural importance and provide helpful suggestions. The following definitions explain the use of these notations as they appear throughout this guide.

⚠ DANGER INDICATES IMMEDIATE HAZARDS WHICH WILL RESULT IN SEVERE PERSONAL INJURY OR DEATH.

⚠ WARNING INDICATES HAZARDS OR UNSAFE PRACTICES WHICH COULD RESULT IN SEVERE PERSONAL INJURY OR DEATH.

⚠ CAUTION INDICATES HAZARDS OR UNSAFE PRACTICES WHICH COULD RESULT IN DAMAGE TO THE MACHINE OR MINOR PERSONAL INJURY.

NOTE *Indicates a procedure, practice or hint which is important to highlight.*

IMPORTANT SAFETY NOTICES

The installation of this kit does not alter the Gross Vehicle Weight Rating (GVWR) or payload of the vehicle. Check your vehicle's owner's manual and do not exceed the maximum load listed for your vehicle.

Gross Vehicle Weight Rating: The maximum allowable weight of the fully loaded vehicle (including passengers and cargo). This number — along with other weight limits, as well as tire, rim size and inflation pressure data — is shown on the vehicle's Safety Compliance Certification Label.

Payload: The combined, maximum allowable weight of cargo and passengers that the vehicle is designed to carry. Payload is GVWR minus the Base Curb Weight.

⚠ WARNING DO NOT INFLATE AIR SPRINGS WHILE OFF OF THE VEHICLE. DAMAGE TO ASSEMBLY MAY RESULT AND VOID WARRANTY.

⚠ CAUTION DO NOT WELD TO, OR MODIFY PERFORMANCE STRUTS/SHOCKS IN ANY WAY. DAMAGE TO UNIT MAY OCCUR AND WILL VOID WARRANTY.

Installation Diagram

HARDWARE LIST

Item	Part #	Description	Qty
A	18585	3/8”-16 Nutsert	2
B	18436	3/8”-16 Nut	4
C	17463	3/8”-16 X 2.0” Threaded Rod	2
D	17447	3/8”-16 X 1.25” Threaded Rod	2
E	58531	Air Spring 2B6 Regular (Recess Mount)	2
F	21779	1/4” MNPT X 1/4” PTC Elbow (DOT)	2
G	21851	1/4” MNPT X 3/8” PTC 90° (DOT)	2
H	11801	Roll Plate	2
I	03992	Lower Bracket, MKV Rear	2
J	18427	3/8” Lock Washer	4
K	17101	3/8”-16 X 3/4” Hex Bolt	4
L	13980	Spring Seat Centering Spacer	2
M	17109	3/8”-16 X 3.5” Hex Cap Screw	2
N	17442	3/8”-16 X 3.0” Hex Cap Screw	2

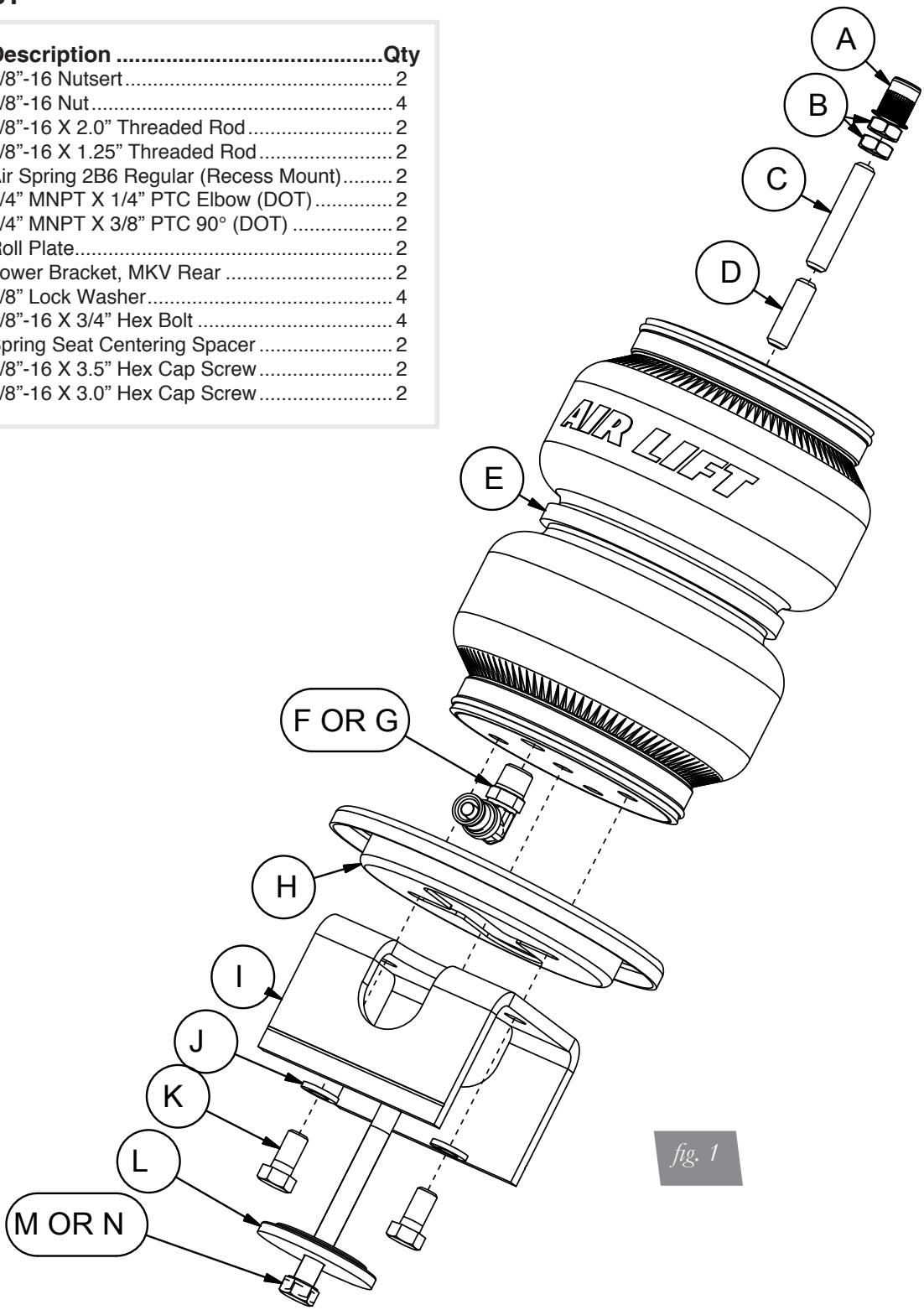

fig. 1

STOP! Missing or damaged parts? Call Air Lift customer service at (800) 248-0892 for a replacement part.

Installing the Air Suspension

PREPARING THE STOCK VEHICLE

1. Elevate the vehicle and support the body with a hoist or jack stands.
2. Remove the rear wheels.

NOTE

If the vehicle is equipped with automatic vertical headlight control, disconnect the coupling rod from the lower transverse link (fig. 2).

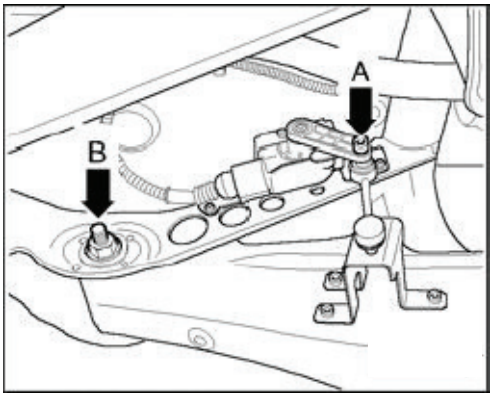

fig. 2

3. To remove the coil spring, it is recommended that you use a spring compressor.

⚠ CAUTION

COIL SPRING UNDER COMPRESSION: THE COIL SPRING CAN BE REMOVED BY SECURELY SUPPORTING THE LOWER TRANSVERSE LINK WITH A JACK AND REMOVING THE LOWER MOUNTING BOLT FROM THE WHEEL BEARING HOUSING. SLOWLY LOWER THE TRANSVERSE LINK UNTIL THE SPRING IS LOOSE AND FREE FROM TENSION.

4. Remove the rubber isolator in the lower transverse link.
5. Disconnect the lower transverse link from the hub.
6. Support the axle carrier and remove the lower shock mount.
7. Unbolt the upper shock bracket and remove the shock from the vehicle.
8. Remove the upper bracket plastic cap and remove the nut shock rod nut. Retain the upper shock bracket and plastic cap for later use.

INSTALLING THE REAR SHOCK

1. The rear shocks supplied in this kit are height adjustable through the use of the threaded lower mount. The shocks are threaded all the way down for maximum drop height. To adjust the height, loosen the locking collar and thread the shock cartridge in or out of the lower mount. Lock the shock cartridge in-place by torqueing the collar against the lower mount 45 degrees beyond hand tight.

    a. Thread the out to 300mm to match the compressed height of Bilstein Sport shocks (ideal height for Golf R). Figure 3

fig. 3

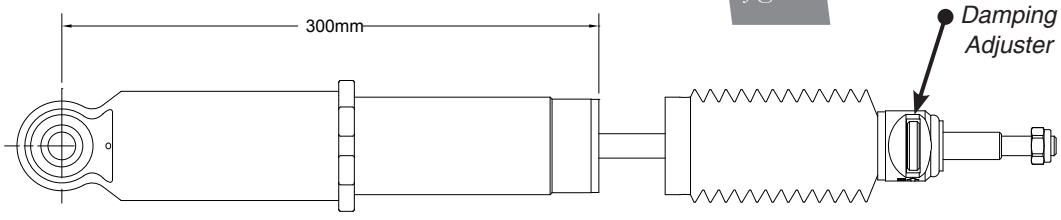

2. Attach the factory upper shock mount to the shock using the supplied nut and torque to 25NM (18ft-lbs).
3. Reattach the shock upper bracket to the chassis and toque bolts to 45Nm (33ft-lbs).
4. Align the lower shock eye with the axle carrier and reinstall the lower shock bolt. Do not torque at this time.
5. Use a 17/32" drill bit to enlarge the hole in the upper coil spring perch. If the upper coil spring perch has been removed, drill in the center of where the perch used to be.
6. The hole must be 17/32" for the nutsert to be effective (figs 3-6).

Factory / OEM Upper Spring Perch


fig. 4


fig. 5

Previously Cut Spring Perch with Aftermarket Shock

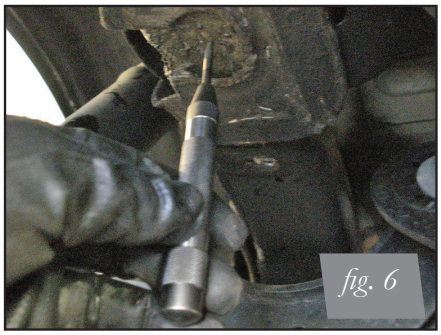
fig. 6


fig. 7

7. Assemble the nutsert and nutsert tool together and insert into the 17/32" hole. Review diagram below on how to attach the nutsert to the vehicle. (fig. 8).

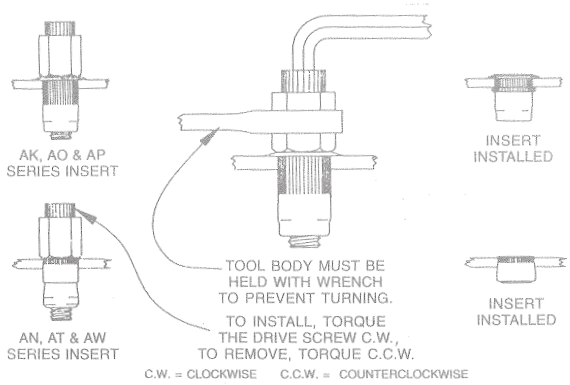

fig. 8

8. Two lengths of threaded studs are included with the kit (C or D, fig. 1). The shorter stud is for vehicles that retain the coil spring perch bump. The longer threaded stud is for vehicles without the spring perch bump. Apply Loctite to the threads of the upper end cap and thread in the appropriate stud. Take the supplied nuts and thread both onto one stud (fig. 9, 10). Using the nuts jammed together, tighten the stud into the end cap until it bottoms (fig. 11). Remove both nuts (fig. 12).

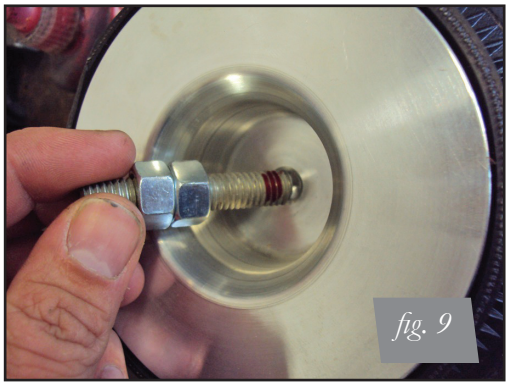
fig. 9

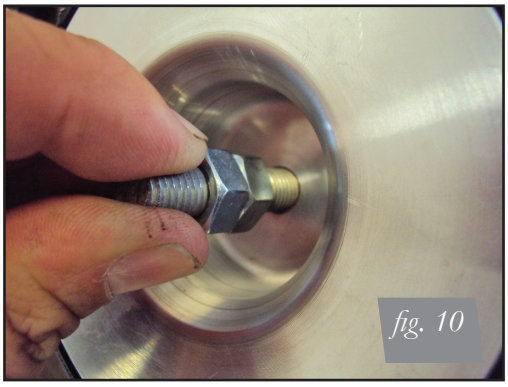
fig. 10



fig. 11

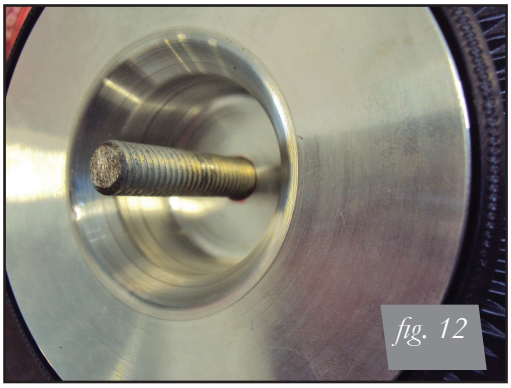
fig. 12

9. Wrap the threads of the fitting with Teflon tape or thread sealant. Tighten the fitting 1 ¾ turns beyond hand tight.
10. Thread the air spring into the lower end cap of the air spring. Tighten by hand (figs. 13, 14 for a factory shock, figs. 15, 16 for an aftermarket shock).

Installation With Factory Shock


fig. 13

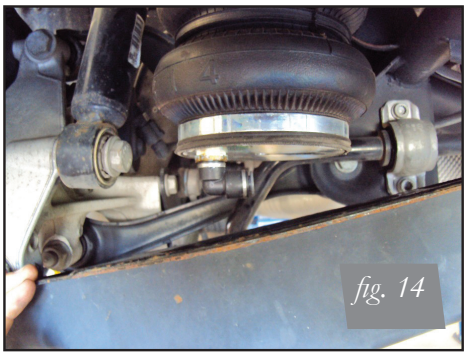
fig. 14

Previously Cut Spring Perch with Aftermarket Shock

fig. 15





fig. 16

11. Orient the air fitting inline with lower transverse link toward the center of the vehicle.
12. The lower bracket in this kit has a scribe line. This indicates the height the bracket should be if using Air Lift rear shocks or shocks that allow for more drop than the factory shock absorbers with half cut jounce bumpers.

⚠ CAUTION

IF RUNNING A SHORTER-THAN-FACTORY SHOCK, THE BRACKET MUST BE TRIMMED DOWN TO PREVENT THE AIR SPRING FROM BEING OVER COMPRESSED AND POTENTIALLY CAUSING A RUPTURE.

13. Attach the lower bracket and roll plate with the lock washer and bolts provided. The roll plate is used with the full length lower bracket. Roll plates are not used with a cut bracket. (See figs. 17-19 for installation with a factory shock, figs. 19-22 for aftermarket shock.)


fig. 17

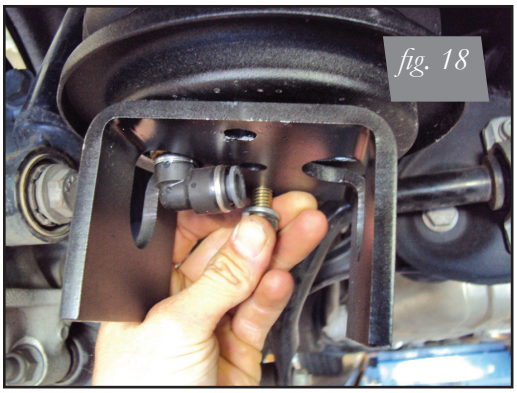
fig. 18

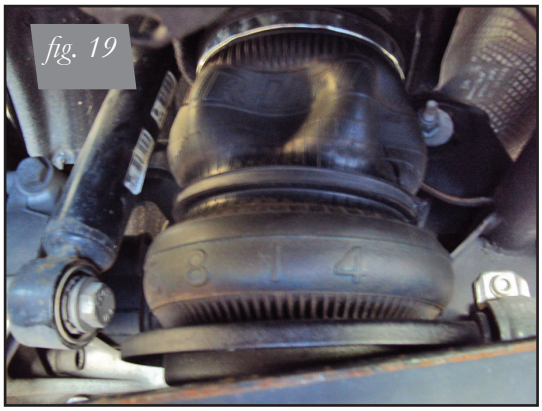
fig. 19

Installation with factory shock, roll plate and un-cut lower bracket

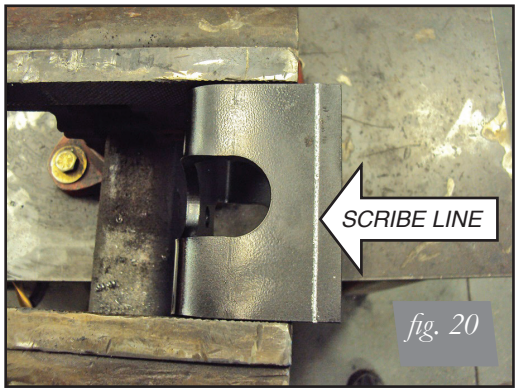

fig. 20

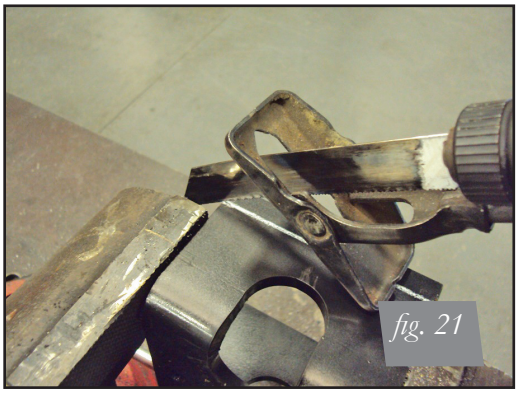
fig. 21

Installation with aftermarket shock, no roll plate and cut bracket (cont'd)


fig. 22


fig. 23

14. Route the air line from the center of the cross-member, through the lower transverse link and attach insert into the air fitting (fig. 24).


fig. 24

15. Reattach the lower transverse link to the hub. Do not torque at this time (fig. 25).

NOTE

If the lower bracket has been cut, the shorter length bolt should be used to secure the assembly to the lower transverse link with the centering washer and lock washer. Uncut brackets use the longer bolt (C or D, fig. 1) (fig. 26).


fig. 25

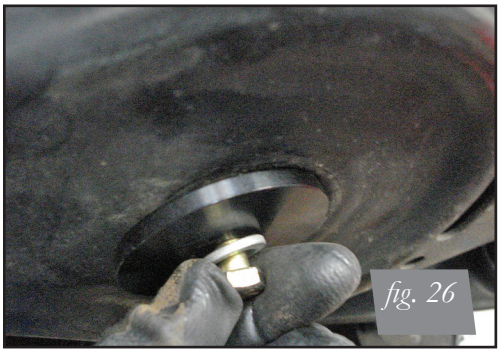
fig. 26

16. With the suspension fully compressed, take a measurement from the fender to some reference point, typically the center of the axle. Record this as Max Compression (MC). Cycle the suspension to Max Extension (ME) and record the measurement from the same reference points. Take the difference between the two numbers and divide by two. Add that value to the Max Compression number and then set the suspension to that point (fig. 27). This position gives 50% stroke in either direction and is a great starting point for ride height. At this position torque the lower clevis bolt, upper and lower control arm bolts to manufacturer's specifications (Table 1).

Formula for calculating ride height

fig. 27

Step 1	*Step 2*	*Step 3*	*Answer*
$\frac{ME - MC}{X}$	$\frac{X}{2} = Y$	$\frac{Y}{Z + MC}$	**Z = DESIGN HEIGHT**

Table 1

Torque Specifications		
Location	Nm	ft. lbs.
Upper bracket to chassis	64	47
Upper shock mount cap	25	18
Axle carrier to shock eye	70	52
Axle carrier to upper control arm ball joint	70	52
Camber adjustment bolt	50	37˚
Upper control arm to subframe	90	67
Rear suspension arm to subframe	90	67
Headlight alignment link	5.4	48 in/lbs
Wheels	103	76

17. Reinstall wheels and retake the Max Compression and Extension measurements from the fender to lower wheel lip. Recalculate the ride height at 50% stroke and set the vehicle to that height. Enjoy the new look and handling! Please make sure to get an alignment at the preferred drive height.

ALIGNING THE VEHICLE

1. Using the control system, set the vehicle height to the new custom ride height.
2. If the custom ride height is lower than stock, we recommend loosening all pivot points (bolts, nuts) on any control arm, strut arm or radius rod that contains bushings (figs. 4 & 5). Once they have been loosened, re-torque to stock specifications (Table 1).

NOTE

It may be necessary to cycle the suspension to loosen the bushing up from its mount. This will help re-orient the bushing at its new position based on the custom ride height.

DAMPING ADJUSTMENT

The shocks in this kit have 30 settings or “clicks” of adjustable compression and rebound damping characteristics. Damping is changed through the adjuster at the top of the shock rod. Turn the adjuster clockwise and the damping settings are hardened. Turn the adjuster counterclockwise and the damping is softened. Each rear shock is preset to “-15 clicks”. This means that the shock is adjusted 15 clicks away from full stiff. Counting down from full stiff is the preferred method of keeping track/setting of damping. This setting was developed on a 2008 Volkswagen Jetta and may need to be adjusted to different vehicles and driving characteristics.

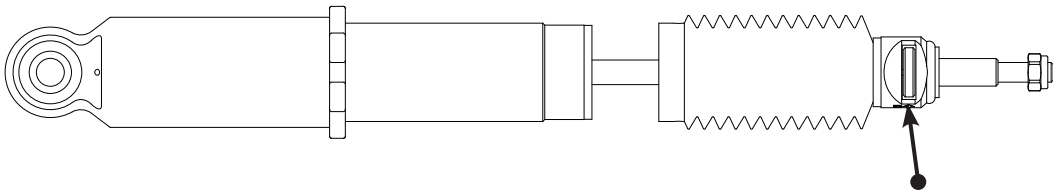

fig. 28

Before Operating

⚠ CAUTION MAKE SURE THE FRONT WHEELS ARE STRAIGHT WHEN DEFLATING AND REINFLATING AIR BAGS.

1. Inflate and deflate the system (do not exceed 125 PSI) to check for clearance or binding issues. With the air springs deflated, check clearances on everything so as not to pinch brake lines, vent tubes, etc. Clear lines if necessary.
2. Inflate the air springs to 75 PSI - 90 PSI and check all connections for leaks.
3. Air Lift part #27669 or #27671, AutoPilot V2 Air Management System, is highly recommended for this product.
4. Please continue by reading the Product Use, Maintenance and Servicing section.

INSTALLATION CHECKLIST

- ❑ **Clearance test** — Inflate the air springs to 75-90 PSI and make sure there is at least ½" clearance from anything that might rub against each sleeve. Be sure to check the tire, brake drum, frame, shock absorbers and brake cables.
- ❑ **Leak test before road test** — Inflate the air springs to 75 PSI - 90 PSI and check all connections for leaks. All leaks must be eliminated before the vehicle is road tested.
- ❑ **Heat test** — Be sure there is sufficient clearance from heat sources, at least 6" for air springs and air lines. If a heat shield was included in the kit, install it. If there is no heat shield, but one is required, call Air Lift customer service at (800) 248-0892.
- ❑ **Fastener test** — Recheck all bolts for proper torque.
- ❑ **Road test** — The vehicle should be road tested after the preceding tests. Inflate the springs to recommended driving pressures. Drive the vehicle 10 miles and recheck for clearance, loose fasteners and air leaks.
- ❑ **Operating instructions** — If professionally installed, the installer should review the operating instructions with the owner. Be sure to provide the owner with all of the paperwork that came with the kit.

Technician's Signature _____

Date _____

POST-INSTALLATION CHECKLIST

- ❑ **Overnight leak down test** — Recheck air pressure after the vehicle has been used for 24 hours. If the pressure has dropped more than 5 PSI, then there is a leak that must be fixed. Either fix the leak yourself or return to the installer for service.
- ❑ **Air pressure requirements** — Regardless of load, the air pressure should always be adjusted to maintain adequate ride height at all times while driving.
- ❑ **Thirty day or 500 mile test** — Recheck the air spring system after 30 days or 500 miles, whichever comes first. If any part shows signs of rubbing or abrasion, the source should be identified and moved, if possible. If it is not possible to relocate the cause of the abrasion, the air spring may need to be remounted. If professionally installed, the installer should be consulted. Check all fasteners for tightness.

Product Use, Maintenance and Servicing

Suggested Driving Air Pressure	Maximum Air Pressure
40-70 PSI	125 PSI
FAILURE TO MAINTAIN ADEQUATE MINIMUM PRESSURE (OR PRESSURE PROPORTIONAL TO LOAD) WILL RESULT IN BOTTOMING OUT, OVER-EXTENSION OR RUBBING AGAINST ANOTHER COMPONENT AND WILL **VOID THE WARRANTY**.	

MAINTENANCE GUIDELINES

NOTE

By following these steps, vehicle owners will obtain the longest life and best results from their air spring.

1. Check the air pressure before driving.
2. Never inflate beyond 125 PSI.
3. If you develop an air leak in the system, use a soapy water solution to check all air line connections, before deflating and removing the spring.
4. When increasing load, always adjust the air pressure to maintain normal ride height. Increase or decrease pressure from the system as necessary to attain normal ride height for optimal ride and handling. Remember that loads carried behind the axle (including tongue loads) require more leveling force (pressure) than those carried directly over the axle.

⚠ CAUTION

FOR YOUR SAFETY AND TO PREVENT DAMAGE TO YOUR VEHICLE, DO NOT EXCEED MAXIMUM GROSS VEHICLE WEIGHT RATING (GVWR), AS INDICATED BY THE VEHICLE MANUFACTURER. ALTHOUGH YOUR AIR SPRINGS ARE RATED AT A MAXIMUM INFLATION PRESSURE OF 125 PSI, THE AIR PRESSURE ACTUALLY NEEDED IS DEPENDENT ON YOUR LOAD.

5. Always add air to the springs in small quantities, checking the pressure frequently. Sleeves require less air volume than a tire and inflate quickly.
6. Should it become necessary to raise the vehicle by the frame, make sure the control system is turned off before lifting.

TROUBLESHOOTING GUIDE

1. Leak test the air line connections, the threaded connection into the air spring, and all fittings in the control system.
2. Inspect the air lines to be sure none are pinched. Tie straps may be too tight. Loosen or replace the strap and replace leaking components.
3. Inspect the air line for holes and cracks. Replace as needed.
4. Look for a kink or fold in the air line. Reroute as needed. If the preceding steps do not solve the problem, it is possibly caused by a failed air spring — either a factory defect or an operating problem. Please call Air Lift at (800) 248-0892 for assistance.

FREQUENTLY ASKED QUESTIONS

Q. Will installing air springs increase the weight ratings of a vehicle?

No. Adding air springs will not change the weight ratings (GAWR, GCWR and/or GVWR) of a vehicle. Exceeding the GVWR is dangerous and voids the Air Lift warranty.

Q. How long should air springs last?

If the air springs are properly installed and maintained they can last indefinitely.

Q. Will raising the vehicle on a hoist for service work damage the air springs?

No. The vehicle can be lifted on a hoist for short-term service work such as tire rotation or oil changes. However, if the vehicle will be on the hoist for a prolonged period of time, support the axle with jack stands in order to take the tension off of the air springs.

TUNING THE AIR PRESSURE

Pressure determination comes down to three things — level vehicle, ride comfort, and stability.

1. **Level vehicle**

   If the vehicle's headlights are shining into the trees or the vehicle is leaning to one side, then it is not level. Raise the air pressure to correct either of these problems and level the vehicle.

2. **Ride comfort**

   If the vehicle has a rough or harsh ride it may be due to either too much pressure or not enough. Try different pressures to determine the best ride comfort. See Air Lift suggested driving air pressure.

3. **Stability**

   Stability translates into safety and should be the priority, meaning the driver may need to sacrifice a perfectly level and comfortable ride. Stability issues include roll control, bounce, dive during braking and sponginess. Tuning out these problems usually requires additional air pressure, strut damping, or both.

CHECKING FOR LEAKS

1. Inflate the air spring to 80 PSI.
2. Spray all connections and the inflation valves with a solution of 1/5 liquid dish soap and 4/5 water. Spot leaks easily by looking for bubbles in the soapy water.
3. After the test, deflate the springs to the minimum pressure required to restore the system to normal ride height.
4. Check the air pressure again after 24 hours. A 2 - 4 PSI loss after initial installation is normal. Retest for leaks if the loss is more than 5 lbs.

FIXING LEAKS

1. If there is a problem with a swivel fitting:
   a. Check the air line connection by deflating the spring and removing the line by pulling the collar against the fitting and pulling firmly on the air line. Trim 1" off the end of the air line. Be sure the cut is clean and square (see fig. 29). Reinsert the air line into the push-to-connect fitting.
   b. Check the threaded connection by tightening the swivel fitting another ½ turn. If it still leaks, deflate the air spring, remove the fitting, and re-coat the threads with thread sealant. Reinstall by hand tightening as much as possible and then use a wrench for an additional two turns.
2. If the preceding steps have not resolved the problem, call Air Lift customer service at (800) 248-0892.

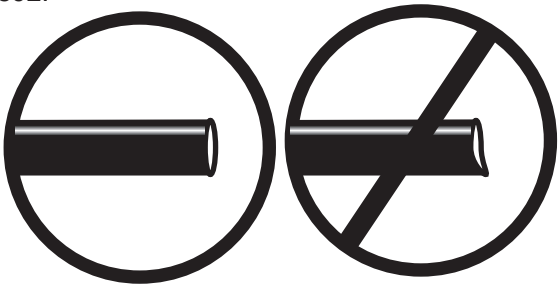

fig. 29

Warranty and Returns Policy

Air Lift Company warrants its performance products for one year to the original purchaser against manufacturing defects one year from the date of purchase when used on cars and trucks as specified under normal operating conditions. The warranty does not apply to products that have been improperly applied, improperly installed, or which have not been maintained in accordance with installation instructions furnished with all products. The consumer will be responsible for removing (labor charges) the defective product from the vehicle and returning it, transportation costs prepaid, to the dealer from which it was purchased or to Air Lift Company for verification.

Air Lift will repair or replace, at its option, defective products or components. A minimum $10.00 shipping and handling charge will apply to all warranty claims. Before returning any defective product, you must call Air Lift at (800) 248-0892 in the U.S. and Canada (elsewhere, (517) 322-2144) for a Returned Materials Authorization (RMA) number. Returns to Air Lift can be sent to: Air Lift Company • 2727 Snow Road • Lansing, MI • 48917.

Product failures resulting from abnormal use or misuse are excluded from this warranty. The loss of use of the product, loss of time, inconvenience, commercial loss or consequential damages is not covered. The consumer is responsible for installation/reinstallation (labor charges) of the product. Air Lift Company reserves the right to change the design of any product without assuming any obligation to modify any product previously manufactured.

This warranty gives you specific legal rights and you may also have other rights that may vary from state-to-state. Some states do not allow limitations on how long an implied warranty lasts or allow the exclusion or limitation of incidental or consequential damages. The above limitation or exclusion may not apply to you. There are no warranties, expressed or implied including any implied warranties of merchantability and fitness, which extend beyond this warranty period. There are no warranties that extend beyond the description on the face hereof. Seller disclaims the implied warranty of merchantability. (Dated proof of purchase required.)

Replacement Information

If you need replacement parts, contact the local dealer or call Air Lift customer service at (800) 248-0892. Most parts are immediately available and can be shipped the same day.

Contact Air Lift Company customer service at (800) 248-0892 first if:

- Parts are missing from the kit.
- Need technical assistance on installation or operation.
- Broken or defective parts in the kit.
- Wrong parts in the kit.
- Have a warranty claim or question.

Contact the retailer where the kit was purchased:

- If it is necessary to return or exchange the kit for any reason.
- If there is a problem with shipping if shipped from the retailer.
- If there is a problem with the price.

Contact Information

If you have any questions, comments or need technical assistance contact our customer service department by calling (800) 248-0892, Monday through Friday, 8 a.m. to 8 p.m. Eastern Time. For calls from outside the USA or Canada, our local number is (517) 322-2144. You may also contact customer service anytime by e-mail at techsupport@airliftperformance.com.

For inquiries by mail, our address is PO Box 80167, Lansing, MI 48908-0167. Our shipping address for returns is 2727 Snow Road, Lansing, MI 48917.

You may also contact our sales team anytime by e-mail at sales@airliftperformance.com or on the web at www.airliftperformance.com.

Need Help?

Contact our customer service department by calling (800) 248-0892, Monday through Friday, 8 a.m. to 8 p.m. Eastern Time. For calls from outside the USA or Canada, our local number is (517) 322-2144.

Thank you for purchasing Air Lift Performance products!

Air Lift Company • 2727 Snow Road • Lansing, MI 48917 or PO Box 80167 • Lansing, MI 48908-0167
Toll Free (800) 248-0892 • Local (517) 322-2144 • Fax (517) 322-0240 • www.airliftperformance.com

Printed in
the USA

Air Lift™
PERFORMANCE

Kit 27666

Manual Air Management System



AIRLIFT PERFORMANCE™

INSTALLATION GUIDE

For maximum effectiveness and safety, please read these instructions completely before proceeding with installation.

Failure to read these instructions can result in an incorrect installation.

MN-726 • (041404) • ECR 7825

TABLE OF CONTENTS

Introduction 2
Important Safety Notice 2
Notation Explanation 2

Hardware List. 3
NPT Assembly Instructions 3
Helpful Tips: Air Line and Fittings 3

Installing the Air Management System 4
Install Components 4
Mounting the Switch Panel 5
Attaching the Air Lines. 5

Troubleshooting Guide. 6

Tuning the Air Pressure 7

Leak Testing and Detection 7

Installation Diagram 8-9

Warranty and Returns Policy 10

Replacement Information 11

Contact Information 11

Electrical Schematic 12

Paddle Switch Mounting Bracket Template 13

16380 Compressor Template 15

Introduction

The purpose of this publication is to assist with the installation, maintenance and troubleshooting of the Air Management System.

It is important to read and understand the entire installation guide before beginning installation or performing any maintenance, service or repair. The information here includes a hardware list, tool list, step-by-step installation information, maintenance guidelines and troubleshooting guide.

Air Lift Company reserves the right to make changes and improvements to its products and publications at any time. For the latest version of this manual, contact Air Lift Company at (800) 248-0892 or visit our website at www.airliftcompany.com.

IMPORTANT SAFETY NOTICE

The installation of this kit does not alter the Gross Vehicle Weight Rating (GVWR) or payload of the vehicle. Check your vehicle's owner's manual and do not exceed the maximum load listed for your vehicle.

Gross Vehicle Weight Rating: The maximum allowable weight of the fully loaded vehicle (including passengers and cargo). This number — along with other weight limits, as well as tire, rim size and inflation pressure data — is shown on the vehicle's Safety Compliance Certification Label.

Payload: The combined, maximum allowable weight of cargo and passengers that the vehicle is designed to carry. Payload is GVWR minus the Base Curb Weight.

NOTATION EXPLANATION

Hazard notations appear in various locations in this publication. Information which is highlighted by one of these notations must be observed to help minimize risk of personal injury or possible improper installation which may render the vehicle unsafe. Notes are used to help emphasize areas of procedural importance and provide helpful suggestions. The following definitions explain the use of these notations as they appear throughout this guide.

⚠ DANGER INDICATES IMMEDIATE HAZARDS WHICH WILL RESULT IN SEVERE PERSONAL INJURY OR DEATH.

⚠ WARNING INDICATES HAZARDS OR UNSAFE PRACTICES WHICH COULD RESULT IN SEVERE PERSONAL INJURY OR DEATH.

⚠ CAUTION INDICATES HAZARDS OR UNSAFE PRACTICES WHICH COULD RESULT IN DAMAGE TO THE MACHINE OR MINOR PERSONAL INJURY.

NOTE *Indicates a procedure, practice or hint which is important to highlight.*

Hardware List

Item	Part #	Description	Quantity
A	16380	Viair 380C Compressor	1
B	11955	4 Gallon Aluminum Air Tank	1
C	26228	Dual Needle Gauge	2
D	21703	Paddle Switch	4
E	11031	Paddle Switch Mounting Bracket	1
F	20946	1/4" Airline	80'
G	10530	Air Line Cutter	1
H	24575	145 - 175 PSI Pressure Switch	1
Paddle Switch Mounting Bracket Hardware			
I	17434	#8 x 3/4" Stainless Steel Screw	4
Tank Mounting Hardware			
J	17188	3/8"-16 x 1.25" Grade 5 Bolt	4
K	18444	3/8" Flat Washer	8
L	18435	3/8"-16 Nyloc Nut	4
Tank Fittings			
M	21737	3/8" Pipe Plug	1
N	21738	1/4" FNPT x 3/8" MNPT Bushing	1
O	21779	1/4" NPT x 1/4" Tube Elbow	2
P	21610	1/8" FNPT x 1/4"MNPT Bushing	1
Q	21633	Inflation Valve	1
R	23586	Thread Sealant	1

Item	Part #	Description	Quantity
Electrical			
S	24782	30/50A Relay	1
T	24608	10 Gauge Red Wire	15'
U	24643	16 Gauge Red Wire	20'
V	24644	16 Gauge Black Wire	10'
W	24537	Quick Splice	3
X	24568	18 Gauge Ring Terminal	2
Y	24594	Blue Female Spade Terminal	9
Z	24748	12 Gauge Ring Terminal 3/8" ID	1
AA	24542	Fuse Tap	1
BB	24561	Mini Fuse Adapter	1
CC	24649	Yellow Butt Connector	1
DD	24595	Yellow Female Spade Terminal	2
EE	17263	1/4" x 1" Self Threading Screw	1
FF	24539	Fuse Holder	1
GG	24547	30A Spade Fuse	1
HH	17132	1/2" Self Threading Screw	2
Gauge and Paddle Switch Fittings			
II	21838	1/4" Union Tee	4
JJ	21842	1/4" Y Tee	3

STOP! Missing or damaged parts? Call Air Lift customer service at (800) 248-0892 for a replacement part.

NPT ASSEMBLY INSTRUCTIONS

1. Inspect the port and fitting ensuring both are free of contaminants and excessive burrs and nicks.
2. Apply a stripe of liquid pipe sealant around the male threads leaving the first two threads uncovered.
3. Screw finger tight into the port.
4. Wrench tighten the fitting to the correct turns past finger tight position (see table 1).

⚠ CAUTION

NEVER BACK OFF AN INSTALLED PIPE FITTING TO ACHIEVE PROPER ALIGNMENT. LOOSENING INSTALLED PIPE FITTINGS WILL CORRUPT THE SEAL AND CONTRIBUTE TO LEAKAGE AND FAILURE.

Table 1

Torque Specifications		
Fitting Size	Turns Past Finger Tight	Torque lb/ft
1/8” NPT	1.5 - 3.0	12
1/4” NPT	1.5 - 3.0	25
3/8” NPT	1.5 - 3.0	40
1/2” NPT	1.5 - 3.0	54
3/4” NPT	1.5 - 3.0	78
1” NPT	1 - 2.5	112
1 1/4” NPT	1 - 2.5	154
1 1/2” NPT	1 - 2.5	211
2” NPT	1 - 2.5	300

HELPFUL TIPS: AIR LINE AND FITTINGS

1. Minimum hose bend radius
   - 1/4” hose = 1” hose bend radius.
2. Hose to fitting
   - No side loading on fitting from hose.
   - Hose straight for 1” before bending.
3. Hose cutting
   - Cut hose perpendicular to hose length.
   - Inspect hose for scratches that run lengthwise on hose prior to insertion.
   - Use proper hose cutter, cigar cutter, or razor on flat surface.
4. DOT/SAEJ844 air brake hose data
   - Maximum working pressure of 175 PSI.
   - Not to be used for frame (body) to un-sprung mass connection, use a braided leader hose for this moving connection.

Table 2

Compressor Tank Pressure		
Viair	Air Lift P/N	Max. Tank Pressure
380C	16380	175
400C	16400	150
444C	16444	175
450C	16450	150

Installing the Air Management System

INSTALL COMPONENTS

NOTE *For a complete schematic, please see fig. 1. (pages 8 – 9)*

Layout

1. Plan component location first.
2. Prior to mounting components, check to make sure:
   - the compressor leader hose will reach the tank.
   - the plumbing will route cleanly through the vehicle.

NOTE *Be sure to install all components as far as possible from any heat sources. Plan and prepare wiring and plumbing routing thru the vehicle. Eliminate all sharp edges that could chafe. Use grommets when passing through compartment walls.*

Prepare and install the compressor

1. Prepare the compressor intake. If inside the vehicle, attach filter to port on end of compressor (fig. 1). If the compressor is located outside the vehicle, snorkel inlet filter to a dry location inside vehicle using components supplied with the compressor.
2. Center punch and drill four holes using the template on page 15.
3. Attach using the hardware supplied with the compressor.

NOTE *Air compressors ingest moisture and will deposit water in the tank. Tanks must be regularly purged to eliminate the possibility of water freezing inside the system or causing corrosion. Be sure to provide easy access to drain/fill valve (preferably outside the vehicle). The system does not include moisture separators or water traps, and does require periodic tank moisture drain. If using an engine driven compressor, proper oil and water filtration must be added as these compressors will contaminate the air suspension system. Water traps are available and sold separately through Air Lift Performance, part numbers: 21011 (1/4”), 21012 (3/8”), 21013 (1/2”).*

Tank pre-assembly (see fig. 1)

1. Determine tank location and orientation prior to installing fittings.
2. Apply thread sealant as necessary to all fittings.
3. Install the drain/fill PTC fitting in the lower most tank threaded port.
4. Choose a tank threaded port for the compressor fitting.
5. Choose the highest tank threaded port for air line supply.
6. Plug any remaining tank ports with hex plugs.

Tank install (see fig. 1)

1. Using the tank feet as a template, drill holes for hardware assembly.
2. Attach the tank using the supplied hardware.
3. Cut an appropriate length of hose from the manifold port T, to the PTC fitting on the tank.
4. Route the drain/fill air line with a schrader valve (preferably outside the vehicle).

NOTE

When cutting plastic air line, only use a standard hose cutter like (Air Lift part number 10530) or razorblade. Cut all hose ends square and as smoothly as possible. See hose cutting tips on page 4.

MOUNTING THE SWITCH PANEL

Refer to the switch panel template on page 13.

1. Find a location to mount the paddle switch mounting bracket (E).
2. Snap all four paddle switches (D) into the paddle switch mounting bracket (E) so the DEL is toward the top.

NOTE

You may select different locations for the paddle switches. The paddle switches do not need to be used with the supplied paddle switch mounting bracket.

3. Cut six pieces of air line (F) the same length (approximately 3”-6”).
4. Push four of these pieces onto the “SUP” port of the switch. Attach two Y fittings (JJ) to the air lines.
5. Push the other two pieces of line into the Y fittings (JJ).
6. Attach the last Y fitting (JJ) to the air lines.
7. Mount the paddle switch mounting bracket (E) with four screws (I).

ATTACHING THE AIR LINES

⚠ CAUTION

WHEN CUTTING OR TRIMMING THE AIR LINE, USE AN AIR LINE CUTTER (G), A RAZOR BLADE OR A SHARP KNIFE. A CLEAN, SQUARE CUT WILL ENSURE AGAINST LEAKS. DO NOT USE WIRE CUTTERS OR SCISSORS TO CUT THE AIR LINE. THESE TOOLS MAY FLATTEN OR CRIMP THE AIR LINE, CAUSING IT TO LEAK.

1. Run a length of air line (F) from the air fitting on the compressor to the end of the switch cluster.
2. Run a length of air line from the remaining air fittings on the switch to its respective air spring.
3. Repeat step 2 for the remaining air fittings and air springs.
4. Use a tee and connect into each one of the air spring lines to connect to it’s respective gauge port.
5. Test and make sure that the switches operate the appropriate air springs.

Troubleshooting Guide

For further technical assistance please contact our customer service department by calling (800) 248-0892, Monday through Friday. For calls from outside the USA or Canada, our local number is (517) 322-2144.

PROBLEM	CAUSE	SOLUTION
Compressor doesn't run	There is a blown fuse or relay, bad ground, or poor electrical connections.	Replace the fuse, check the ground wire, or check the compressor connector
Compressor runs all the time.	The compressor relay is defective or there is a leak.	Replace the relay or locate the leak and repair.
Air spring or tank leak.	Fitting seal or air line is compromised.	Check to make sure air lines are seated in connectors. Inspect fittings with soapy water. Trim hose or re-seal fitting.
Compressors runs all the time but doesn't fill the tank.	Compressor in-line check valve fitting has been overtorqued.	Loosen fitting and check again. Replace if needed.

Tuning the Air Pressure

Pressure determination comes down to three things — level vehicle, ride comfort, and stability.

1. **Level vehicle**

   If the vehicle's headlights are shining into the trees or the vehicle is leaning to one side, then it is not level. Raise the air pressure to correct either of these problems and level the vehicle.

2. **Ride comfort**

   If the vehicle has a rough or harsh ride it may be due to either too much pressure or not enough. Try different pressures to determine the best ride comfort.

3. **Stability**

   Stability translates into safety and should be the priority, meaning the driver may need to sacrifice a perfectly level and comfortable ride. Stability issues include roll control, bounce, dive during braking and sponginess. Tuning out these problems usually requires an increase in pressure.

Leak Testing and Detection

Leak detection

1. A leak can be defined as a loss of pressure of more than 5 psi over an 8 hour period. Be aware that ambient temperature change has an effect on pressure that may seem like a leak. For example: a change of 10˚ Fahrenheit up or down from your baseline will have an approximate gain or loss of indicated pressure of 2 psi. If a leak is suspected after including any temperature change, then proceed to #2.
2. Spray soapy water (1/5 Dawn brand dish soap to 4/5 water) on suspect fittings and hose connections and look for any bubbling caused by air leakage.
3. Fix leaking connection (review pages 3 and 4 for help on NPT fittings and air line connections).
4. Wipe down sprayed connections with rag to remove any residual soapy water.

NOTE *Dawn brand dish soap will not corrode the metals (aluminum, brass, steel) with which it comes into contact.*

Installation Diagram

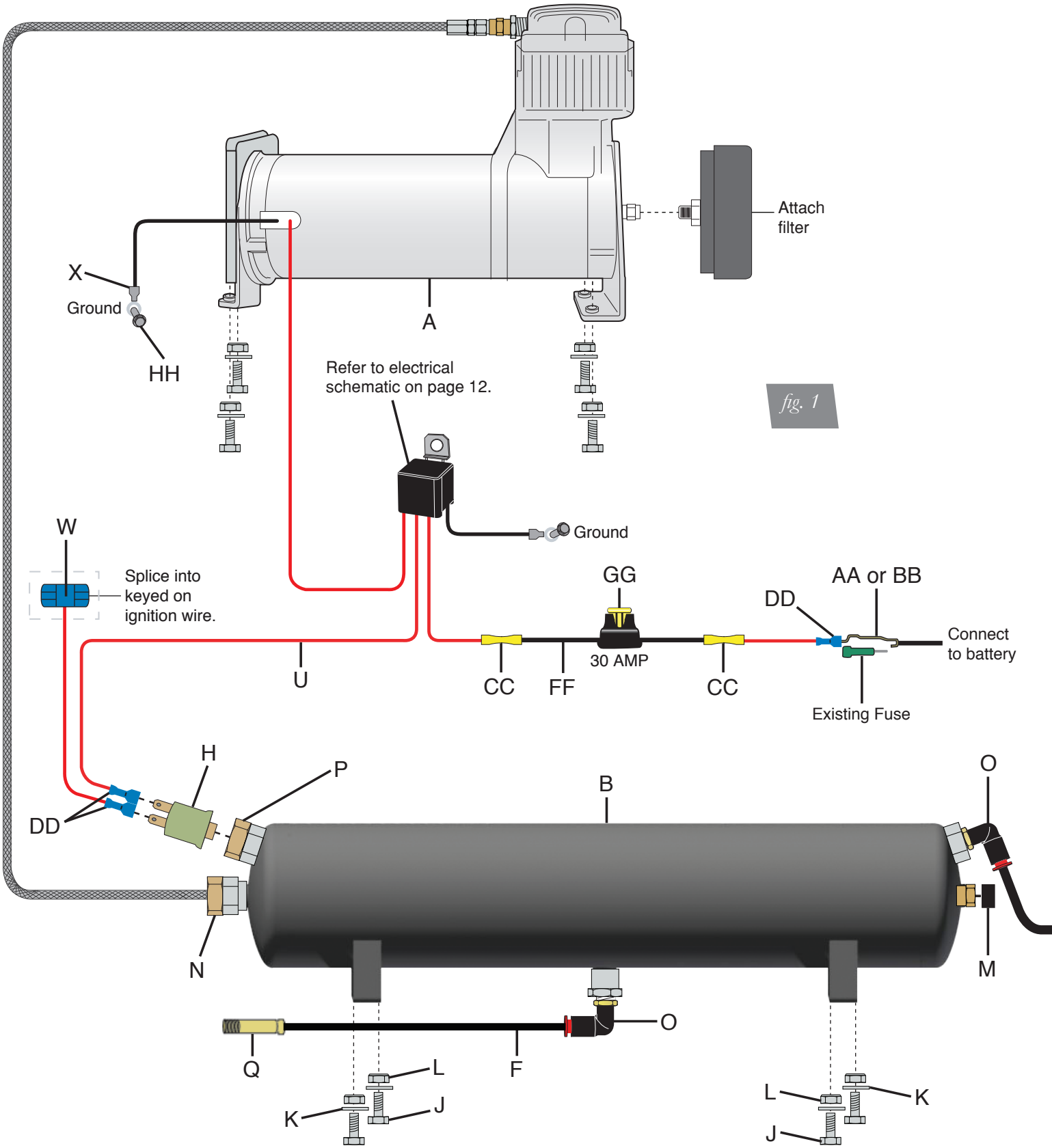

fig. 1

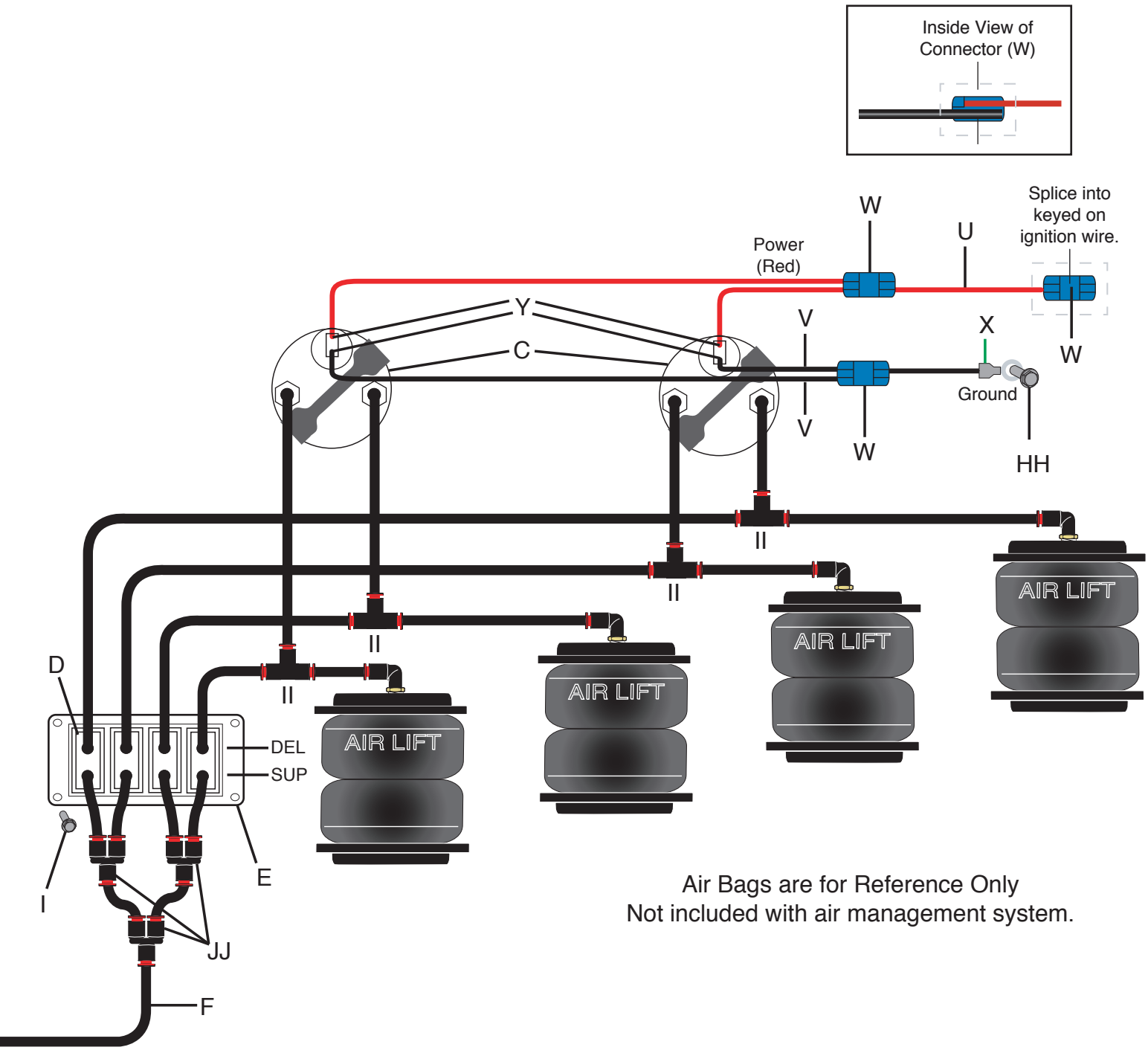

Air Bags are for Reference Only
Not included with air management system.

NOTE: Air Lift recommends using a hose cutting tool to ensure a proper cut.
If a hose connection has been disconnected the hose must be trimmed 1/2" back to provide for a leak free seal.

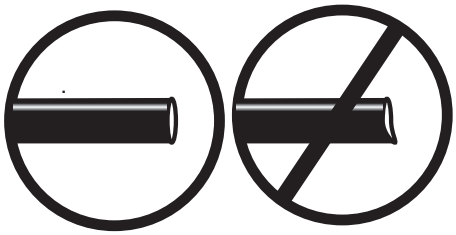

Warranty and Returns Policy

Air Lift Company warrants its products, for the time periods listed below, to the original retail purchaser against manufacturing defects when used on catalog-listed applications on cars, vans, light trucks and motorhomes under normal operating conditions for as long as Air Lift manufactures the product. The warranty does not apply to products that have been improperly applied, improperly installed, used in racing or off-road applications, used for commercial purposes, or which have not been maintained in accordance with installation instructions furnished with all products. The consumer will be responsible for removing (labor charges) the defective product from the vehicle and returning it, transportation costs prepaid, to the dealer from which it was purchased or to Air Lift Company for verification.

Air Lift will repair or replace, at its option, defective products or components. A minimum $10.00 shipping and handling charge will apply to all warranty claims. Before returning any defective product, you must call Air Lift at (800) 248-0892 in the U.S. and Canada (elsewhere, (517) 322-2144) for a Returned Materials Authorization (RMA) number. Returns to Air Lift can be sent to: Air Lift Company • 2727 Snow Road • Lansing, MI • 48917.

Product failures resulting from abnormal use or misuse are excluded from this warranty. The loss of use of the product, loss of time, inconvenience, commercial loss or consequential damages is not covered. The consumer is responsible for installation/reinstallation (labor charges) of the product. Air Lift Company reserves the right to change the design of any product without assuming any obligation to modify any product previously manufactured.

This warranty gives you specific legal rights and you may also have other rights that vary from state-to-state. Some states do not allow limitations on how long an implied warranty lasts or allow the exclusion or limitation of incidental or consequential damages. The above limitation or exclusion may not apply to you. There are no warranties, expressed or implied including any implied warranties of merchantability and fitness, which extend beyond this warranty period. There are no warranties that extend beyond the description on the face hereof. Seller disclaims the implied warranty of merchantability. (Dated proof of purchase required.)

Air Lift 1000™	**Lifetime Limited**	**LoadController/Dual™**	**2 Year Limited**
RideControl™	**Lifetime Limited**	**Load Controller™ (I)**	**2 Year Limited**
LoadLifter 5000™*	**Lifetime Limited**	**Load Controller™ (II)**	**2 Year Limited**
SlamAir™	**Lifetime Limited**	**SmartAir™**	**2 Year Limited**
AirCell™	**Lifetime Limited**	**Wireless AIR™**	**2 Year Limited**
Air Lift Performance™**	**1 Year Limited**	**WirelessONE™**	**2 Year Limited**
LoadController/Single™	**2 Year Limited**	**Other Accessories**	**2 Year Limited**

**formerly SuperDuty*

***formerly LifeStyle & Performance and Easystreet*

Replacement Information

If you need replacement parts, contact the local dealer or call Air Lift customer service at (800) 248-0892. Most parts are immediately available and can be shipped the same day.

Contact Air Lift Company customer service at (800) 248-0892 first if:

- Parts are missing from the kit.
- Need technical assistance on installation or operation.
- Broken or defective parts in the kit.
- Wrong parts in the kit.
- Have a warranty claim or question.

Contact the retailer where the kit was purchased:

- If it is necessary to return or exchange the kit for any reason.
- If there is a problem with shipping if shipped from the retailer.
- If there is a problem with the price.

Contact Information

If you have any questions, comments or need technical assistance contact our customer service department by calling (800) 248-0892, Monday through Friday. For calls from outside the USA or Canada, our local number is (517) 322-2144.

For inquiries by mail, our address is PO Box 80167, Lansing, MI 48908-0167. Our shipping address for returns is 2727 Snow Road, Lansing, MI 48917.

You may also contact us anytime by e-mail at sales@airliftcompany.com or on the web at www.airliftcompany.com.

Electrical Schematic

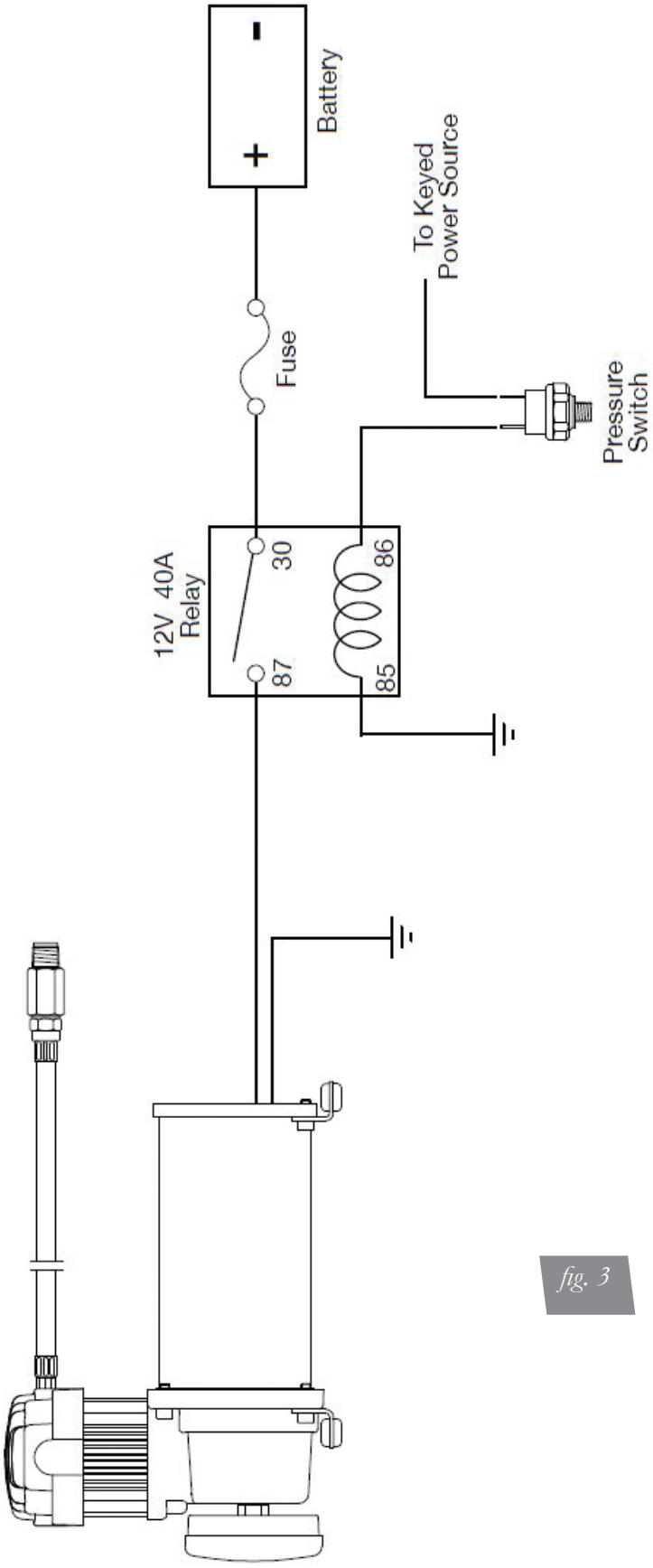

fig. 3

Paddle Switch Mounting Bracket Template

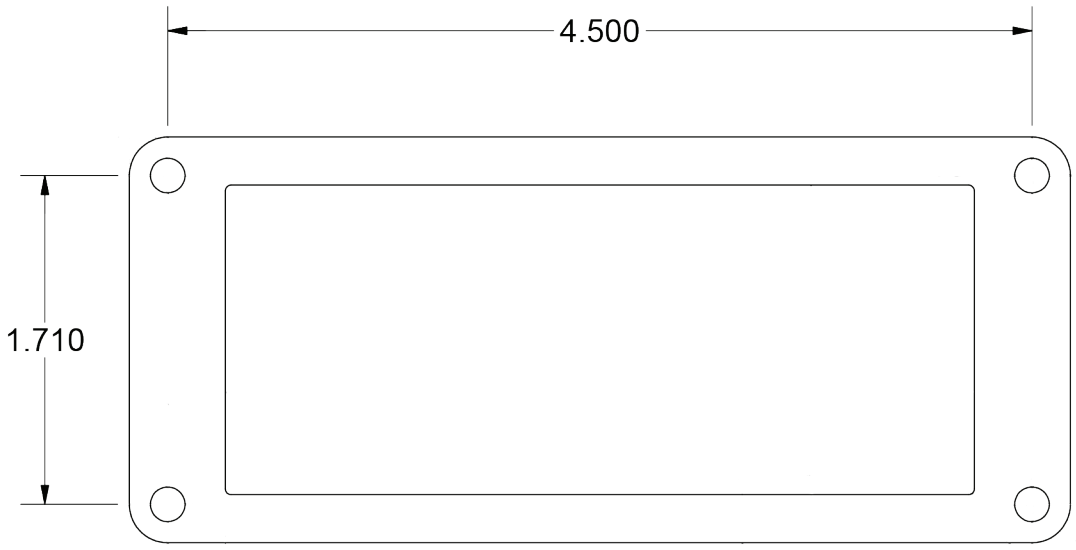

16380 Compressor Template

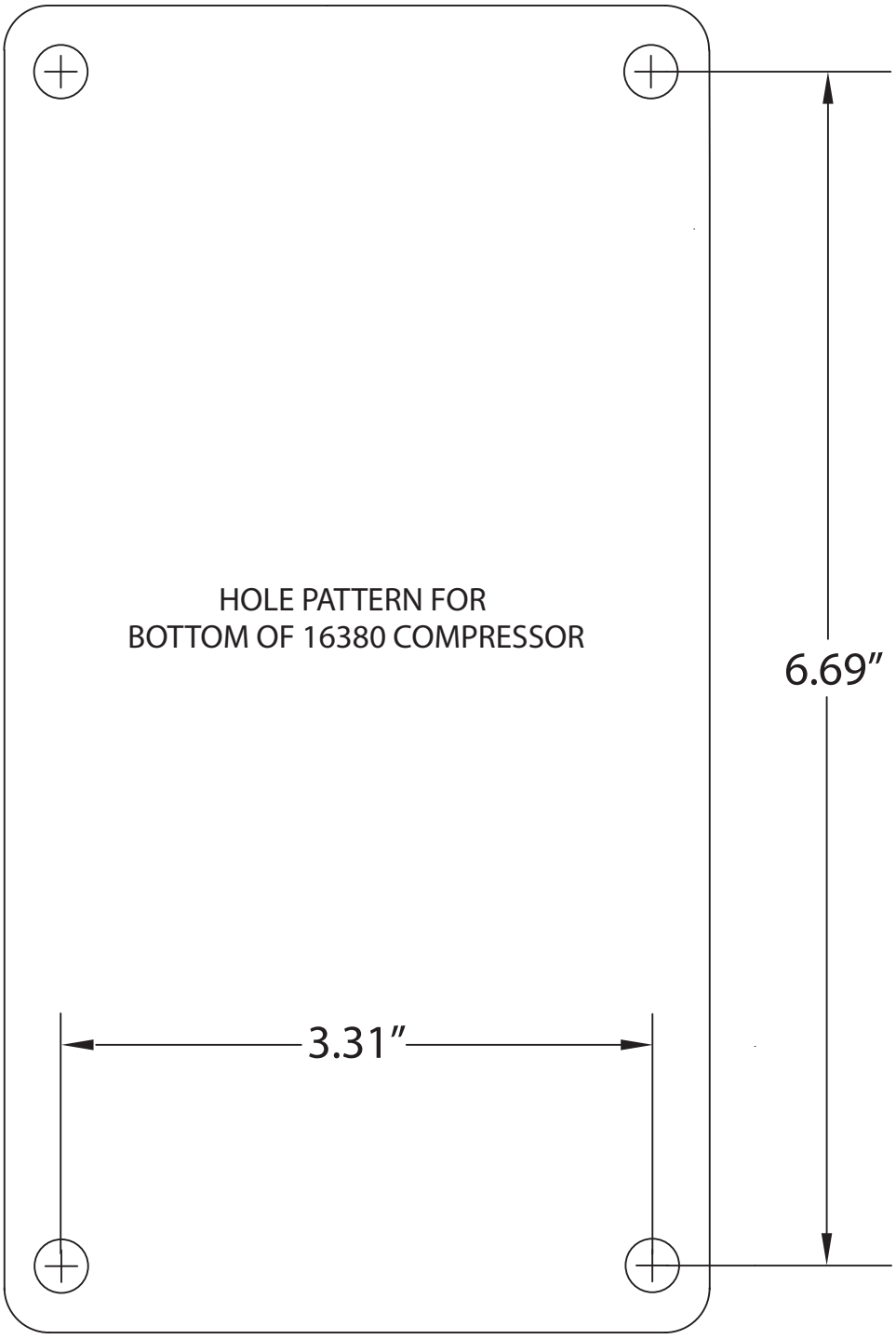

Need Help?

Contact our customer service department by calling (800) 248-0892, Monday through Friday. For calls from outside the USA or Canada, our local number is (517) 322-2144.

Thank you for purchasing Air Lift Performance products!

Air Lift Performance • 2727 Snow Road • Lansing, MI 48917 or PO Box 80167 • Lansing, MI 48908-0167
Toll Free (800) 248-0892 • Local (517) 322-2144 • Fax (517) 322-0240 • www.airliftperformance.com

Printed in
the USA