July 2005

FAN5331/5332 Evaluation Board User Manual

- 2.7 to 5.5V Input Range
- V_{IN} to 20V Output Range (FAN5331)
- V_{IN} to 30V Output Range (FAN5332)
- 1A Peak Switch Current (FAN5331)
- 1.5A Peak Switch Current (FAN5332)
- Low Noise
- Low Shutdown Current: <1uA
- 1.6 MHz Fixed-Frequency PWM Operation
- Over Voltage Protection, Shutdown Mode and Soft Start
- Small 5-lead SOT23 Package

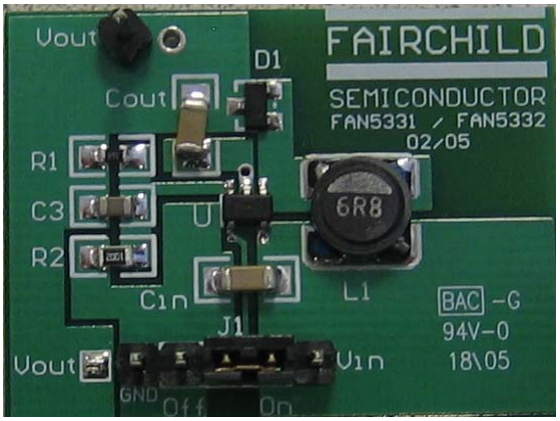

Figure 1: FAN5331SX/32ASX_NL

Description:

The **FAN5331 and FAN5332 Evaluation Boards** are compact circuits including the FAN5331 SX or FAN5332A SX_NL in an SOT23 package and two small capacitors which can provide regulated output voltage to the load. The inductor-Schottky diode combination and two typically valued resistors are also included to form a resistor divider to the feedback pin. A feed forward capacitor is provided for stability as well. The FAN5331 and FAN5332 demo boards, completely assembled and tested surface mount boards, provide easy probe access points to all inputs and outputs so that electrical characteristics and waveforms can be easily measured.

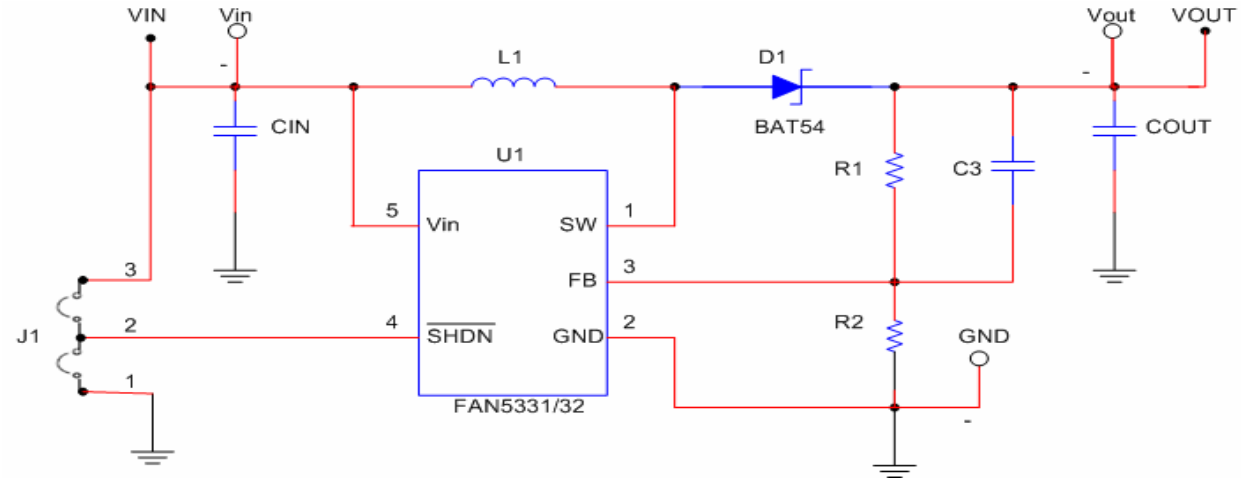

Figure 2: Schematic Diagram(*)

(*) **FAN5331:** R1 = 150K, R2 = 13.5K, L1 = 10uH, C_{IN} = 4.7uF, C_{OUT} = 4.7uF, C3 = 120pF
FAN5332: R1 = 160K, R2 = 10K, L1 = 6.8uH, C_{IN} = 10uF, C_{OUT} = 2.2uF, C3 = 82pF

©2005 Fairchild Semiconductor Corporation

Where To Begin:

1: Connect V_{IN} (2.7 to 5.5V) and Gnd (0V).

2: To verify supply current in "ON" and "OFF" modes, observe that in shutdown mode, supply current will drop to the current pulled by the resistor divider.
$I = V_{IN} / (R1 + R2)$.
(**Note:** Use Jumper J1 to connect V_{IN} directly to "ON" or Gnd to "OFF")

3: Observe that $V_{OUT} = V_{REF}\{1 + (R1/R2)\}$
(**Note:** For the FAN5331, R1 = 150K and R2 = 13.4K are chosen to set V_{OUT} to 15V where V_{REF} = 1.23V. For the FAN5332, R1 = 160K and R2 = 10K are chosen to set V_{OUT} to 21V where V_{REF} = 1.23V)

4: Verify that V_{OUT} is independent of V_{IN} when it decreases from 5.5V to 2.7V if the load current does not exceed its maximum value, a function of V_{IN}.
(**Note:** Although the load current is indirectly limited by the maximum inductor current, V_{OUT} is not allowed to be shorted to ground. Failure results in damaging the Schottky diode and/or the IC)
(**Note:** The Schottky diode D1, rectifies the voltage pulses generated by the inductor)

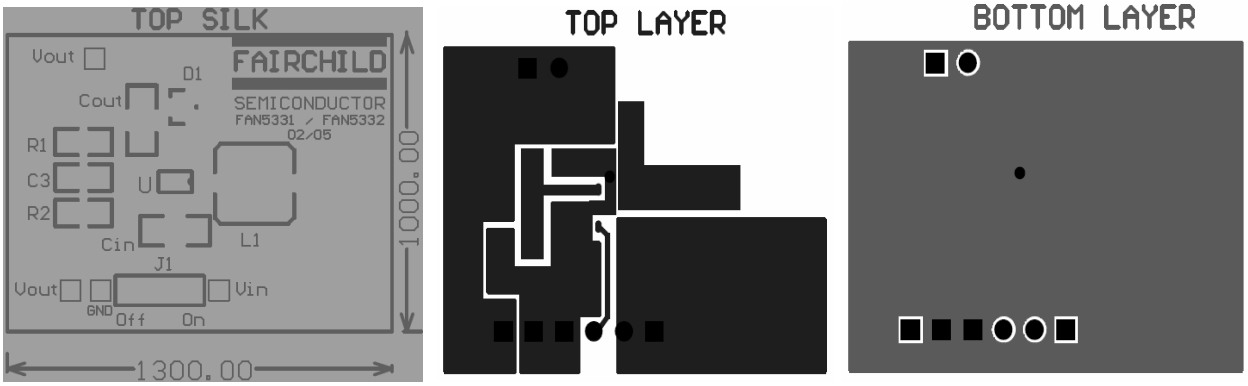

Figure 3: PCB Layout

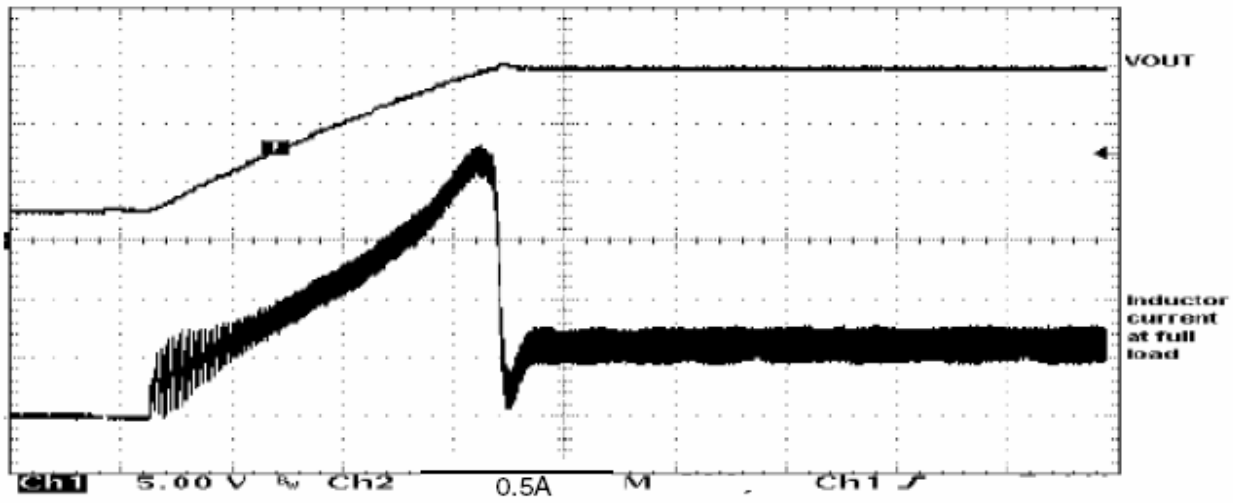

Figure 4: Start-Up Waveform

Table 1: FAN5331 List of Materials

Description	Qty	Ref.	Vendor	Part Number
Hardware Connector Header .1 SINGLE STR 36POS	7	GND, VOUT, VIN, ON/OFF	Digi-Key	S1011-36-ND
Inductor 10uH, 1.5A, low profile, 20%, SMD	1	L1	Panasonic Cooper	ELL6GM100M SD414-100
IC System Regulator, SOT23-5, FSID: FAN5331SX	1	U1	Fairchild	FAN5331SX
Capacitor 120pF, 10%, 50V, COG, 0805	1	C3	Any	
Resistor 13.4 Kohm, 1%, 0805		R2	Any	
Resistor 150 Kohm, 1%, 0805	1	R1	Any	
Capacitor 4.7uF, 10%, 1206	2	CIN/COUT	Panasonic	ECJ3YB1C475K
Diode Schottky, 30V, 0.2A , SOT-23, FSID: BAT54	1	D1	Fairchild	BAT54

Table 2: FAN5332 List of Materials

Description	Qty	Ref.	Vendor	Part Number
Hardware Connector Header .1 SINGLE STR 36POS	7	GND, VOUT, VIN, ON/OFF	Digi-Key	S1011-36-ND
Inductor 6.8uH, 1.6A, low profile, 20%, SMD	1	L1	Cooper TDK	SD414-628 SLF6028T-6R8M1R5
IC System Regulator, SOT23-5, FSID: FAN5332ASX_NL	1	U1	Fairchild	FAN5332ASX_NL
Capacitor 82pF, 10%, 50V, COG, 0805	1	C3	Any	
Resistor 10 Kohm, 1%, 0805		R2	Any	
Resistor 160 Kohm, 1%, 0805	1	R1	Any	
Capacitor 2.2uF, 10%, 1206	1	COUT	Any	
Capacitor 10uF, 10%, 1206	1	CIN	Any	
Diode Schottky, 30V, 0.2A, SOT-23, FSID: BAT54	1	D1	Fairchild	BAT54

Table 3: Ordering Information

Product Number	Package Type	Order Code
FAN5331	5-Lead SOT23	FAN5331SX
FAN5332	5-Lead SOT23	FAN5332ASX_NL

WARNING AND DISCLAIMER

Replace components on the Evaluation Board only with those parts shown on the parts list in the User's Guide. Contact an authorized Fairchild representative with any questions.

The Evaluation board is for demonstration purposes only and neither the Board nor this User's Guide constitute a sales contract or create any kind of warranty, whether express of implied, as to the applications or products involved. Fairchild warranties that its products will meet Fairchild's published specifications but does not guarantee that its products will work in any specific application. Fairchild reserves the right to makes changes without notice to any products described herein to improve reliability, function, or design. Either the applicable sales contract signed by Fairchild and Buyer, or if no contract exists Fairchild's Stand Terms and Conditions on the back of Fairchild invoices, govern the terms of sale of the products described herein.

LIFE SUPPORT POLICY

FAIRCHILD'S PRODUCTS ARE NOT AUTHORIZED FOR USE AS CRITICAL COMPONENTS IN LIFE SUPPORT DEVICES OR SYSTEMS WITHOUT THE EXPRESS WRITTEN APPROVAL OF FAIRCHILD SEMICONDUCTOR CORPORATION.
As used herein:

1. Life support devices or systems are devices or systems which, (a) are intended for surgical implant into the body, or (b) support or sustain life, or (c) whose failure to perform when properly used in accordance with instructions for use provided in the labeling, can be reasonably expected to result in significant injury to the user.

2. A critical component is any component of a life support device or system whose failure to perform can be reasonably expected to cause the failure of the life support device or system, or to affect its safety or effectiveness.

TRADEMARKS

The following are registered and unregistered trademarks Fairchild Semiconductor owns or is authorized to use and is not intended to be an exhaustive list of all such trademarks.

ACEx™	FAST®	IntelliMAX™	POP™	SPM™
ActiveArray™	FASTr™	ISOPLANAR™	Power247™	Stealth™
Bottomless™	FPS™	LittleFET™	PowerEdge™	SuperFET™
CoolFET™	FRFET™	MICROCOUPLER™	PowerSaver™	SuperSOT™-3
CROSSVOLT™	GlobalOptoisolator™	MicroFET™	PowerTrench®	SuperSOT™-6
DOME™	GTO™	MicroPak™	QFET®	SuperSOT™-8
EcoSPARK™	HiSeC™	MICROWIRE™	QS™	SyncFET™
E^2CMOS™	I^2C™	MSX™	QT Optoelectronics™	TinyLogic®
EnSigna™	*i-Lo*™	MSXPro™	Quiet Series™	TINYOPTO™
FACT™	ImpliedDisconnect™	OCX™	RapidConfigure™	TruTranslation™
FACT Quiet Series™		OCXPro™	RapidConnect™	UHC™
Across the board. Around the world.™		OPTOLOGIC®	µSerDes™	UltraFET®
The Power Franchise®		OPTOPLANAR™	SILENT SWITCHER®	UniFET™
Programmable Active Droop™		PACMAN™	SMART START™	VCX™

© 2005 Fairchild Semiconductor

Mouser Electronics

Authorized Distributor

Click to View Pricing, Inventory, Delivery & Lifecycle Information:

Fairchild Semiconductor:

FEB142