

ISK 110 VESA

ISK Series

USER'S MANUAL

TABLE OF CONTENTS

INTRODUCTION
1.1 Case Specifications....3
1.2 Diagram....3
1.3 Power Supply Specifications....4

HARDWARE INSTALLATION GUIDE
2.1 Removing the Left Panel....5
2.2 Motherboard Installation....5
2.3 Internal 2.5" Device Installation....6

CONNECTING THE FRONT I/O PORTS
3.1 USB 2.0 Ports....7
3.2 AC'97 / HD Audio Ports....7
3.3 Switch and LED Connectors....8
3.4 Rewiring Motherboard Header Connections....8

MOUNTING THE ISK 110 VESA
4.1 VESA mounting system....9
4.2 Stand mounting....9

ISK 110 VESA USER'S MANUAL

At Antec, we continually refine and improve our products to ensure the highest quality. It's possible that your new case will differ slightly from the descriptions in this manual. This isn't a problem; it's simply an improvement. As of the date of publication, all features, descriptions, and illustrations in this manual are correct.

Disclaimer
This manual is intended only as a guide for Antec's computer enclosures. For more comprehensive instructions on installing the motherboard and peripherals, please refer to the user's manuals that come with those components.

Although care has been taken to prevent sharp edges in your Antec case, we strongly recommend taking the appropriate time and care when working with it. Avoid hurried or careless motions. Please use reasonable precaution.

This manual is not designed to cover CPU, RAM, or expansion card installation. Please consult the motherboard manual for specific mounting instructions and troubleshooting. Before proceeding, check the manual for your CPU cooler to find out if there are steps you must take before installing the motherboard. While installing hardware, keep your case on a flat, stable surface.

1.1 CASE SPECIFICATIONS

Case Type	Mini-ITX Desktop
Color	Black
Dimensions	8.7” (H) x 3.1” (W) x 8.4” (D) 222 mm (H) x 78 mm (W) x 212 mm (D)
Net Weight	2.9 lbs / 1.3 kg
Drive Bays	2 x 2.5” internal drive bays
Motherboard Size	Mini-ITX
Front I/O Panel	4 x USB 2.0 AC’97 / HD Audio In and Out
Power Supply	90-watt adapter

1.2 DIAGRAM

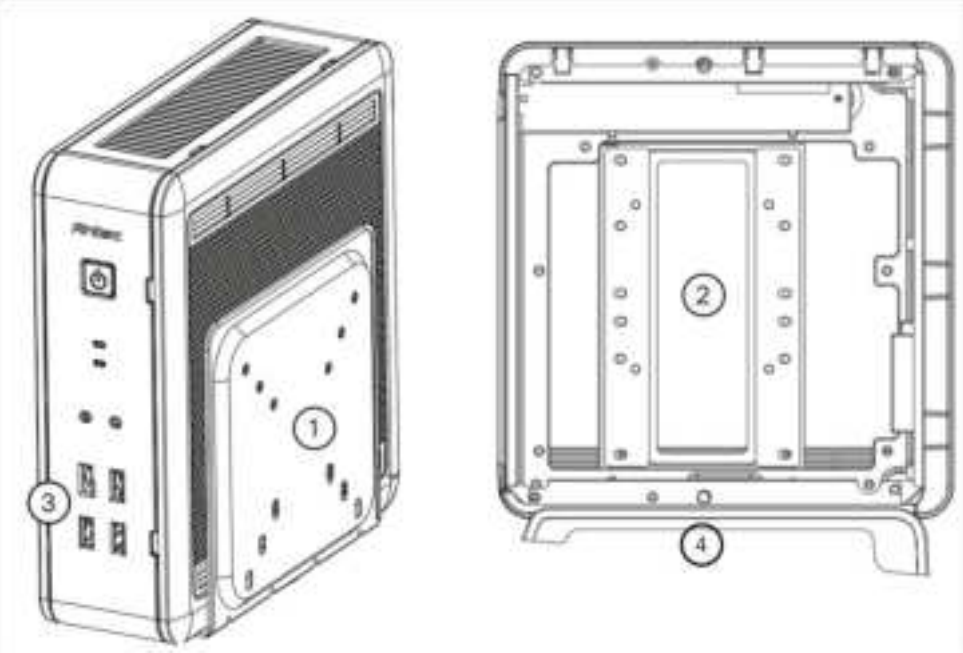

1. VESA mount (included)
2. 2 x 2.5” internal drive bays
3. Front I/O panel
4. Case Stand (included)

1.3 POWER SUPPLY SPECIFICATIONS

The ISK 110 VESA is powered by a 90-watt power adapter.

Input characteristics:

Rated Voltage	Input Voltage Range	Frequency Range
100VAC – 240VAC	90 VAC – 264 VAC	47 Hz – 63 Hz

Output characteristics:

Rated Power	Rated Voltage	Voltage Range	Output Current
90W	19V	18.4V ~ 20.0V	0A ~ 4.7A

The adapter is rated at least 85% efficient at 100 VAC and 240 VAC input voltage and maximum load.

A variety of industrial-grade safety circuitry will help protect your computer: Over Voltage Protection (OVP), Short Circuit Protection (SCP), Over Current Protection (OCP) and Over Temperature Protection (OTP).

There are no user-replaceable fuses in the adapter.

HARDWARE INSTALLATION GUIDE

2.1 REMOVING THE LEFT PANEL

Lay the case on its right side, with the I/O panel facing you.
You will be removing the left panel (the one with the fan)

1. Remove the two screws from the rear of the panel.
2. Using your thumbs, push up on the rear of the panel until the entire panel pops free from the rest of the chassis.

   Note: Do not use your fingernails to pry or lift the panels.



Remove these case screws



Pop the panel free

2.2 MOTHERBOARD INSTALLATION

1. Lay the case down, with the open side facing up.
2. Make sure you have the correct I/O panel for your motherboard. If the panel provided with the case isn't suitable, please contact your motherboard manufacturer for the correct I/O panel. Install the I/O panel at the rear of the case.
3. Align your motherboard with the motherboard standoff holes located at the rear of the case.
4. Screw in your motherboard to the standoffs with the provided Phillips-head screws.
5. Attach the 24-pin connector of the included cable bundle to the motherboard and connect the 18-pin connector to the already installed PCB in the case.
6. Your motherboard is now installed. Refer to section 3.1 for instructions on how to connect the I/O panel cables.



Motherboard screw locations

2.3 INTERNAL 2.5" DEVICE INSTALLATION

Note: It is important that you install the insulating sheets in step 3 to ensure that the hard drive(s) and bracket do not come into contact.

2.5" hard drives can be mounted to a bracket underneath the motherboard. To access this bracket, you will need to remove the right side panel. If you have just installed the motherboard, it can be helpful to replace the left side panel before continuing.

1. Lay the case down on its left side, and remove the right panel as described in section 2.1.
2. Remove the four screws securing the bracket to the case (see picture).



3. Attach the red insulating strips by removing the adhesive covering and attaching them as shown in the picture.



4. Align your drive(s) such that all four screw holes in the drive will be utilized.
5. Secure your hard drive(s) to the bracket using the supplied black screws. Fasten screws to the bottom of the hard drive. The top of the hard drive will face the motherboard and the back of the hard drive will face the front of the case (see picture).
6. Place the insulating sheet on the exposed part of the motherboard in the case.
7. Reattach the HDD tray to the case, and replace the four screws.
8. Connect the data and power connectors from the motherboard and power supply to the device by pulling the connections through the opening left between the motherboard and the case (see picture).





Route HDD cables through this gap

CONNECTING THE FRONT I/O PORTS

3.1 USB 2.0

Connect the front I/O panel USB cables to the USB header pins on your motherboard. Check the motherboard manual to ensure that it matches the table below:

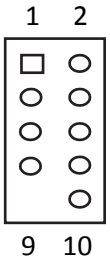

Pin	Signal Names	Pin	Signal Names
1	USB Power 1	2	USB Power 2
3	Negative Signal 1	4	Negative Signal 2
5	Positive Signal 1	6	Positive Signal 2
7	Ground 1	8	Ground 2
9	Key (No Connection)	10	Empty Pin

3.2 HD AUDIO PORTS

There is an Intel® 10-pin HDA (High Definition Audio) connector linked to the front panel of the case.

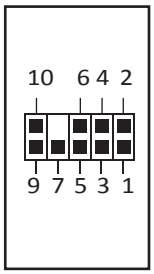

Pin	Signal Names (HDA)
1	MIC2 L
2	AGND
3	MIC2 R
4	AVCC
5	FRO-R
6	MIC2_JD
7	F_IO_SEN
8	Key (no pin)
9	FRO-L
10	LINE2_JD

Locate the internal audio connectors from your motherboard or sound card and connect the corresponding audio cable. Consult your motherboard or sound card manual for the pin-out positions.

3.3 Power Switch / Hard Disk Drive LED Connectors



Connected to your front panel are LED and switch leads for power and HDD LED activity. Attach these to the corresponding connectors on your motherboard. Consult your motherboard user's manual for specific pin header locations. For LEDs, colored wires are positive (+). White or black wires are negative (–). If the LED does not light up when the system is powered on, try reversing the connection. For more information on connecting LEDs to your motherboard, see your motherboard user's manual.

Note: Polarity (positive and negative) does not matter for switches.

3.4 Rewiring Motherboard Header Connections

There may come a time when you need to reconfigure the pin-out of a motherboard header connector. Examples could be for your USB header, audio input header, or some other front panel connector such as the Power Button connector.

Before performing any work, please refer to your motherboard user's manual or your motherboard manufacturer's website to be sure of the pin-out needed for your connector. We strongly recommend making a notated drawing before beginning work so that you can recover if your work gets disturbed.



1. Determine which wires you need to remove in order to rewire your plug to match the USB pin-outs on your motherboard (refer to your motherboard user's manual). Working on one connector at a time, use a very small flathead screwdriver or similar tool to lift up on the black tab located beside the gold posts (squares). This will allow you to easily slide out the pins from the USB plug.
2. Working carefully so as not to damage the wires, connectors, or pins, slowly remove the pin from the connector. Repeat these steps for each wire you need to change.
3. Working carefully so as not to damage the wires, connectors or pins, slowly reinsert the pin into the correct slot of the connector then snap closed the black tab that was lifted in step 1. Repeat these steps for each wire you need to change.

MOUNTING YOUR ISK 110 VESA

4.1 VESA MOUNTING SYSTEM

Your ISK 110 VESA comes with a VESA mounting system that will allow you to attach the case to a VESA compatible mount.

1. Secure the included VESA mount to your LCD monitor with the screws provided before attaching the case.
2. Attach the case to the mount by moving the case onto the hook, then slide the case onto the hook to lock it into position.
3. (optional) Install up to 3 screws into the bottom of the assembly for added stability.



Attach the mount with the four included screws



Installed VESA mount

4.1 STAND MOUNTING

Your ISK 110 VESA also comes with a stand so the unit can be installed without use of the VESA mount if needed.

1. Invert the case so that the bottom of the mounting system is facing up.
2. Align the stand with the base of the case such that the long foot is aligned with the front of the unit.
3. Insert both feet into the proper holes in the case, and then slide the stand forward until it locks into place.
4. (optional) Install 1 screw into the bottom of the assembly for added stability.

Antec, Inc.
47900 Fremont Blvd.
Fremont, CA 94538
USA
tel: 510-770-1200
fax: 510-770-1288

Antec Europe B.V.
Stuttgartstraat 12
3047 AS Rotterdam
Netherlands
tel: +31 (0) 10 462-2060
fax: +31 (0) 10 437-1752

Customer Support: US & Canada
1-800-22ANTEC
customersupport@antec.com

Europe
+31 (0) 10 462-2060
europe.techsupport@antec.com

www.antec.com

© Copyright 2012 Antec, Inc. All rights reserved.
All trademarks are the property of their respective owners. Reproduction in whole or in part without written permission is prohibited.