Part No.514002120002
Rev: B
Apr 2022

Parts Manual

TB20EJ Plus/TB660EJ Plus

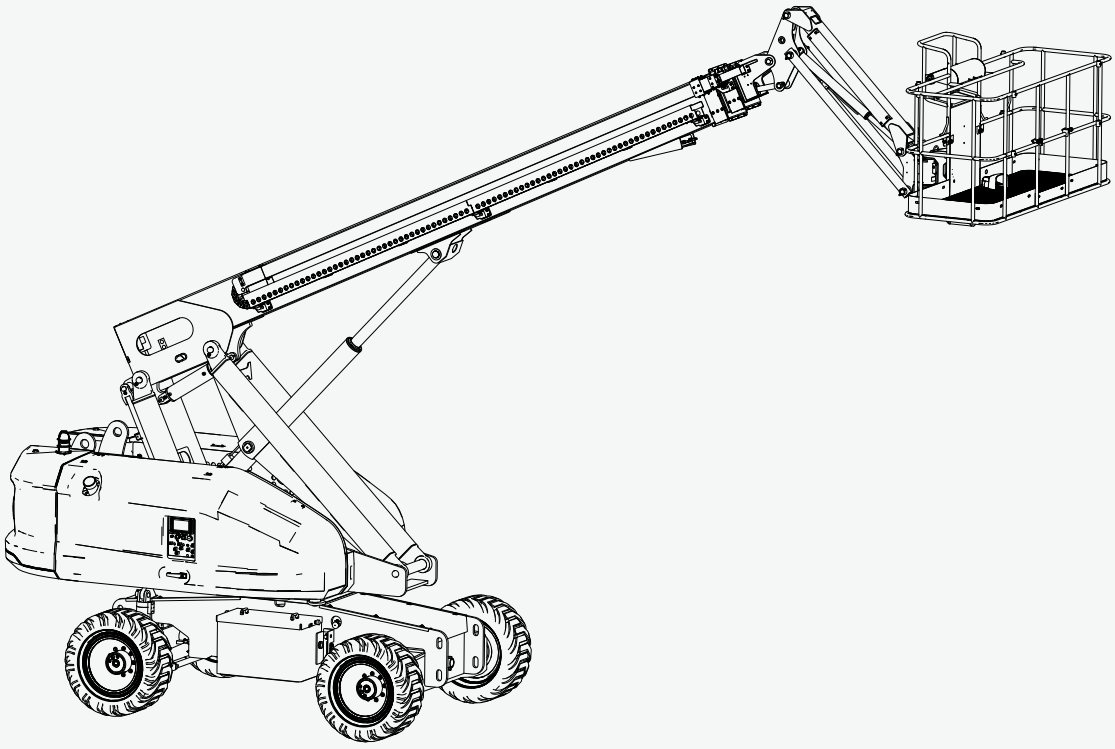

SINOBOOM

⚠ WARNING

Operating, servicing and maintaining this vehicle or equipment can expose you to chemicals including engine exhaust, carbon monoxide, phthalates, and lead, which are known to the State of California to cause cancer and birth defects or other reproductive harm. To minimize exposure, avoid breathing exhaust, do not idle the engine except as necessary, service your vehicle or equipment in a well-ventilated area and wear gloves or wash your hands frequently when servicing. For more information go to: www.P65warnings.ca.gov.
For disposal, please follow your nation regulation.

Manual revision history：

REV	DATE	DESCRIPTION	REMARK
A	Oct, 2021	Original issue of the manual	
B	Apr,2022	Adding three-door platform section	

Please contact us:

Website : www.sinoboom.com

E-mail : sales@sinoboom.com

Sales Tel : 0086-0731-87116222

Service Tel : 0086-0731–87116333

Address : No.128, East Jinzhou Avenue, Ningxiang High-tech Industrial Park, Changsha, Hunan, China

Zip Code : 410600

Copyright © Hunan Sinoboom Intelligent Equipment Co., Ltd. All Rights Reserved

The final interpretation right of this manual belongs to Hunan Sinoboom Intelligent Equipment Co., Ltd.

APPLICATION

Use the following table to identify the specific serial number for models included in this manual. Check the model of your machine before consulting the manual, and then use the correct manual according to the serial number of the model. See the nameplate on your machine to identify the model and serial number. (See of the *Operation Manual* for details.)

Model	Trade Identification		Serial No.
	Metric	Imperial	
TB20EJ Plus	TB20EJ Plus	TB660EJ Plus	From 1400200118 to present

NOTE:

- Product model is applied in product nameplate for distinction of products of different main parameters.
- Product trade identification is applied in marketing and machine decals for distinction of products of different main parameters, and can be classified as metric type and imperial type: The metric type of trade identification is applicable to machines for countries/regions using metric system or as specially required by customers; The imperial type of trade identification is applicable to the machines for countries/regions using imperial system or as specially required by customers.

STATEMENTS

Hunan Sinoboom Intelligent Equipment Co., Ltd. (Hereinafter referred to as Sinoboom) will upload the latest product manual information to the website www. sinoboom. com as soon as possible. However, due to continuous product improvement, the information in this manual is subject to change without prior notice.

This manual covers the basic parts information of one or more products. Therefore, please use this manual according to your needs. If you find problems in the manual or have suggestions for improvement, feel free to share your feedback with Sinoboom, and we will address these issues as soon as possible.

Feel free to consult and download the *Operation Manual*, *Maintenance Manual* and *Parts Manual* of the products you need online at www.sinoboom.com.

Hunan Sinoboom Intelligent Equipment Co., Ltd. retains the right of final interpretation of the manual.

SINOBOOM

All of the above are registered trademarks of Hunan Sinoboom Intelligent Equipment Co., Ltd..

GENERAL INFORMATION

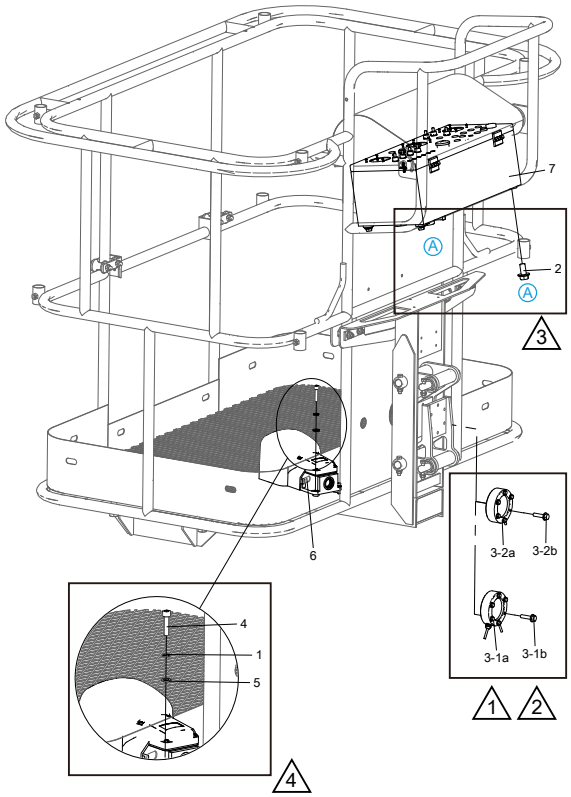

No.	Part No.	Qty.	Description
1	215040000004	3	Washer 6-A2-70 GB/T 93
2	215010000237	4	Bolt M10×20-8.8-ZnD GB/T 5789
3	103006060034		Options, Load sensor
3-1	103006060026	1	Load sensor installation
3-1a	203150000070	1	Load sensor
3-1b	215010000232	6	Bolt M6×25-8.8-ZnD GB/T 5789
3-2	103006060029	1	Load sensor installation
3-2a	203150000069	1	Load sensor
3-2b	215010000232	6	Bolt M6×25-8.8-ZnD GB/T 5789
4	215020000013	3	Screw M6×25-A2-70 GB/T 70.1
5	215040000033	3	Washer 6-A2 GB/T 97.1
6	203060000009	1	Footswitch
6	105002040001	1	Platform control box assembly

1 2

The special meanings expressed in the illustrations and tables in this manual are explained as follows :

1 Add "-1, -2, -3…" after the number to represents an options (one multiple choice), such as choose 3-1 and 3-2 according to specific needs.

2 Add "lowercase a, b, c…" after the number to indicate by a variety of components, such as 1a and 1b composition 1.

3 "A,B,C..." in figure indicates the same parts in many places, and the same place is indicated by the same symbol.

4 The diagram indicated by the lead is a local enlargement or a local illustration.

TABLE OF CONTENTS

1 Chassis Components 3

1.1 Drive Installation 4
1.2 Drive Reducer (PN.204020000043) 6
1.3 Drive motor(PN.203010003023) 7
1.4 Outrigger Installation 8
1.5 Steer Installation 9
1.6 Steer Linkage 11
1.7 Oscillate Cylinder Installation 12
1.8 Battery Holder Installation 14
1.9 Chassis Shield Installation 16

2 Turntable Components 17

2.1 Swing Drive Installation 18
2.2 Slewing Reducr (PN.204020000002) 20
2.3 Turntable Left Hoods Installation 21
2.4 Turntable Right Hoods Installation 24
2.5 Counterweight Installation 26
2.6 Electric Power System 27
2.7 Turntable Shield Installation 29

3 Boom Components 31

3.1 Boom Link Assembly 32
3.2 Base Boom Installation 35
3.3 Telescopic Boom 1 Installation 37
3.4 Telescopic Boom 2 Installation 39
3.5 Cable Track Installation 41
3.6 Telescopic Mechanism 44
3.7 Head Sheave Assembly 46
3.8 Jib Boom Installation-TB20J Plus&20EJ Plus&20HJ Plus 47

4 Platform Components 49

4.1 Platform Components(Small-sized) 50
4.1.1 Platform Support Installation(Small-sized) 51

4.1.2 Platform Installation(Small-sized) 53
4.2 Platform Components(Middle-sized) 55
4.2.1 Platform Support Installation(Middle-sized) 56
4.2.2 Platform Installation(Middle-sized) 58
4.3 Platform Components(Big-sized) 60
4.3.1 Platform Support Installation(Big-sized) 61
4.3.2 Platform Installation(Big-sized) 63

5 Hydraulic System 65

5.1 Chassis Hydraulic Components Installation 66
5.2 Chassis Hose Support and Cylinder Jacket Installation 68
5.3 Oscillate Counterbalance Valve(PN.202040003032) 69
5.4 Oscillate Multi-way Valve(PN.202040003026) 70
5.5 Turntable Hydraulic Components Installation 71
5.6 Hydraulic Tank Assembly(PN.105025023414) 73
5.7 Cycloid Motor(PN.202020000005) 75
5.8 Boom Function Manifold (PN.202040003176) 76
5.9 Rotary Cushion Valve(PN.202040003061) 78
5.10 Boom Manifold Installation 79
5.11 Boom Hose Clamps and Cylinder Jackets Installation 81
5.12 Telescoping Counterbalance Valve(PN.202040003126) 83
5.13 Platform Duplex Valve(PN.202040000329) 84
5.14 Lifting Control Valve(PN.202040003227) 85
5.15 Leveling Counterbalance Valve(PN.202040000011) 86
5.16 Turntable Tubes Layout 87
5.17 Oscillate Piping Layout 90
5.18 Boom Tubes Layout-TB20J Plus&20EJ Plus&20HJ Plus 92
5.19 Hydraulic Schematic 94

6 Electrical System 95

6.1 Chassis Electrical Components Installation 96
6.2 Lead Acid Batteries Installation 98
6.3 Lithium Batteries Installation 99
6.4 Power Cable Kit(PN.114002063023) 100
6.5 Turntable Electrical Components Installation 101
6.6 Ground Controller Assembly (PN.114004063029) 103
6.7 Ground controller wiring diagram(PN.114004063032) 105

6.8 Turntable Harness(PN.114002063042) 107
6.9 Turntable Sensors Harness(PN.114002063009) 110
6.10 Boom Electrical Components Installation 112
6.11 Cable Track Diagram(PN.114002063018) 114
6.12 Platform Electrical Components Installation 115
6.13 Platform Control Box Assembly (PN.114002063015) 117
6.14 Platform Control Box Harness(PN.114001063001) 120
6.15 Platform Harness(PN.105050063001) 123
6.16 Platform Harness(PN.103006063009) 125
6.17 Platform Sensors Harness(PN.105031060013) 126
6.18 Electrical Schematic 127

7 Decals 129

7.1 Decals(GB) 130
7.2 Decals(GB) 133
7.3 Decals(CE-Metric) 136
7.4 Decals(CE-Imperial) 139
7.5 Decals(CSA) 142
7.6 Decals(ANSI) 145

8 Special Options 149

8.1 GPS Installation 150
8.2 Overhead Protection Installation 151
8.3 Manual Storage Container Installation 152
8.4 Work Light Installation 153
8.5 Civil AC Power Installation 154
8.6 Anti-pinch device installation 156
8.7 Anti-pinch Harness(PN.105078063081) 158
8.8 Electrical diagram of anti-pinch device 160

INTRODUCTION

Thank you for choosing and using the machinery of Hunan Sinoboom Intelligent Equipment Co., Ltd. Always read, understand and become familiar with the operation requirements of the machine and its associated safety procedures before operating, maintaining and repairing the machine. Operating the machine without becoming familiar with its specific operation requirements and safety procedures poses serious risks. Operators who follow safety rules and operate the machine carefully and effectively will prevent personal injury, property loss and accidents.

The information contained in this manual is designed to aid the user in locating and identifying replacement parts. Component parts of various assemblies and sub-assemblies are illustrated and accompanied by a descriptive parts list. Exploded drawings are used to show relative location of component parts in disassembly or assembly order.

This product uses the latest technology and the highest quality components. When replacement parts are required, Hunan Sinoboom Intelligent Equipment Co., Ltd. recommends that only the original or recommended parts be used. When ordering replacement parts, the complete part number and description should be used to ensure proper identification and delivery of the desired item. This complete identification should also be used when requesting equipment information.

Consider this manual a part of the machine, along with *Operation Manual* and *Maintenance Manual*, and always keep the manuals with the machine. The owner or administrator of the machine shall offer all manuals and other necessary information provided by the machine manufacturer regarding the daily inspection and maintenance to each of the renters. If the machine is sold, the owner or administrator must pass along the manuals and other necessary information to the purchaser. The owner or administrator of the machine shall also provide the manufacturer’s maintenance information to the person responsible for maintaining the machine.

If you have any questions, contact Hunan Sinoboom Intelligent Equipment Co., Ltd..

This Page Intentionally Left Blank

1 CHASSIS COMPONENTS

1.1 DRIVE INSTALLATION

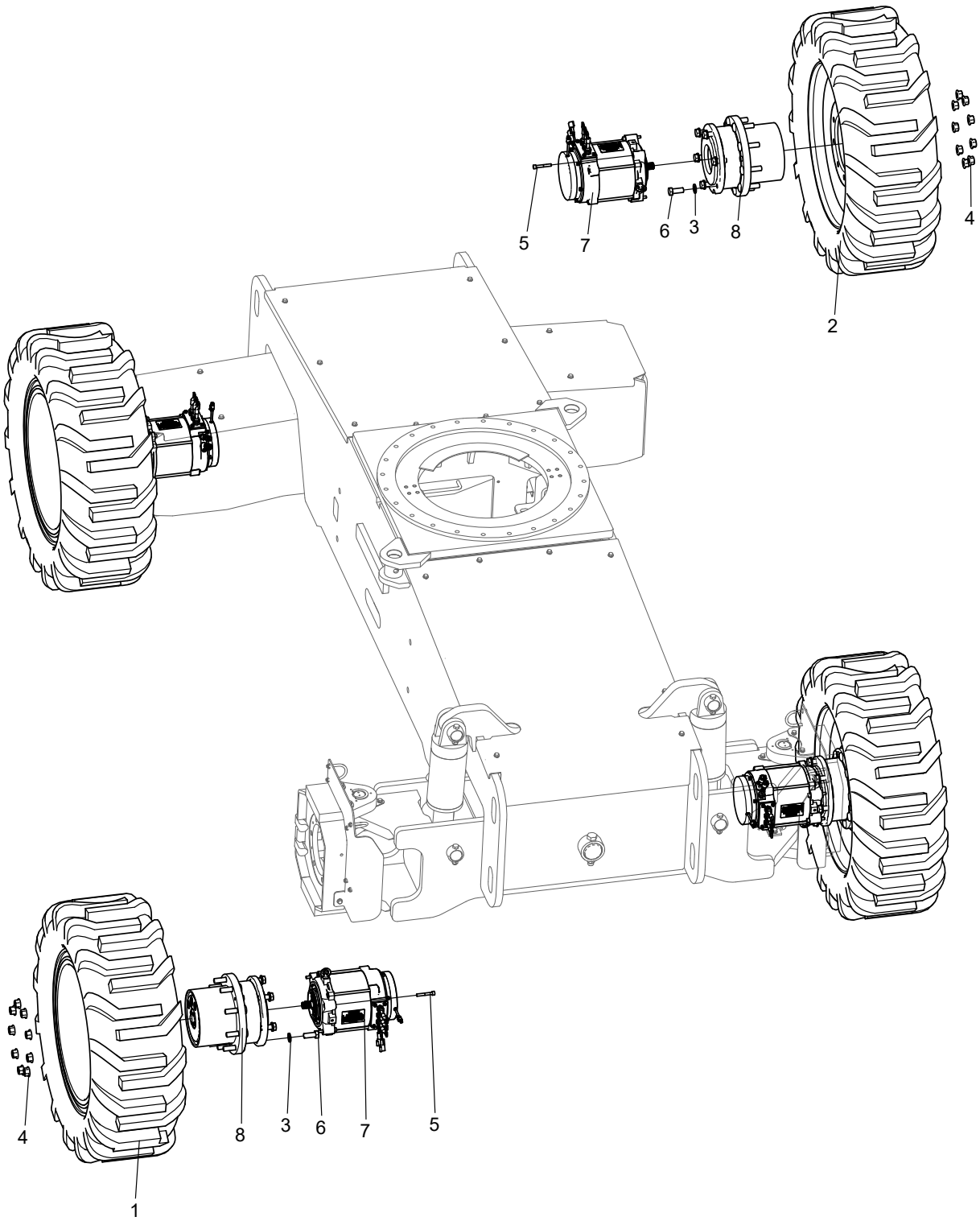

No.	Part No.	Qty.	Description
1	103008030007	2	Right tire options
1-1	103008030003	2	Right tire assembly, non-marking(36*14-20/7.50V-20(non-marking))
1-2	103008030001	2	Tire assembly, right(36*14-20/7.50V-20)
1-3	103008030008	2	Tire assembly, foam-filled, right (355/55D625)
1-4	103008033049	2	Right tire and wheel assembly, non-marking, foam filled(355/55D625)
2	103008030006	2	Left tire options
2-1	103008030004	2	Left non-marking tire assembly(36*14-20/7.50V-20(non-marking))
2-2	103008030002	2	Tire assembly, left(36*14-20/7.50V-20)
2-3	103008030037	2	Tire assembly, foam-filled, left(355/55D625)
2-4	103008033050	2	Left tire and wheel assembly, non-marking, foam filled(355/55D625)
3	215040000039	24	Washer 16-200HV-ZnD GB/T 97.1
4	215030000105	36	Nut M16-10-DKL GB/T 6177.1
5	215020000036	16	Screw M8×55-10.9-DKLGB/T 70.1
6	215010000111	24	Bolt M16×40-10.9-DKL GB/T 5783
7	203010003023	4	Drive motor
8	204020000043	4	Drive reducer

1.2 DRIVE REDUCER (PN.204020000043)

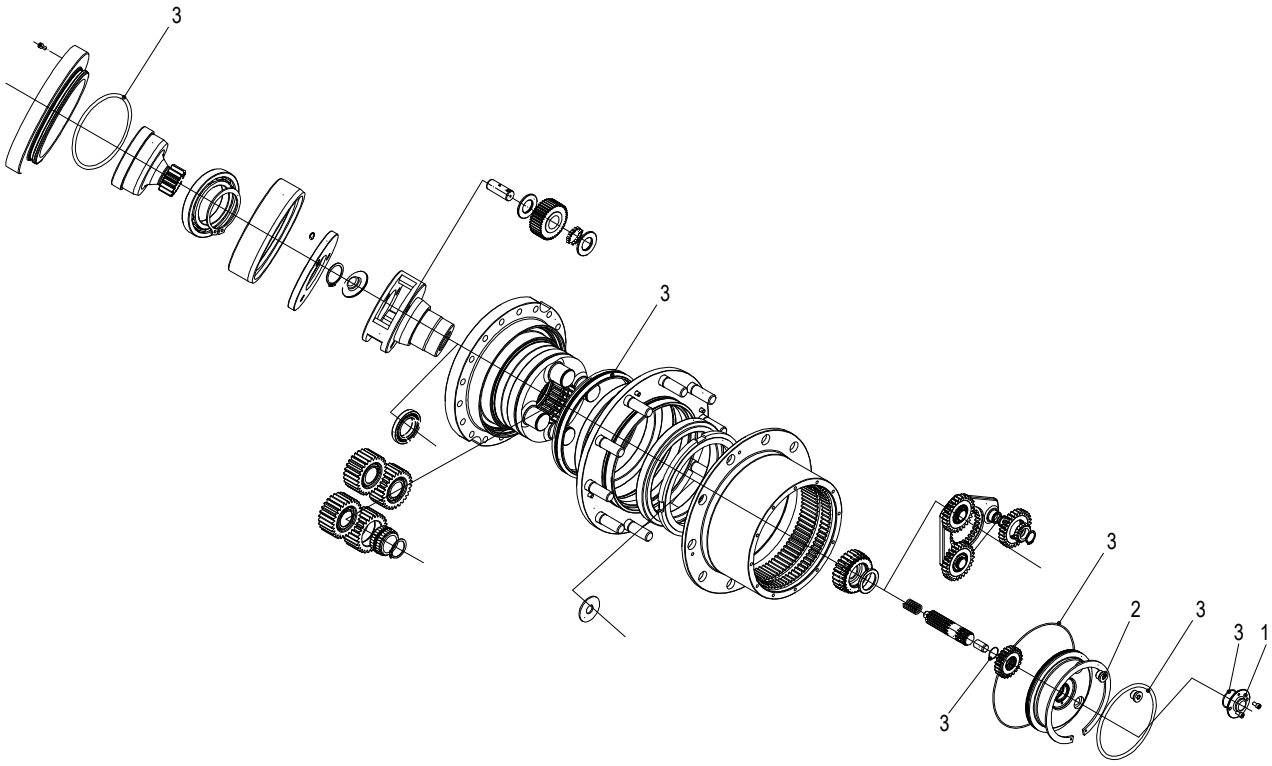

No.	Part No.	Qty.	Description
1	201990003020	1	End cap, small
2	207080003000	2	Oil plug
3	207060003004	1	Seal kit, Drive reducer

1.3 DRIVE MOTOR(PN.203010003023)

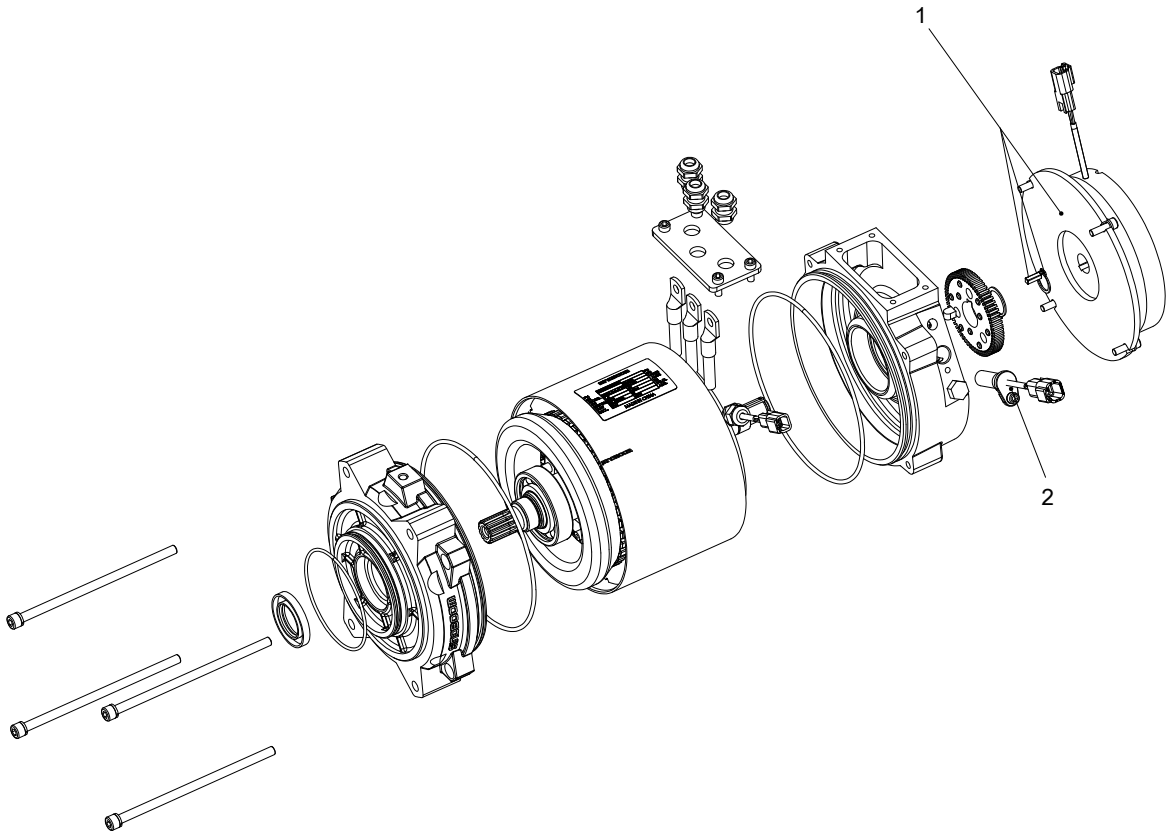

No.	Part No.	Qty.	Description
1	203150003046	1	Brake
2	203150003045	1	Speed sensor

1.4 OUTRIGGER INSTALLATION

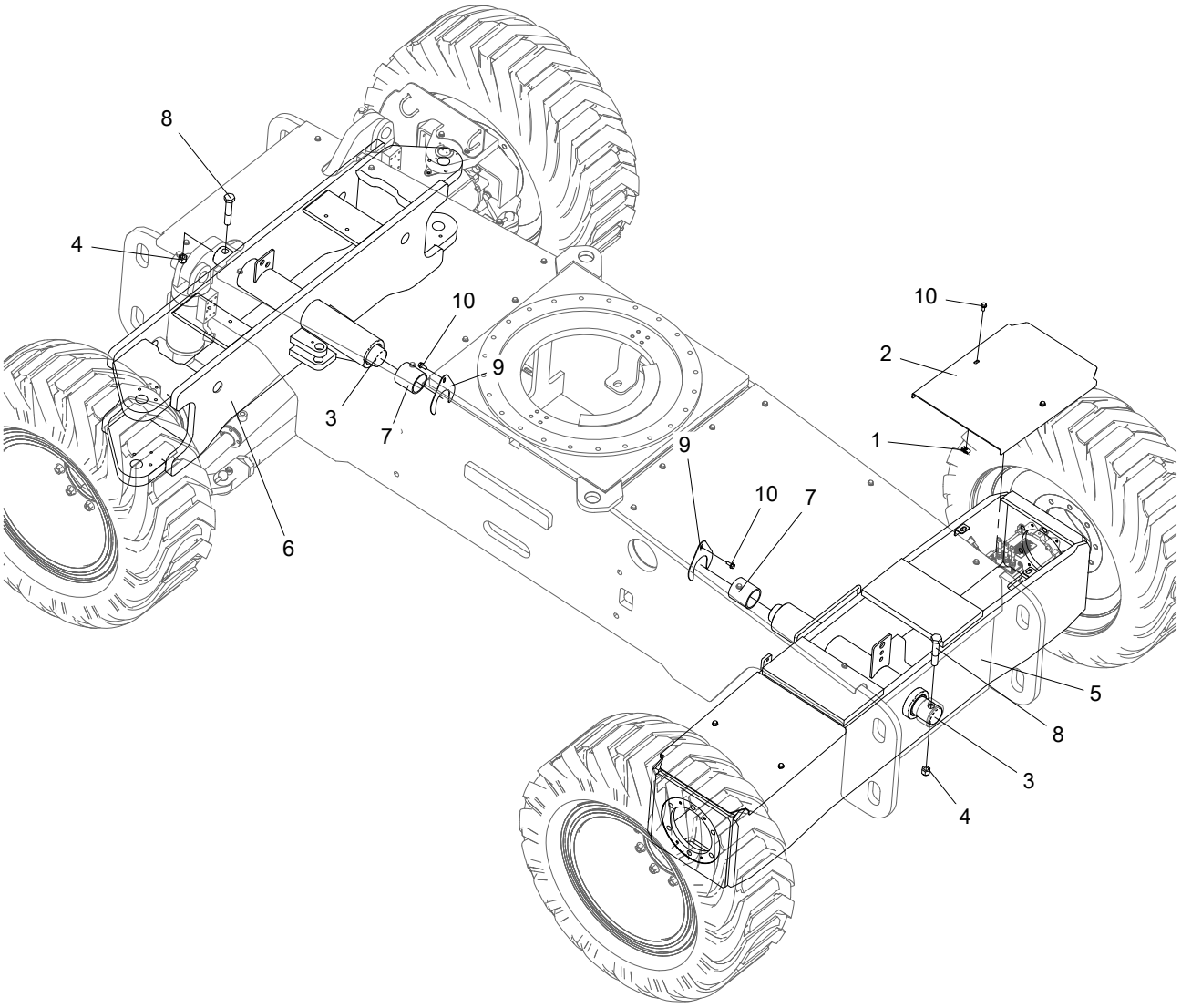

No.	Part No.	Qty.	Description
1	215030000106	4	B type spring nuts
2	103008030032	2	Cover, small
3	105001030043	2	Pin XGΦ65-695
4	215030000098	2	Nut M20-8-ZnD GB/T 6184
5	105051030002	1	Rear outrigger
6	103008030044	1	Front stationary outrigger assembly
7	214030000071	4	Bearing, self-lubricating
8	215010000219	2	Bolt M20×110-8.8-ZnD GB/T 5782
9	114004033006	2	Shim
10	215010000234	6	Bolt M8×20-8.8-ZnD GB/T 5789

1.5 STEER INSTALLATION

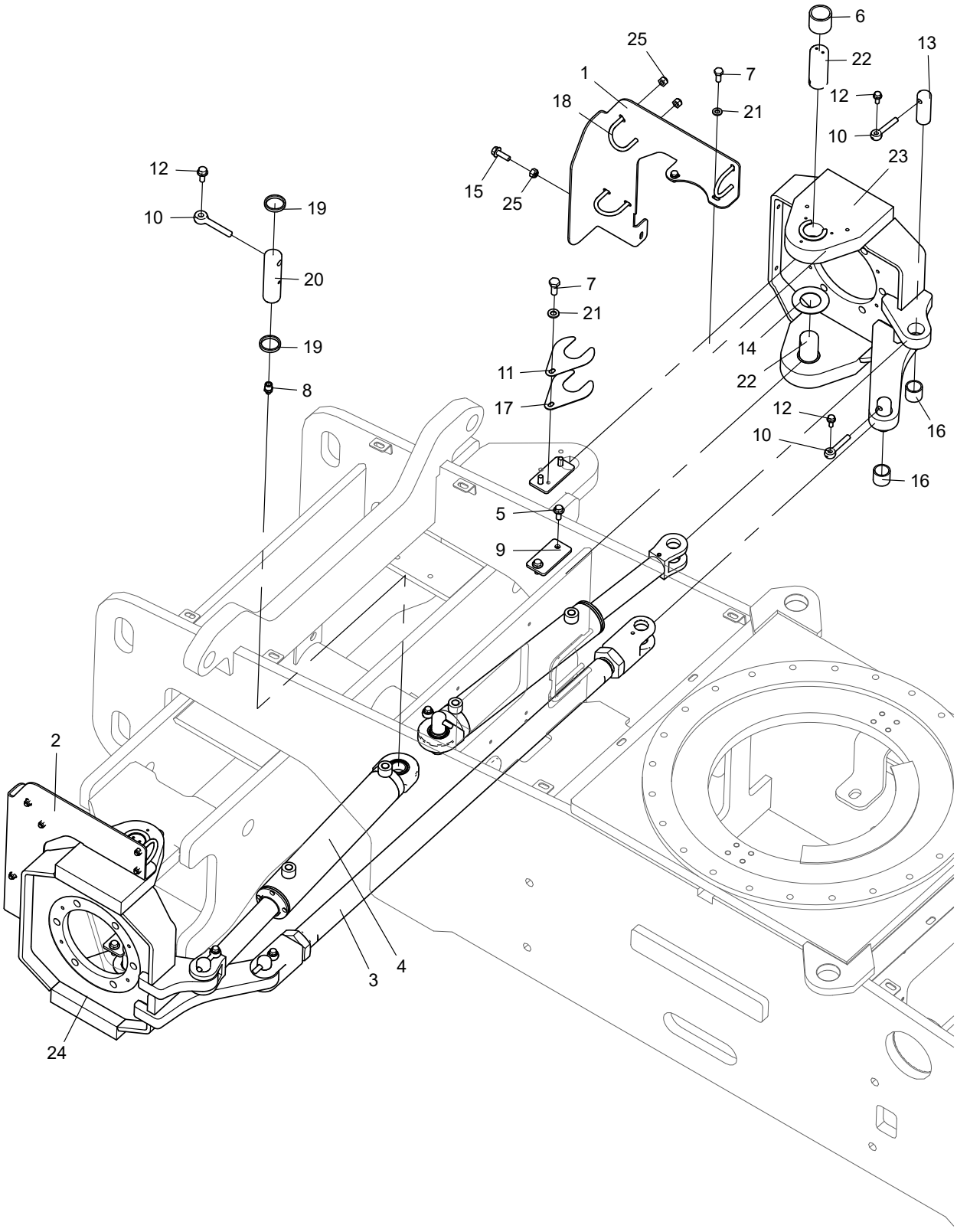

No.	Part No.	Qty.	Description
1	103008033012	1	Plate, bending
2	103008033013	1	Plate, bending
3	103008030072	1	Steer linkage(See STEER LINKAGE)
4	103008030070	2	Steer cylinder(A)
4a	207990003013	1	Seal kit, steer cylinder
5	215010000238	8	Bolt M10×25-8.8-ZnD GB/T 5789
6	214030000053	4	Bearing, self-lubricating
7	215010000057	6	Bolt M8×20-8.8-ZnD GB/T 5783
8	207010000003	2	Grease nipple M10×1 GB/T 1152
9	103008033055	4	Clamp board
10	101012010044	6	Keeper pin
11	103008033001	2	Shim
12	215010000234	6	Bolt M8×20-8.8-ZnD GB/T 5789
13	105001030060	4	Pin XGΦ30-80
14	105001030054	2	Washer
15	215010000235	2	Bolt M8×25-8.8-ZnD GB/T 5789
16	214030000006	4	Bearing, self-lubricating
17	103008033000	2	Shim
18	104016020023	6	U-clamp
19	105001030034	4	Sleeve
20	105001030055	2	Pin XGΦ30-105
21	215040000034	6	Washer 8-200HV-ZnD GB/T 97.1
22	103008033056	4	Pin XGΦ40-100[Z]
23	105051030003	1	Connection disc, steer right
24	105051030004	1	Steer disc, left
25	215030000026	14	Nut M8-8-ZnD GB/T889.1

1.6 STEER LINKAGE

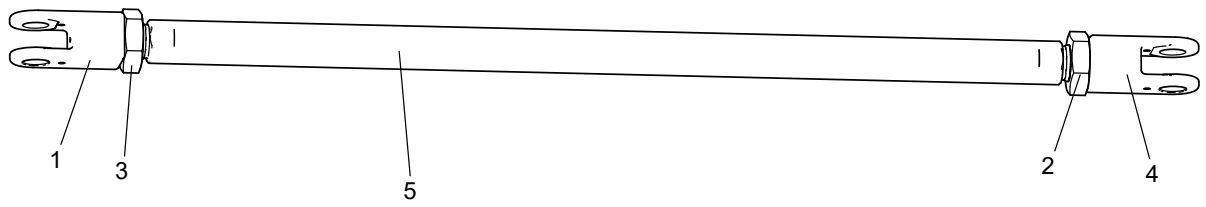

No.	Part No.	Qty.	Description
1	105001030041	1	Mounting head I
2	215030000065	1	Nut M42×2 GB/T 6173
3	215030000066	1	Nut M42×2-LH GB/T 6173
4	105001030047	1	Mounting head II
5	103008030058	1	Connecting rod

1.7 OSCILLATE CYLINDER INSTALLATION

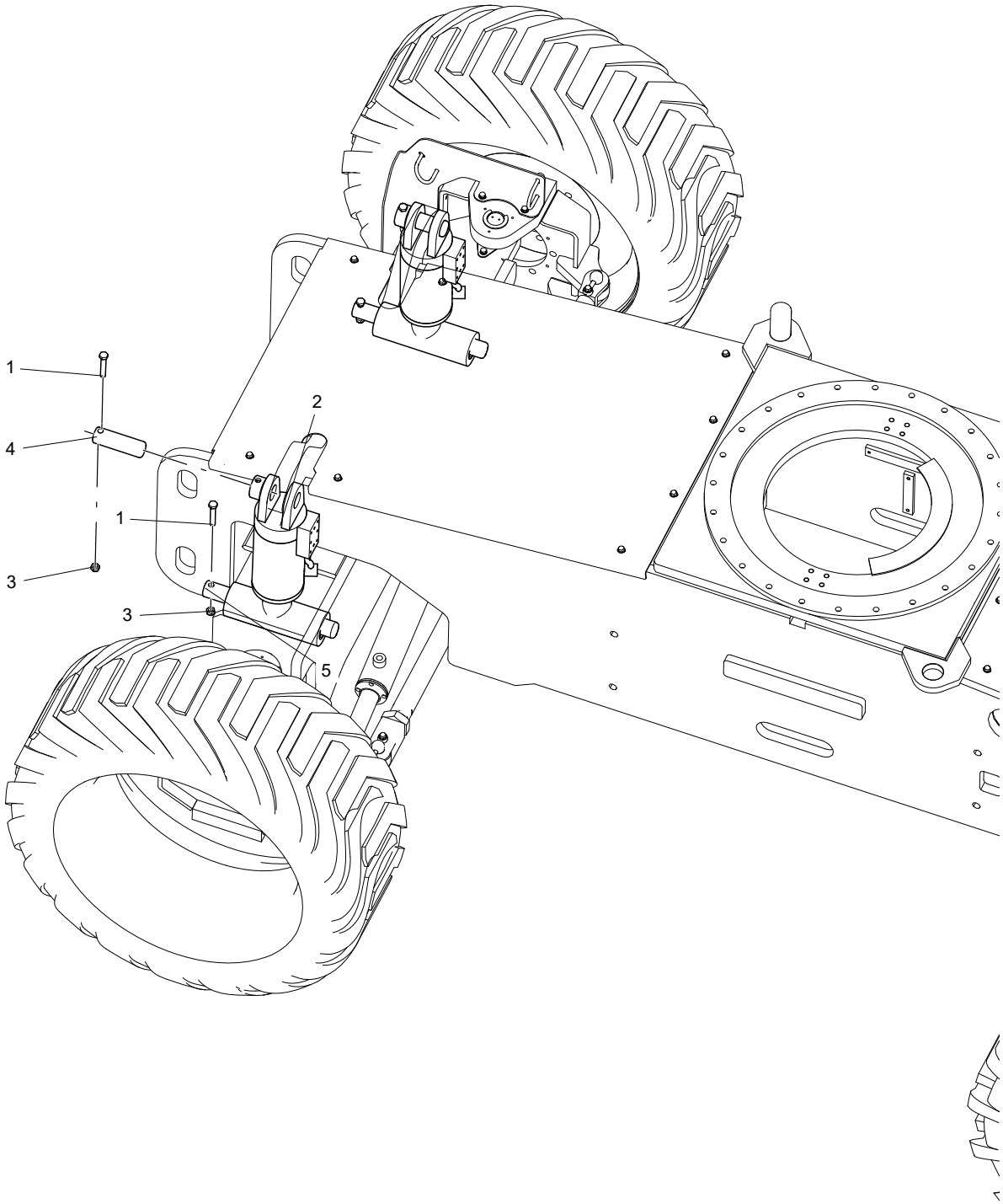

No.	Part No.	Qty.	Description
1	215010000106	4	Bolt M12×70-8.8-ZnD GB/T 5783
2	105001030077	2	Oscillate cylinder(C)
2a	207990003335	1	Seal kit, cylinder(Not shown)
3	215030000029	4	Nut M12-8-ZnD GB/T 6184
4	104008030005	2	Pin XGΦ40-125
5	103008030060	2	Pin XGΦ40-340

1.8 BATTERY HOLDER INSTALLATION

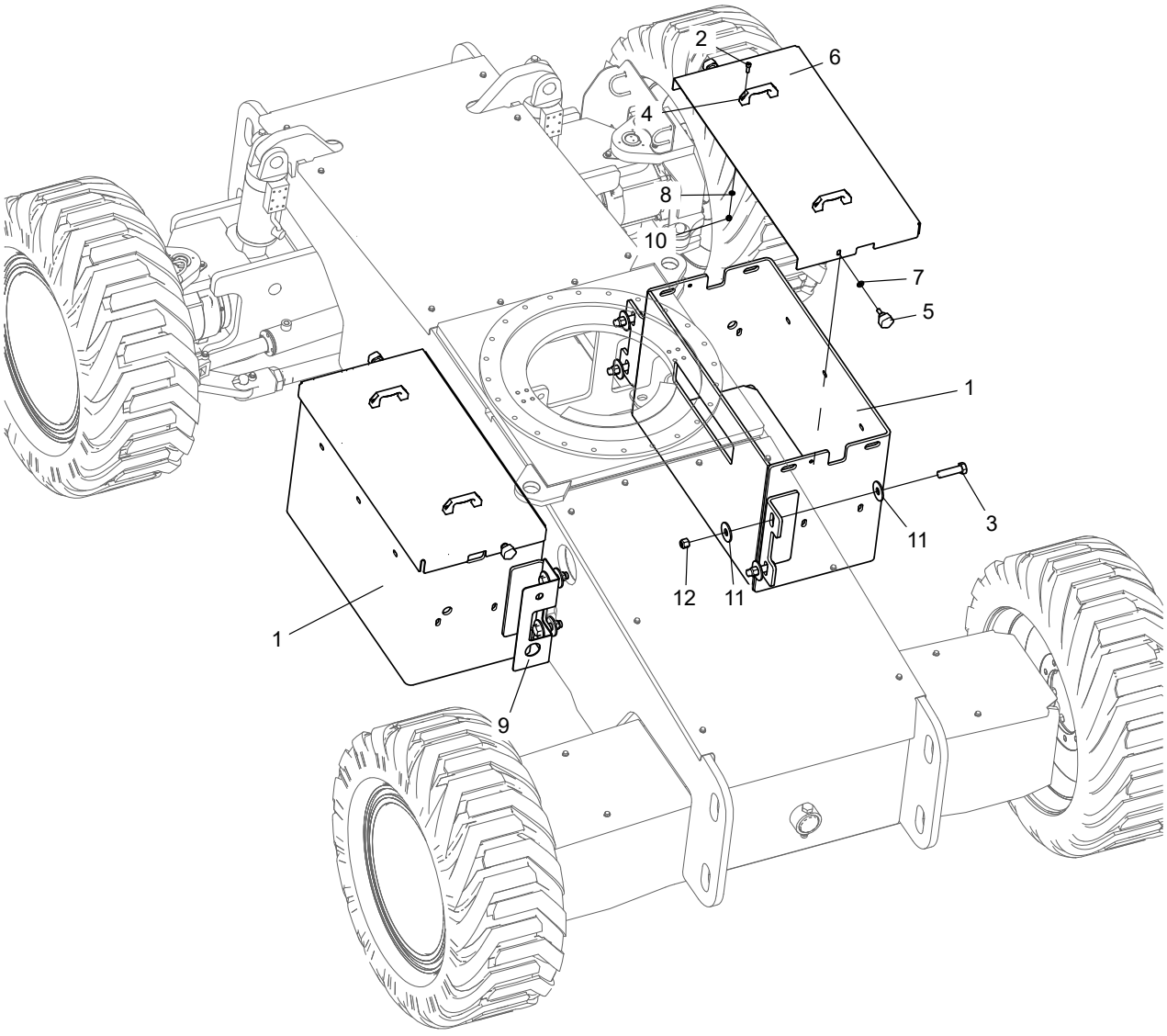

No.	Part No.	Qty.	Description
1	114001033002	2	Battery box
2	215020000024	8	Screw M8×25-8.8-ZnD GB/T 70.1
3	215010000210	8	Bolt M20×75-8.8-ZND-GB/T 5783
4	209030000003	4	Handle
5	209030000006	4	Bolt, star-headed
6	114001033003	2	Cover
7	215040000035	4	Washer 10-200HV-ZnD GB/T 97.1
8	215040000034	8	Washer 8-200HV-ZnD GB/T 97.1
9	114001033005	1	Plate, bending
10	215030000026	8	Nut M8-8-ZnD GB/T889.1
11	215040000022	16	Washer 20-200HV-ZnD GB/T 96.1
12	215030000098	8	Nut M20-8-ZnD GB/T 6184

 © Apr 2022

1.9 CHASSIS SHIELD INSTALLATION

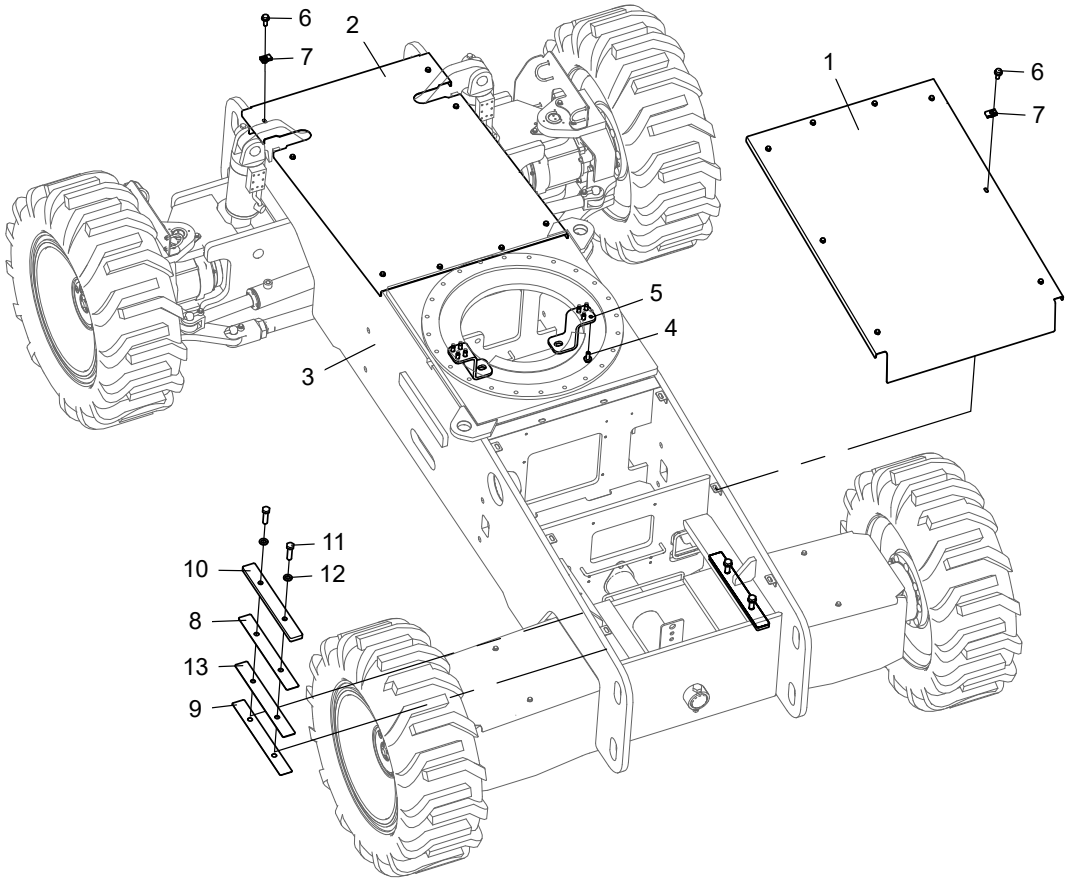

No.	Part No.	Qty.	Description
1	103008030045	1	Cover
2	103008030029	1	Cover
3	103008030015	1	Chassis
4	215010000261	8	Bolt M12×30-10.9 DKL GB/T 5789
5	105050033000	2	Bracket, hydraulic rotary coupler
6	215010000234	16	Bolt M8×20-8.8-ZnD GB/T 5789
7	215030000106	16	B type spring nuts
8	105031030013	2	Adjusting pad
9	105031030011	2	Adjusting pad
10	105031030026	2	Support plate
11	215010000118	4	Bolt M16×60-10.9-DKL GB/T 5783
12	215040000039	4	Washer 16-200HV-ZnD GB/T 97.1
13	103008033057	2	Adjusting pad

2 TURNTABLE COMPONENTS

2.1 SWING DRIVE INSTALLATION

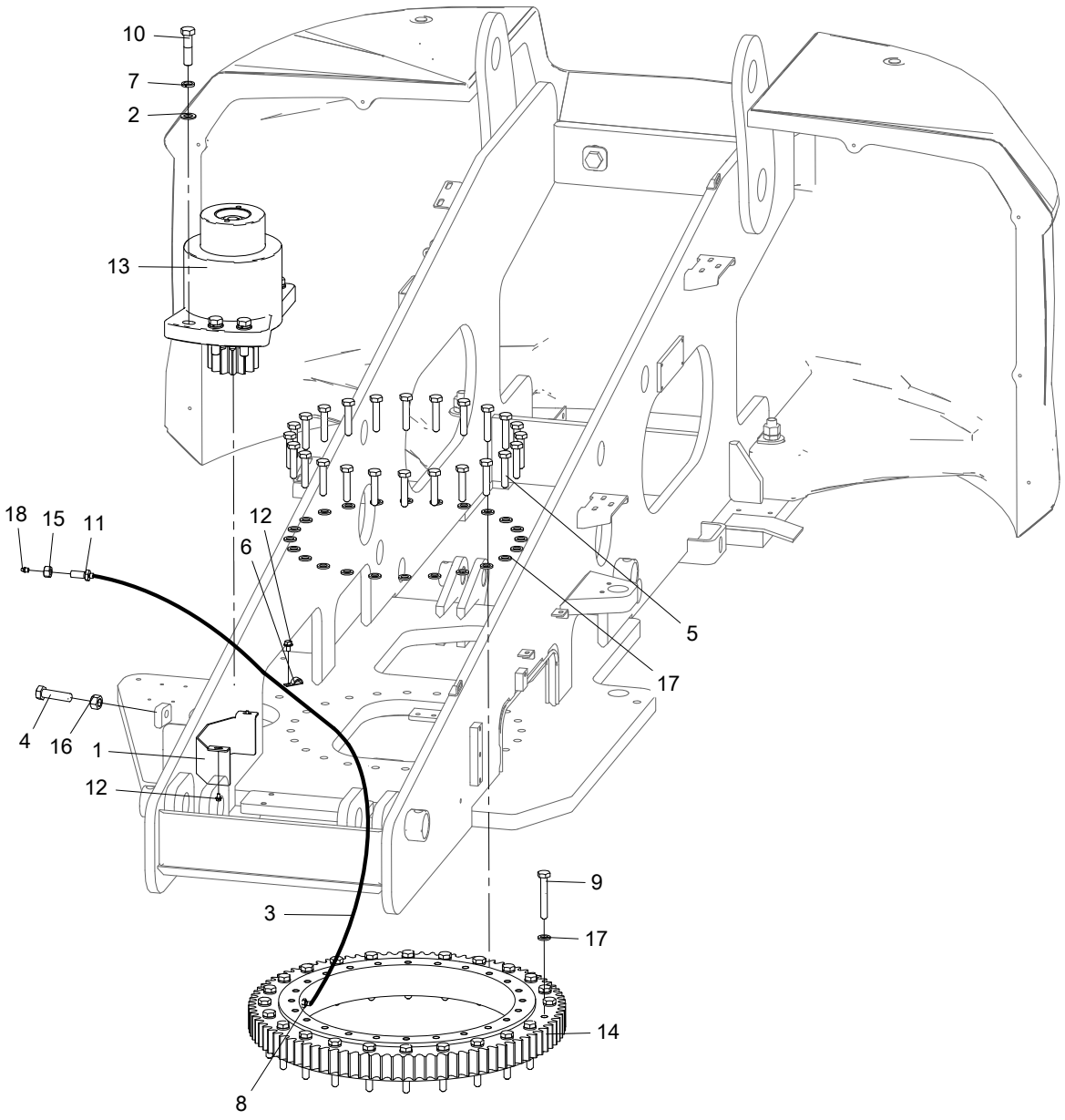

No.	Part No.	Qty.	Description
1	103008023105	1	Channel plate
2	105032023010	6	Pad
3	213050000698	1	Hose
4	215010000210	1	Bolt M20×75-8.8-ZND-GB/T 5783
5	215010000151	24	Bolt M16×80-10.9-DKL GB/T 1228
6	203080000275	1	Line clip, pvc dipping
7	207010000003	1	Grease nipple M10×1 GB/T 1152
8	213010000060	1	Fitting
9	215010000153	24	Bolt M16×110-10.9-DKL GB/T 1228
10	215010000027	6	Bolt M20×80-8.8-ZnD GB/T 5782
11	105001020225	1	Fitting
12	215010000229	3	Bolt M6×10-8.8-ZnD GB/T 5789
13	204020000002	1	Slewing reducer
13a	207060003009	1	Seal kit, slewing reducr
14	204120000001	1	Slewing bearing
15	215030000010	1	Nut M16-8-ZnD GB/T 6170
16	215030000012	1	Nut M20-8-ZnD GB/T 6170
17	215040000052	48	Washer 16-DKL GB/T 1230

2.2 SLEWING REDUCR (PN.204020000002)

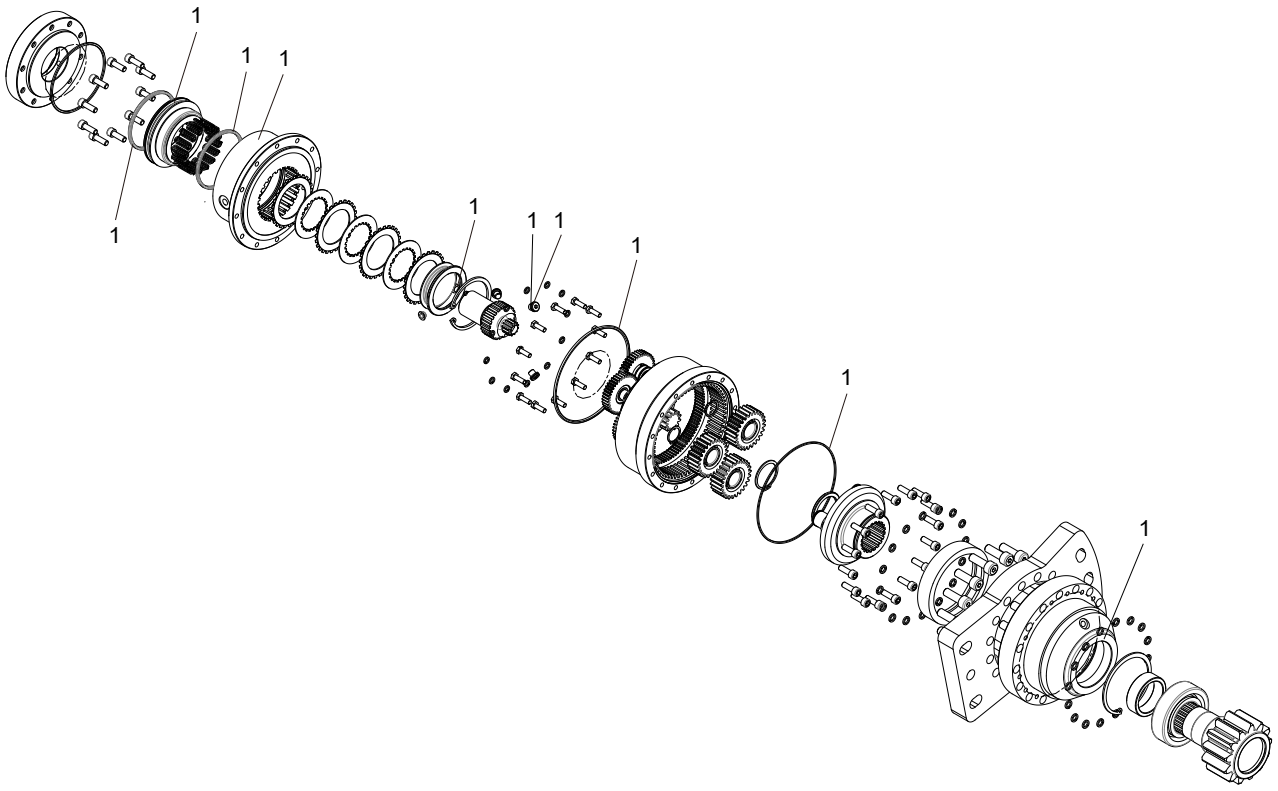

No.	Part No.	Qty.	Description
1	207060003009	1	Seal kit, slewing reducr

2.3 TURNTABLE LEFT HOODS INSTALLATION

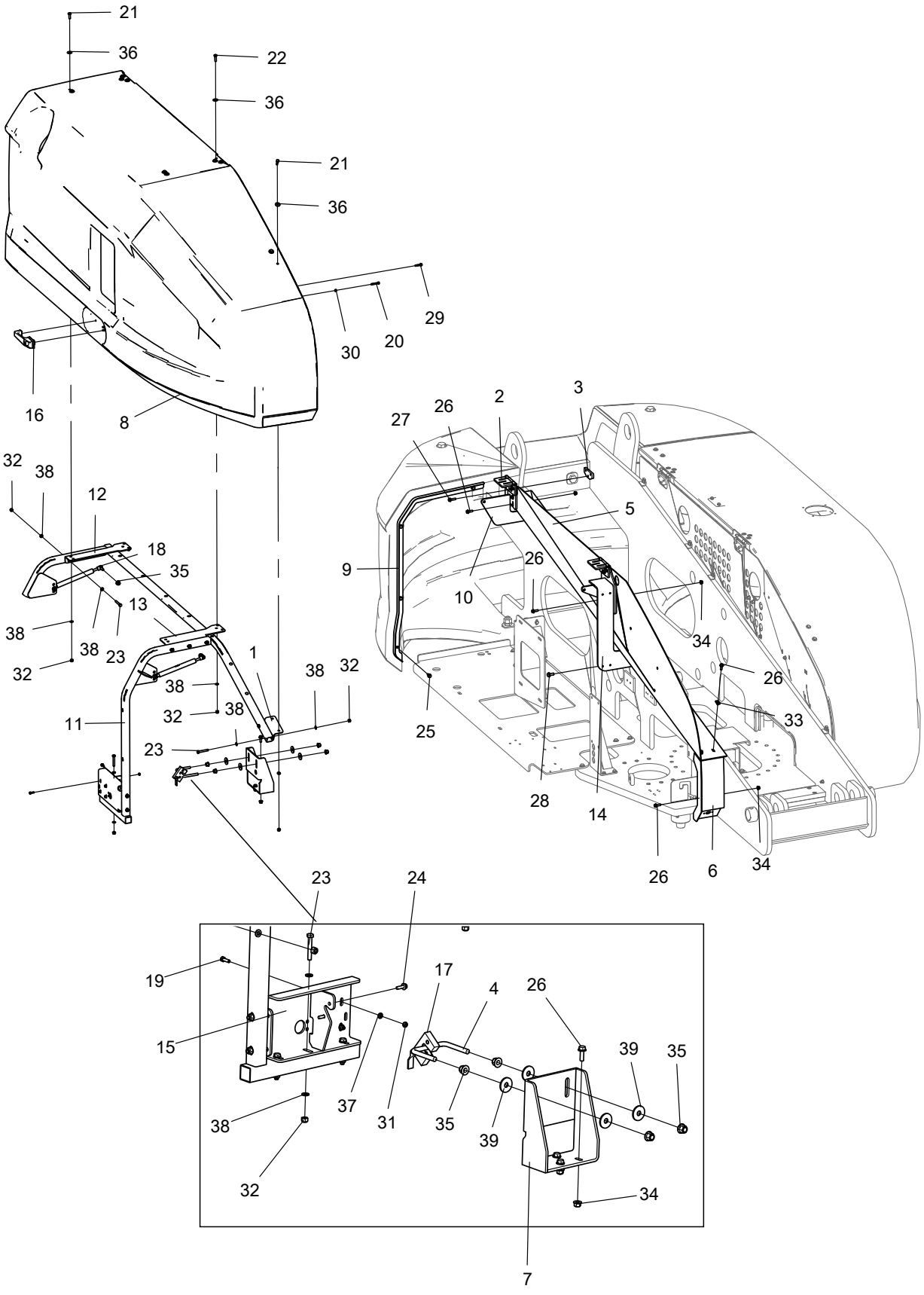

No.	Part No.	Qty.	Description
1	104021020048	1	Bracket
2	105001020118	2	Hinge
3	105021020162	2	Mounting plate
4	105021020163	1	U-bolt
5	105025023021	1	Plate, bending
6	105025023215	1	Seal plate, turntable cover
7	105026023019	1	Bracket
8	105029020003	1	Turntable cover, LH
9	105029020020	1	Bracket, left
10	105029020023	1	Bracket
11	105029020040	1	Steel frame, left
12	105029020042	1	Mounting plate, hinge
13	105029020051	1	Mounting plate, hinge
14	105029020062	1	Bracket
15	105029020065	1	Bracket
16	209030000009	1	Latch handle
17	209050000003	1	Latch, left
18	210010000063	2	Gas strut
19	215010000051	4	Bolt M6×20-A2-70 GB/T 5783
20	215010000054	1	Bolt M6×40-A2-70 GB/T 5783
21	215010000058	6	Bolt M8×25-8.8-ZnD GB/T 5783
22	215010000059	6	Bolt M8×30-8.8-ZnD GB/T 5783
23	215010000064	13	Bolt M8×55-8.8-ZnD GB/T 5783
24	215010000231	2	Bolt M6×20-8.8-ZnD GB/T 5789
25	215010000234	4	Bolt M8×20-8.8-ZnD GB/T 5789
26	215010000235	15	Bolt M8×25-8.8-ZnD GB/T 5789
27	215010000236	6	Bolt M8×30-8.8-ZnD GB/T 5789
28	215010000238	5	Bolt M10×25-8.8-ZnD GB/T 5789
29	215010000282	3	Bolt M6×30-8.8-ZnD GB/T 5789
30	215030000004	1	Nut M6-A2-70 GB/T 6170
31	215030000025	4	Nut M6-8-A2-70 GB/T 889.1
32	215030000026	25	Nut M8-8-ZnD GB/T889.1
33	215030000106	6	B type spring nuts
34	215030000108	9	Nut M8-8-ZnD GB/T 6183
35	215030000109	8	Nut M10-8-ZnD GB/T 6183
36	215040000015	12	Washer 8-200HV-ZnD GB/T 96.1
37	215040000033	4	Washer 6-A2 GB/T 97.1
38	215040000034	38	Washer 8-200HV-ZnD GB/T 97.1

No.	Part No.	Qty.	Description
39	215040000125	4	Washer 10-100HV-ZnD GB/T 5287

 © Apr 2022

2.4 TURNTABLE RIGHT HOODS INSTALLATION

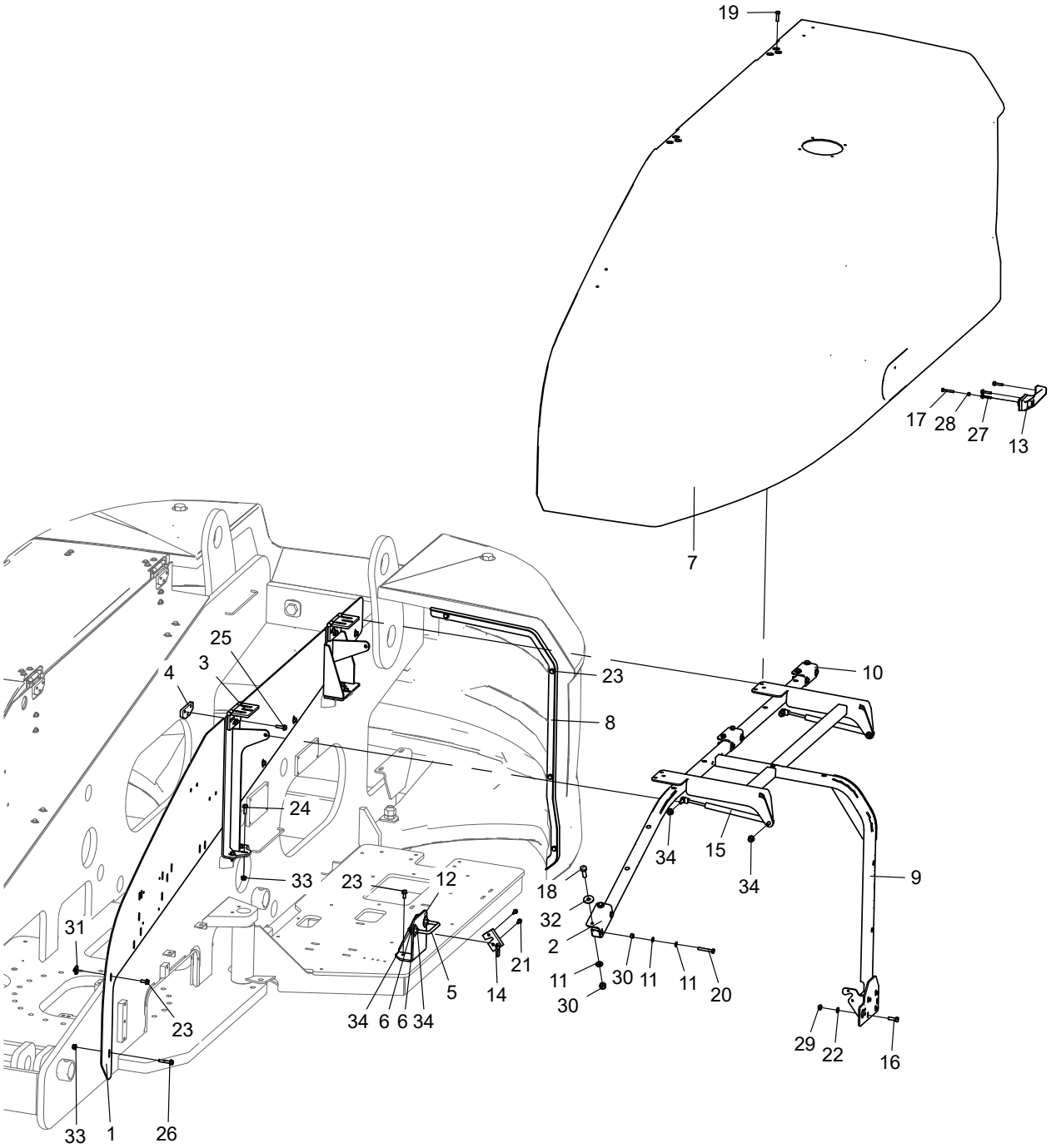

No.	Part No.	Qty.	Description
1	114002023022	1	Plate
2	104021020048	1	Bracket
3	105001020118	2	Hinge
4	105021020162	2	Mounting plate
5	105021020163	1	U-bolt
6	215040000125	4	Washer 10-100HV-ZnD GB/T 5287
7	105029020001	1	Turntable cover, right
8	105029020024	1	Bracket, right
9	105029020044	1	Bracket
10	105029020064	2	Bracket
11	215040000034	26	Washer 8-200HV-ZnD GB/T 97.1
12	105052023141	1	Bracket
13	209030000009	1	Latch handle
14	209050000002	1	Latch, right
15	210010000060	2	Gas strut
16	215010000051	4	Bolt M6×20-A2-70 GB/T 5783
17	215010000054	1	Bolt M6×40-A2-70 GB/T 5783
18	215010000058	6	Bolt M8×25-8.8-ZnD GB/T 5783
19	215010000059	6	Bolt M8×30-8.8-ZnD GB/T 5783
20	215010000064	6	Bolt M8×55-8.8-ZnD GB/T 5783
21	215010000231	2	Bolt M6×20-8.8-ZnD GB/T 5789
22	215040000033	4	Washer 6-A2 GB/T 97.1
23	215010000234	10	Bolt M8×20-8.8-ZnD GB/T 5789
24	215010000235	6	Bolt M8×25-8.8-ZnD GB/T 5789
25	215010000236	6	Bolt M8×30-8.8-ZnD GB/T 5789
26	215010000257	1	Bolt M8×45-8.8-ZnD GB/T 5789
27	215010000282	3	Bolt M6×30-8.8-ZnD GB/T 5789
28	215030000004	1	Nut M6-A2-70 GB/T 6170
29	215030000025	4	Nut M6-8-A2-70 GB/T 889.1
30	215030000026	18	Nut M8-8-ZnD GB/T889.1
31	215030000106	4	B type spring nuts
33	215030000108	7	Nut M8-8-ZnD GB/T 6183
34	215030000109	8	Nut M10-8-ZnD GB/T 6183
32	215040000015	4	Washer 8-200HV-ZnD GB/T 96.1

2.5 COUNTERWEIGHT INSTALLATION

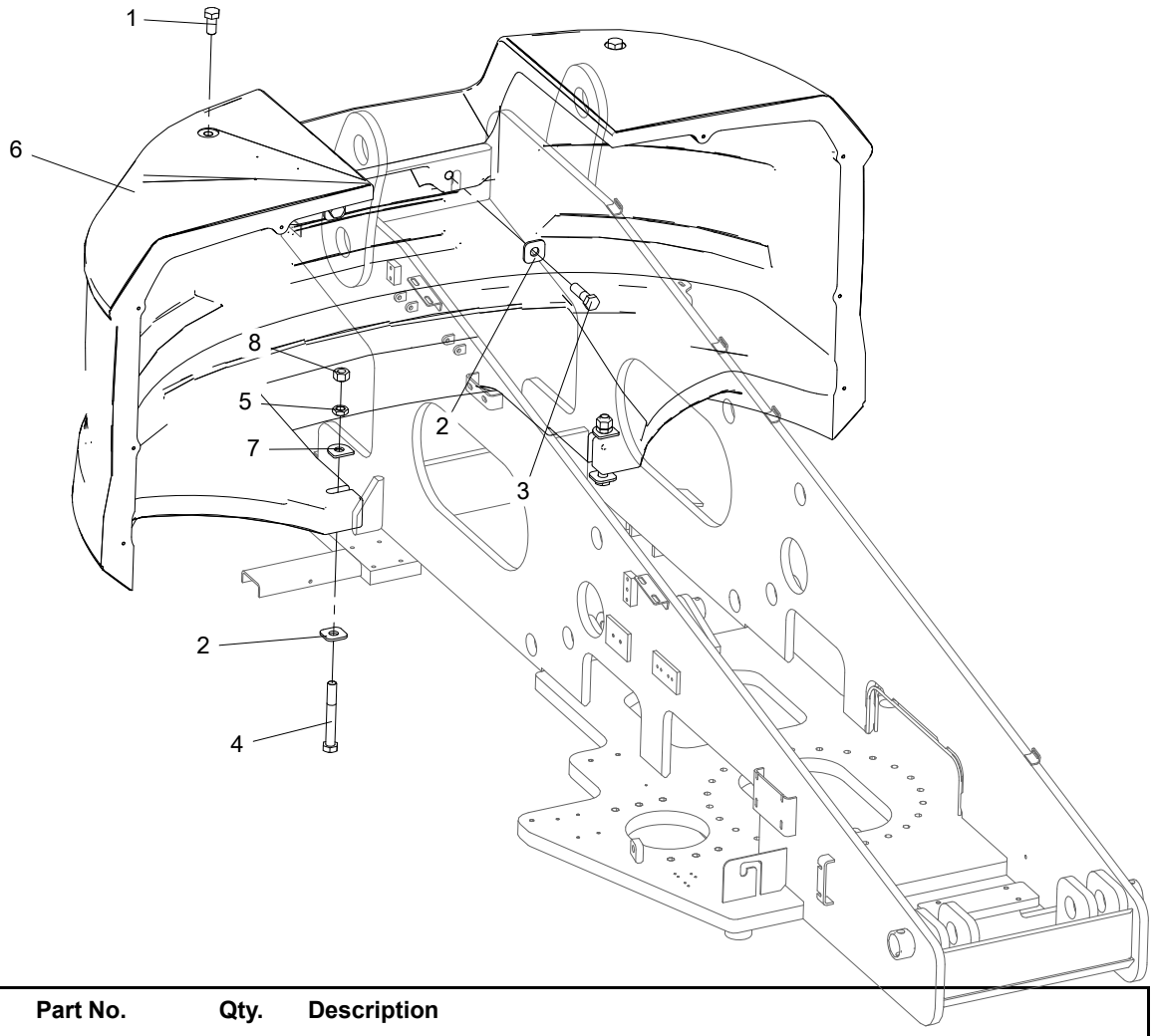

No.	Part No.	Qty.	Description
1	215010000187	2	Bolt M24×50-8.8-ZnD GB/T 5783
2	105001020138	4	Pad
3	215010000030	2	Bolt M24×90-8.8-ZnD GB/T 5782
4	215010000035	2	Bolt M24×180-8.8-ZnD GB/T 5782
5	215030000021	2	Nut M24-ZnD GB/T 6172.1
6	105025023018	1	Counterweight
7	105001020137	2	Pad
8	215030000014	2	Nut M24-8-ZnD GB/T 6170

2.6 ELECTRIC POWER SYSTEM

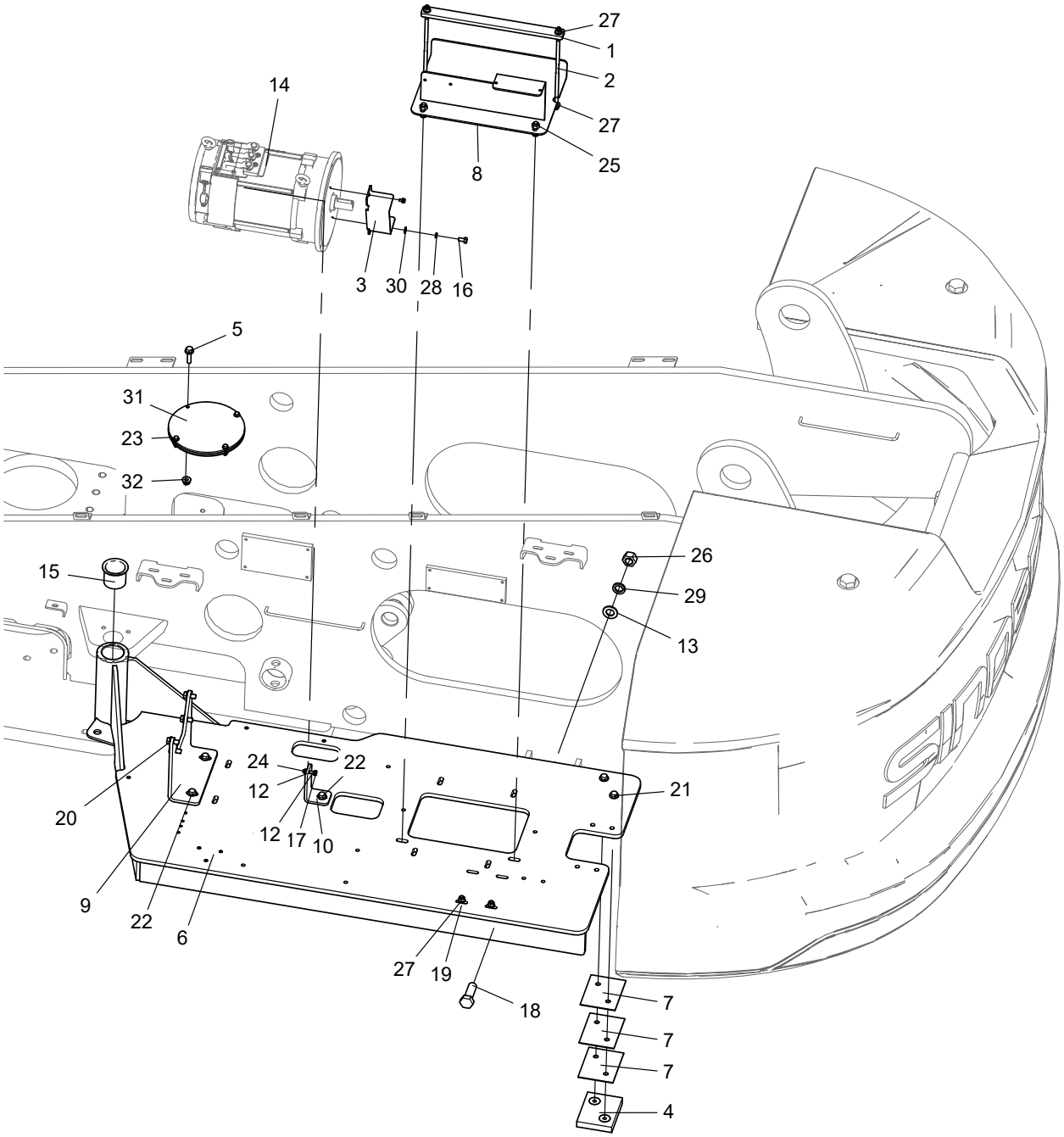

No.	Part No.	Qty.	Description
1	103008023012	1	Plate
2	103008023013	2	Tie rod
3	103008023156	1	Guard
4	105025023260	1	Wear pad assembly
6	105032023103	1	Mount, engine
7	114002023000	3	Pad, wear
8	114004023011	1	Bracket
9	114004023019	1	Plate, bending
10	114004023020	1	Plate, bending
11	202010000041	1	Power unit, 12V
12	215040000033	2	Washer 6-A2 GB/T 97.1
13	215040000041	2	Washer 20-200HV-ZnD GB/T 97.1
14	203010003018	1	Hybrid motor
15	214030000021	2	Bearing 50×55×50 SF-1F
16	215010000040	2	Bolt M5×10-A2-70 GB/T 5783
17	215010000053	1	Bolt M6×30-A2-70 GB/T 5783
18	215010000128	1	Bolt M20×60-8.8-ZnD GB/T 5783
19	215010000236	4	Bolt M8×30-8.8-ZnD GB/T 5789
20	215010000237	4	Bolt M10×20-8.8-ZnD GB/T 5789
21	215010000239	4	Bolt M10×30-8.8-ZnD GB/T 5789
22	215010000248	3	Bolt M10x35-8.8 ZnD GB/T 5789
24	215030000004	1	Nut M6-A2-70 GB/T 6170
25	215030000006	2	Nut M10-8-ZnD GB/T 6170
26	215030000012	1	Nut M20-8-ZnD GB/T 6170
27	215030000108	8	Nut M8-8-ZnD GB/T 6183
28	215040000003	2	Washer 5-A2-70 GB/T 93
29	215040000009	1	Washer 20-ZnD GB/T 93
30	215040000032	2	Washer 5-A2 GB/T 97.1
5	215010000232	4	Bolt M6×25-8.8-ZnD GB/T 5789
23	105038020018	1	Bottom plate
31	103008023402	1	Plate
32	215030000107	4	Nut M6-8-ZnD GB/T 6183

2.7 TURNTABLE SHIELD INSTALLATION

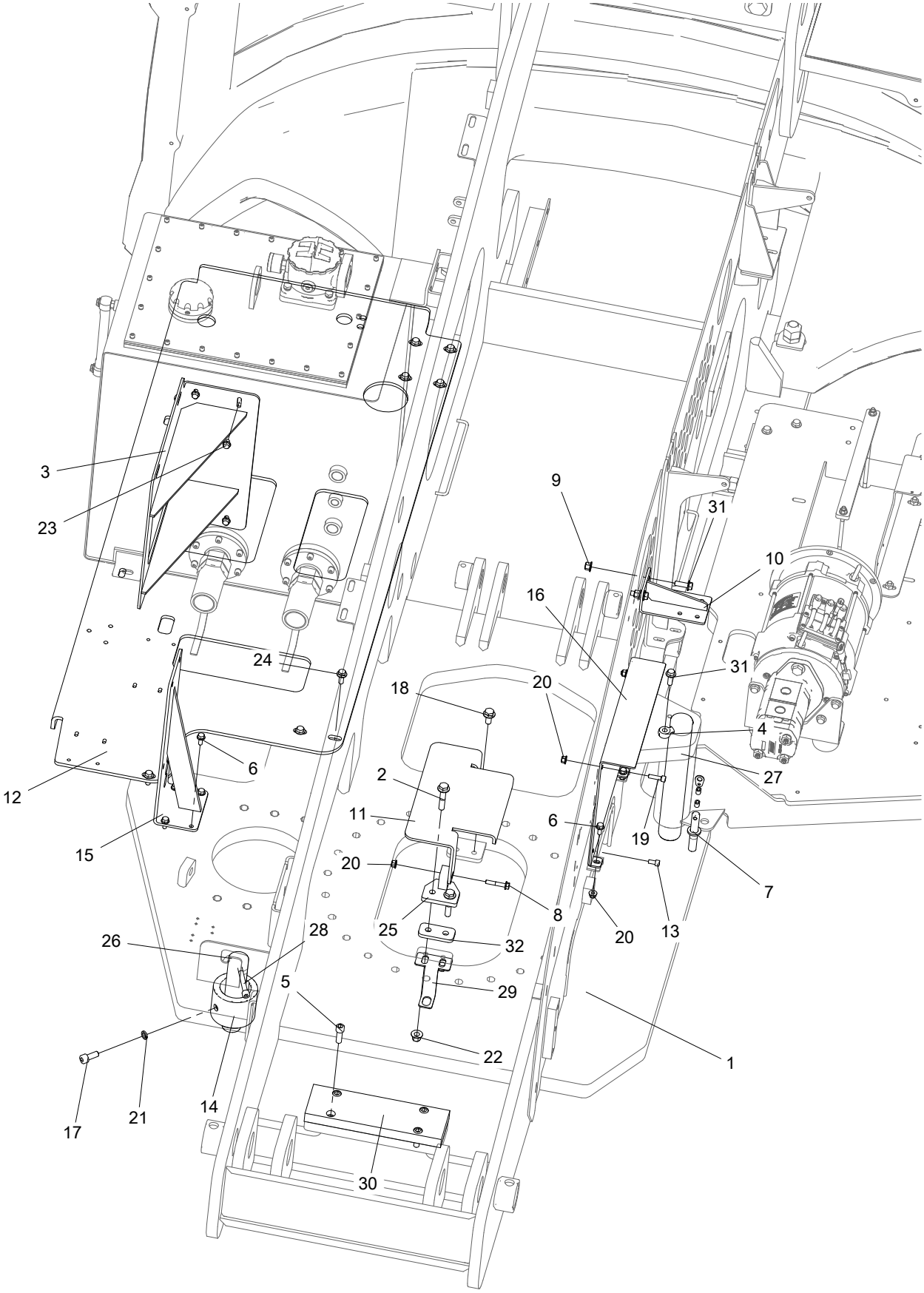

No.	Part No.	Qty.	Description
1	105025023013	1	Weldment, turntable
2	215010000253	2	M12×60-8.8-ZnD GB/T 5789
3	105025020046	1	Bracket, ground controller
4	209020000002	1	Keeper pin Φ12-75
5	215020000076	4	Screw M12×35-8.8-ZnD GB/T 70.1
6	215010000234	6	Bolt M8×20-8.8-ZnD GB/T 5789
7	105001020178	1	Safety pin
8	215010000257	2	Bolt M8×45-8.8-ZnD GB/T 5789
9	215030000109	2	Nut M10-8-ZnD GB/T 6183
10	103007023002	1	Bracket, filter
11	114002023006	1	Cover
12	105025023233	1	Bottom plate
13	215020000022	2	Screw M8×16-8.8-ZnD GB/T 70.1
14	103008023102	1	Buffer bush
15	105025023410	1	Bracket, boom function mainifold
16	114002023003	1	Bracket, motor controller
17	215020000023	2	Screw M8×20-8.8-ZnD GB/T 70.1
18	215010000262	2	Bolt M12×25-10.9 DKL GB/T 5789
19	215020000025	2	Screw M8×30-8.8-ZnD GB/T 70.1
20	215030000108	6	Nut M8-8-ZnD GB/T 6183
21	215040000005	2	Washer 8-ZnD GB/T 93
22	215030000110	2	Nut M12-8-ZnD GB/T 6183
23	215010000233	4	Bolt M8×12-8.8-ZnD GB/T 5789
24	215010000238	7	Bolt M10×25-8.8-ZnD GB/T 5789
25	114002023007	2	Shift fork
26	103008023100	1	Pin XGΦ45-210
27	105001020165	1	Pin XGΦ50-347
28	215020000070	1	Screw M10×100-8.8-ZnD GB/T 70.1
29	105001010199	1	Mounting plate, rear detection switch
30	105001020167	1	Plate, nylon
31	215010000239	3	Bolt M10×30-8.8-ZnD GB/T 5789
32	105025023236	1	Plate

3 BOOM COMPONENTS

3.1 BOOM LINK ASSEMBLY

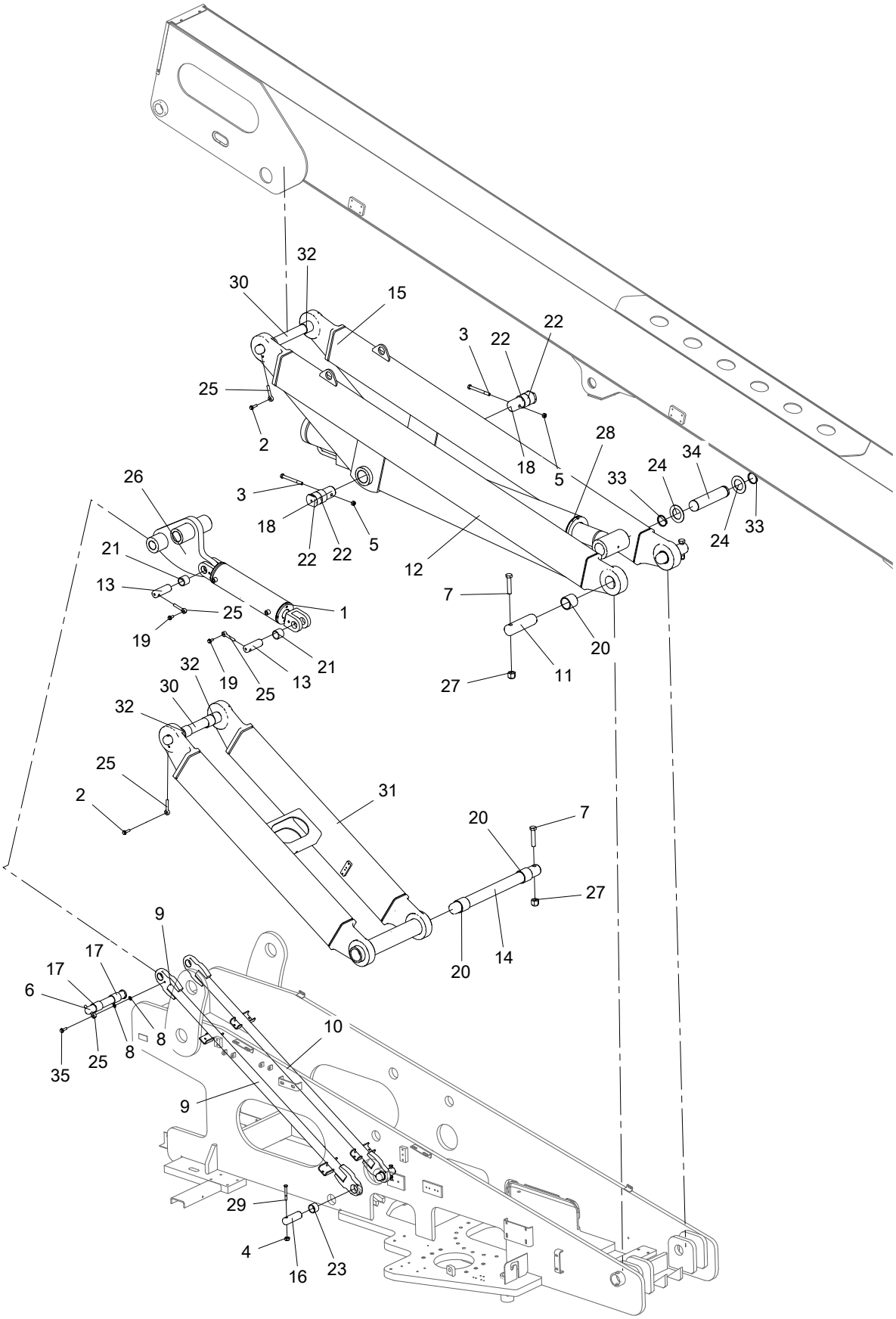

No.	Part No.	Qty.	Description
1	105025013412	1	Level cylinder, lower(A)
1a-1	207990003154	1	Seal kit, cylinder(1000145)
1a-2	207990003087	1	Seal kit，cylinder(1000026)
1a-3	207990003062	1	Seal kit, cylinder(1000148)
2	215010000240	2	Bolt M10×40-8.8-ZnD GB/T 5789
3	215010000170	2	Bolt M14×140-8.8 GB/T 5782
4	215030000027	2	Nut M10-8-ZnD GB/T 6184
5	215030000080	2	Nut M14-8-ZnD GB/T 6184
6	105003010083	1	Pin XGΦ40-295
7	215010000206	3	Bolt M20×100-10.9-DKL GB/T 5782
8	215040000035	2	Washer 10-200HV-ZnD GB/T 97.1
9	105026013219	1	Link
10	105026013216	1	Link
11	105031013003	2	Pin XGΦ60-210
12	105055013004	1	Cylinder support arm
13	105001010235	2	Pin XGΦ40-120
14	105026013250	1	Pin XGΦ60-695
15	105055013002	1	Cylinder support arm
16	105051013241	2	Pin XGΦ40-120
17	214030000054	2	Bearing, self-lubricating
18	105026013257	2	Clevis pin XJΦ60-168
19	215010000238	2	Bolt M10×25-8.8-ZnD GB/T 5789
20	214030000090	4	Bushing, self-lubricating
21	214030000053	2	Bearing, self-lubricating
22	214030000060	4	Bushing, self-lubricating
23	214010003000	2	Bearing, self-lubricating
24	105001010142	2	Washer
25	209020000002	5	Keeper pin Φ12-75
26	105026013226	1	Connector
27	215030000098	3	Nut M20-8-ZnD GB/T 6184
28	105025013177	1	Lift cylinder(A)
28a	207990003069	1	Seal kit, cylinder
29	215010000012	2	Bolt M10×80-8.8-ZnD GB/T 5782
30	105025013095	2	Clevis pin XJΦ50-485
31	105026013174	1	Riser arm, lower
32	214030000067	6	Bushing, self-lubricating
33	215040000100	2	Retaining ring 60-DKL JB/ZQ 4342

No.	Part No.	Qty.	Description
34	105025013096	1	Pin XGΦ60-270
35	215010000248	1	Bolt M10x35-8.8 ZnD GB/T 5789

3.2 BASE BOOM INSTALLATION

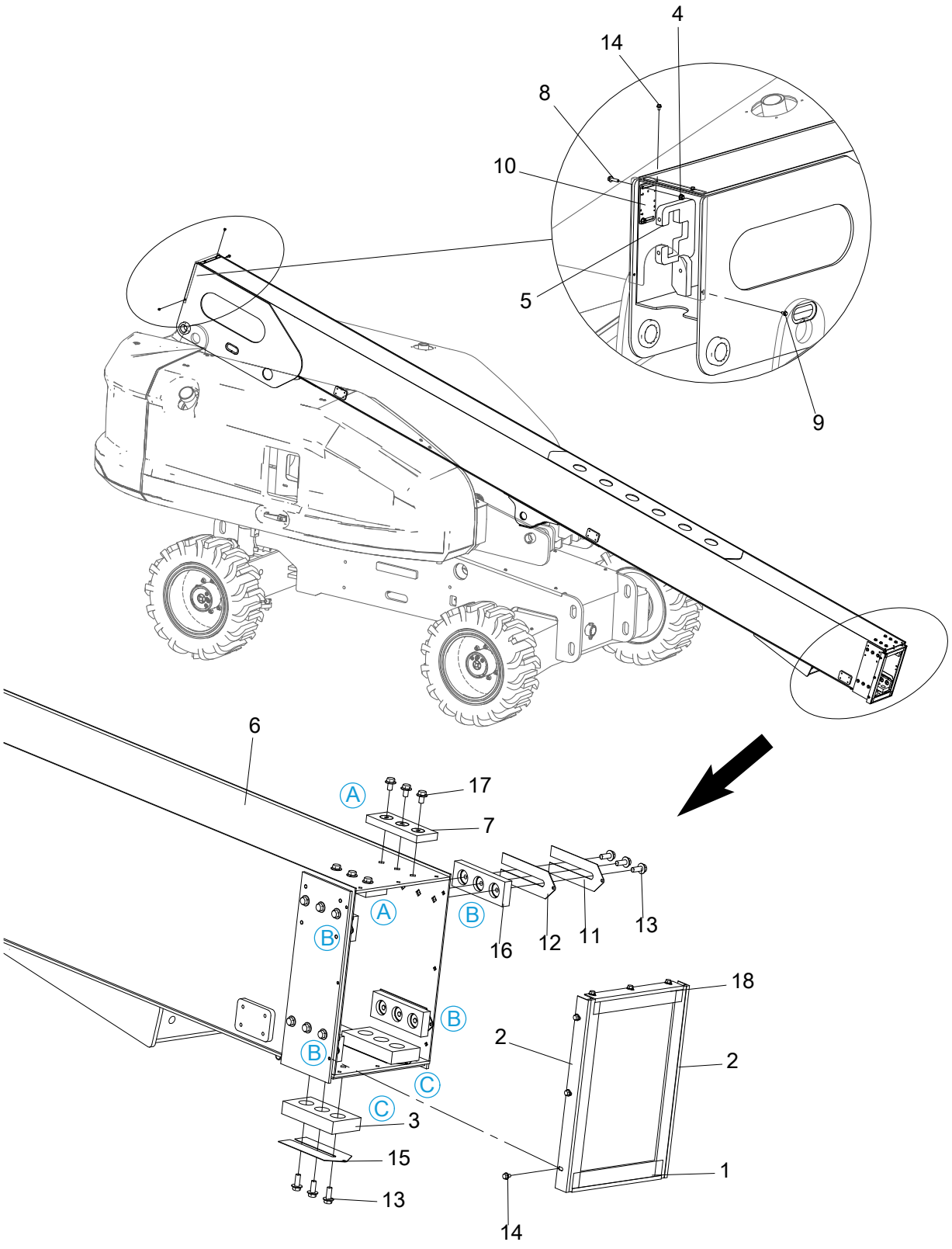

No.	Part No.	Qty.	Description
1	105055013012	1	Nylon brush
2	105055013008	2	Nylon brush
3	105048010033	2	Wear pad assembly
4	215030000108	2	Nut M8-8-ZnD GB/T 6183
5	105026013138	1	Plate
6	105026013046	1	Base boom
7	105021010113	2	Wear pad assembly
8	215010000236	2	Bolt M8×30-8.8-ZnD GB/T 5789
9	215010000281	2	Bolt M6×12-8.8-ZnD GB/T 5789
10	105001010200	1	Mount, angle sensor
11	104009010103	4	Shim
12	104011010072	4	Shim
13	215010000238	18	Bolt M10×25-8.8-ZnD GB/T 5789
14	215010000229	14	Bolt M6×10-8.8-ZnD GB/T 5789
15	105031013002	2	Shim
16	105067013071	4	Wear pad assembly
17	215010000245	6	Bolt M10×16-8.8-ZnD GB/T 5789
18	105055013009	1	Nylon brush

3.3 TELESCOPIC BOOM 1 INSTALLATION

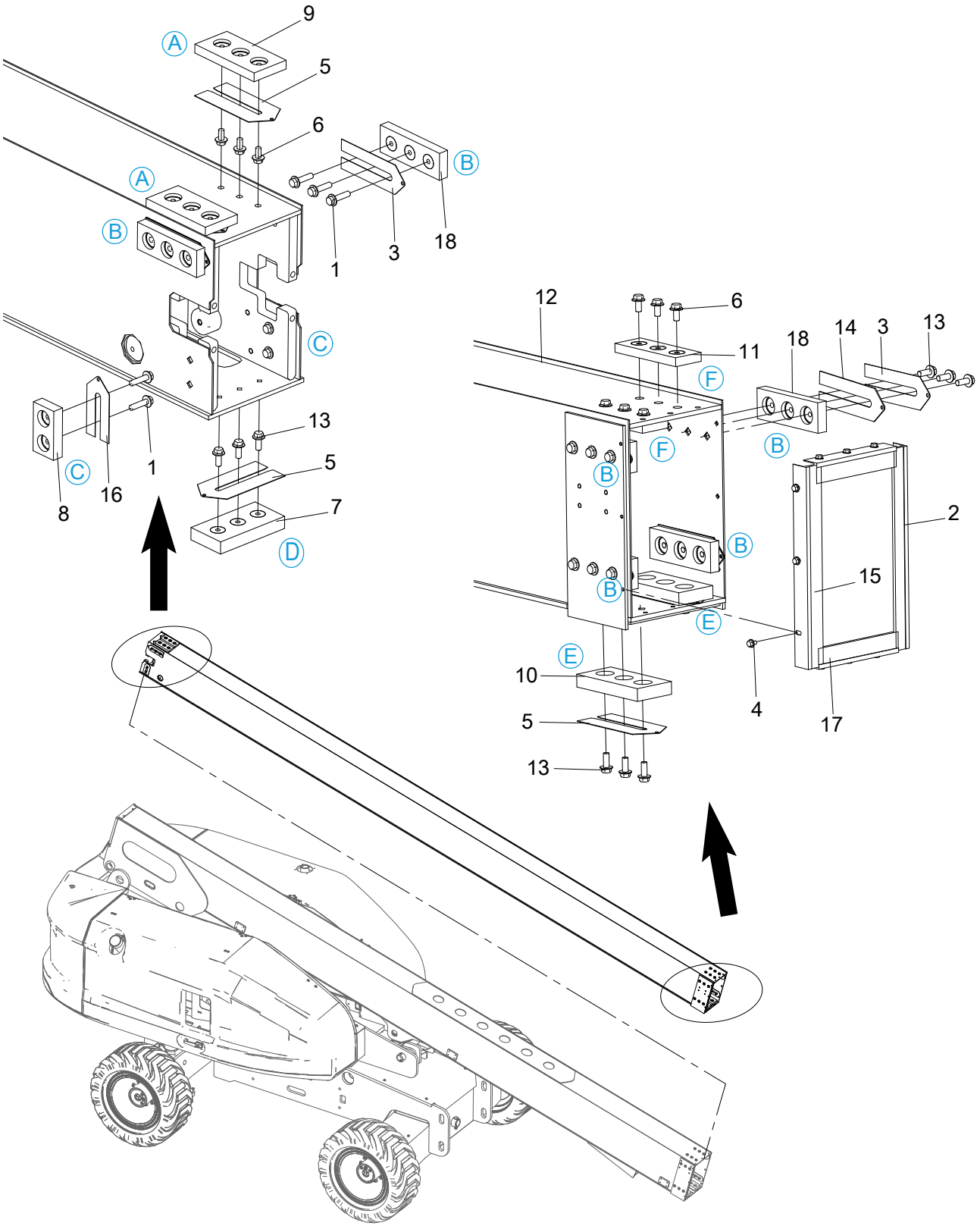

No.	Part No.	Qty.	Description
1	215010000240	10	Bolt M10×40-8.8-ZnD GB/T 5789
2	105055013011	1	Nylon brush
3	104009010103	6	Shim
4	215010000229	12	Bolt M6×10-8.8-ZnD GB/T 5789
5	105031013002	5	Shim
6	215010000237	12	Bolt M10×20-8.8-ZnD GB/T 5789
7	105047010044	1	Wear pad assembly
8	105067013070	2	Wear pad assembly
9	104008010103	2	Wear pad assembly
10	105021010105	2	Wear pad assembly
11	105021010113	2	Wear pad assembly
12	105026013116	1	Telescopic boom, #1
13	215010000238	21	Bolt M10×25-8.8-ZnD GB/T 5789
14	104011010072	6	Shim
15	105055013010	1	Nylon brush
16	105049013000	2	Shim
17	105055013013	2	Nylon brush
18	105067013071	6	Wear pad assembly

3.4 TELESCOPIC BOOM 2 INSTALLATION

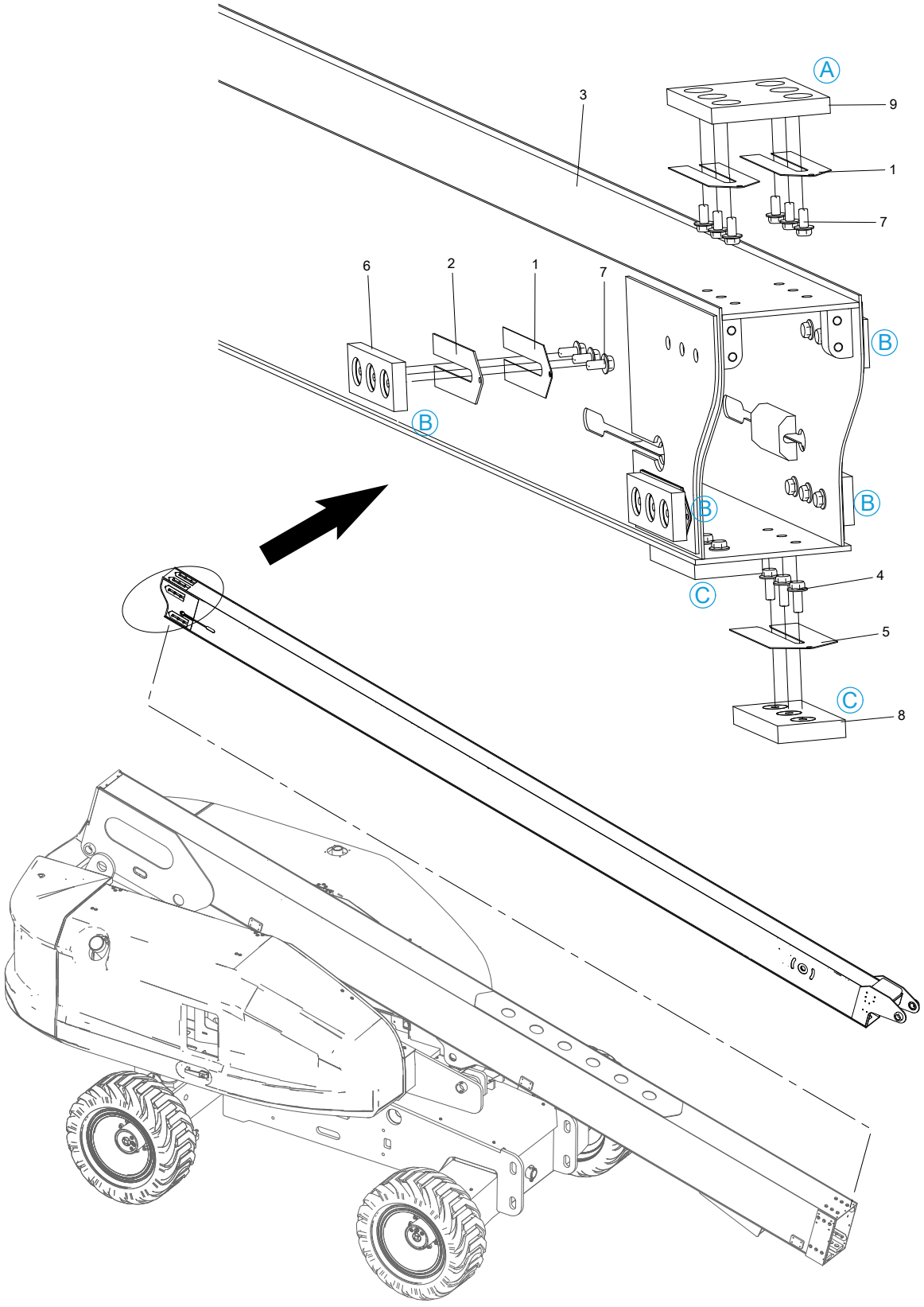

No.	Part No.	Qty.	Description
1	104009010103	6	Shim
2	104011010072	4	Shim
3	105026013060	1	Telescopic boom, #2
4	215010000238	6	Bolt M10×25-8.8-ZnD GB/T 5789
5	105031013002	2	Shim
6	105067013069	4	Wear pad assembly
7	215010000237	18	Bolt M10×20-8.8-ZnD GB/T 5789
8	105047010037	2	Wear pad assembly
9	105050013139	1	Wear pad assembly

3.5 CABLE TRACK INSTALLATION

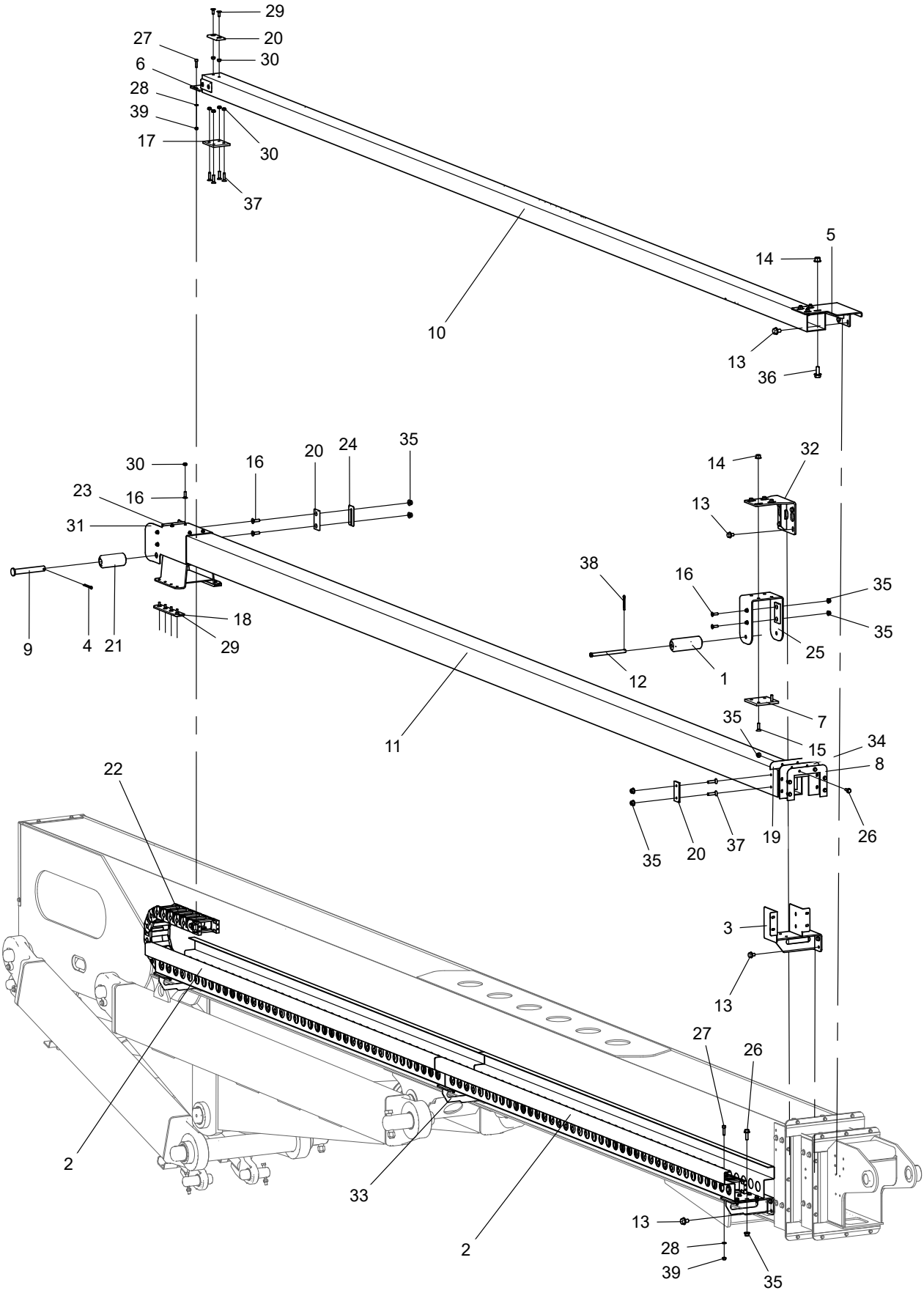

No.	Part No.	Qty.	Description
1	105019010183	1	Roller
2	105025013026	2	Channel
3	105067013064	1	Bracket
4	215060000007	1	Pin 4×32-ZnD GB/T 91
5	105025013023	1	Bracket
6	105001010080	1	Plate
7	105001010102	1	Wear pad, nylon
8	105001010111	1	Plate
9	215060000053	1	Pin B20×140-ZnD GB/T 882
10	105026013048	1	Guide tube, inner
11	105026013075	1	Guide tube, outer
12	105019010179	1	Pin
13	215010000233	24	Bolt M8×12-8.8-ZnD GB/T 5789
14	215030000108	8	Nut M8-8-ZnD GB/T 6183
15	215020000228	4	Screw M8×30-8.8-ZnD GB/T 70.3
16	215020000229	16	Screw M6×20-A2-70 GB/T 70.3
17	105001010241	1	Wear pad, nylon
18	105001010094	2	Wear pad
19	105001010101	1	Plate
20	105029010012	10	Stop block
21	105001010084	1	Roller
22	204190003002	1	Cable track and joints
23	105001010079	2	Plate, fixing
24	105029010014	2	Shim
25	105031013017	1	Bracket
26	215010000231	24	Bolt M6×20-8.8-ZnD GB/T 5789
27	215020000008	4	Screw M5×20-A2-70 GB/T 70.1
28	215040000032	4	Washer 5-A2 GB/T 97.1
29	215020000236	14	Screw M6×16-A2-70 GB/T 70.3
30	215030000025	18	Nut M6-8-A2-70 GB/T 889.1
31	105021010125	1	Slide bush
32	105001010112	1	Bracket
33	105001010114	3	Bracket, channel
34	105001010090	1	Rubber
35	215030000107	38	Nut M6-8-ZnD GB/T 6183
36	215010000234	4	Bolt M8×20-8.8-ZnD GB/T 5789
37	215020000230	10	Screw M6×25-A2-70 GB/T 70.3
38	215060000066	1	Pin 4×25-ZnD GB/T 91

No.	Part No.	Qty.	Description
39	215030000091	4	Nut M5-A2-70 GB/T 6184

3.6 TELESCOPIC MECHANISM

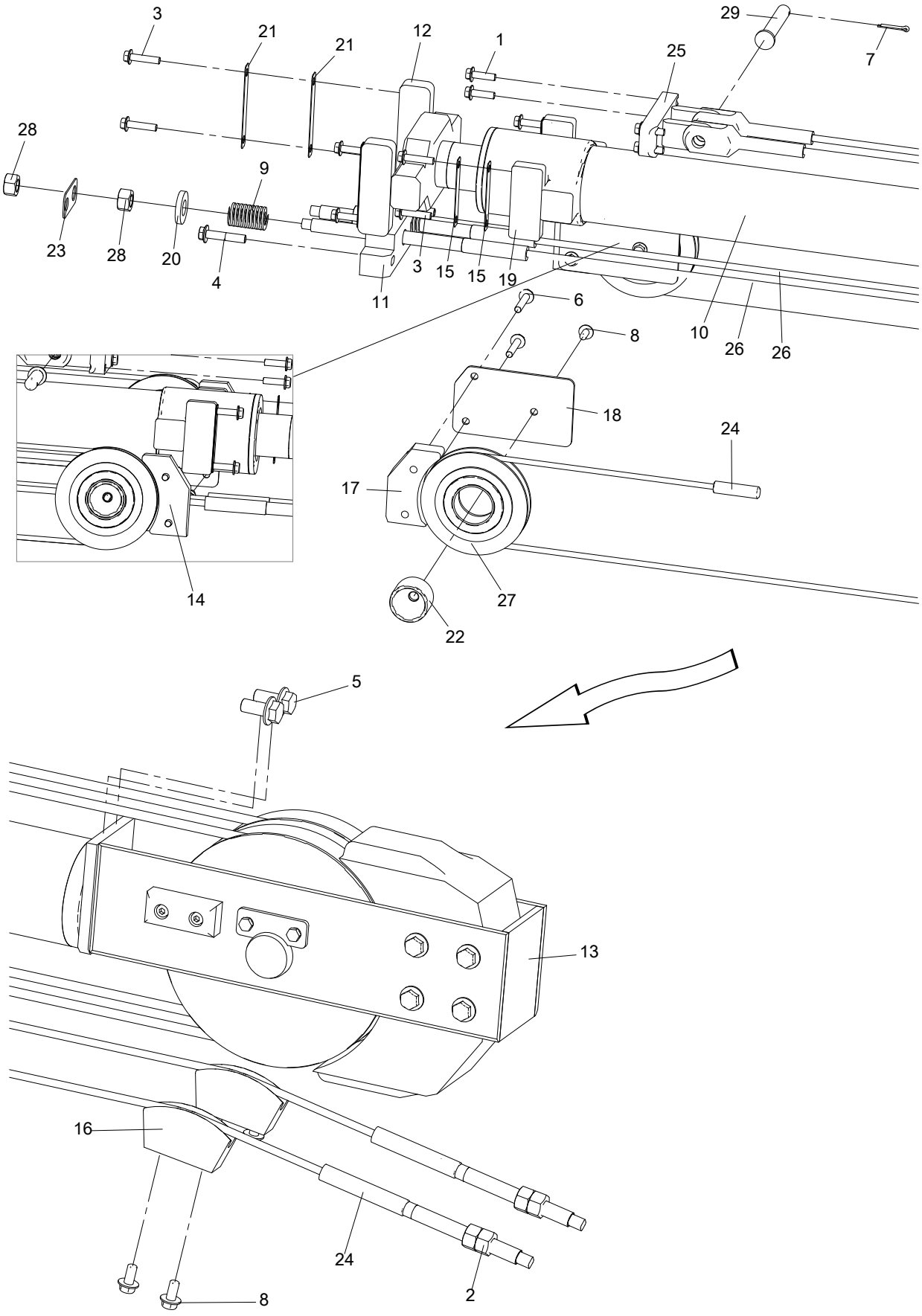

No.	Part No.	Qty.	Description
1	215010000248	4	Bolt M10x35-8.8 ZnD GB/T 5789
2	215030000010	4	Nut M16-8-ZnD GB/T 6170
3	215010000246	8	Bolt M10x45-8.8 ZnD GB/T 5789
4	215010000253	2	M12×60-8.8-ZnD GB/T 5789
5	215010000252	4	Bolt M14×30-8.8-ZnD GB/T 5789
6	215010000258	4	Bolt M10×55-8.8-ZnD GB/T 5789
7	215060000009	1	Pin 5×32-ZnD GB/T 91
8	215010000237	6	Bolt M10×20-8.8-ZnD GB/T 5789
9	210070000003	2	Spring TF35-055
10	105025013086	1	Telescope cylinder(C)
10a	207990003070	1	Seal kit, cylinder
11	105026013209	1	Plate, broken cable detection
12	105001010029	2	Press block, cylinder
13	105026013210	1	Sheave assembly
14	105025013070	1	Stop block
15	105025013059	4	Shim
16	105021010094	2	Guide block
17	105025013067	1	Stop block
18	105025013066	2	Plate
19	105025013064	2	Press block, cylinder
20	105021010194	2	Plate
21	105001010038	4	Shim
22	105001010065	2	Bushing
23	105001010253	2	Plate, detection
24	105026013205	2	Retract cable
25	105026013178	1	Retainer, upper cable
26	105026013182	2	Extend cable
27	105025013074	2	Roller assembly
28	215030000012	4	Nut M20-8-ZnD GB/T 6170
29	215060000052	1	Pin B20×120-ZnD GB/T 882

3.7 HEAD SHEAVE ASSEMBLY

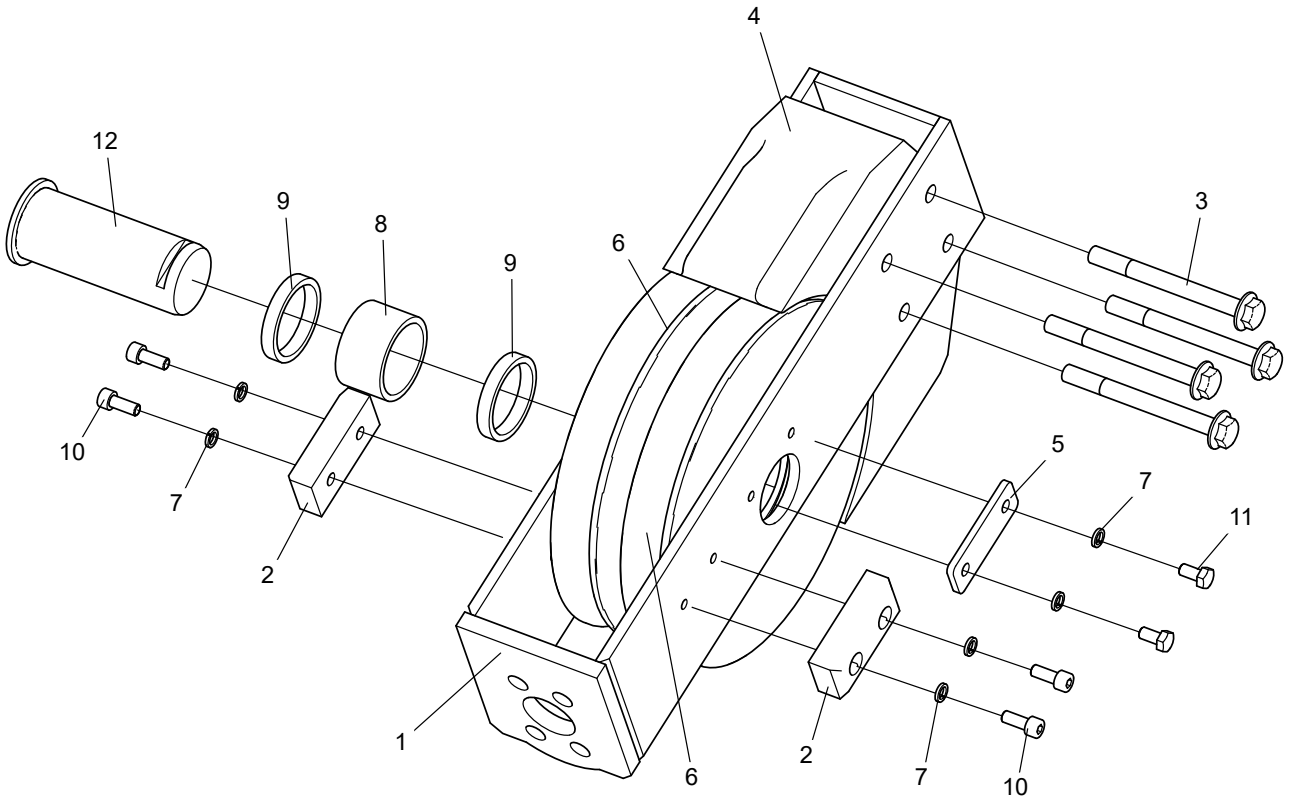

No.	Part No.	Qty.	Description
1	105021010080	1	Retainer, head sheave
2	105025013075	2	Wear pad
3	215010000254	4	Bolt M12×120-8.8-ZnD GB/T 5789
4	105025013077	1	Wear pad
5	105021010067	1	Plate
6	105021010083	2	Roller assembly
7	215040000005	6	Washer 8-ZnD GB/T 93
8	105001010043	1	Sleeve
9	105001010072	2	Sleeve
10	215020000023	4	Screw M8×20-8.8-ZnD GB/T 70.1
11	215010000056	2	Bolt M8×16-8.8-ZnD GB/T 5783
12	105021010066	1	Clevis pin XJΦ50-128

3.8 JIB BOOM INSTALLATION-TB20J PLUS&20EJ PLUS&20HJ PLUS

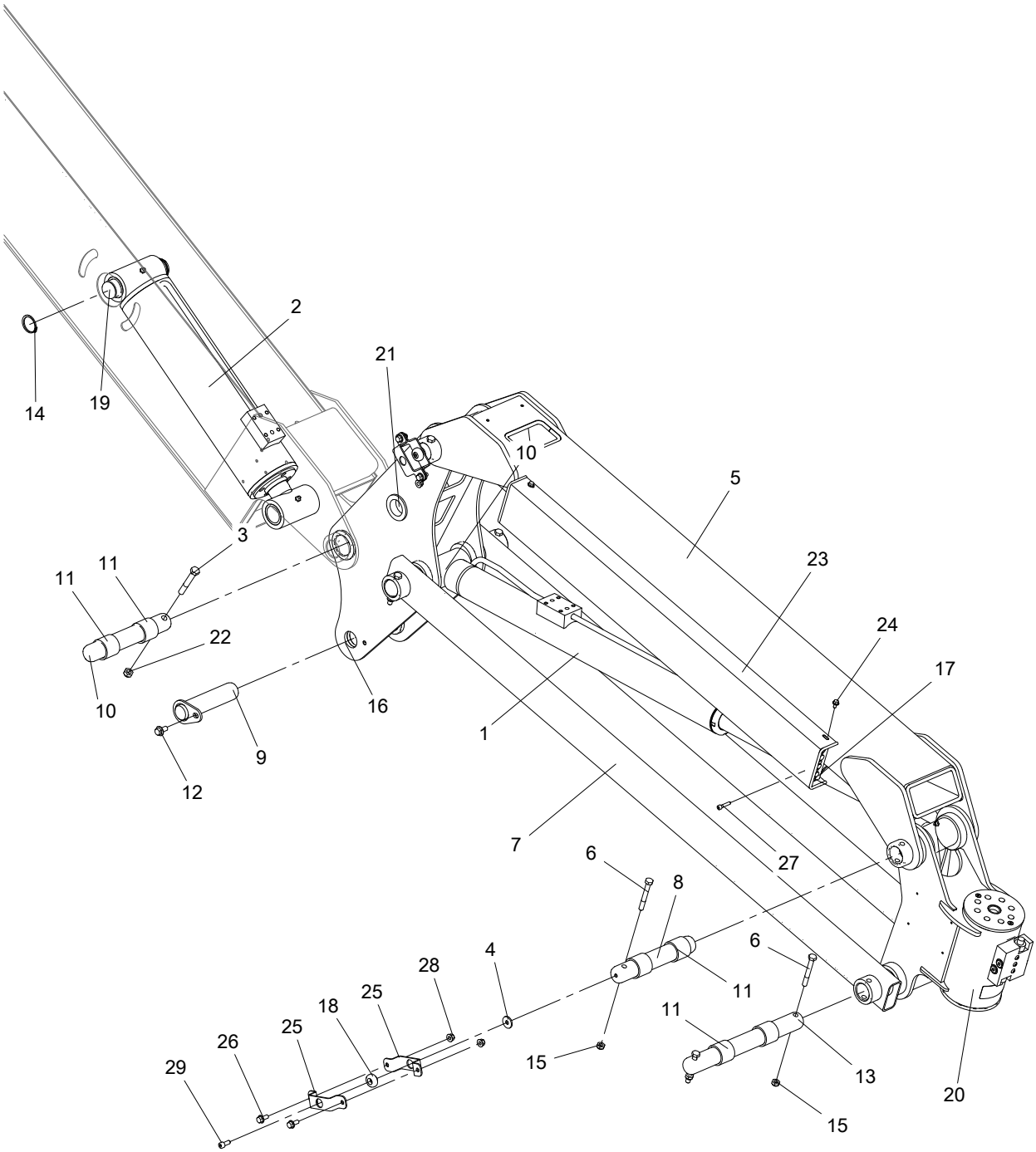

No.	Part No.	Qty.	Description
1	105025013249	1	Lift cylinder, jib(A)
1a-1	207990003063	1	Seal kit, cylinder(1000148)
1a-2	207990003153	1	Seal kit, cylinder(1000145)
1a-3	207990003127	1	Seal kit，cylinder(1000026)
2	105025013315	1	Level cylinder, upper
2a-1	207990003061	1	Seal kit, cylinder(1000148,A)
2a-2	207990003124	1	Seal kit，cylinder(1000026,A)
2a-3	207990003160	1	Seal kit, cylinder(1000145,A)
2a-4	207990003328	1	Seal kit, cylinder(1000148,B)
3	215010000015	1	Bolt M12×80-8.8-ZnD GB/T 5782
4	215040000103	2	Washer 8-100HV-ZnD GB/T 5287
5	105026013291	1	Boom tube
6	215010000012	6	Bolt M10×80-8.8-ZnD GB/T 5782
7	105026013288	2	Level arm
8	105026013276	2	Pin XGΦ40-235
9	105026013279	1	Pin assembly Φ40-160
10	105025013094	1	Pin XGΦ40-250
11	214030000053	10	Bearing, self-lubricating
12	215010000237	1	Bolt M10×20-8.8-ZnD GB/T 5789
13	105026013277	2	Pin XGΦ40-355
14	215040000097	2	Retaining ring 40-DKL JB/ZQ 4342
15	215030000027	6	Nut M10-8-ZnD GB/T 6184
16	105026013289	1	Pivot
17	105050013079	2	Clamp
18	112001013052	2	Plate, bending
19	105025013099	1	Pin XGΦ40-180
20	202020003009	1	Rotator(A)
20a	207990003068	1	Seal kit, cylinder
21	102004030245	1	Rubber grommet
22	215030000029	1	Nut M12-8-ZnD GB/T 6184
23	105071013732	1	Hose cover
24	215010000281	4	Bolt M6×12-8.8-ZnD GB/T 5789
25	112001013051	4	Plate, bending
26	215010000234	4	Bolt M8×20-8.8-ZnD GB/T 5789
27	215020000014	4	Screw M6×30-A2-70 GB/T 70.1
28	215030000108	4	Nut M8-8-ZnD GB/T 6183
29	215020000023	2	Screw M8×20-8.8-ZnD GB/T 70.1

4 PLATFORM COMPONENTS

4.1 PLATFORM COMPONENTS(SMALL-SIZED)

4.1.1 PLATFORM SUPPORT INSTALLATION(SMALL-SIZED)

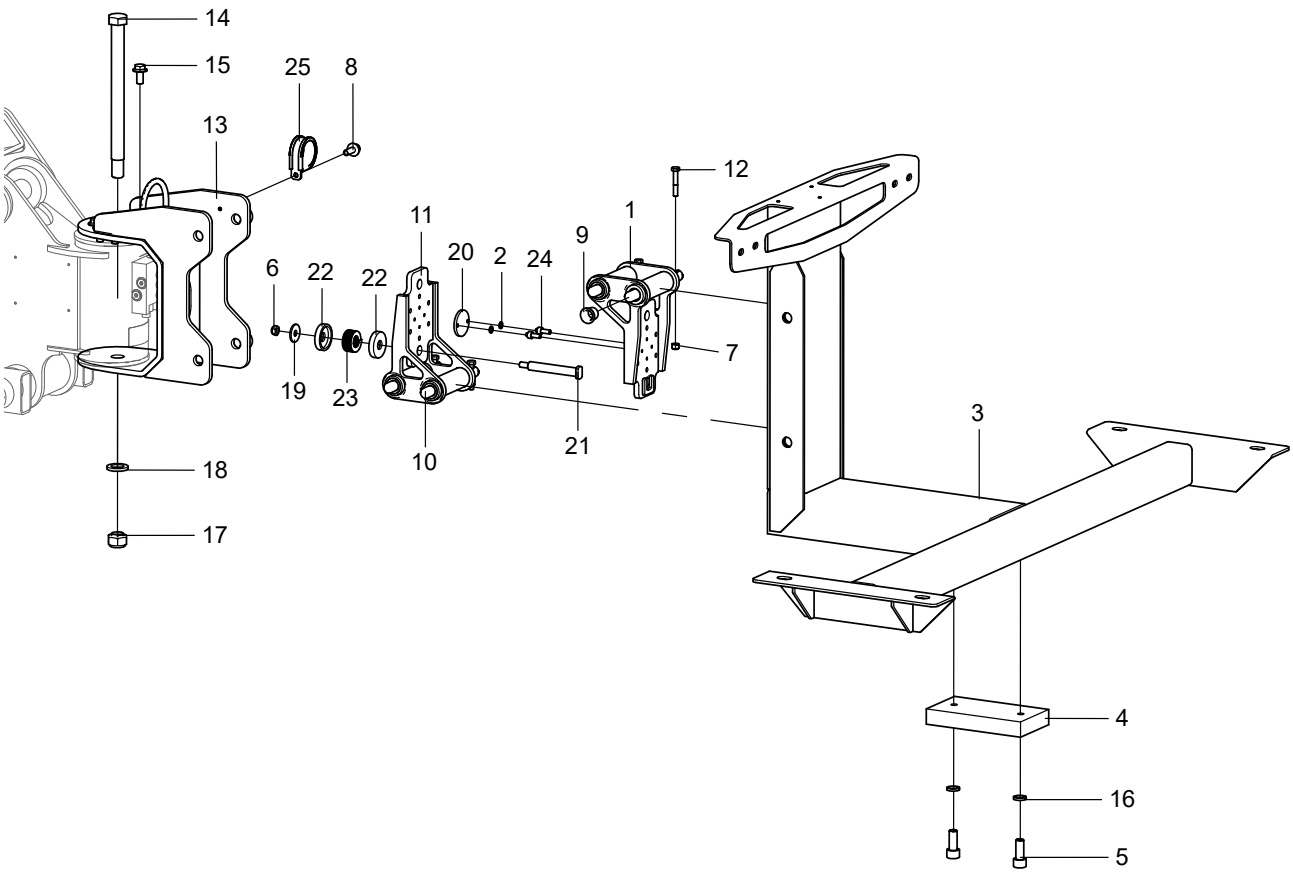

No.	Part No.	Qty.	Description
1	105029013046	1	Load support
2	215040000003	2	Washer 5-A2-70 GB/T 93
3	105001040002	1	Bracket
4	105001040006	1	Pad
5	215020000049	2	Screw M10×25-8.8-ZnD GB/T 70.1
6	215030000027	1	Nut M10-8-ZnD GB/T 6184
7	215030000026	4	Nut M8-8-ZnD GB/T889.1
8	215010000230	1	Bolt M6×16-8.8-ZnD GB/T 5789
9	214080000001	8	Bearing 20×23×21.5 SF-1F
10	105001040034	4	Pin XGΦ20-195
11	105029013046	1	Load support
12	215010000163	4	Bolt M8×50-8.8-ZnD GB/T 5782
13	105026013303	1	Bracket
14	105026013305	1	Clevis pin XJΦ24-302
15	215010000262	8	Bolt M12×25-10.9 DKL GB/T 5789
16	215040000006	2	Washer 10-ZnD GB/T 93

No.	Part No.	Qty.	Description
17	215030000104	1	Nut M22-8-ZnD GB/T 6184
18	215040000108	1	Washer 22-DKL GB/T 1230
19	215040000125	1	Washer 10-100HV-ZnD GB/T 5287
20	103006060038	1	Support plate
21	105029013067	1	Screw, self-build
22	105029013045	2	Retaining ring
23	210110000001	1	Spring, compression
24	215020000006	2	Screw M5×12-A2-70 GB/T 70.1
25	216020000025	1	Retaning ring, SSG

4.1.2 PLATFORM INSTALLATION(SMALL-SIZED)

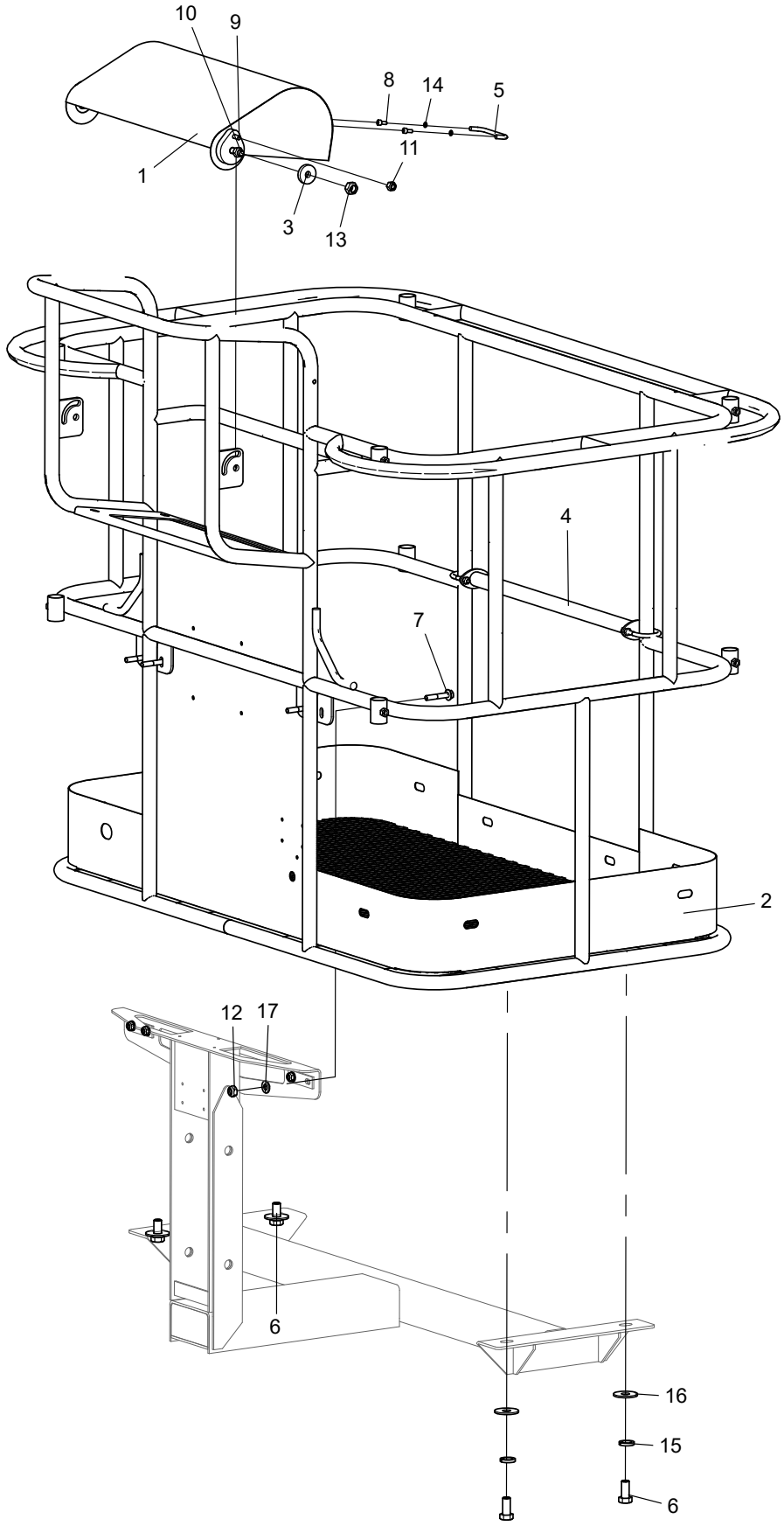

No.	Part No.	Qty.	Description
1	105001040029	1	Dust cover
2	105001040039	1	The action bar
3	105001040055	2	Plate
4	105064043183	1	Bar, drop
5	209030000001	1	Handle, C.C.96mm
6	215010000109	4	Bolt M16×35-8.8-ZnD GB/T 5783
7	215010000258	4	Bolt M10×55-8.8-ZnD GB/T 5789
8	215020000001	2	Screw M4×10-A2-70 GB/T 70.1
9	215020000024	2	Screw M8×25-8.8-ZnD GB/T 70.1
10	215020000208	2	Screw M12×40-8.8-ZnD GB/T 70.1
11	215030000026	2	Nut M8-8-ZnD GB/T889.1
12	215030000027	4	Nut M10-8-ZnD GB/T 6184
13	215030000029	4	Nut M12-8-ZnD GB/T 6184
14	215040000002	2	Washer 4-A2-70 GB/T 93
15	215040000008	4	Washer 16-ZnD GB/T 93
16	215040000020	4	Washer 16-200HV-ZnD GB/T 96.1
17	215040000035	4	Washer 10-200HV-ZnD GB/T 97.1

4.2 PLATFORM COMPONENTS(MIDDLE-SIZED)

 © Apr 2022

4.2.1 PLATFORM SUPPORT INSTALLATION(MIDDLE-SIZED)

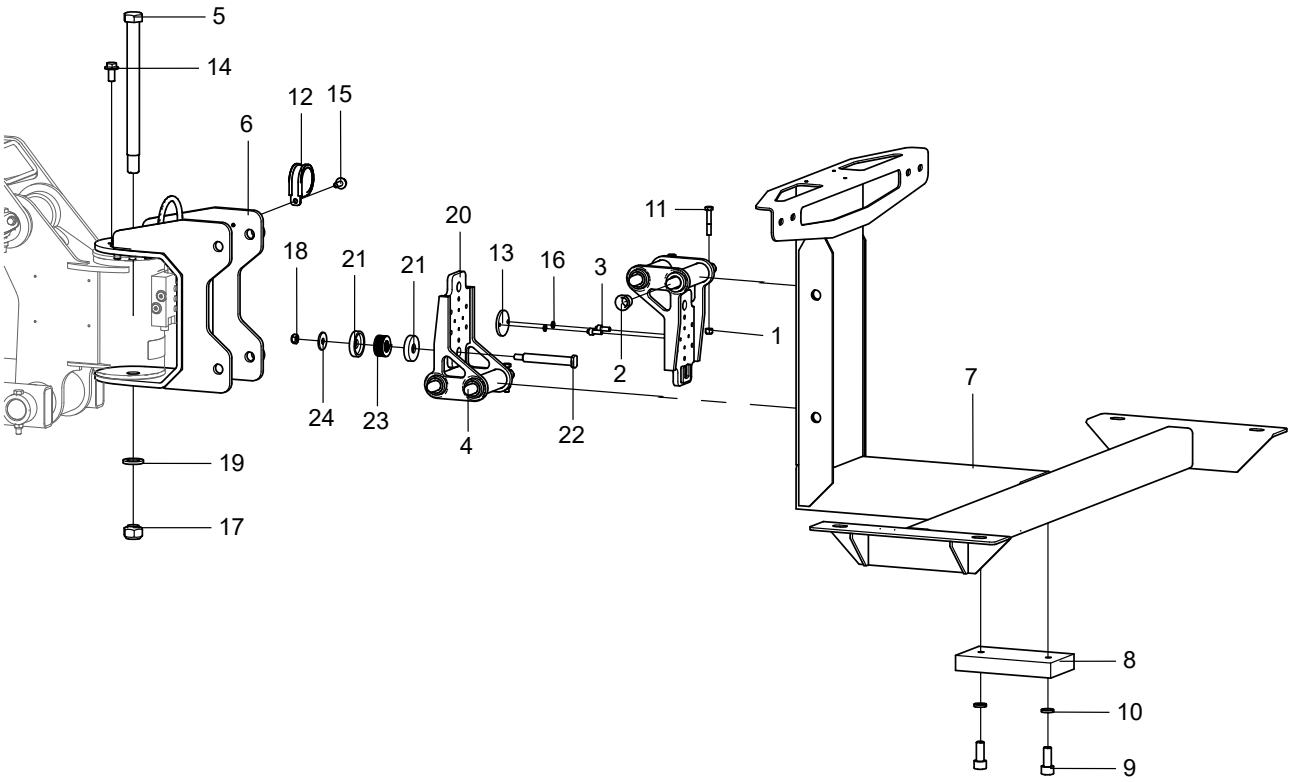

No.	Part No.	Qty.	Description
1	215030000026	4	Nut M8-8-ZnD GB/T889.1
2	214080000001	8	Bearing 20×23×21.5 SF-1F
3	215020000006	2	Screw M5×12-A2-70 GB/T 70.1
4	105001040034	4	Pin XGΦ20-195
5	105026013305	1	Clevis pin XJΦ24-302
6	105026013303	1	Bracket
7	105001040002	1	Bracket
8	105001040006	1	Pad
9	215020000049	2	Screw M10×25-8.8-ZnD GB/T 70.1
10	215040000006	2	Washer 10-ZnD GB/T 93
11	215010000163	4	Bolt M8×50-8.8-ZnD GB/T 5782
12	216020000025	1	Retaning ring, SSG
13	103006060038	1	Support plate
14	215010000262	8	Bolt M12×25-10.9 DKL GB/T 5789
15	215010000230	1	Bolt M6×16-8.8-ZnD GB/T 5789
16	215040000003	2	Washer 5-A2-70 GB/T 93

No.	Part No.	Qty.	Description
17	215030000104	1	Nut M22-8-ZnD GB/T 6184
18	215030000027	1	Nut M10-8-ZnD GB/T 6184
19	215040000108	1	Washer 22-DKL GB/T 1230
20	105029013046	2	Load support
21	105029013045	2	Retaining ring
22	105029013067	1	Screw, self-build
23	210110000001	1	Spring, compression
24	215040000125	1	Washer 10-100HV-ZnD GB/T 5287

4.2.2 PLATFORM INSTALLATION(MIDDLE-SIZED)

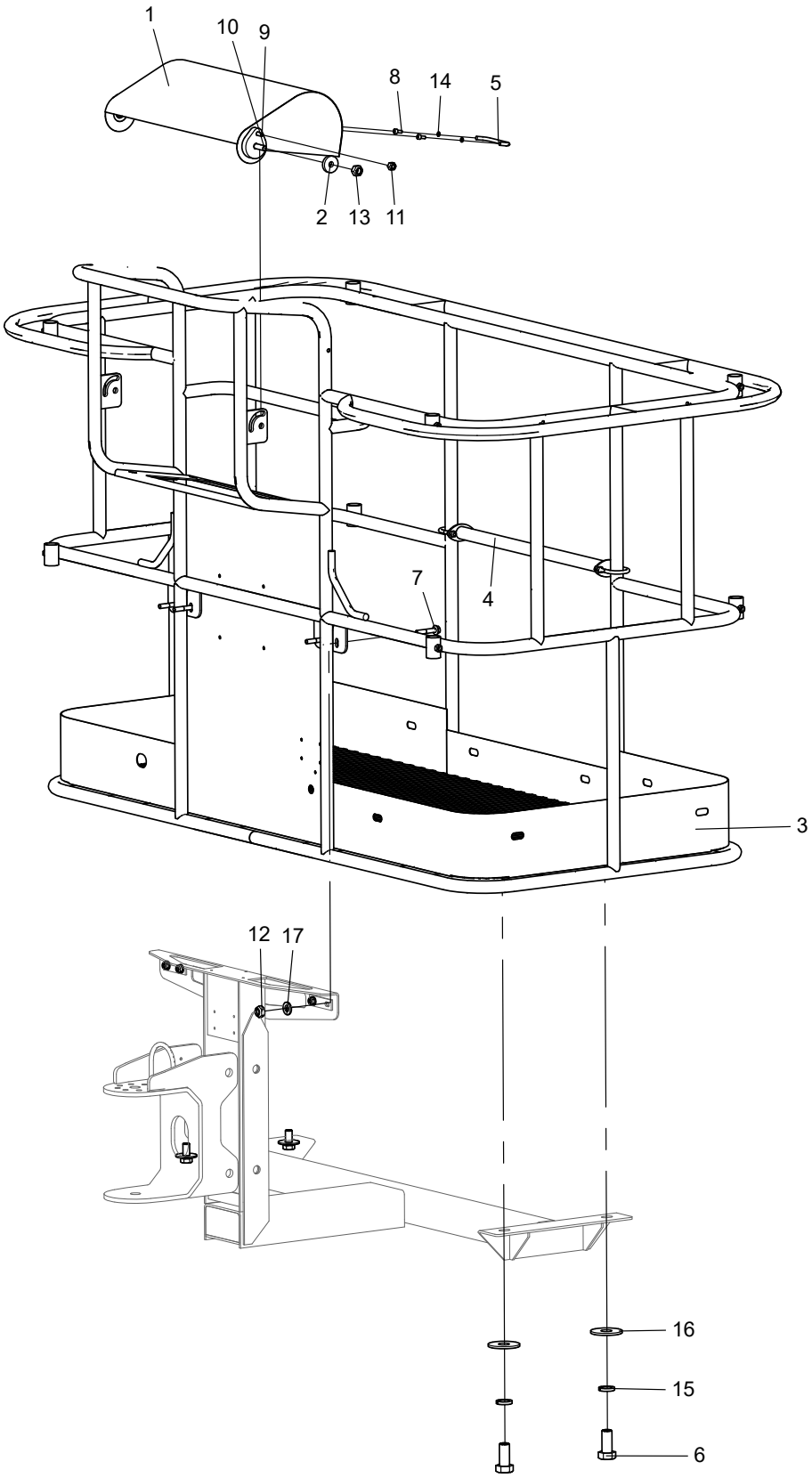

No.	Part No.	Qty.	Description
1	105001040029	1	Dust cover
2	105001040055	2	Plate
3	105021040007	1	The action bar
4	105064043183	1	Bar, drop
5	209030000001	1	Handle, C.C.96mm
6	215010000109	4	Bolt M16×35-8.8-ZnD GB/T 5783
7	215010000258	4	Bolt M10×55-8.8-ZnD GB/T 5789
8	215020000001	2	Screw M4×10-A2-70 GB/T 70.1
9	215020000024	2	Screw M8×25-8.8-ZnD GB/T 70.1
10	215020000208	2	Screw M12×40-8.8-ZnD GB/T 70.1
11	215030000026	2	Nut M8-8-ZnD GB/T889.1
12	215030000027	4	Nut M10-8-ZnD GB/T 6184
13	215030000029	2	Nut M12-8-ZnD GB/T 6184
14	215040000002	2	Washer 4-A2-70 GB/T 93
15	215040000008	4	Washer 16-ZnD GB/T 93
16	215040000020	4	Washer 16-200HV-ZnD GB/T 96.1
17	215040000035	4	Washer 10-200HV-ZnD GB/T 97.1

4.3 PLATFORM COMPONENTS(BIG-SIZED)

4.3.1 PLATFORM SUPPORT INSTALLATION(BIG-SIZED)

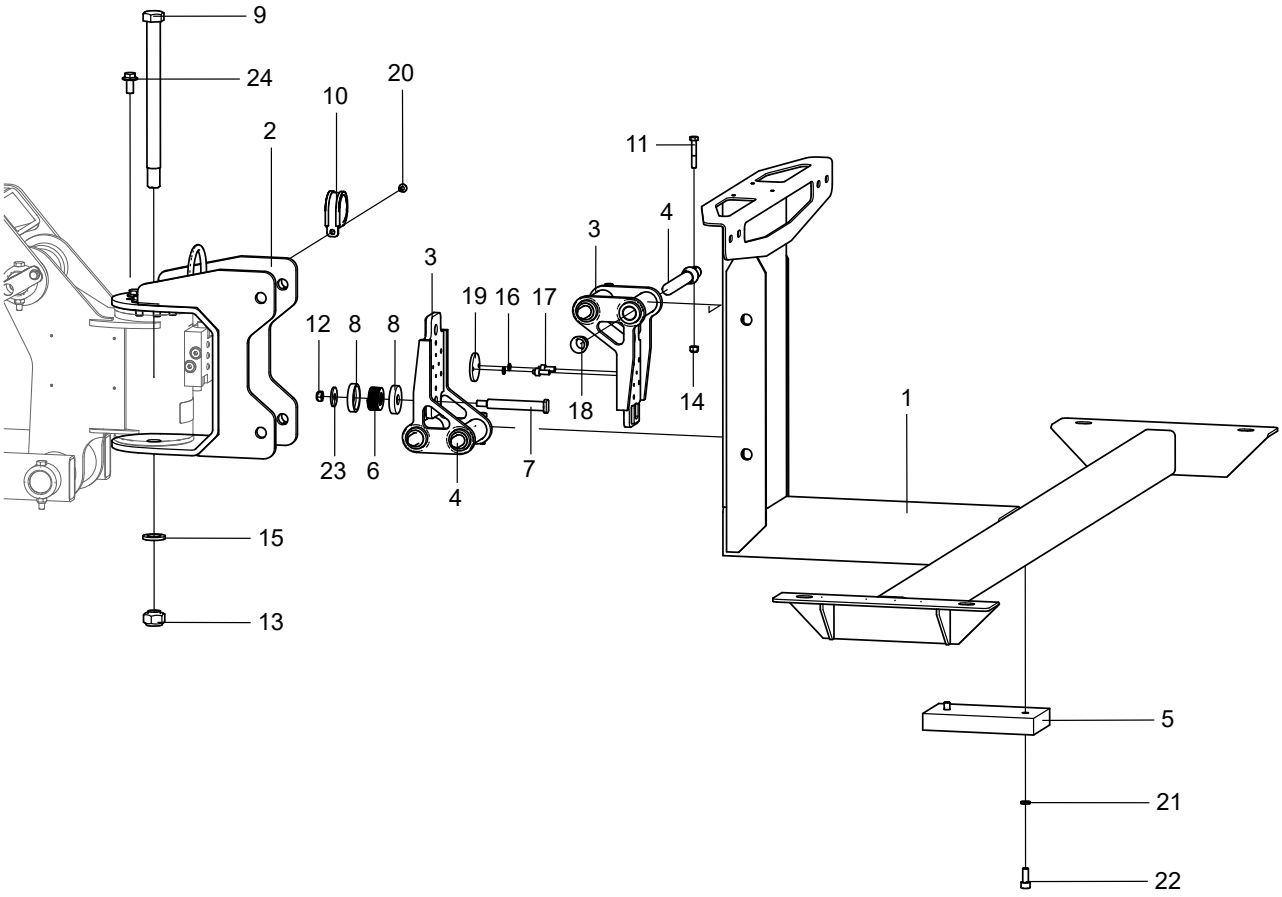

No.	Part No.	Qty.	Description
1	105003040008	1	Bracket
2	105026013303	1	Bracket
3	105029013046	2	Load support
4	105001040034	4	Pin XGΦ20-195
5	105001040006	1	Pad
6	210110000001	1	Spring, compression
7	105029013067	1	Screw, self-build
8	105029013045	2	Retaining ring
9	105026013305	1	Clevis pin XJΦ24-302
10	216020000025	1	Retaning ring, SSG
11	215010000163	4	Bolt M8×50-8.8-ZnD GB/T 5782
12	215030000027	1	Nut M10-8-ZnD GB/T 6184
13	215030000104	1	Nut M22-8-ZnD GB/T 6184
14	215030000026	4	Nut M8-8-ZnD GB/T889.1
15	215040000108	1	Washer 22-DKL GB/T 1230
16	215040000003	2	Washer 5-A2-70 GB/T 93

No.	Part No.	Qty.	Description
17	215020000006	2	Screw M5×12-A2-70 GB/T 70.1
18	214080000001	8	Bearing 20×23×21.5 SF-1F
19	103006060038	1	Support plate
20	215010000230	1	Bolt M6×16-8.8-ZnD GB/T 5789
21	215040000006	2	Washer 10-ZnD GB/T 93
22	215020000049	2	Screw M10×25-8.8-ZnD GB/T 70.1
23	215040000125	1	Washer 10-100HV-ZnD GB/T 5287
24	215010000262	8	Bolt M12×25-10.9 DKL GB/T 5789

4.3.2 PLATFORM INSTALLATION(BIG-SIZED)

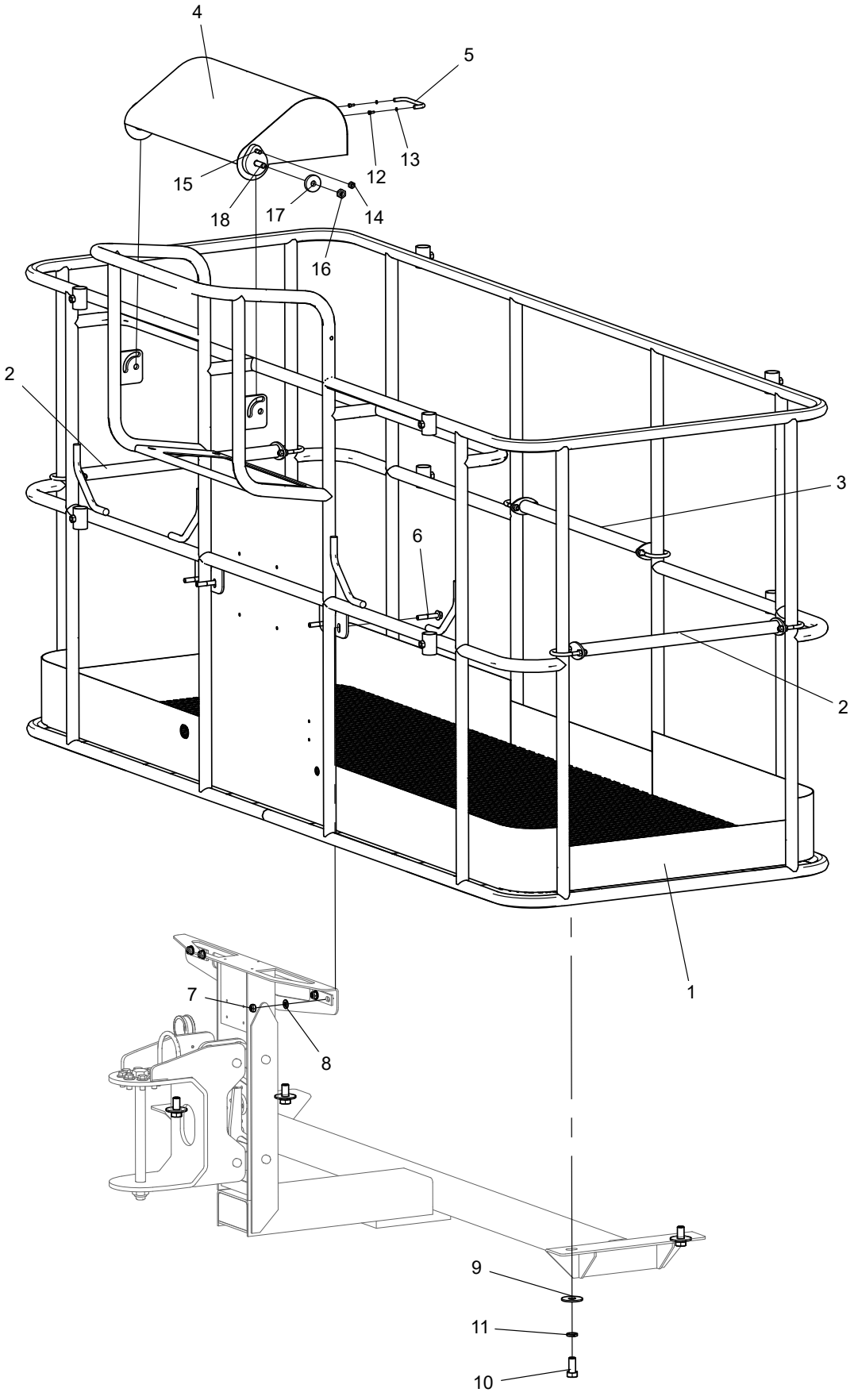

No.	Part No.	Qty.	Description
1	105051043019	1	The action bar
2	105064043168	2	Bar, drop
3	105064043183	1	Bar, drop
4	105001040029	1	Dust cover
5	209030000001	1	Handle, C.C.96mm
6	215010000258	4	Bolt M10×55-8.8-ZnD GB/T 5789
7	215030000027	4	Nut M10-8-ZnD GB/T 6184
8	215040000035	4	Washer 10-200HV-ZnD GB/T 97.1
9	215040000020	4	Washer 16-200HV-ZnD GB/T 96.1
10	215010000109	4	Bolt M16×35-8.8-ZnD GB/T 5783
11	215040000008	4	Washer 16-ZnD GB/T 93
12	215020000001	2	Screw M4×10-A2-70 GB/T 70.1
13	215040000002	2	Washer 4-A2-70 GB/T 93
14	215030000005	2	Nut M8-8-ZnD GB/T 6170
15	215020000024	2	Screw M8×25-8.8-ZnD GB/T 70.1
16	215030000029	1	Nut M12-8-ZnD GB/T 6184
17	105001040055	2	Plate
18	215020000208	2	Screw M12×40-8.8-ZnD GB/T 70.1

5 HYDRAULIC SYSTEM

5.1 CHASSIS HYDRAULIC COMPONENTS INSTALLATION

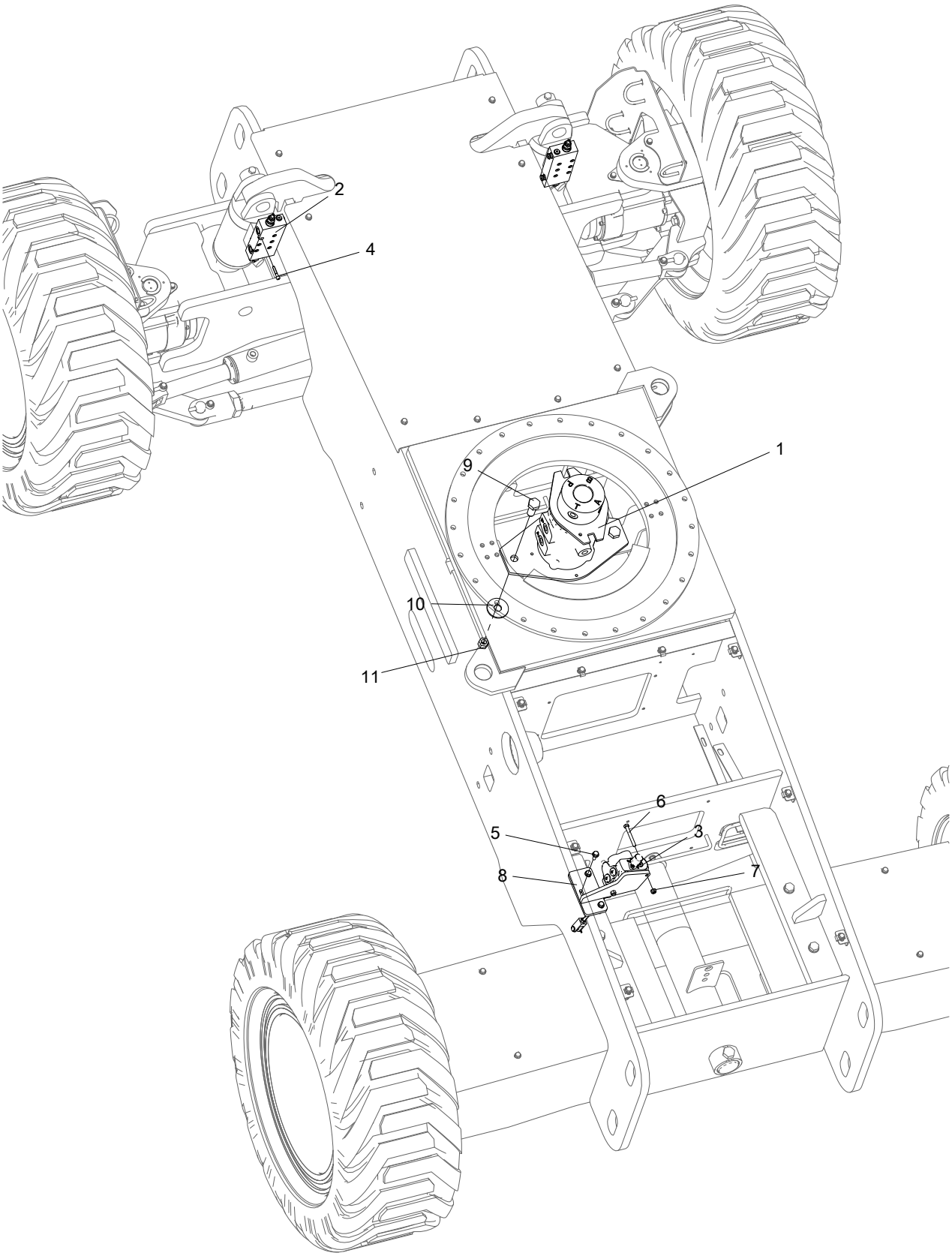

No.	Part No.	Qty.	Description
1	202100003004	1	Hydraulic rotary coupler(A)
1a	207990003067	1	Seal kit, Hydraulic rotary coupler
2	202040003032	2	Oscillate counterbalance valve(See Details)
3	202040003026	1	Oscillate multi-way valve(See Details)
4	215020000015	12	Screw M6×35-A2-70 GB/T 70.1
5	215010000235	3	Bolt M8×25-8.8-ZnD GB/T 5789
6	215010000066	2	Bolt M8×65-8.8-ZnD GB/T 5783
7	215030000026	2	Nut M8-8-ZnD GB/T889.1
8	112001053153	1	Bracket, oscilalte multi-way valve
9	215010000125	2	Bolt M20×50-10.9-DKL GB/T 5783
10	215040000022	2	Washer 20-200HV-ZnD GB/T 96.1
11	215030000098	2	Nut M20-8-ZnD GB/T 6184

5.2 CHASSIS HOSE SUPPORT AND CYLINDER JACKET INSTALLATION

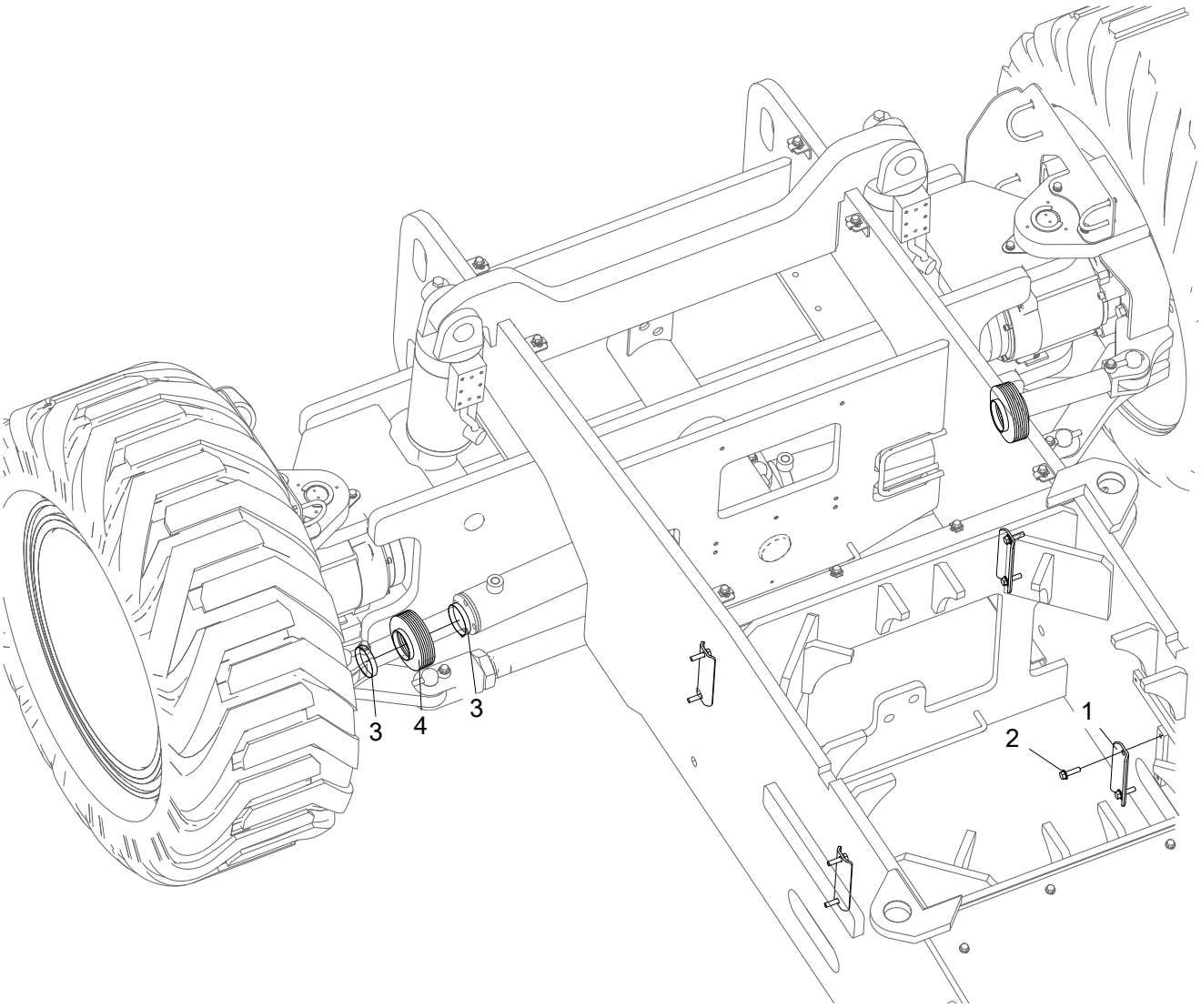

No.	Part No.	Qty.	Description
1	103003050039	4	Bracket
2	215010000236	8	Bolt M8×30-8.8-ZnD GB/T 5789
3	216020000007	4	Clamp, non-perforated, DIN
4	104008050012	2	Rod jacket, level cylinder

5.3 OSCILLATE COUNTERBALANCE VALVE(PN.202040003032)

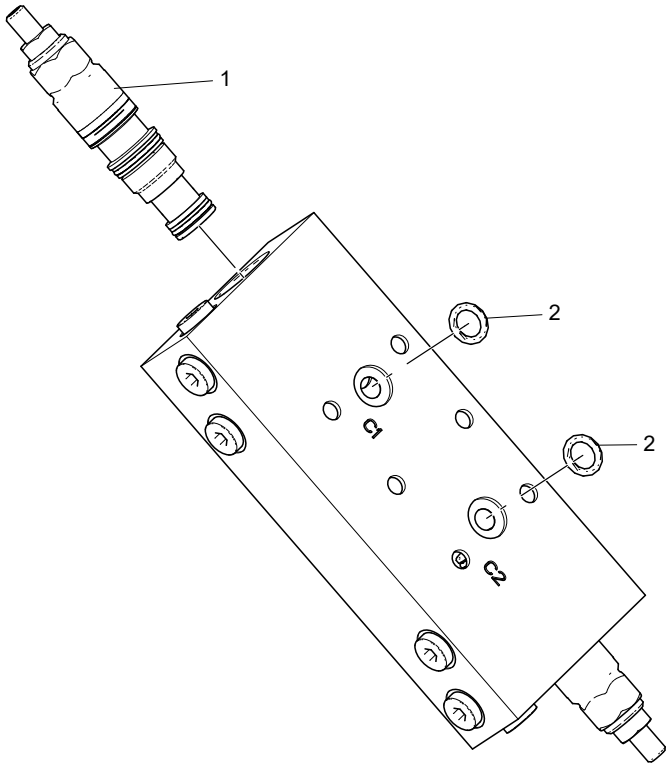

No.	Part No.	Qty.	Description
1	202040003216	2	Spool
2	207040003003	2	O-ring

5.4 OSCILLATE MULTI-WAY VALVE(PN.202040003026)

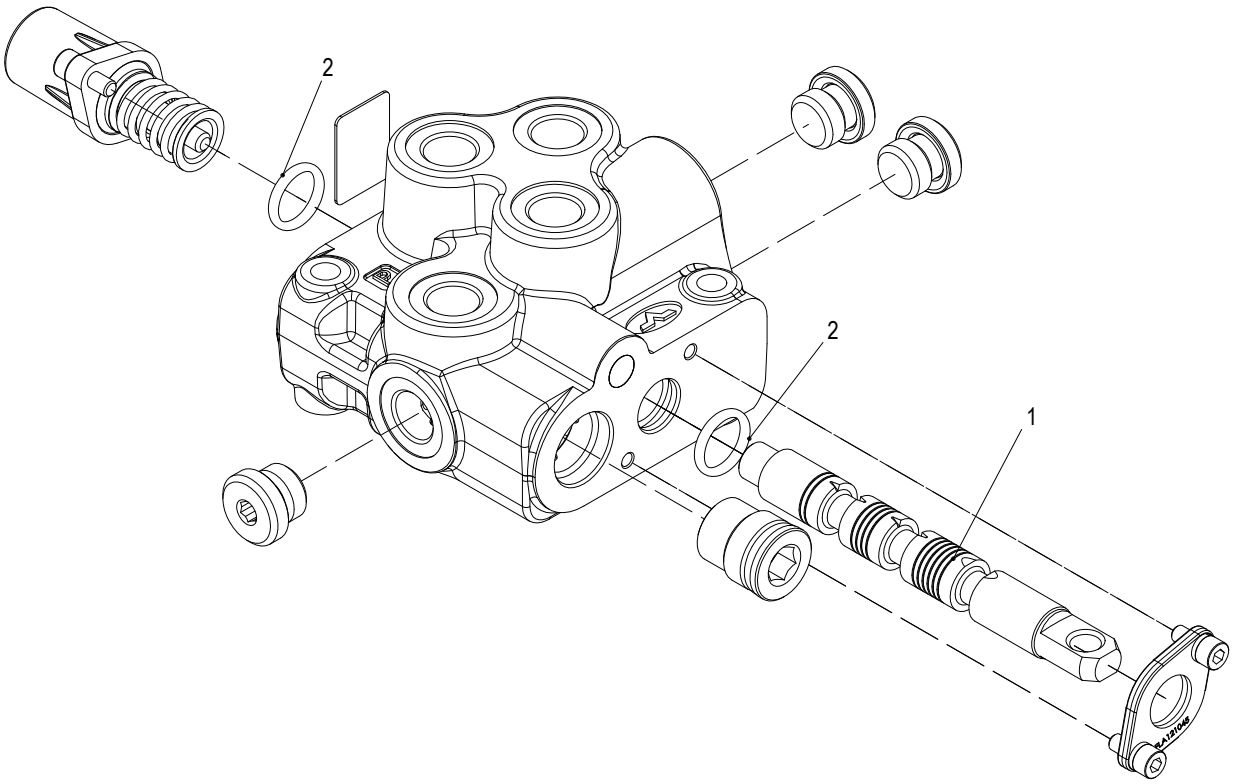

No.	Part No.	Qty.	Description
1	202990003065	1	Multi-way valve spool, oscillate
2	207060003007	2	O-ring

5.5 TURNTABLE HYDRAULIC COMPONENTS INSTALLATION

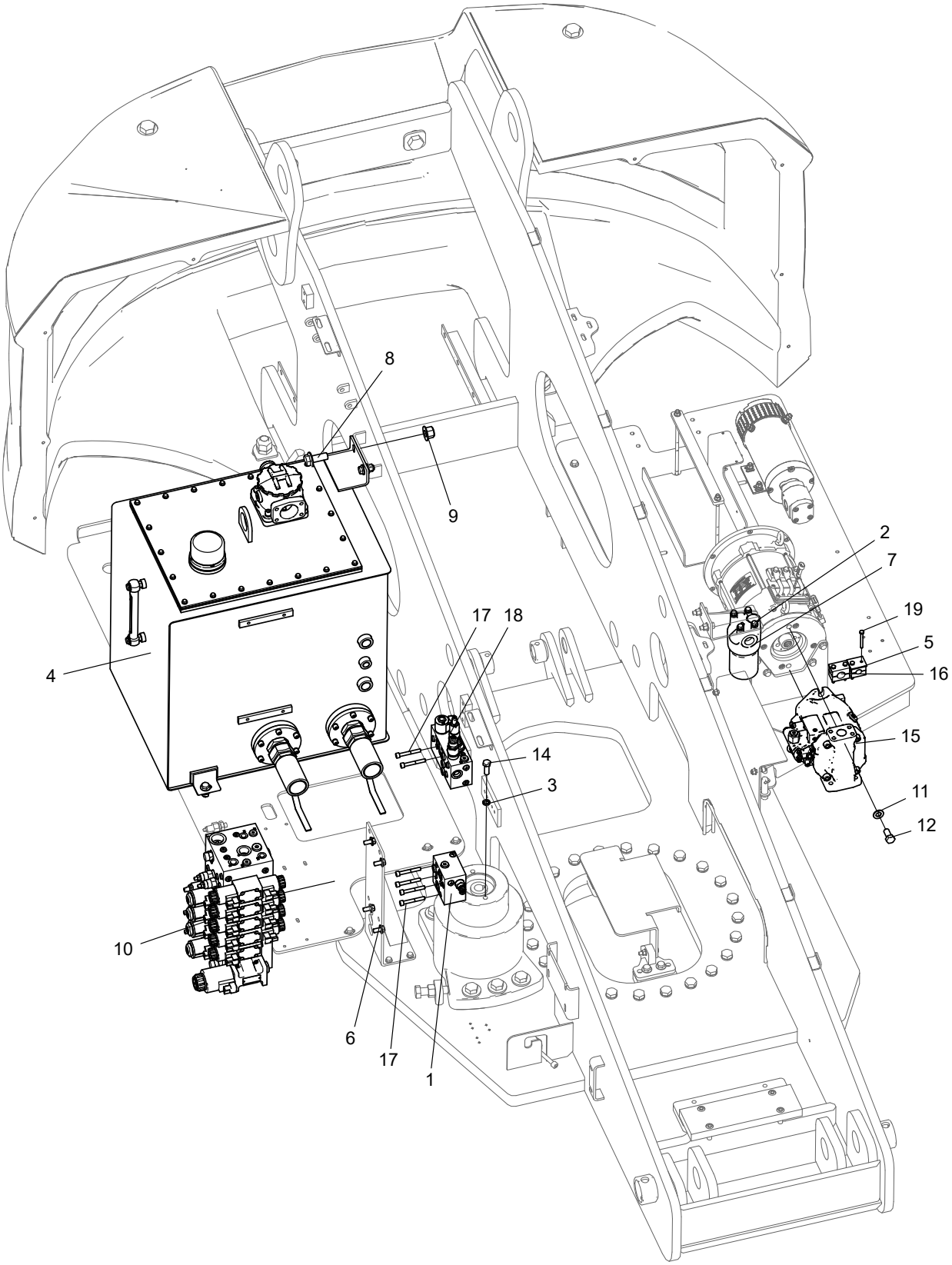

No.	Part No.	Qty.	Description
1	202040003061	1	Rotary Cushion Valve
2	215010000234	4	Bolt M8×20-8.8-ZnD GB/T 5789
3	215040000007	2	Washer 12-ZnD GB/T 93
4	105025023414	1	Hydraulic tank assembly
5	216010003013	1	Clamp
6	215010000237	4	Bolt M10×20-8.8-ZnD GB/T 5789
7	202080000046	1	High pressure filter
7a	202080000048	1	Filter element
8	215010000243	4	Bolt M12×30-8.8-ZnD GB/T 5789
9	215030000110	4	Nut M12-8-ZnD GB/T 6183
10	202040003176	1	Boom function manifold
11	215040000119	2	Washer 14-200HV-ZnD GB/T 97.1
12	215010000184	2	Bolt M14×30-8.8 GB/T 5783
13	202020000005	1	Cycloid motor
14	215010000092	2	Bolt M12×35-8.8-ZnD GB/T 5783
15	202010000055	1	Pump, open-circuit, variable displacement
15a	207990003119	1	Seal kit, open-circuit pump
16	216010000017	1	Clamp
17	215020000038	6	Screw M8×60-8.8-ZnD GB/T 70.1
18	202040003039	1	Oscillate control vlave
19	215010000205	4	Bolt M6×55-A2-70 GB/T5783

5.6 HYDRAULIC TANK ASSEMBLY(PN.105025023414)

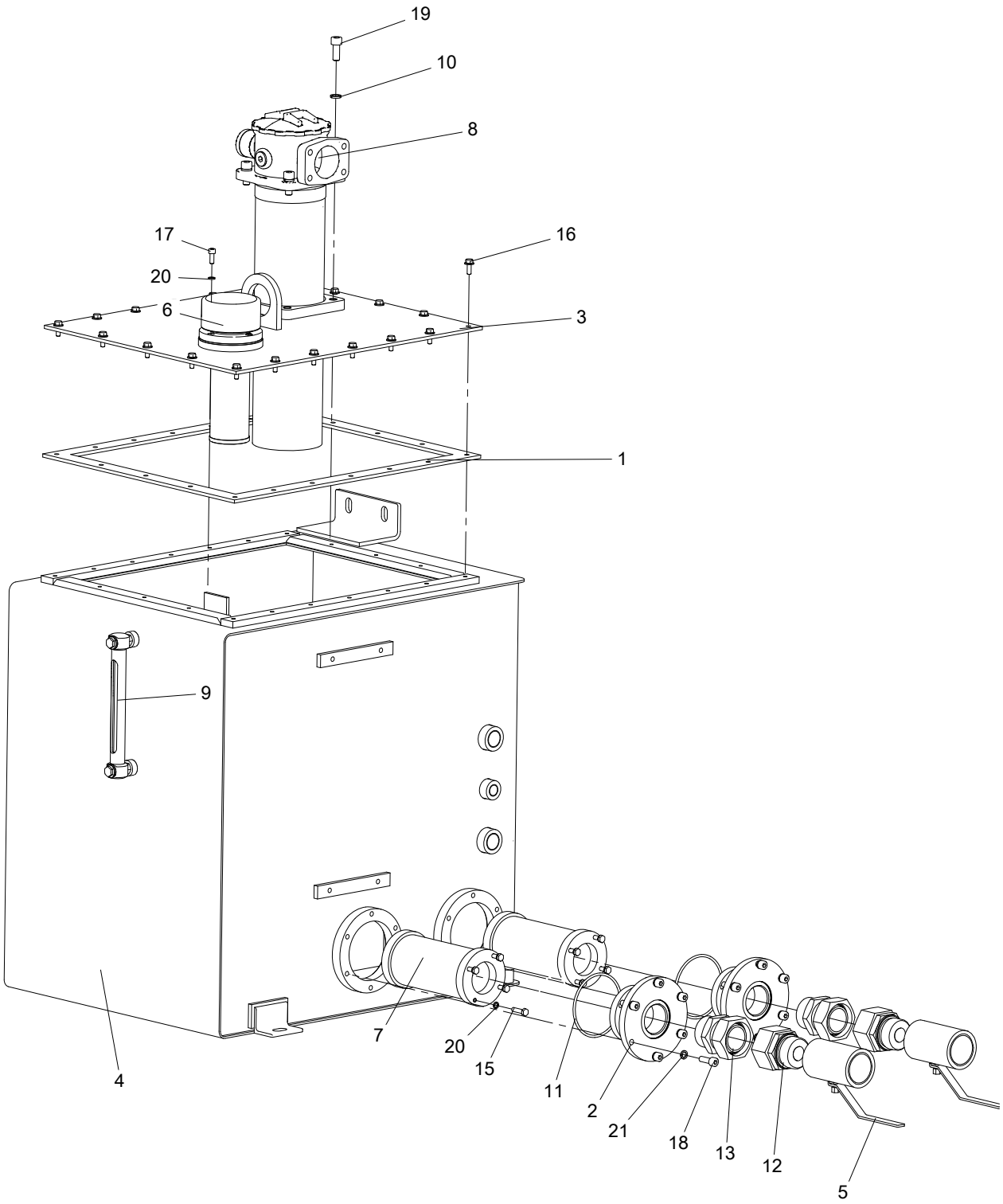

No.	Part No.	Qty.	Description
1	105001020021	1	Gasket, rubber
2	105001020024	2	Flange
3	105025023415	1	Cover
4	105025023417	1	Housing
5	202040000017	2	Valve
6	202070003014	1	Air filter
6a	202070003015	1	Filter element
7	202080000004	2	Suction filter
8	202080000005	1	Return filter
8a	202080003012	1	Filter element
9	202120000004	1	Liquid level indicator
10	215040000007	4	Washer 12-ZnD GB/T 93
11	207040003004	2	O-ring
12	213010000058	2	Fitting
13	213010000059	2	Fitting
14	213060000006	1	Plug
15	215010000052	8	Bolt M6×25-A2-70 GB/T 5783
16	215010000230	20	Bolt M6×16-8.8-ZnD GB/T 5789
17	215020000011	4	Screw M6×16-A2-70 GB/T 70.1
18	215020000024	12	Screw M8×25-8.8-ZnD GB/T 70.1
19	215020000072	4	Screw M12×25-8.8-ZnD GB/T 70.1
20	215040000004	12	Washer 6-A2-70 GB/T 93
21	215040000005	12	Washer 8-ZnD GB/T 93

5.7 CYCLOID MOTOR(PN.202020000005)

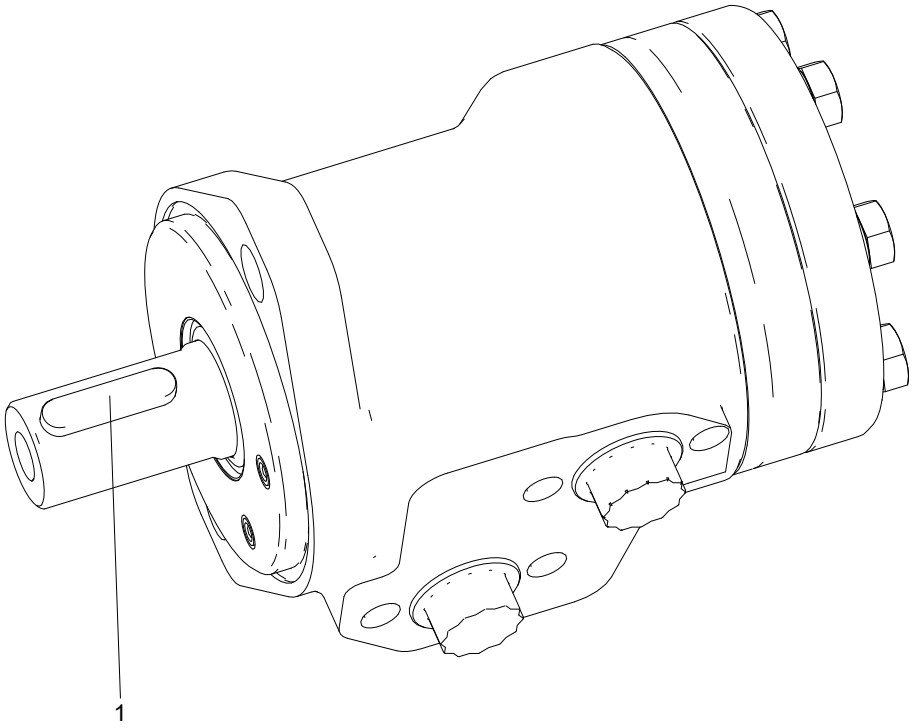

No.	Part No.	Qty.	Description
1	204200003000	1	Flat key

5.8 BOOM FUNCTION MANIFOLD (PN.202040003176)

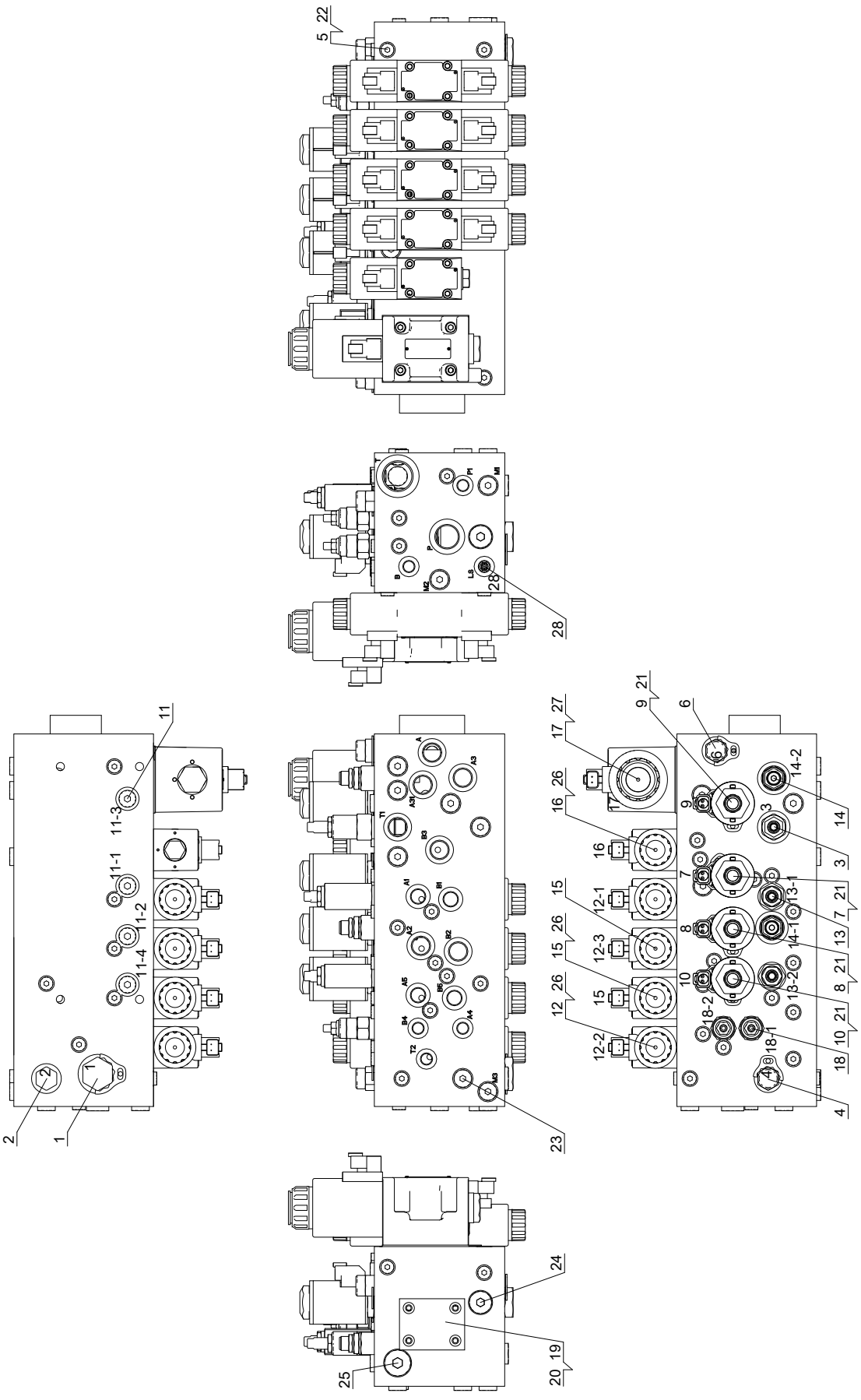

No.	Part No.	Qty.	Description
1	202990003146	1	Check Valves
2	202990003071	1	Check valve
3	202040003205	1	Relief valve
4	202990003147	1	Compensator valve
5	202130000008	1	Damper plug
6	202040003206	1	Flow valve
7	202990000009	1	Spool
8、9	202990000007	2	Spool
10	202990000005	1	Spool
11	202040000410	4	Check valve
12	202990003148	3	Solenoid directional valve
13	202040003151	2	Relief valve
14	202990000011	2	Spool
15	202990003170	1	Solenoid directional valve
16	202990003149	1	Solenoid directional valve
17	202990003150	1	Solenoid directional valve
18	202040003207	2	Spool
18	202990000038	4	Coil
28	202130003003	1	Damper

5.9 ROTARY CUSHION VALVE(PN.202040003061)

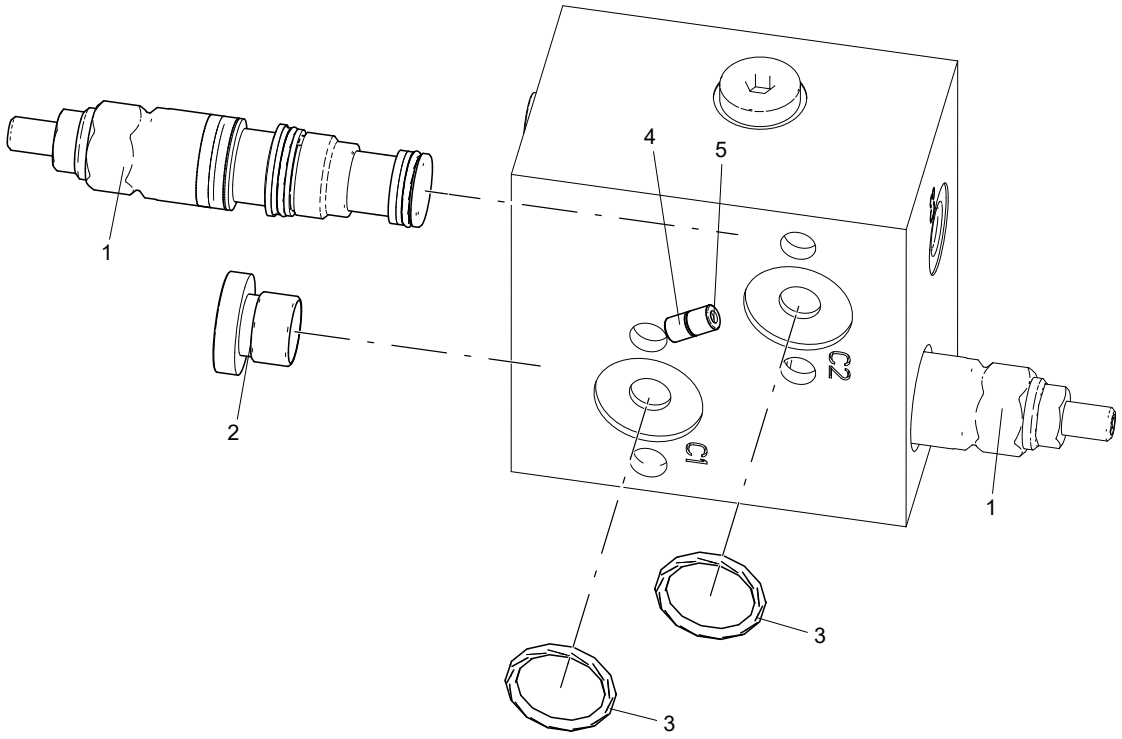

No.	Part No.	Qty.	Description
1	202990003036	2	Counterbalance valve spool
2	202990003063	1	Shuttle valve
3	207040003051	2	O-ring
4	202130003004	1	Damper
5	202130003003	1	Damper

5.10 BOOM MANIFOLD INSTALLATION

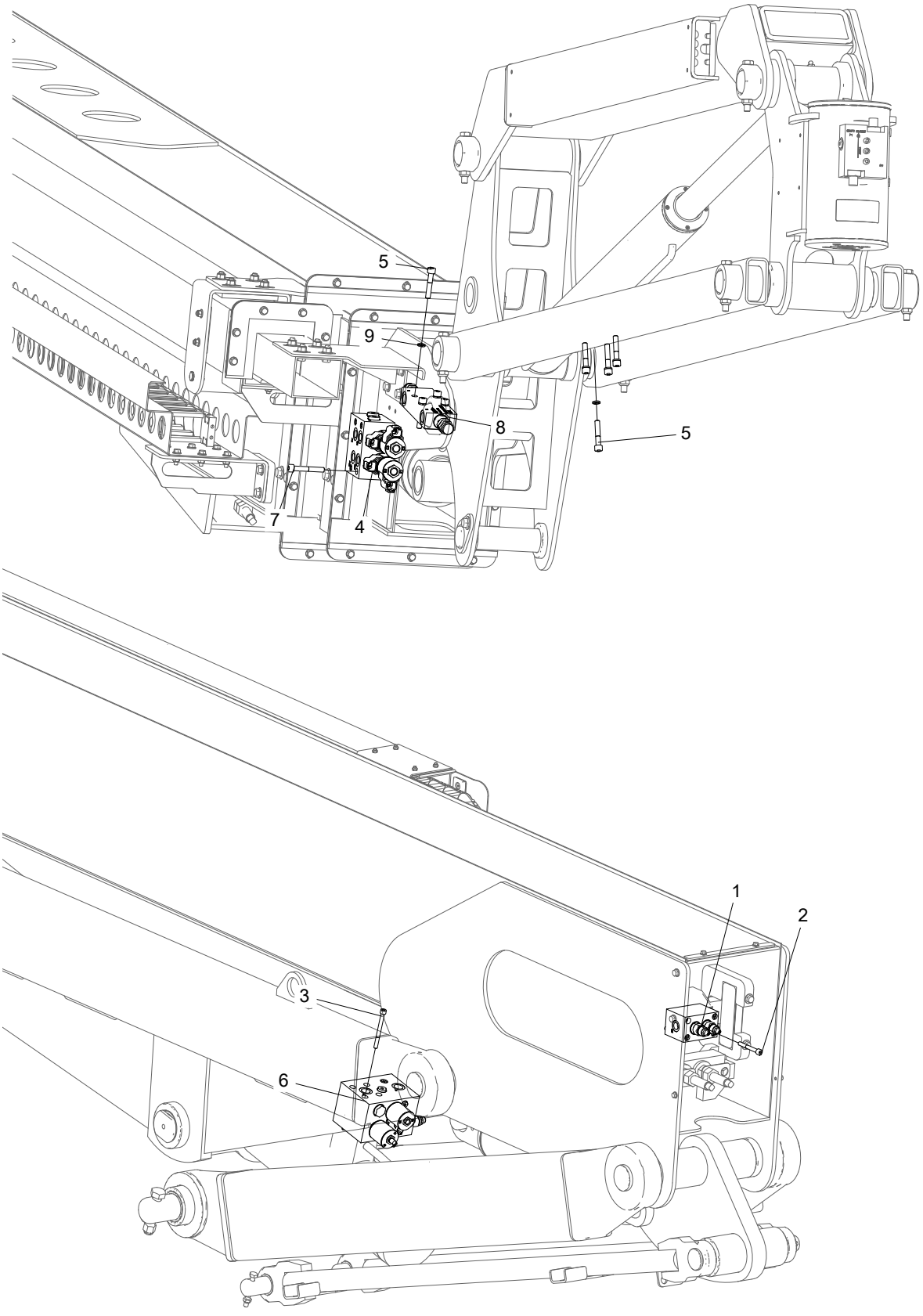

No.	Part No.	Qty.	Description
1	202040003126	1	Telescope counterbalance valve(See Details)
2	215020000042	4	Screw M8×70-10.9-DKL GB/T 70.1
3	215020000246	4	Screw M8×90-8.8-ZnD GB/T70.1
4	105030050004	1	Platform duplex manifold options
4-1	202040000329	1	Platform manifold, duplex(See Details)
4-2	202040003259	1	Platform manifold, duplex
5	215020000031	8	Screw M8×45-10.9-DKL GB/T 70.1
6	202040003227	1	Lift control valve(See Details)
7	215020000036	4	Screw M8×55-10.9-DKLGB/T 70.1
8	202040000011	2	Counterbalance valve, leveling(See Details)
9	215040000005	8	Washer 8-ZnD GB/T 93

5.11 BOOM HOSE CLAMPS AND CYLINDER JACKETS INSTALLATION

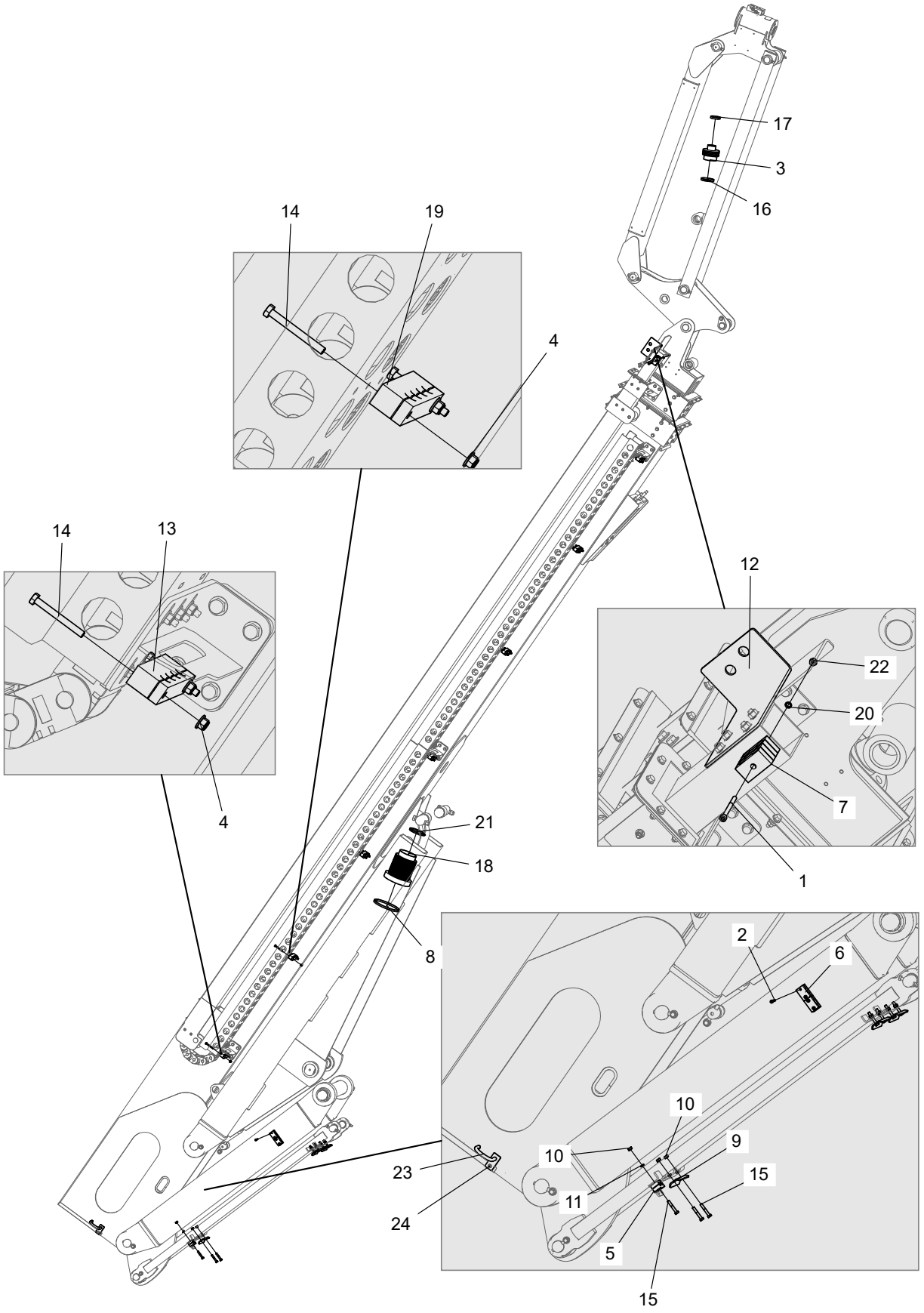

No.	Part No.	Qty.	Description
1	215020000288	1	Screw M6×70-A2-70 GB/T 70.1
2	215020000017	4	Screw M6×45-A2-70 GB/T 70.1
3	103005050008	1	Jacket, cylinder
4	215030000107	14	Nut M6-8-ZnD GB/T 6183
5	216010000012	1	Clamp
6	216010000017	2	Clamp
7	216010003001	2	Clamp
8	216020003010	1	Clamp
9	103003050039	3	Bracket
10	215030000005	7	Nut M8-8-ZnD GB/T 6170
11	215040000005	7	Washer 8-ZnD GB/T 93
12	105049013003	1	Plate, bending
13	105025053026	3	Clamp 1
14	215010000205	14	Bolt M6×55-A2-70 GB/T5783
15	215010000163	7	Bolt M8×50-8.8-ZnD GB/T 5782
16	216020000009	1	Clamp
17	216020000007	1	Clamp, non-perforated, DIN
18	105050053011	1	Rod jacket, lift cylinder
19	105025053025	4	Clamp 2
20	215040000004	1	Washer 6-A2-70 GB/T 93
21	216020000026	1	Clamp
22	215030000004	1	Nut M6-A2-70 GB/T 6170
23	104008050007	1	Hook
24	104008050008	1	Plate

5.12 TELESCOPING COUNTERBALANCE VALVE (PN.202040003126)

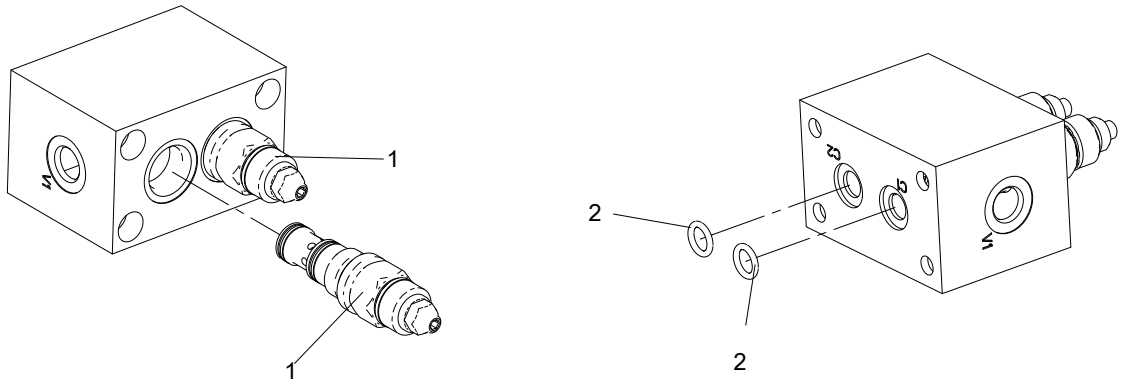

No.	Part No.	Qty.	Description
1	202990003097	2	Counterbalance valve spool
2	207060003005	2	O-ring

5.13 PLATFORM DUPLEX VALVE(PN.202040000329)

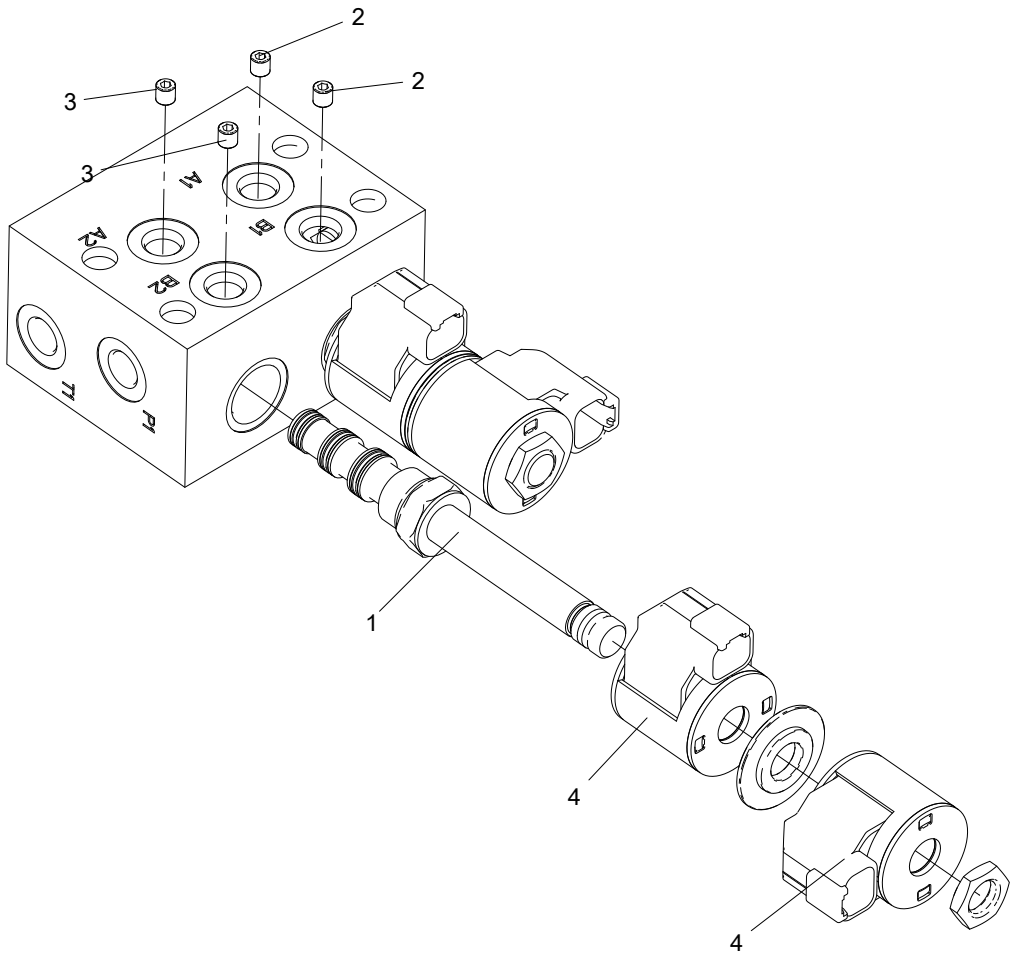

No.	Part No.	Qty.	Description
1	202040000399	2	Solenoid valve
2	202130000008	2	Damper plug
3	202130003005	2	Damper
4	202990000037	4	Coil

5.14 LIFTING CONTROL VALVE(PN.202040003227)

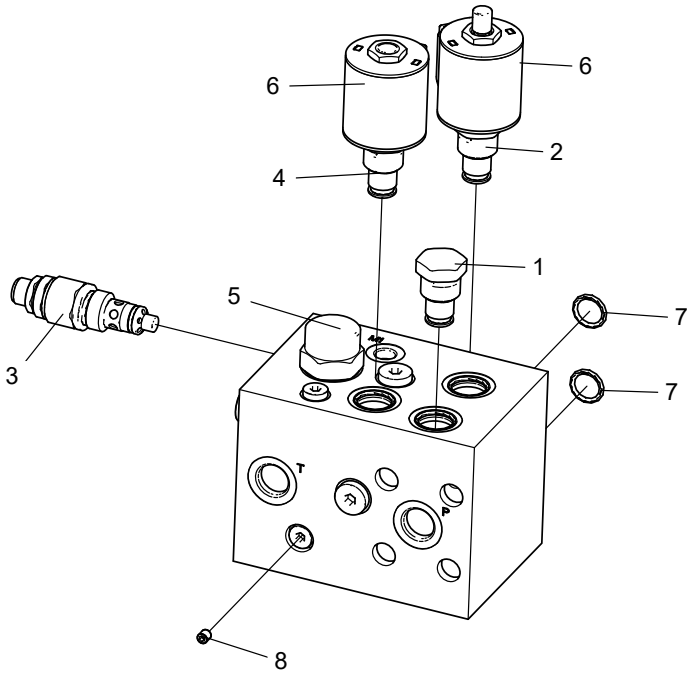

No.	Part No.	Qty.	Description
1	202990003095	1	Check valve
2	202990003099	1	Solenoid valve
3	202990000011	1	Spool
4	202990003100	1	Proportional solenoid valve
5	202990003101	1	Compensator valve
6	202990000035	2	Coil
7	207060003005	2	O-ring
8	202130000008	1	Damper plug

5.15 LEVELING COUNTERBALANCE VALVE(PN.202040000011)

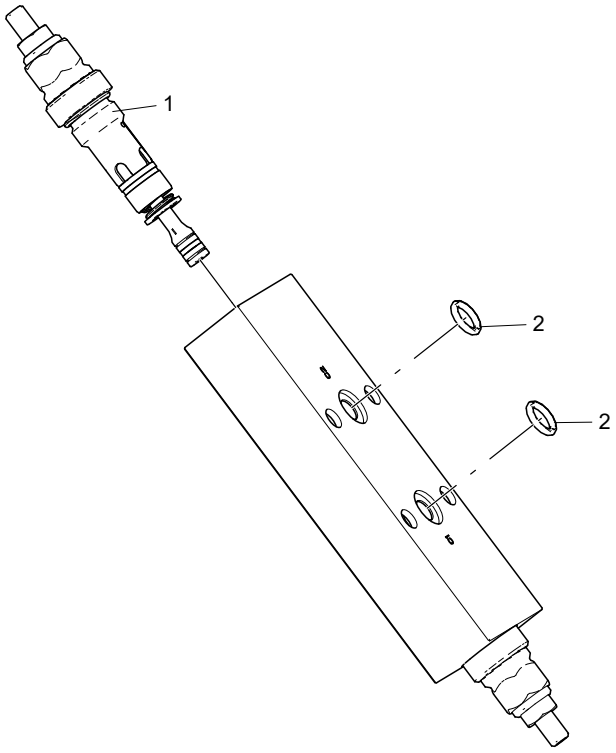

No.	Part No.	Qty.	Description
1	202990003040	2	Counterbalance valve spool
2	207040003003	2	O-ring

5.16 TURNTABLE TUBES LAYOUT

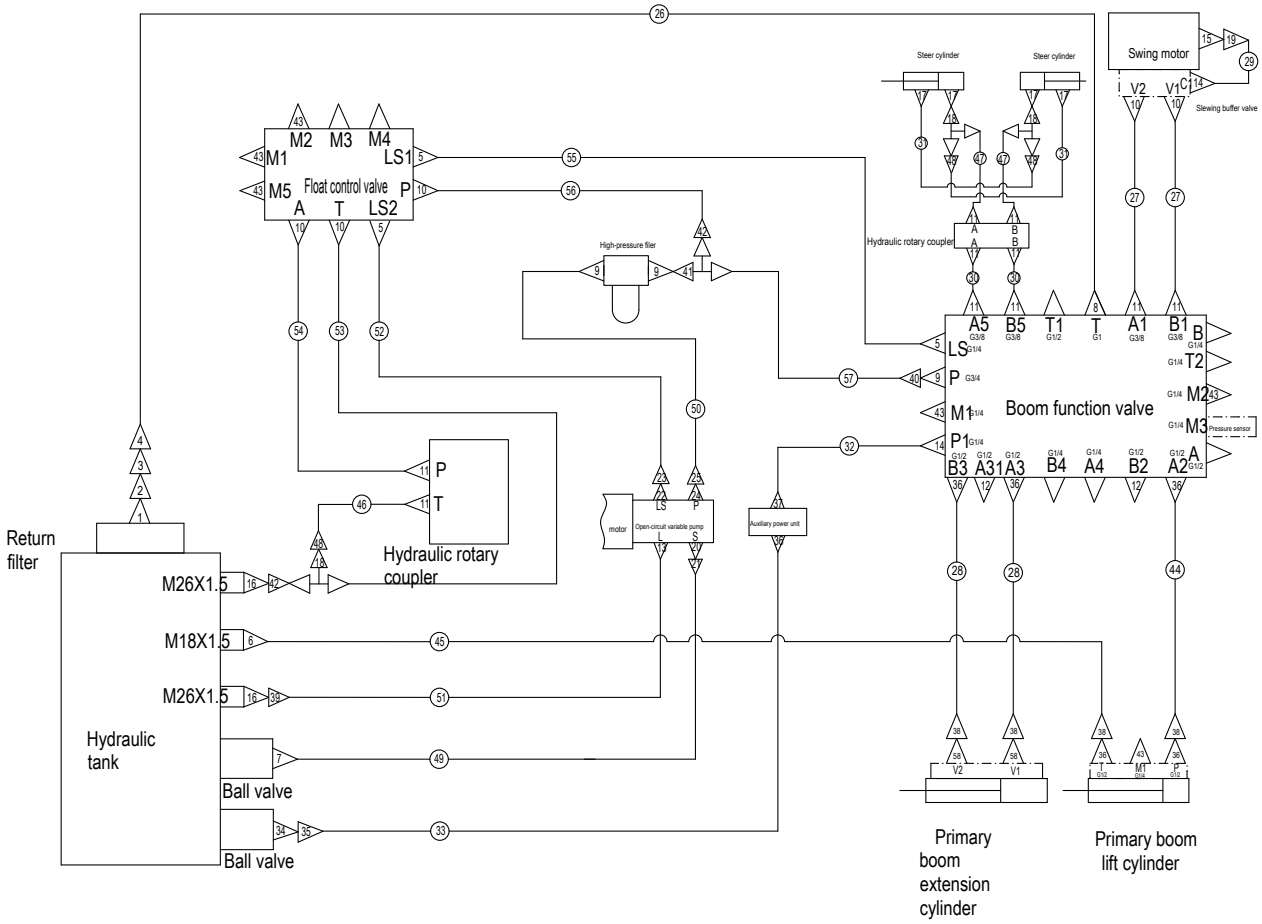

No.	Part No.	Qty.	Description
1	213010000003	2	Fitting
2	104008050035	1	Flange
3	215040000006	4	Washer 10-ZnD GB/T 93
4	215010000071	4	Bolt M10×30-8.8-ZnD GB/T 5783
5	213010000007	3	Fitting
6	213010000108	1	Fitting
7	105001050011	1	Adapter
8	213010000148	1	Fitting
9	213010000045	3	Fitting
10	213010000038	5	Fitting
11	213010000005	10	Fitting
12	213060000007	2	Plug
13	213010000069	1	Fitting
14	213010000012	2	Fitting
15	213010000057	1	Fitting
16	213010000037	2	Fitting
17	213010000031	4	Fitting
18	213010000032	3	Fitting
19	213010000009	1	Fitting
20	213030000012	1	Flange
21	215020000073	4	Screw M12×30-8.8-ZnD GB/T 70.1
22	213010000209	1	Fitting
23	213010000024	1	Fitting
24	213030000022	1	Flange
25	215020000050	4	Screw M10×30-8.8-ZnD GB/T 70.1
26	213050003357	1	Hose
27	213050000032	2	Hose
28	213050000526	2	Hose
29	213050003232	1	Hose
30	213050000416	2	Hose
31	213050000044	2	Hose
32	213050003358	1	Hose
33	213050003564	1	Hose
34	105001050002	1	Adapter
35	213010000098	1	Fitting
36	213010000039	6	Fitting
37	213010000125	1	Fitting

No.	Part No.	Qty.	Description
38	213010000008	4	Fitting
39	213010000104	1	Fitting
40	213010000041	1	Fitting
41	213010000043	1	Fitting
42	213010000046	2	Fitting
43	213010000010	6	Fitting
44	213050000598	1	Hose
45	213050000492	1	Hose
46	213050000426	1	Hose
47	213050001600	2	Hose
48	213010000055	3	Fitting
49	213050003353	1	Hose
50	213050000742	1	Hose
51	213050003103	1	Hose
52	213050000749	1	Hose
53	213050000034	1	Hose
54	213050003223	1	Hose
55	213050000621	1	Hose
56	213050000254	1	Hose
57	213050000737	1	Hose
58	207040000017	1	O-ring 53×3.55 GB/T 3452.1

5.17 OSCILLATE PIPING LAYOUT

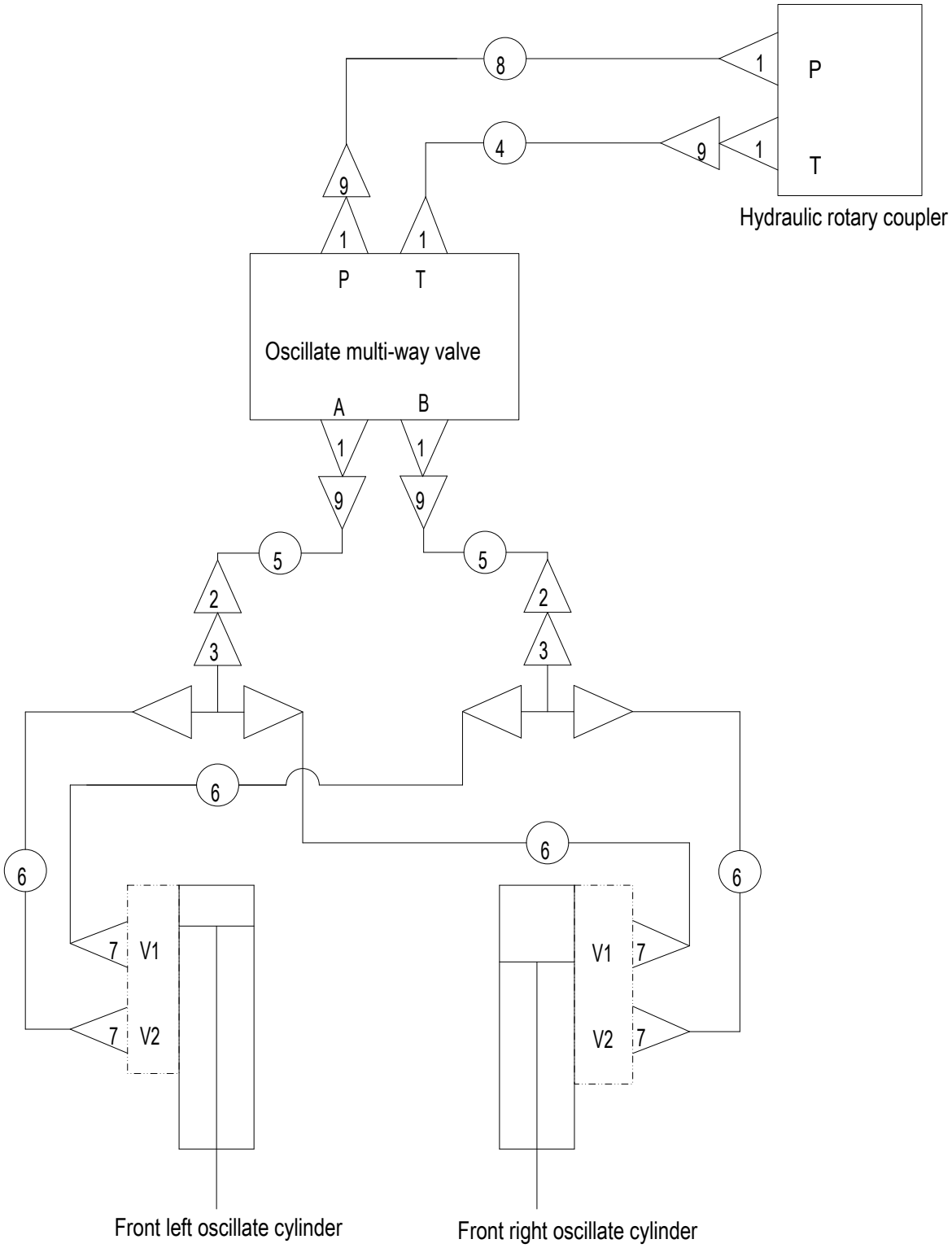

No.	Part No.	Qty.	Description
1	213010000005	6	Fitting
2	213010000087	2	Fitting
3	213010000155	2	Fitting
4	213050001520	1	Hose
5	213050000059	2	Hose
6	213050003072	4	Hose
7	213010000136	4	Fitting
8	213050000130	1	Hose
9	213010000055	4	Fitting

5.18 BOOM TUBES LAYOUT-TB20J PLUS&20EJ PLUS&20HJ PLUS

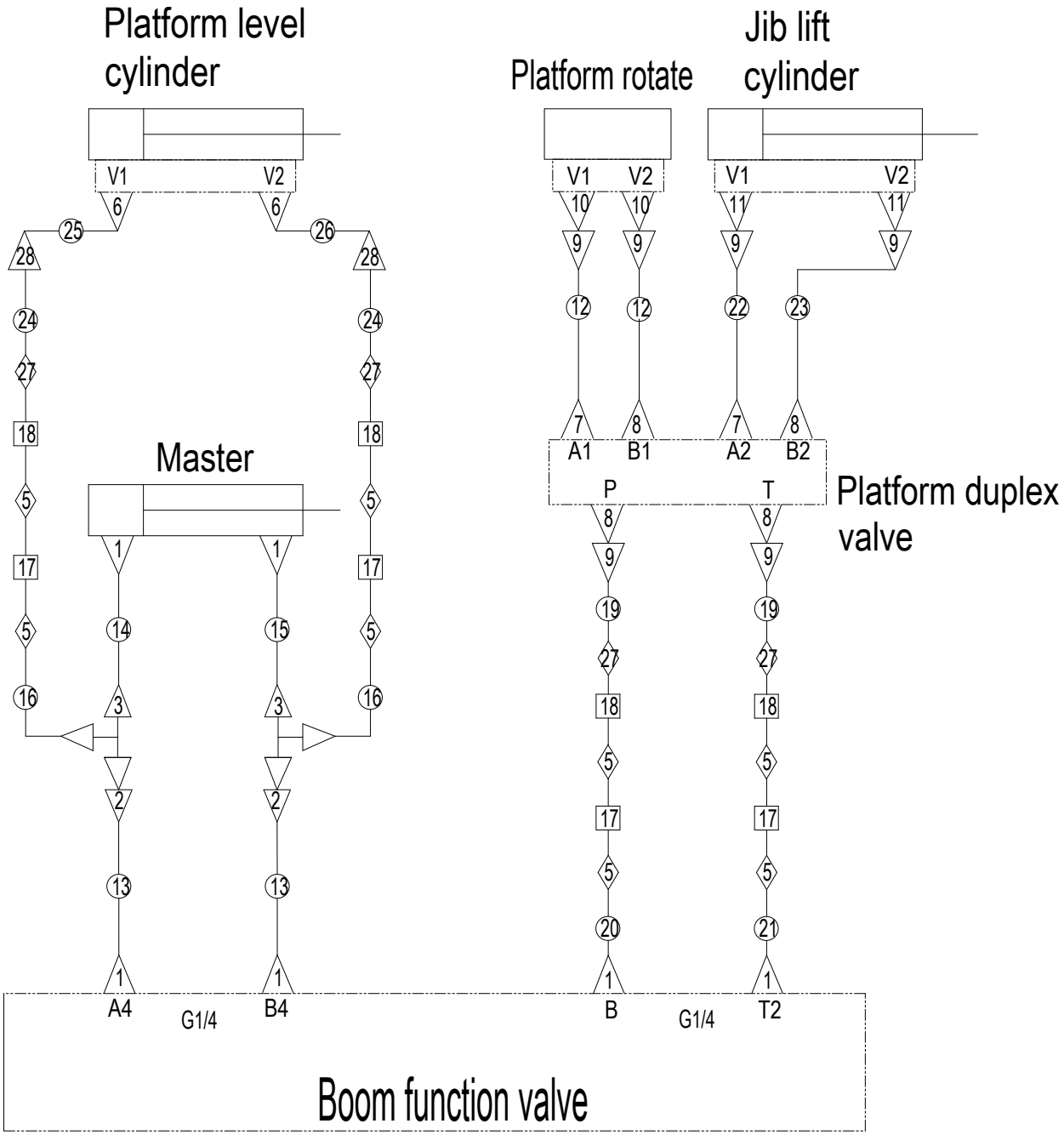

No.	Part No.	Qty.	Description
	105050053004	1	Boom piping layout
1	213010000012	6	Fitting
2	213010000093	2	Fitting
3	213010000079	2	Fitting
5	213010000126	8	Fitting
6	213010003029	2	Fitting
7	105030050010	2	Fitting
8	213010000007	4	Fitting
9	213010000024	6	Fitting
10	213010000013	2	Fitting
11	213010000047	2	Fitting
12	213050008344	2	Hose
13	213050008494	2	Hose
14	213050003373	1	Hose
15	213050003832	1	Hose
16	213050001029	2	Hose
17	105070053353	4	Steel pipe assembly
18	105049053000	4	Tube
19	213050001513	2	Hose
20	213050013178	1	Hose
21	213050008778	1	Hose
22	213050008353	1	Hose
23	213050003096	1	Hose
24	213050008636	2	Hose
25	213050003949	1	Hose
26	213050003950	1	Hose
27	213010003139	4	Fitting
28	213010000139	2	Fitting

5.19 HYDRAULIC SCHEMATIC

TB20EJ Plus hydraulic schematic

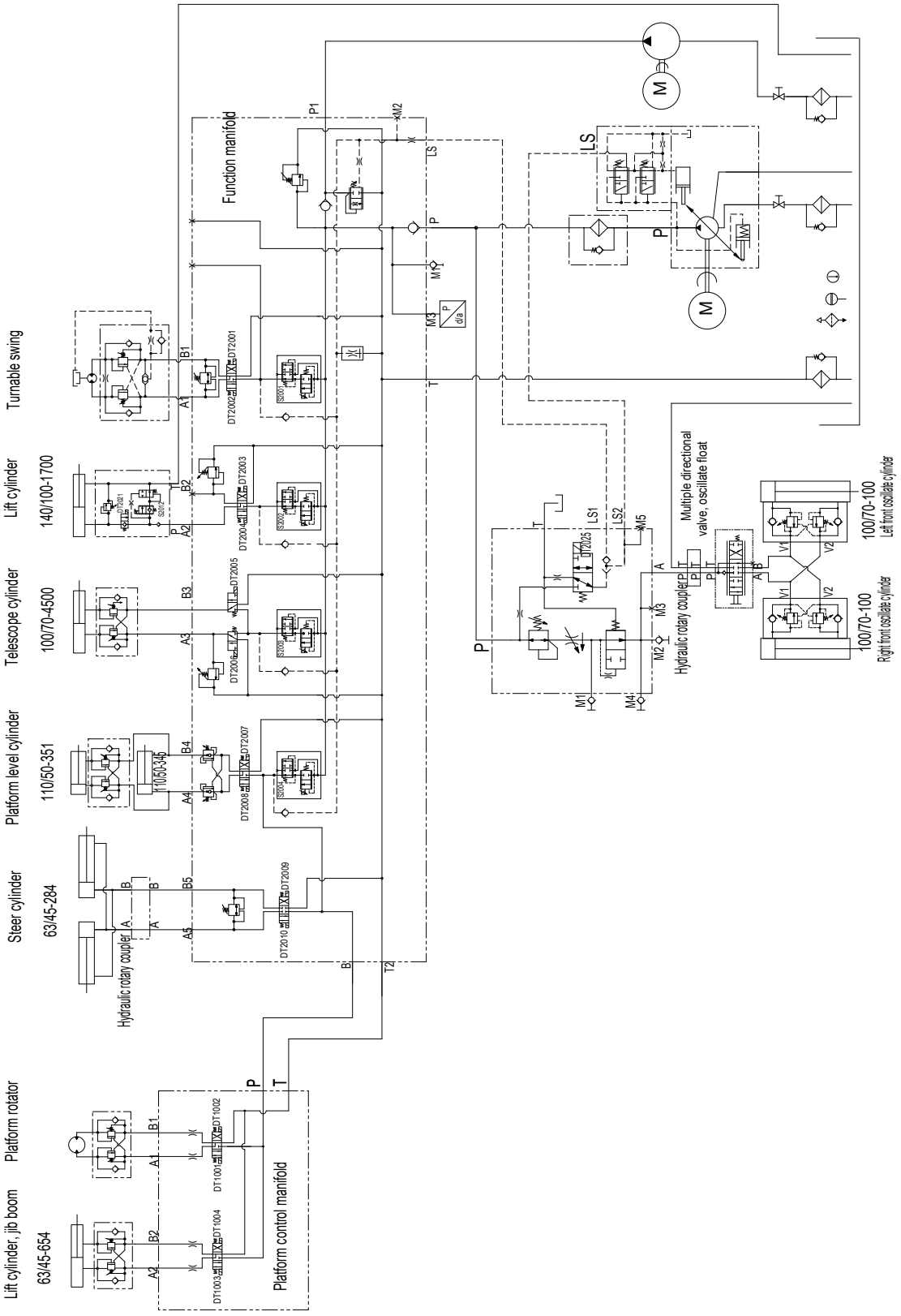

6 ELECTRICAL SYSTEM

6.1 CHASSIS ELECTRICAL COMPONENTS INSTALLATION

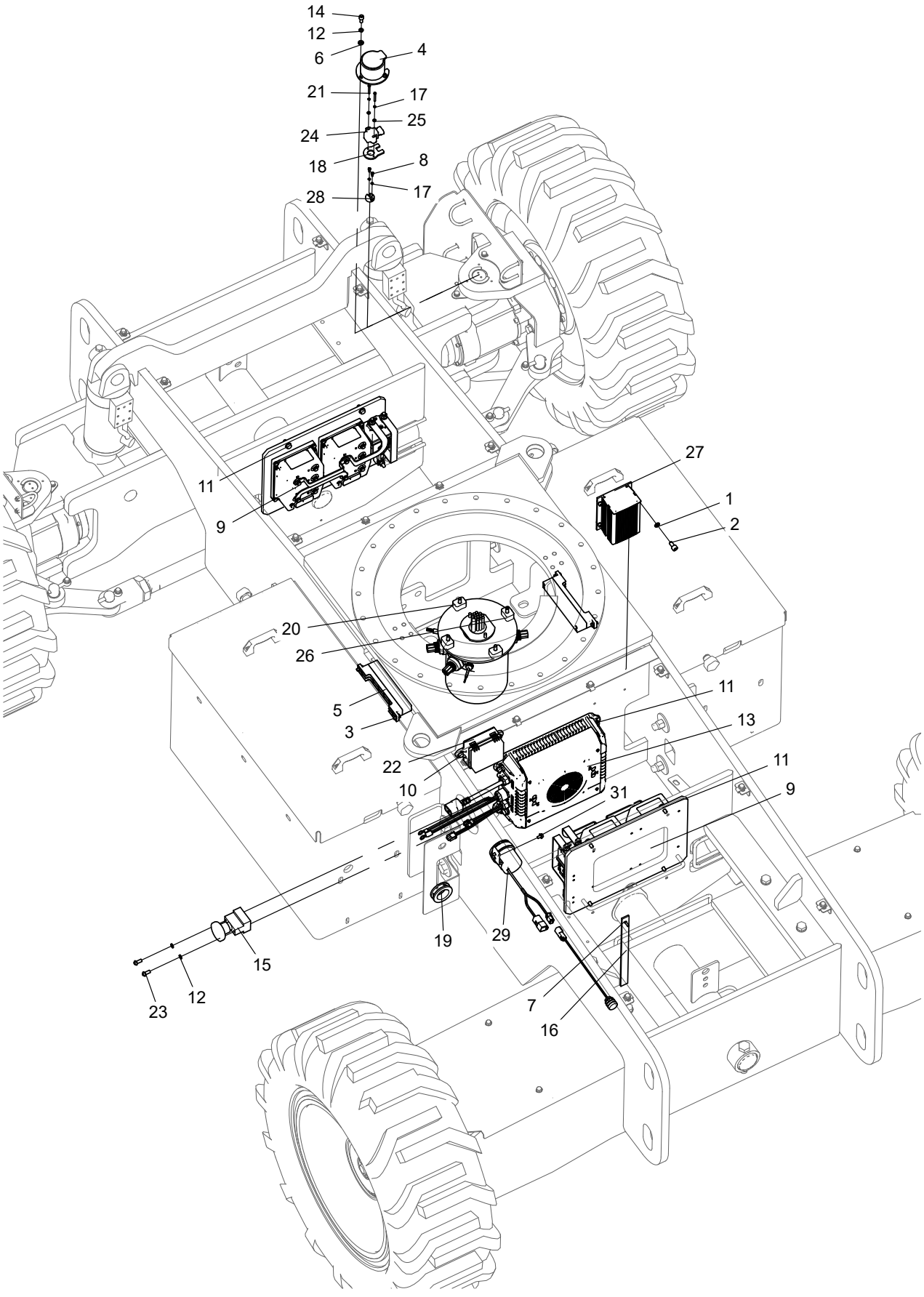

No.	Part No.	Qty.	Description
1	215040000004	8	Washer 6-A2-70 GB/T 93
2	215020000010	4	Screw M6×12-A2-70 GB/T 70.1
3	215010000050	4	Bolt M6×16-A2-70 GB/T 5783
4	103008030066	1	Guard
5	203080003028	2	Copper strip
6	215040000032	3	Washer 5-A2 GB/T 97.1
7	215010000256	1	Bolt M5×20-8.8-ZnD GB/T 5789
8	215020000001	2	Screw M4×10-A2-70 GB/T 70.1
9	103008063016	2	Drive motor controller options
9-1	203020003006	2	Motor controller assembly(Used with lead acid batteries)
9-2	203020003081	2	Motor Controller(Used with lithium battery)
10	215010000233	2	Bolt M8×12-8.8-ZnD GB/T 5789
11	215010000234	12	Bolt M8×20-8.8-ZnD GB/T 5789
12	215040000003	5	Washer 5-A2-70 GB/T 93
13	114002063049	1	Changer option
13-1	203100000069	1	Charger(Used with lead acid batteries)
13-2	203100003072	1	Charger(Used with lithium battery)
14	215020000006	3	Screw M5×12-A2-70 GB/T 70.1
15	203060000024	1	Power-off switch
16	203160000004	1	Rubber strap, anti-static
17	215040000002	4	Washer 4-A2-70 GB/T 93
18	103003030108	1	Plate
19	102004030245	1	Rubber grommet
20	203220003003	1	Central conductive ring
21	215020000212	2	Screw M4×35-A2-70 GB/T 818
22	203040003003	1	Relay box
23	215020000110	2	Screw M5×12-A2-70 GB/T 818
24	103007063015	1	Relative Angle Sensor Option
24-1	203150000046	1	Angle sensor
24-2	203150003049	1	angle sensor
25	215040000031	2	Washer 4-A2 GB/T 97.1
26	215010000257	4	Bolt M8×45-8.8-ZnD GB/T 5789
27	203190003008	1	DC/DC Converter
28	101016010062	1	Flange
29	203050003042	1	Voice Horn
30	203060003069	1	Button
31	215010000229	2	Bolt M6×10-8.8-ZnD GB/T 5789

6.2 LEAD ACID BATTERIES INSTALLATION

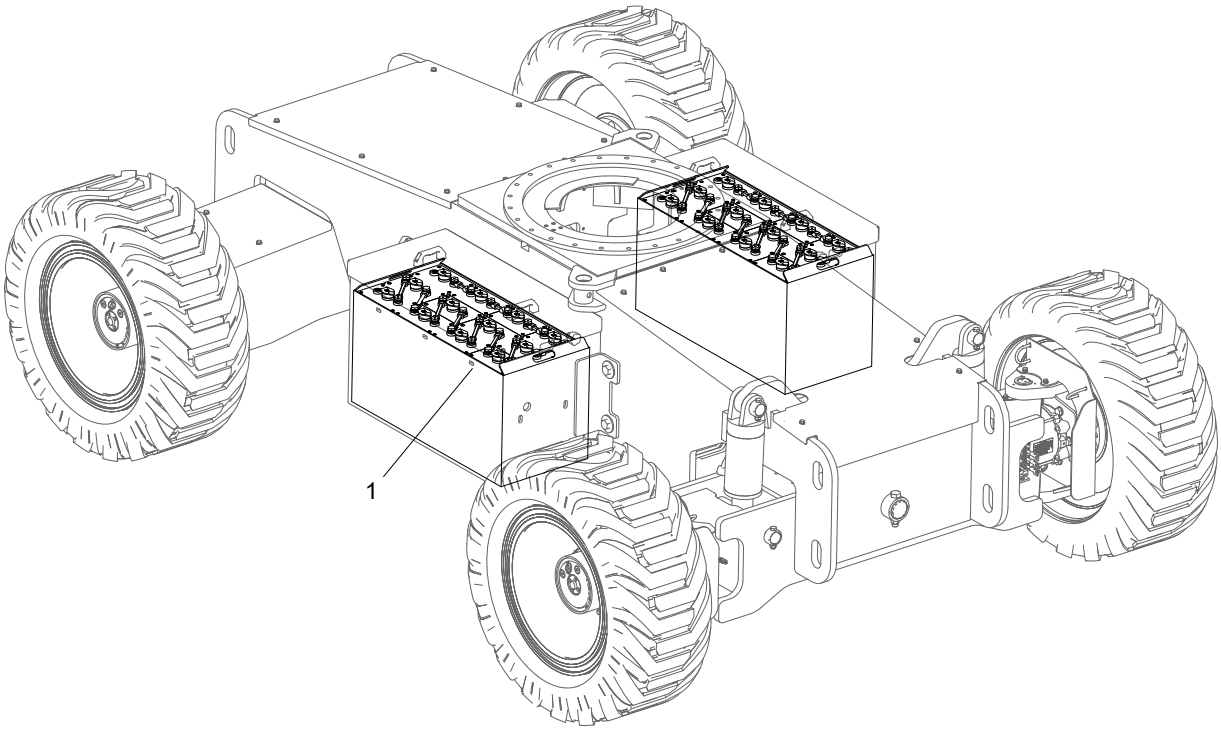

No.	Part No.	Qty.	Description
1	203100003008	2	Battery
2	114002063023	1	Power Cable Kit(Not shown)

6.3 LITHIUM BATTERIES INSTALLATION

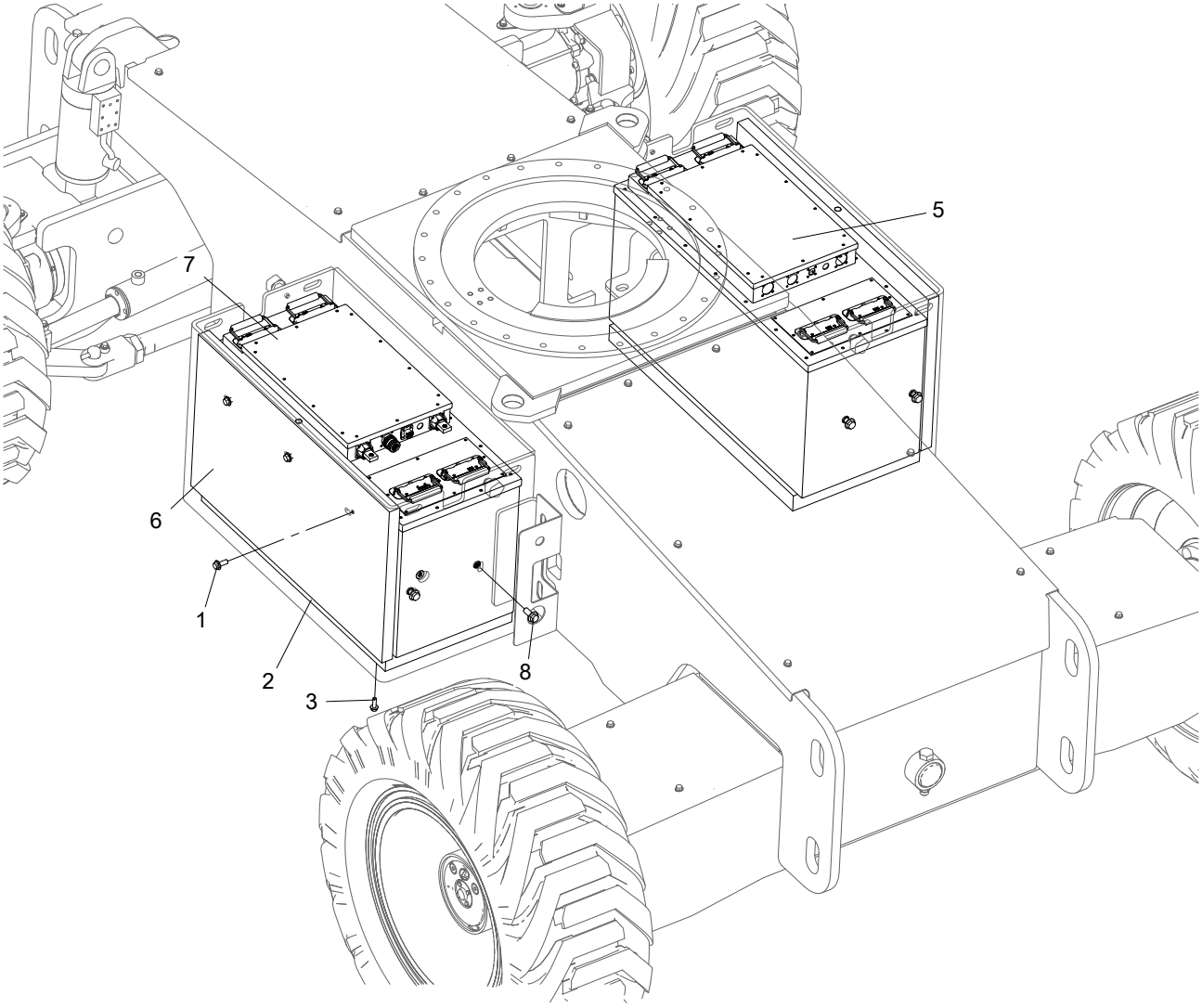

No.	Part No.	Qty.	Description
1	215010000238	6	Bolt M10×25-8.8-ZnD GB/T 5789
2	103006033028	2	Counterweight
3	215010000235	8	Bolt M8×25-8.8-ZnD GB/T 5789
4	114002063023	1	Power Cable Kit(Not shown)
5	203100003023	1	Lithium battery, secondary box
6	103006033029	2	Counterweight
7	203100003022	1	Lithium battery, main box
8	215010000243	8	Bolt M12×30-8.8-ZnD GB/T 5789

6.4 POWER CABLE KIT(PN.114002063023)

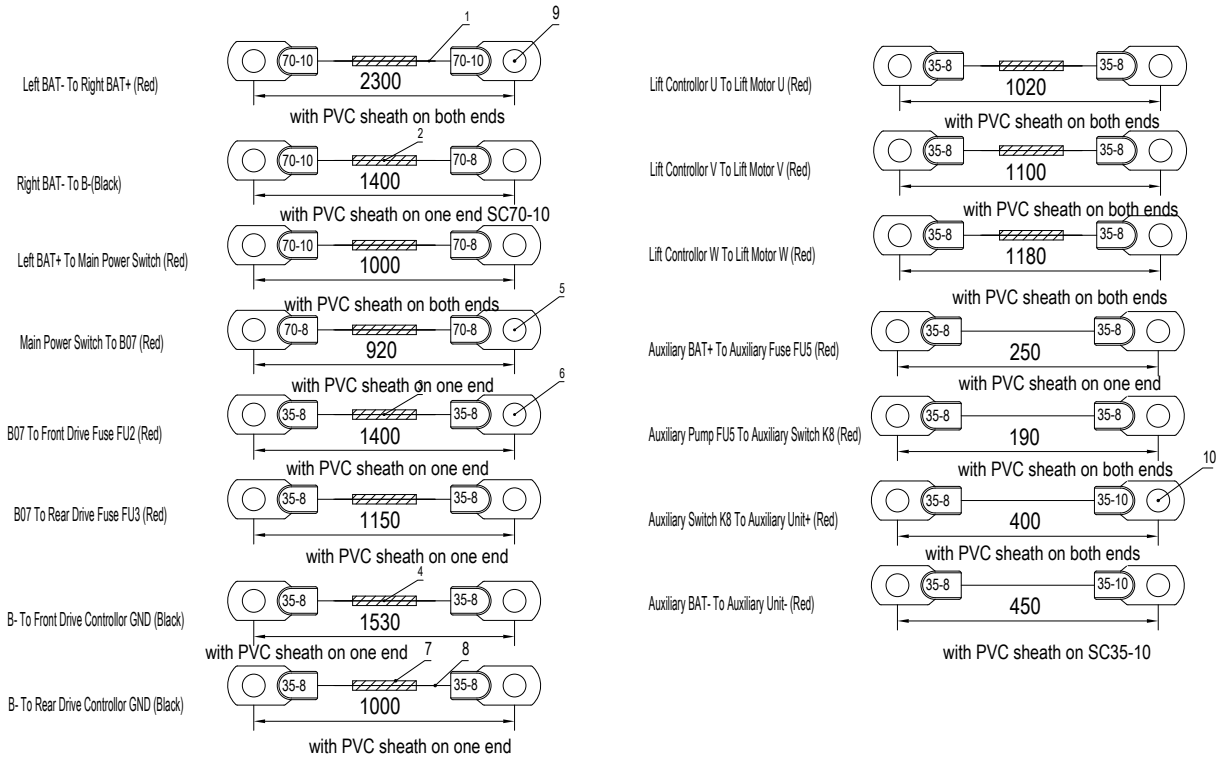

No.	Part No.	Qty.	Description
	114002063023	1	Power Cable Kit
1	203080000578	4	Cable (red)
2	203080000573	2	Cable (black)
3	203080000579	8	Cable (red)
4	203080000580	5	Cable (black)
5	203080000581	4	Cable lug, copper
6	203080000038	20	Cable lug, copper
7	203080000422	18	Nylon hose, closed-end
8	203080000004	22	Connector, PVC
9	203080000574	4	Cable lug, copper
10	203080000045	2	Cable lug, copper

6.5 TURNTABLE ELECTRICAL COMPONENTS INSTALLATION

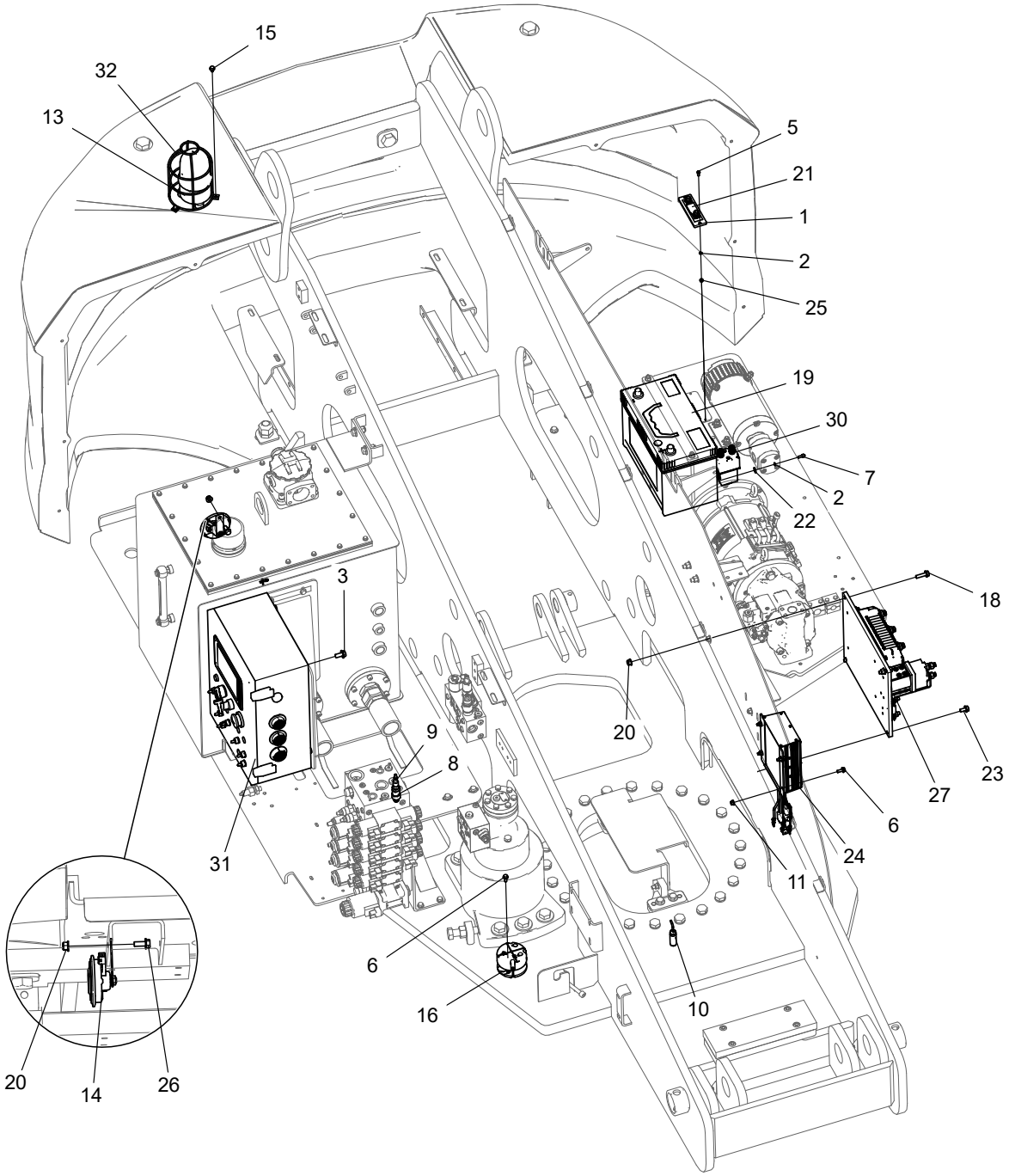

No.	Part No.	Qty.	Description
1	203070000056	1	Fuse holder
2	215040000003	4	Washer 5-A2-70 GB/T 93
3	215010000237	4	Bolt M10×20-8.8-ZnD GB/T 5789
4	114002063042	1	Turntable Harness(Not shown)
5	215020000110	2	Screw M5×12-A2-70 GB/T 818
6	215010000230	7	Bolt M6×16-8.8-ZnD GB/T 5789
7	215020000006	2	Screw M5×12-A2-70 GB/T 70.1
8	203150000055	1	Pressure sensor
9	203080003094	1	Plug, with cable
10	203150003010	1	Proximity switch
11	215030000107	4	Nut M6-8-ZnD GB/T 6183
12	203080000250	1	Battery terminal (Not shown)
13	203050003017	1	Beacon light
14	203050000034	1	Horn
15	215010000229	3	Bolt M6×10-8.8-ZnD GB/T 5789
16	103008063058	1	Options, Level sensor installation
16-1	203150000039	1	Level sensor
16-2	203060000111	1	Level sensor
16-3	203150003056	1	Angle Sensor
17	203100000051	1	Jacket, flexible(Not shown)
18	215010000236	2	Bolt M8×30-8.8-ZnD GB/T 5789
19	203100000061	1	Battery, maintenance-free
20	215030000108	3	Nut M8-8-ZnD GB/T 6183
21	203070003000	1	Fuse
22	215040000132	2	Washer 5-200HV-A2 GT/B 96.1
23	215010000286	2	Bolt M8×16-8.8-ZnD GB/T 5789
24	203190003000	1	DC/DC Converter
25	215030000003	2	Nut M5-A2-70 GB/T 6170
26	215010000234	1	Bolt M8×20-8.8-ZnD GB/T 5789
27	114001063019	1	Lift motor controller options
27-1	203020003012	1	Motor controller assembly(Used when lead-acid battery is equipped)
27-2	203020003082	1	Motor Controller-PUMP (Used when lithium battery is equipped)
28	203100000053	1	Jacket, flexible(Not shown)
29	114002063009	1	Turntable Sensors Harness(Not shown)
30	203040003002	1	Contactor
31	114004063029	1	Ground controller Box
32	105021060024	1	Guard, beacon light

6.6 GROUND CONTROLLER ASSEMBLY (PN.114004063029)

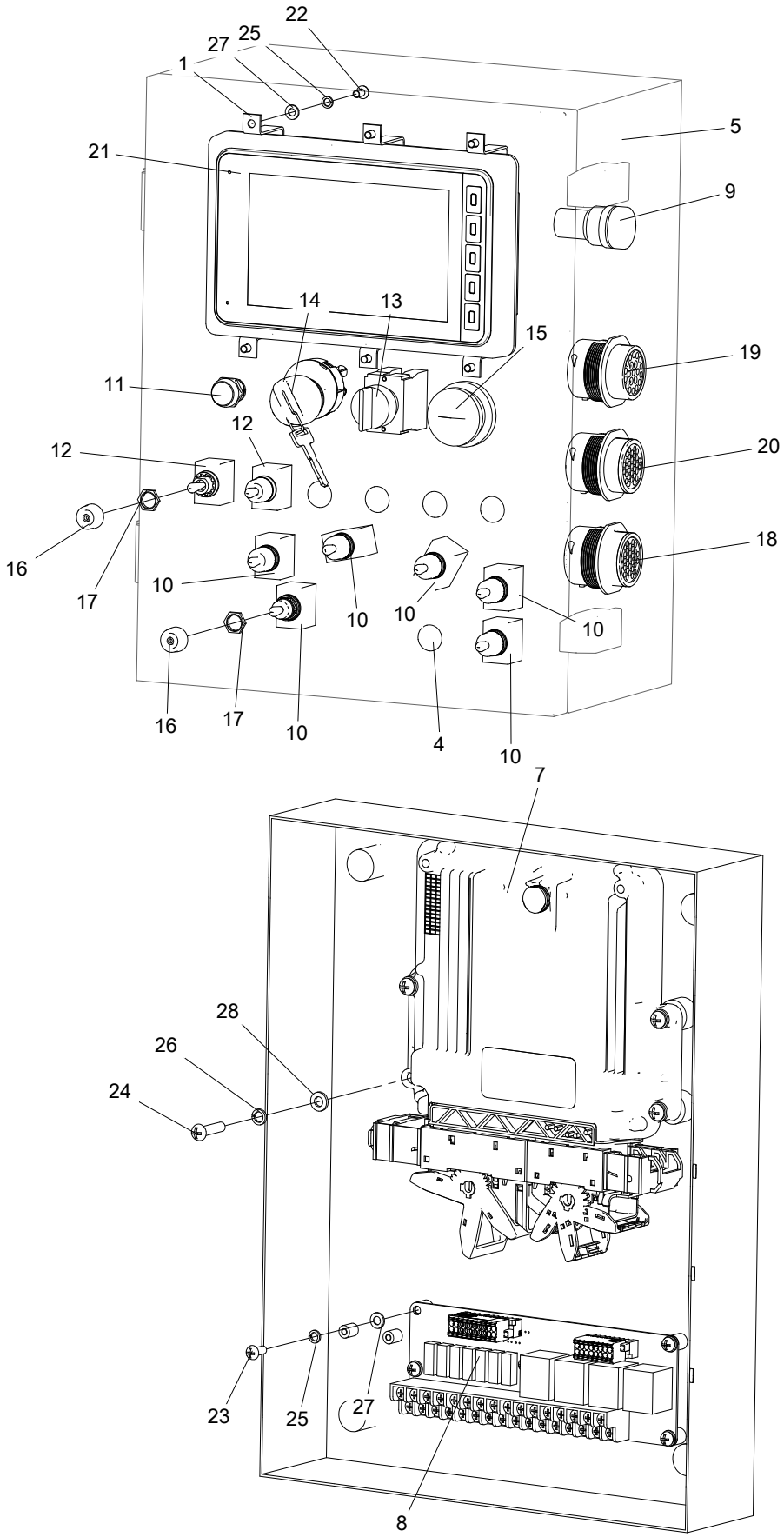

No.	Part No.	Qty.	Description
1	105001060106	3	Retaining plate, display screen
2	105025063004	1	Membrane, ground controller(Not shown)
3	105025063005	1	PC film, ground controller(Not shown)
4	105045060004	5	Plug, controller
5	113001063012	1	Ground controller
6	114004063032	1	Ground Control Box Harness(Not shown)
7	203020000038	1	Controller
8	203030000015	1	Integrated board, relay
9	203050003021	1	Buzzer
10	203060000003	6	Switch, toggle
11	203060000020	1	Button, yellow
12	203060000021	2	Switch, toggle
13	203060000029	1	Select switch
14	203060000114	1	Key switch
15	203060000142	1	Emergency stop switch
16	203080000101	8	Cap, waterproof
17	203080000109	8	Nut
18	203080000516	1	Connector, 31P, female
19	203080000518	1	Connector, 21-pin, male
20	203080000523	1	Connector, 31P, male
21	203200000004	1	Display screen
22	215020000109	6	Screw M5×10-A2-70 GB/T 818
23	215020000110	5	Screw M5×12-A2-70 GB/T 818
24	215020000118	4	Screw M6×25-A2-70 GB/T 818
25	215040000003	11	Washer 5-A2-70 GB/T 93
26	215040000004	4	Washer 6-A2-70 GB/T 93
27	215040000032	11	Washer 5-A2 GB/T 97.1
28	215040000033	4	Washer 6-A2 GB/T 97.1

6.7 GROUND CONTROLLER WIRING DIAGRAM (PN.114004063032)

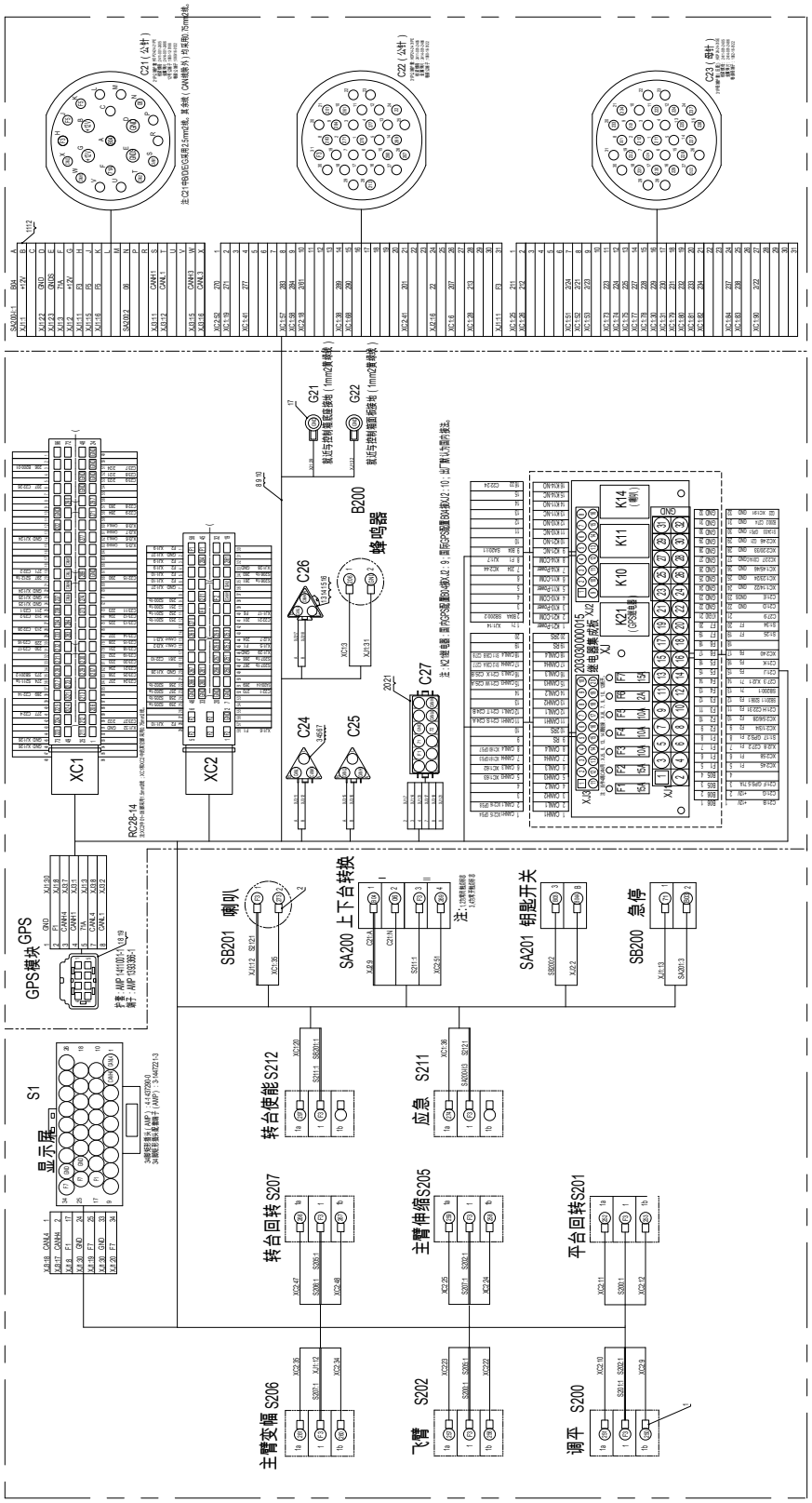

No.	Part No.	Qty.	Description
	114004063032	1	Ground Control Box Harness
1	203080000036	26	Terminal
2	203080000023	4	Terminal, blade-hole type
3	203080000404	2	Sheath
4	203080000032	2	Lock
5	203080000041	12	Terminal, female
6	203080000068	3	Blind plug
7	203080000473	2	Cover, waterproof
8	203080000564	15	Cable, thin wall (white)
9	203080000562	5	Cable, thin wall (red)
10	203080000563	7	Cable, thin wall (black)
11	203080000047	1	Cable
12	203080000196	1	Cable
13	203080000405	1	Sheath
14	203080000046	1	Lock
15	203080000033	2	Terminal, male
16	203080000086	1	Sheath
17	203080000133	2	Terminal, blade-hole type
18	203080003216	1	Sheath
19	203080003218	7	Terminal AMP
20	203080000155	1	Sheath
21	203080000159	1	Lock

6.8 TURNTABLE HARNESS(PN.114002063042)

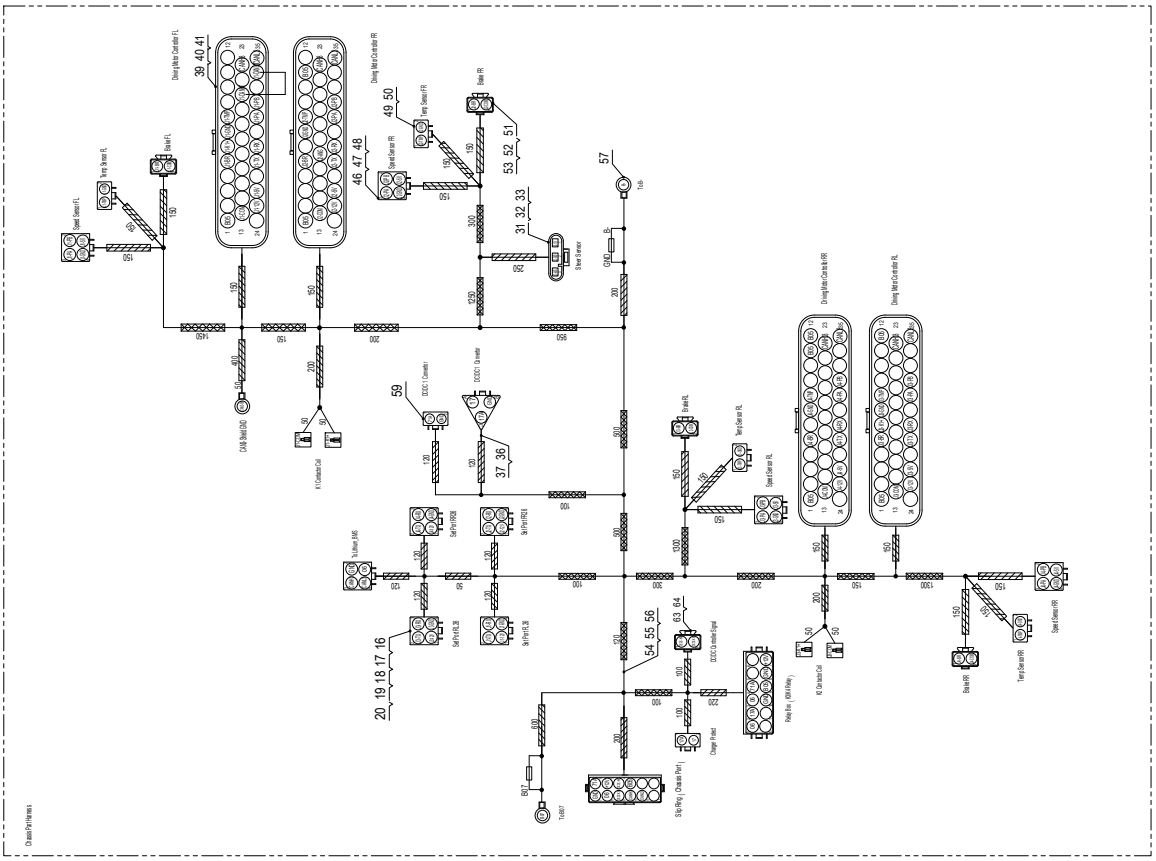

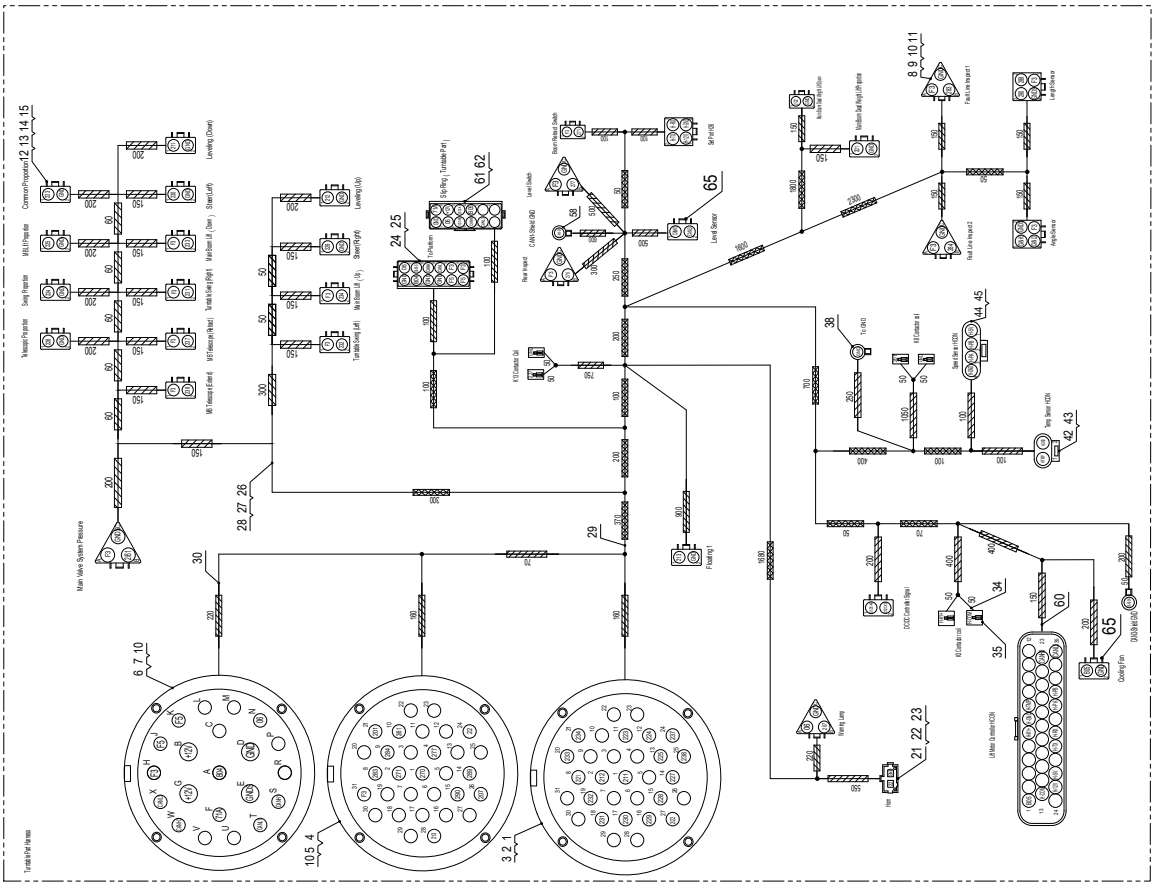

No.	Part No.	Qty.	Description
	114002063042	1	Turntable Harness
1	203080000515	1	Connector, 31P, male
2	203060000096	3	End clip, 180 deg.
3	203080000033	36	Terminal, male
4	203080000520	1	Connector, 31P, female
5	203080000068	51	Blind plug
6	203080000517	1	Connector, 21-pin, female
7	203060000097	4	Terminal, #12, female
8	203080000404	7	Sheath
9	203080000032	7	Lock
10	203080000041	138	Terminal, female
11	203080000508	7	End clip
12	203080000410	20	Sheath
13	203080000016	20	Lock
14	203080000437	20	End attachments, 2-pin, female
15	203080000448	20	Rubber, 2-pin
16	203080000044	8	Sheath
17	203080000020	8	Lock
18	203080000445	8	End attachments, 4-pin, female
19	203080000446	8	Rubber, 4-pin
20	203080000492	7	Cover, waterproof
21	203080000427	1	Sheath
22	203080000428	2	Pin, female
23	203080000429	1	Cap, waterproof
24	203080000414	2	Sheath
25	203080000159	2	Lock
26	203080000424	10	Nylon hose, closed-end
27	203080000422	8	Nylon hose, closed-end
28	203080000037	4	Corrugated pipe
29	203080000419	1	Nylon hose, closed-end
30	203080000417	1	Nylon hose, closed-end
31	203080000298	9	Terminal
32	203080000314	1	Lock
33	203080000315	1	Sheath
34	203080000030	3	Heat shrink tube
35	203080000130	10	Terminal
36	203080000047	3	Cable

No.	Part No.	Qty.	Description
37	203080000196	4	Cable
38	203080000124	1	Terminal, blade-hole type
39	203080003017	5	Sheath
40	203080003021	74	Terminal, 35P, AMP
41	203080000295	101	Plastic plug
42	203080000291	1	Sheath
43	203080000297	1	Seal ring
44	203080000292	1	Sheath
45	203080000287	1	Seal ring
46	203080003020	4	Sheath
47	203060000085	24	Terminal, female
48	203080003022	4	Lock
49	203080003018	4	Sheath
50	203080003023	4	Lock
51	203080003019	4	Sheath
52	203080003024	4	Lock
53	203060000086	8	Terminal, male
54	203080000564	120	Cable, thin wall (white)
55	203080000563	40	Cable, thin wall (black)
56	203080000562	20	Cable, thin wall (red)
57	203080000018	4	Terminal, blade-hole type
58	203080000133	1	Terminal, blade-hole type
59	203080003013	2	Terminal, female
60	203080003215	1	End clip
61	203080000403	2	Sheath
62	203080000157	2	Lock
63	203080000408	1	Sheath
64	203080000021	1	Lock
65	203080000474	2	Cover, waterproof

6.9 TURNTABLE SENSORS HARNESS(PN.114002063009)

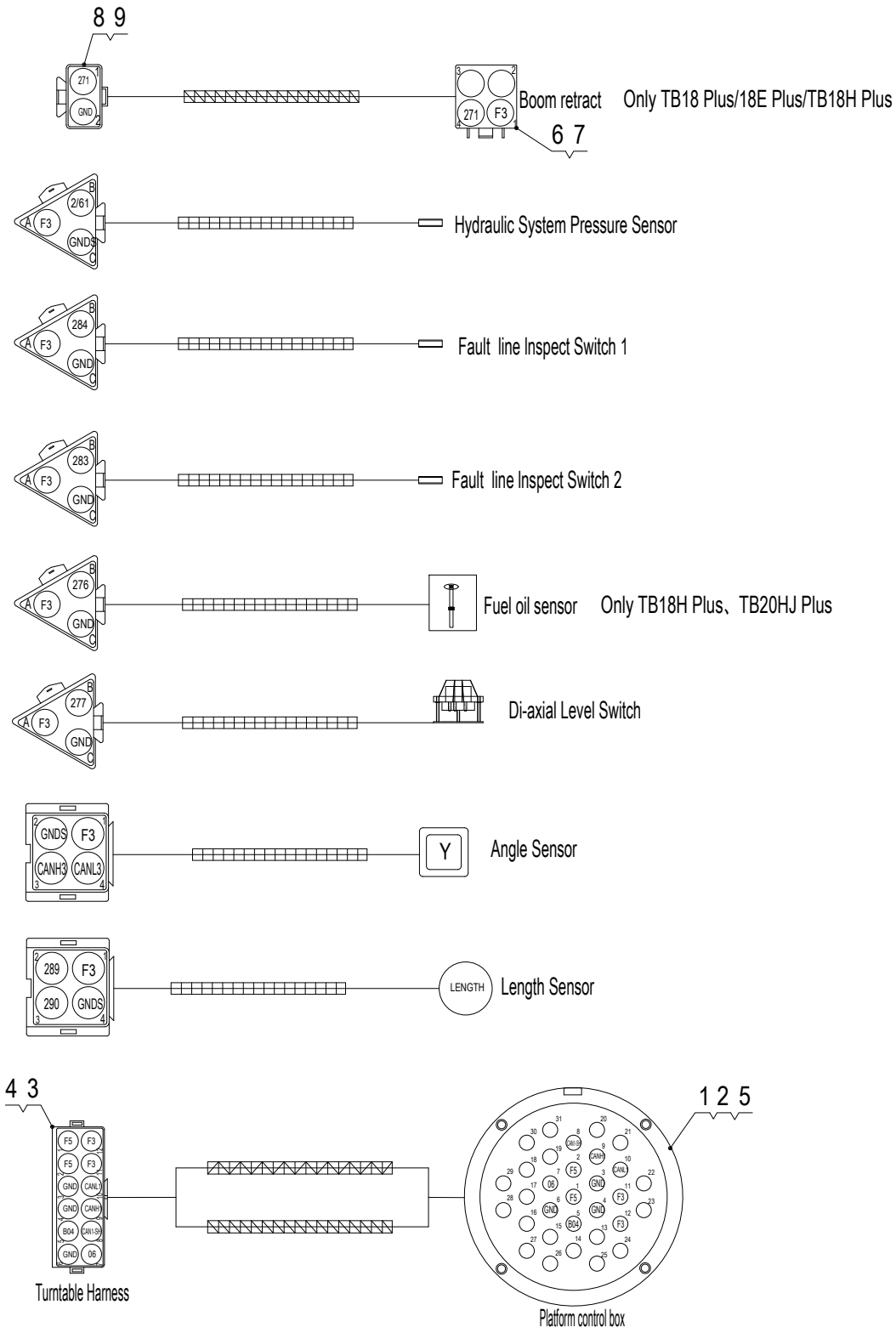

No.	Part No.	Qty.	Description
	114002063009	1	Turntable Sensors Harness
1	203080000157	1	Lock
2	203060000096	1	End clip, 180 deg.
3	203080000020	1	Lock
4	203080000021	1	Lock
5	203080000403	1	Sheath
6	203080000408	1	Sheath
7	203080000044	1	Sheath
8	203080000520	1	Connector, 31P, female
9	203080000068	21	Blind plug

6.10 BOOM ELECTRICAL COMPONENTS INSTALLATION

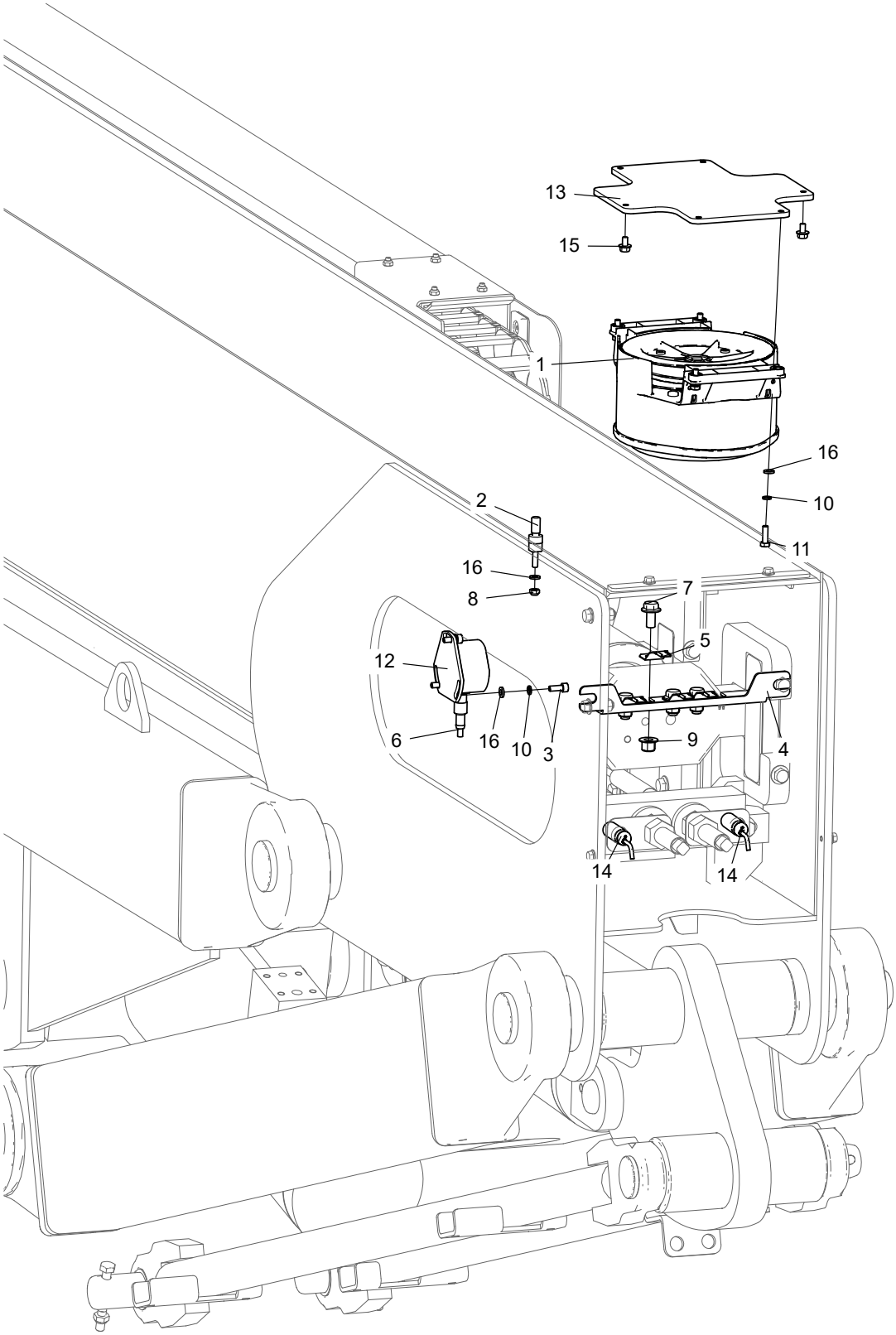

No.	Part No.	Qty.	Description
1	203150000051	1	Length sensor
2	105001060075	1	Thread rod, for length sensor
3	215020000011	3	Screw M6×16-A2-70 GB/T 70.1
4	105049013002	1	Bracket
5	203080000525	4	Fixture
6	203080003104	1	Plug, with cable
7	215010000237	4	Bolt M10×20-8.8-ZnD GB/T 5789
8	215030000025	1	Nut M6-8-A2-70 GB/T 889.1
9	215030000109	4	Nut M10-8-ZnD GB/T 6183
10	215040000004	7	Washer 6-A2-70 GB/T 93
11	215010000051	4	Bolt M6×20-A2-70 GB/T 5783
12	105050063060	1	Angle Sensor
12-1	203150000058	1	Sensor, CAN bus
12-2	203150003062	1	Dual angle bus sensor
13	105001010254	1	Mount, length sensor
14	203150003010	2	Proximity switch
15	215010000229	2	Bolt M6×10-8.8-ZnD GB/T 5789
16	215040000033	8	Washer 6-A2 GB/T 97.1

6.11 CABLE TRACK DIAGRAM(PN.114002063018)

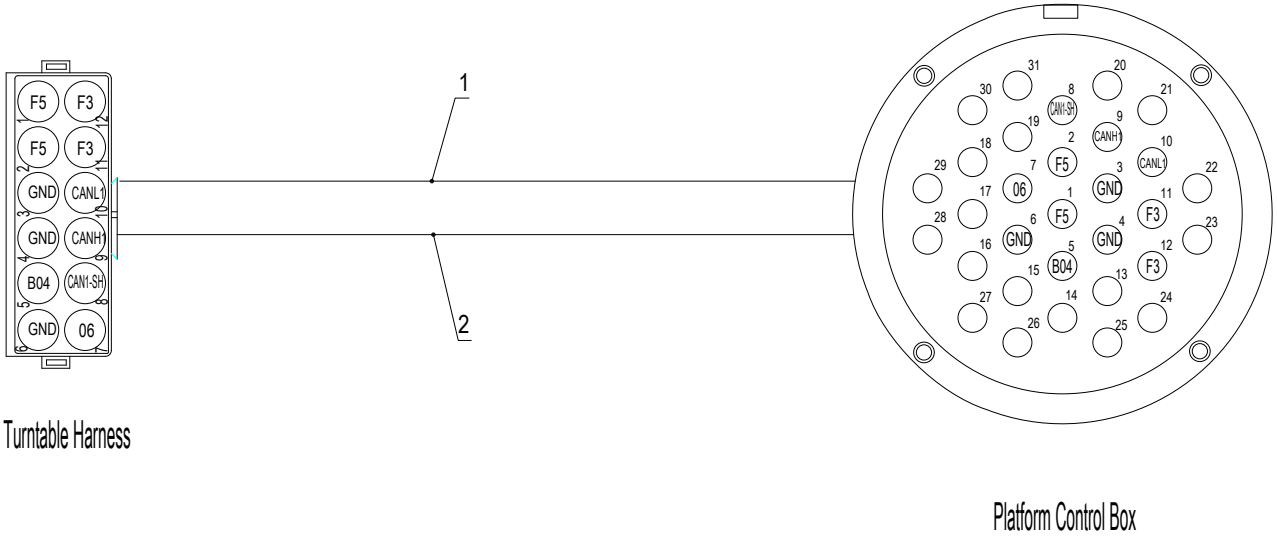

No.	Part No.	Qty.	Description
	114002063018	1	Cable track diagram
1	203080003310	1	Cable, cable track
2	203080003311	1	Cable, CAN bus, cable track

6.12 PLATFORM ELECTRICAL COMPONENTS INSTALLATION

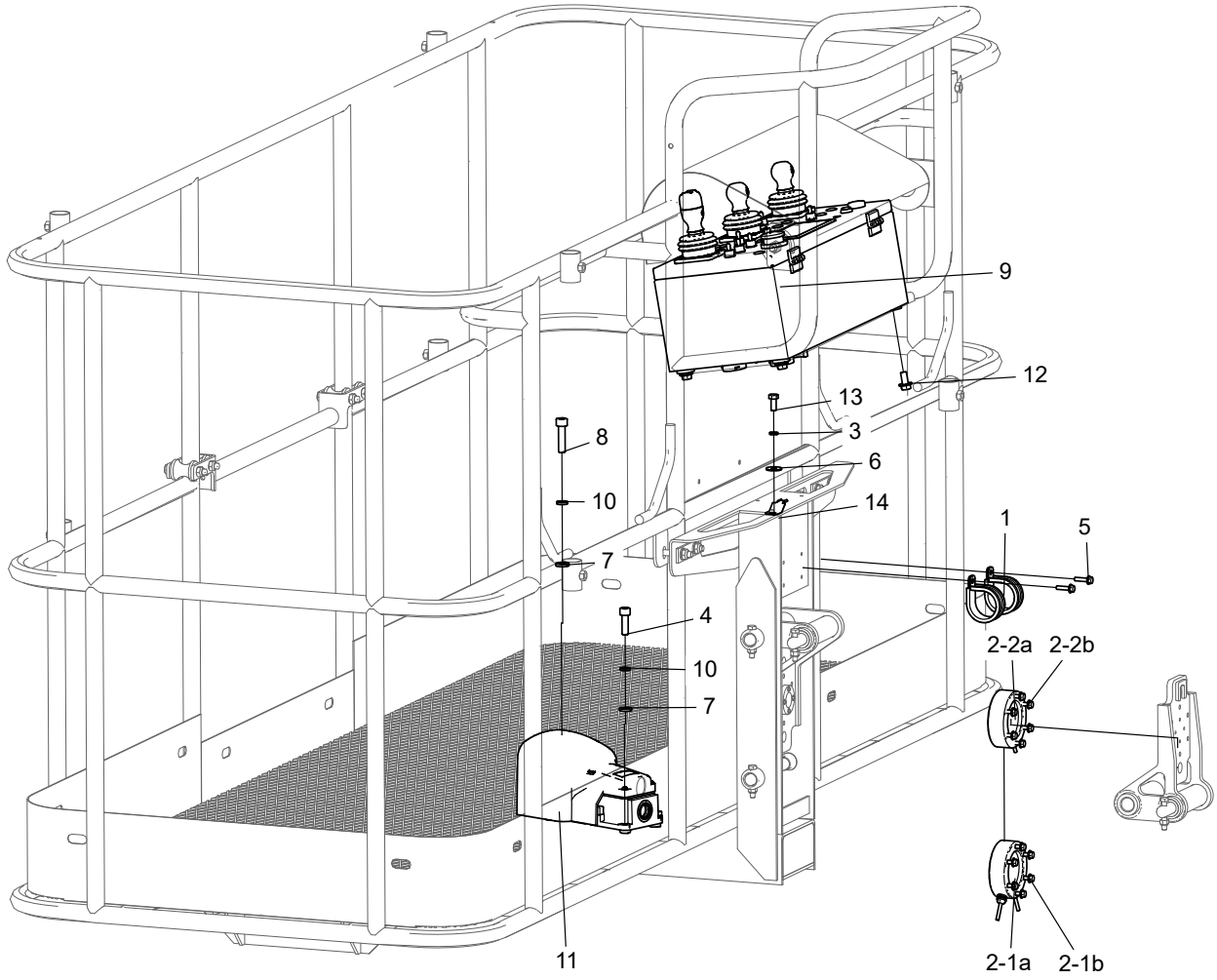

No.	Part No.	Qty.	Description
1	216020000025	2	Retaning ring, SSG
2	103006060034		Load sensor options
2-1	103006060026	1	Load sensor, dual-channel
2-1a	203150000070	1	Load sensor
2-1b	215010000232	2	Bolt M6×25-8.8-ZnD GB/T 5789
2-2	103006060029	1	Load sensor
2-2a	203150000069	1	Load sensor
2-2b	215010000232	6	Bolt M6×25-8.8-ZnD GB/T 5789
3	215040000003	1	Washer 5-A2-70 GB/T 93
4	215020000012	2	Screw M6×20-A2-70 GB/T 70.1
5	215010000232	6	Bolt M6×25-8.8-ZnD GB/T 5789
6	215040000132	1	Washer 5-200HV-A2 GT/B 96.1
7	215040000033	3	Washer 6-A2 GB/T 97.1
8	215020000013	1	Screw M6×25-A2-70 GB/T 70.1
9	114002063015	1	Platform controller assembly(See Details)
10	215040000004	3	Washer 6-A2-70 GB/T 93
11	203060000009	1	Footswitch
12	215010000237	4	Bolt M10×20-8.8-ZnD GB/T 5789
13	215010000041	1	Bolt M5×12-A2-70 GB/T 5783
14	203080000525	1	Fixture

6.13 PLATFORM CONTROL BOX ASSEMBLY (PN.114002063015)

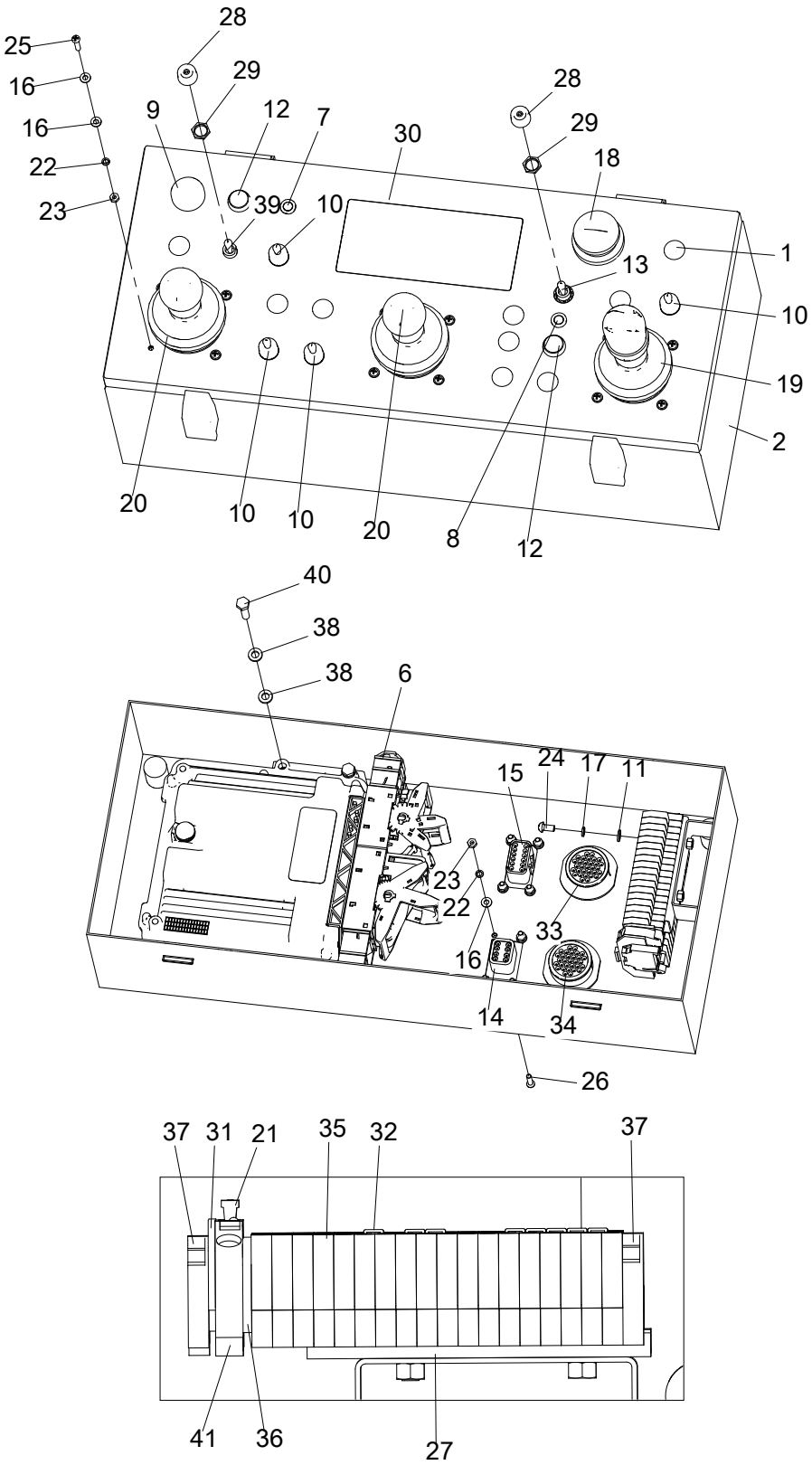

No.	Part No.	Qty.	Description
1	105045060004	9	Plug, controller
2	105050063019	1	Platform controller
3	105050063020	1	Platform Control Box Assembly(Not shown)
4	105050063021	1	PC film, platform controller(Not shown)
5	114001063001	1	Platform control box wiring diagram(Not shown)
6	203020000038	1	Controller
7	203050003014	1	Indicator light
8	203050003015	1	Indicator light
9	203050003021	1	Buzzer
10	203060000003	4	Switch, toggle
11	215040000032	2	Washer 5-A2 GB/T 97.1
12	203060000020	2	Button, yellow
13	203060000035	1	Switch, toggle
14	203060000088	1	Connector, 8p, with flange
15	203060000090	1	Connector, 12p, with flange
16	215040000031	32	Washer 4-A2 GB/T 97.1
17	215040000003	2	Washer 5-A2-70 GB/T 93
18	203060000142	1	Emergency stop switch
19	203060003081	1	Joystick
20	203060003084	2	Joystick
21	203070000053	1	Fuse
22	215040000002	20	Washer 4-A2-70 GB/T 93
23	215030000002	20	Nut M4-8-A2-70 GB/T 6170
24	215020000109	2	Screw M5×10-A2-70 GB/T 818
25	215020000107	12	Screw M4×20-A2-70 GB/T 818
26	215020000106	8	Screw M4×16-A2-70 GB/T 818
27	203990000001	1	Guiderail
28	203080000101	6	Cap, waterproof
29	203080000109	6	Nut
30	203200003002	1	Gauge
31	203080003059	1	End plate
32	203080003058	8	Jumper
33	203080000516	1	Connector, 31P, female
34	203080000523	1	Connector, 31P, male
35	203080003051	18	Terminal
36	203080003052	1	End plate
37	203080003053	2	Terminal block end plate

No.	Part No.	Qty.	Description
38	215040003034	8	Nylon Washer 6-PA66
39	203060000021	1	Switch, toggle
40	215010003054	4	Nylon Bolt M6×25-4.8-PA66
41	203080003057	1	Terminal

6.14 PLATFORM CONTROL BOX HARNESS(PN.1140010630O1)

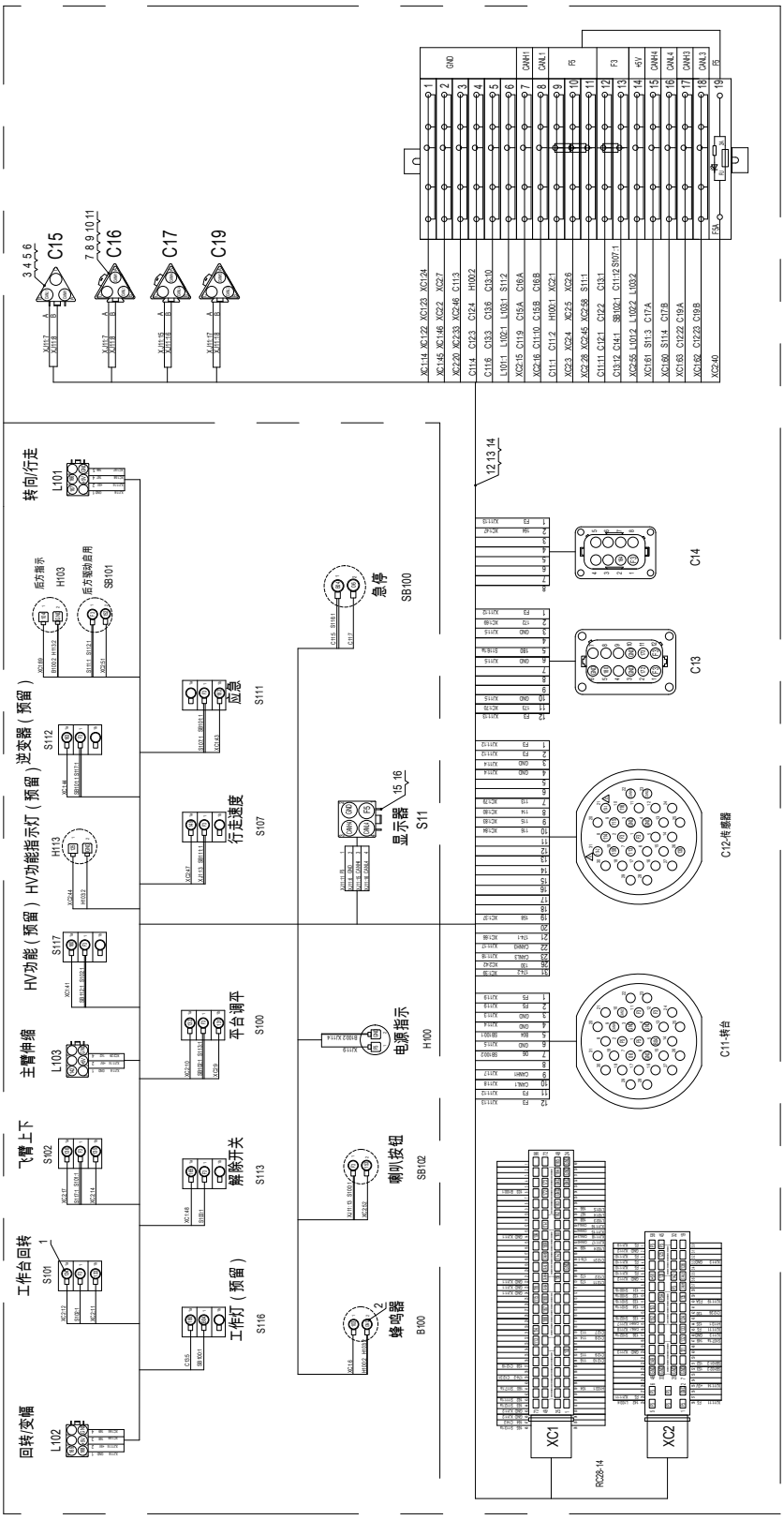

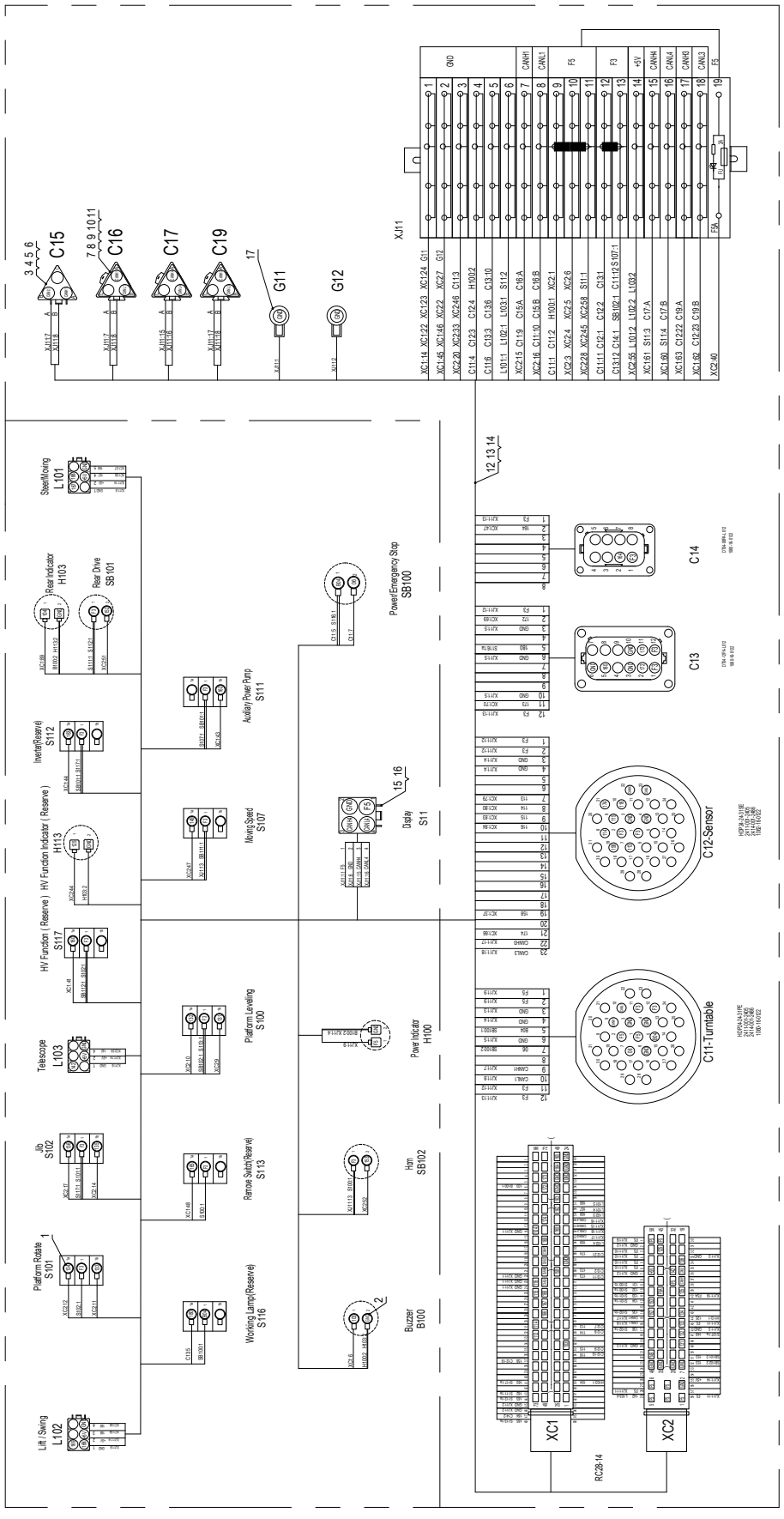
C15
C16
C17
C19
G11
G12
XJ11
GND
CANH1
CANL1
F5
F3
+5V
CANH4
CANL4
CANH3
CANL3
F5
Steer/Moving L101
Rear Indicator H103
Rear Drive SB101
Inverter(Reserve) S112
HV Function Indicator (Reserve) H113
HV Function (Reserve) S117
Telescope L103
Jib S102
Platform Rotate S101
Lift / Swing L102
Auxiliary Power Pump S111
Moving Speed S107
Platform Leveling S100
Remote Switch(Reserve) S113
Working Lamp(Reserve) S116
Power/Emergency Stop SB100
Display S11
Power Indicator H100
Horn SB102
Buzzer B100
C14
C13
C12-Sensor
C11-Turntable
XC1
XC2
RC28-14

No.	Part No.	Qty.	Description
	114001063001	1	Platform control box wiring diagram
1	203080000023	27	Terminal, blade-hole type
2	203080000036	16	Terminal
3	203080000404	1	Sheath
4	203080000032	1	Lock
5	203080000041	6	Terminal, female
6	203080000473	1	Cover, waterproof
7	203080000405	3	Sheath
8	203080000046	3	Lock
9	203080000033	6	Terminal, male
10	203080000068	4	Blind plug
11	203080000086	3	Sheath
12	203080000562	5	Cable, thin wall (red)
13	203080000563	7	Cable, thin wall (black)
14	203080000564	15	Cable, thin wall (white)
15	203080000044	1	Sheath
16	203080000020	1	Lock
17	203080000133	2	Terminal, blade-hole type

6.15 PLATFORM HARNESS(PN.105050063001)

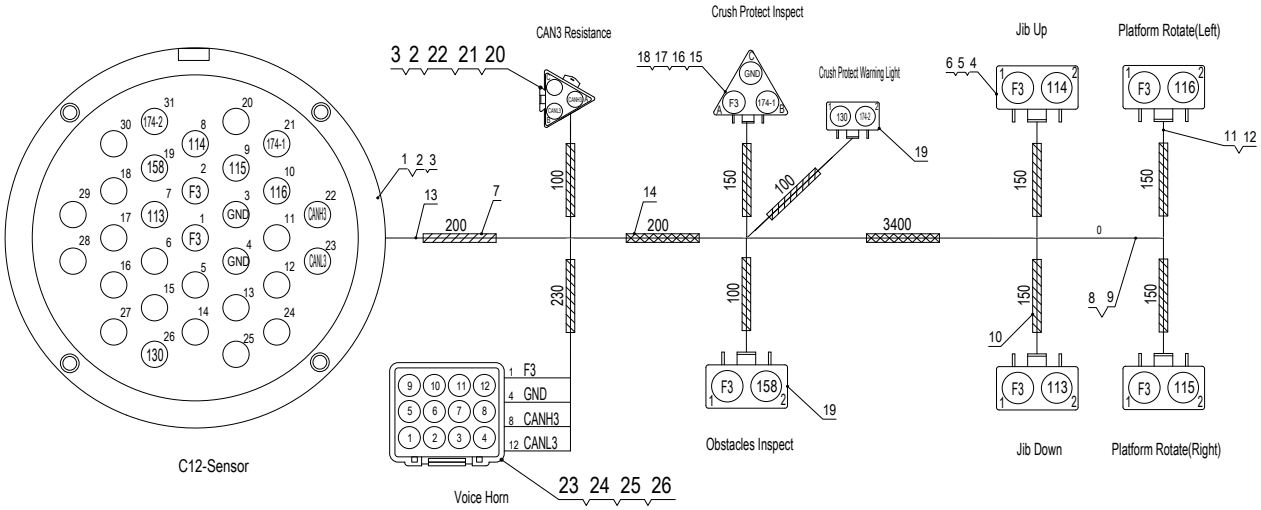

No.	Part No.	Qty.	Description
	105050063001	1	Wiring harness, platform
1	203080000515	1	Connector, 31P, male
2	203080000068	1	Blind plug
3	203080000033	1	Terminal, male
4	203080000410	1	Sheath
5	203080000016	1	Lock
6	203080000041	1	Terminal, female
7	203080000419	1	Nylon hose, closed-end
8	203080000564	1	Cable, thin wall (white)
9	203080000562	1	Cable, thin wall (red)
10	203080000463	1	Nylon hose, closed-end
11	203080000437	1	End attachments, 2-pin, female
12	203080000448	1	Rubber, 2-pin
13	203060000096	1	End clip, 180 deg.
14	203080000037	1	Corrugated pipe
15	203080000404	1	Sheath
16	203080000032	1	Lock
17	203080000508	1	End clip
18	203080000473	1	Cover, waterproof
19	203080000474	2	Cover, waterproof
20	203080000405	1	Sheath
21	203080000046	1	Lock
22	203080000086	1	Sheath
23	203080003584	1	Sheath
24	203080003585	1	Terminal
25	203080003586	4	Seal Ring
26	203080003587	12	Blind Plugging

6.16 PLATFORM HARNESS(PN.103006063009)

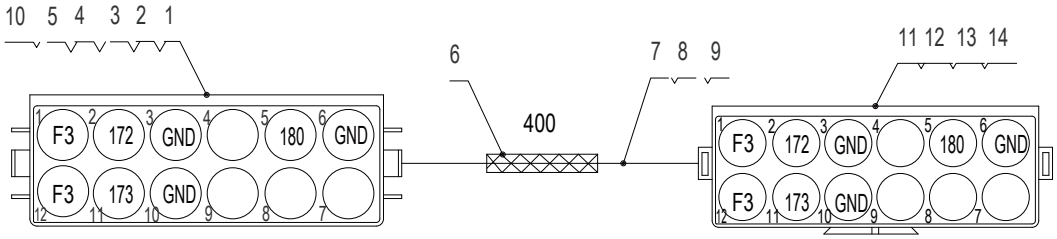

No.	Part No.	Qty.	Description
	103006063009	1	Wiring harness, platform
1	203080000155	1	Sheath
2	203080000159	1	Lock
3	203080000041	8	Terminal, female
4	203080000068	8	Blind plug
5	203080003001	1	End clip
6	203080000037	1m	Corrugated pipe
7	203080000562	2	Cable, thin wall (red)
8	203080000563	2	Cable, thin wall (black)
9	203080000564	1	Cable, thin wall (white)
10	203080003010	1	Nut, big-size
11	203080000403	1	Sheath
12	203080000157	1	Lock
13	203080000033	8	Terminal, male
14	203080000459	1	End clip

6.17 PLATFORM SENSORS HARNESS(PN.105031060013)

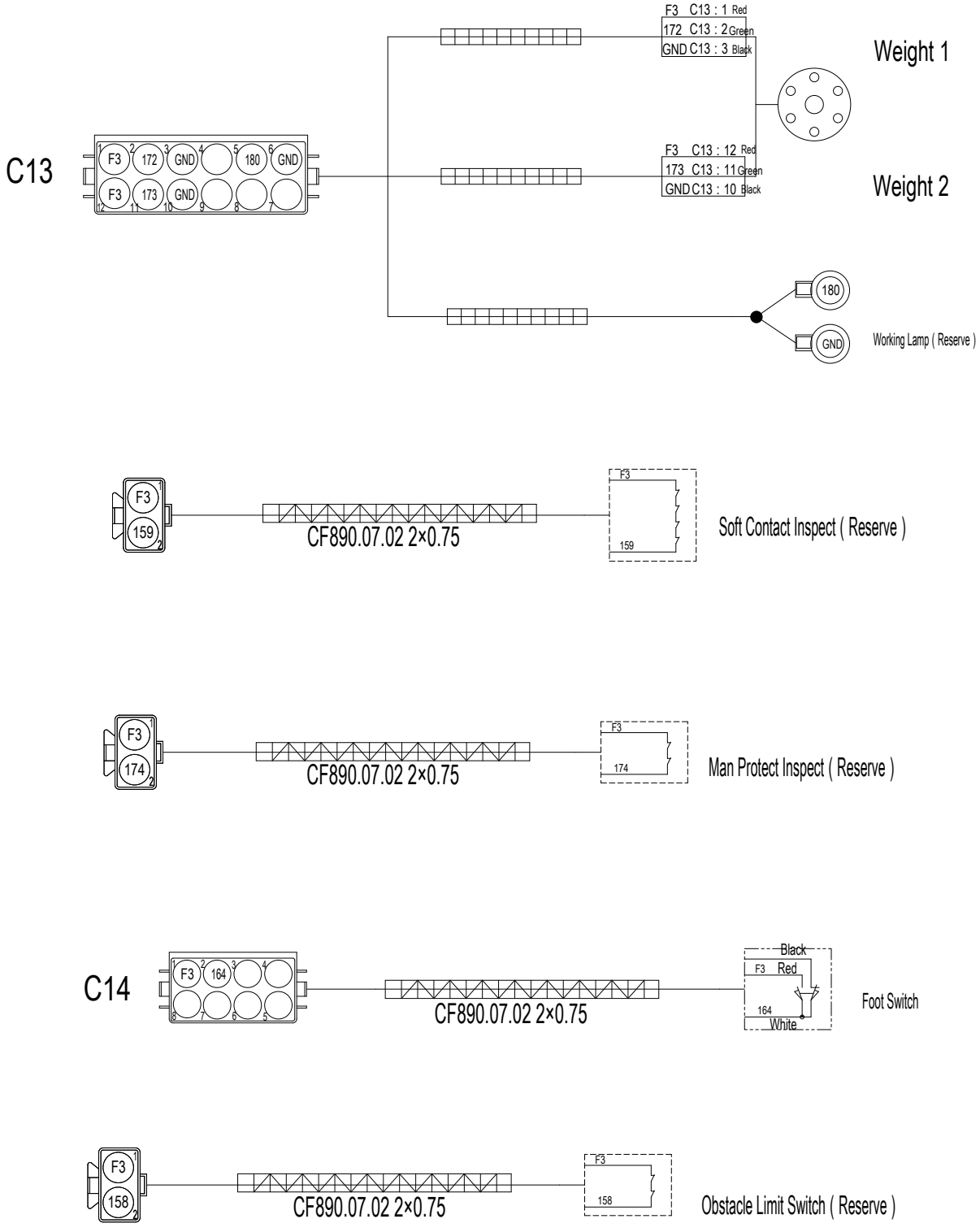

6.18 ELECTRICAL SCHEMATIC

Electrical schematic of turntable

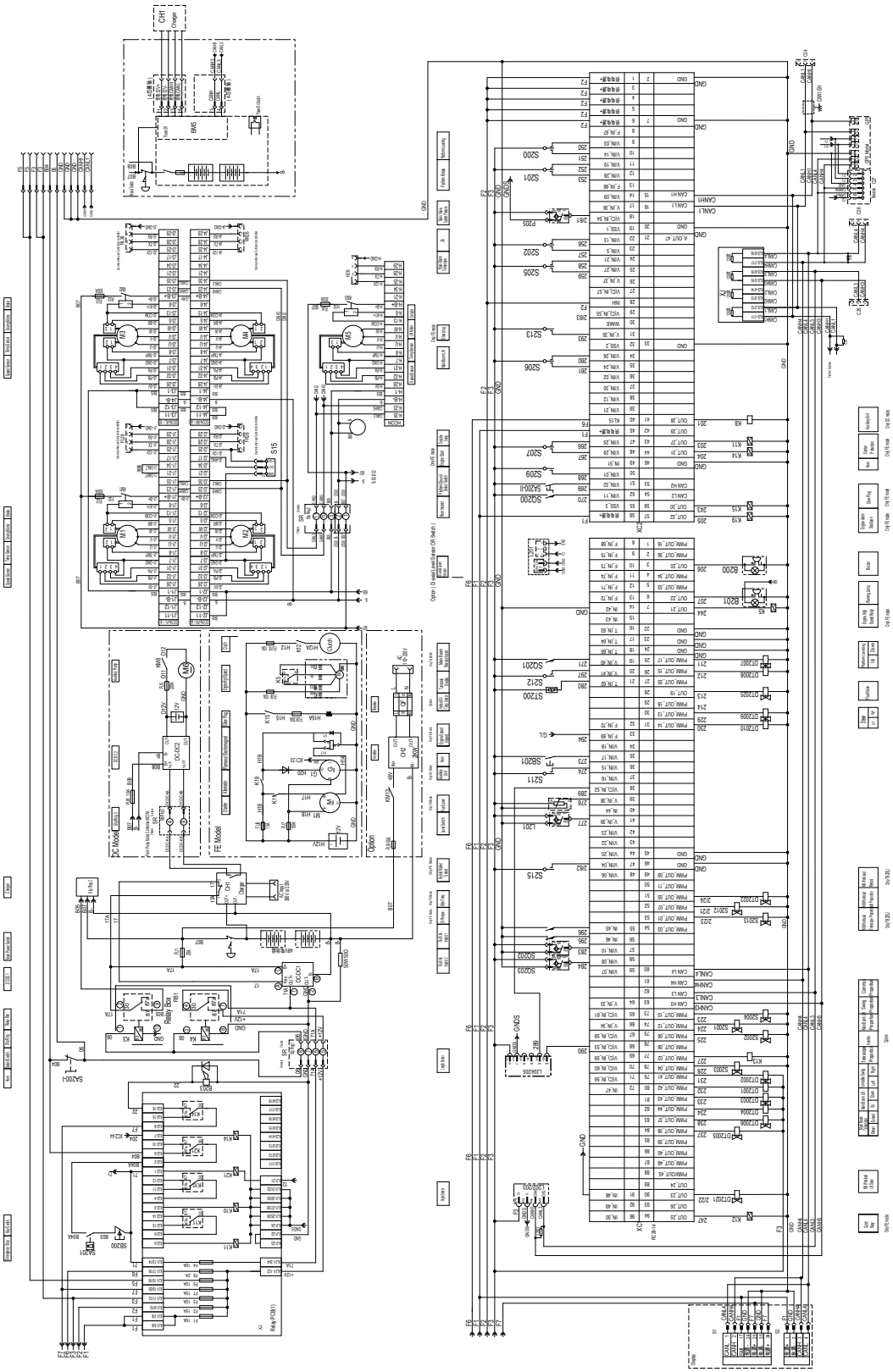

Electrical schematic of platform

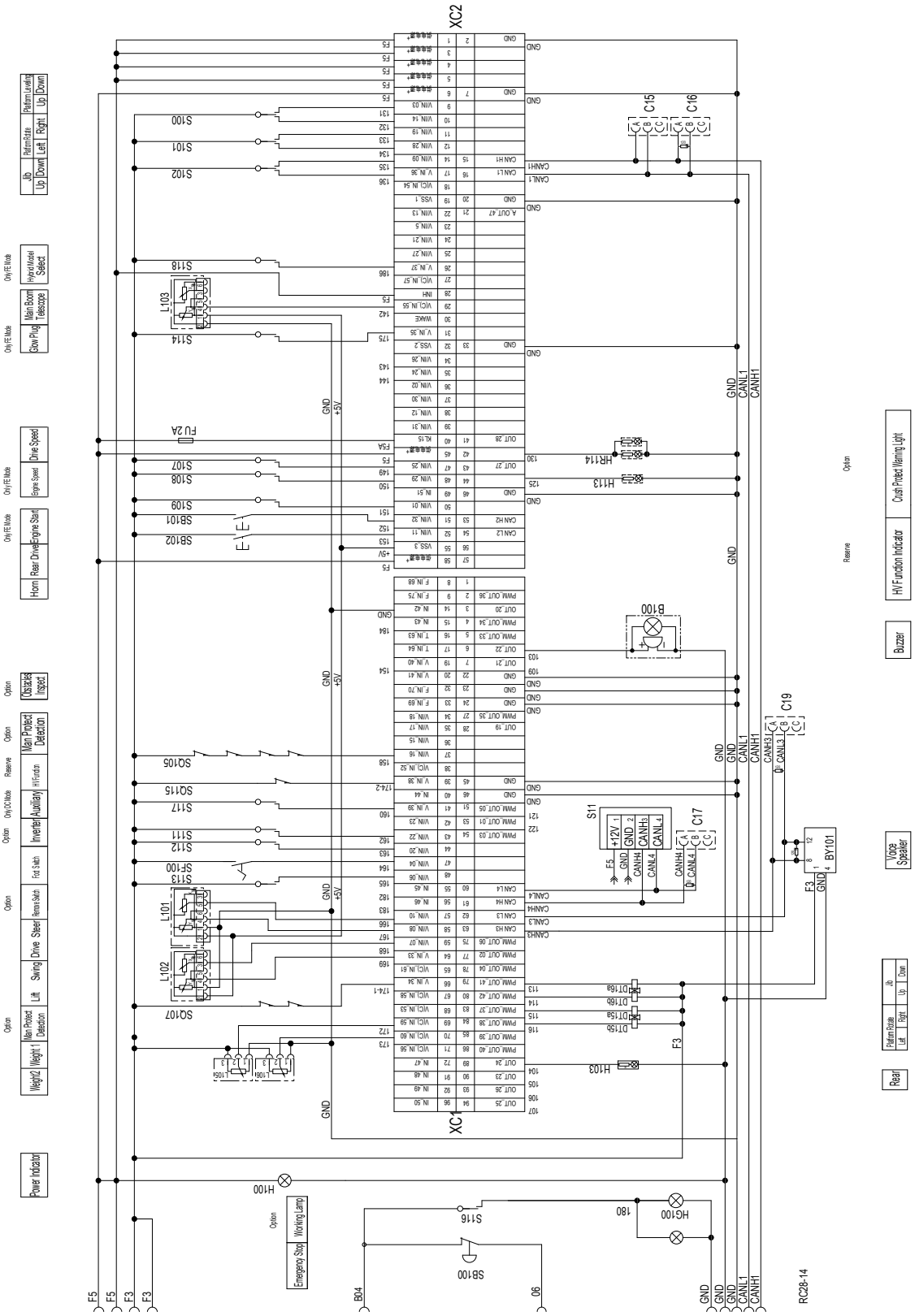

7 DECALS

7.1 DECALS(GB)

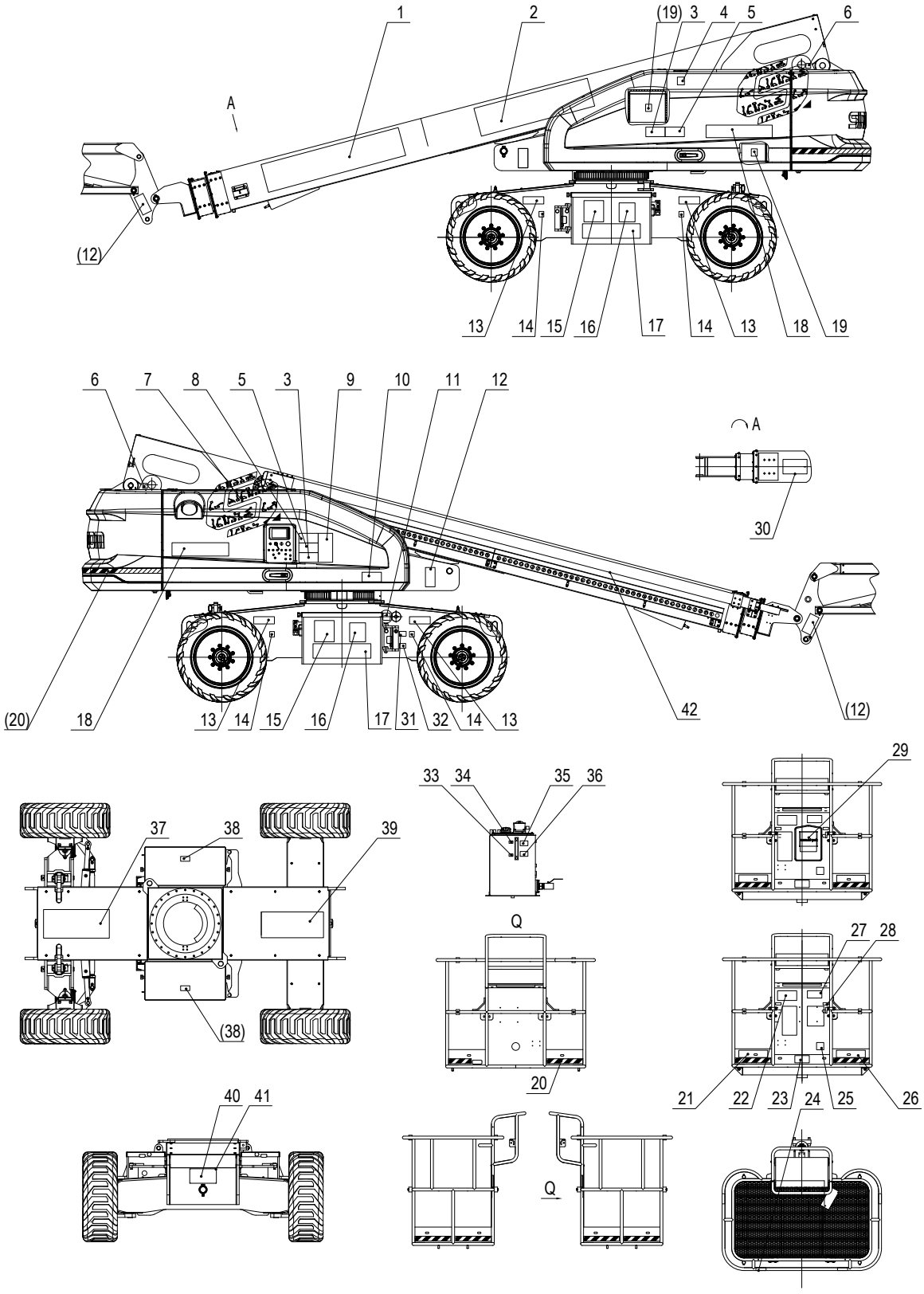
1
2
(19)
3
4
5
6
A
(12)
13
14
15
16
17
14
13
18
19
6
7
8
5
3
9
10
11
12
A
30
(20)
18
13
14
15
16
17
31
32
14
13
42
(12)
33
34
35
36
29
37
38
39
Q
27
28
(38)
20
21
22
23
24
25
26
40
41
Q

No.	Part No.	Qty.	Description
	114002103002	1	Decals(GB)-TB20EJ Plus
1	105057103001	1	LOGO-SINOBOOM
2	114002103001	1	Decal-TB20EJ Plus
3	104011100006	2	Decal-Bulkhead overhaul
4	101016100034	1	Decal-Noise 72dB
5	104011100007	2	Decal-Tipping hazard
6	104011100002	6	Decal-Lifting points
7	105045103002	2	LOGO-symbol
8	104011100013	1	Decal-Electrocution hazard
9	104011100020	2	Decal-General safety
10	104011100022	1	Decal-Turntable rotary lock
11	104011100016	1	Decal-Emergency stop switch
12	104011100011	4	Decal-Crush hazard
13	104011100001	4	Decal-Tipping hazard
14	105050103009	4	Decals-Wheel load 6740kg
15	114006103011	2	Decal-Battery, Lead acid
16	114006103012	2	Decal-QR code
17	103003100004	2	Decal-Contact information
18	114002103000	2	Decal-TB20EJ Plus
19	114004103012	2	Decal-Do not flush with water
20	216060000002	4	Attention line
21	103007103002	1	Decal-Tipping hazard
22	105021100003	1	Decal-Tipping hazard
23	104011100019	1	Decal-Crush hazard
24	104011100021	4	Decal-Crush hazard
25	104011100017	1	Decal-Footswitch
26	105046103004	1	Decal-Rated load 454kg
27	104011100009	1	Decal-Read manuals
28	101048100014	2	Decal-Lanyard anchorage points
29	114002103007	1	Decal-Range of motion(TB20EJ Plus)
30	104011100012	1	Decal-Fall hazard
31	101023100012	1	Decal-Charging voltage
32	101012100010	1	Decal-Electrocution hazard
33	104011100003	1	Decal-Hydraulic oil level
34	104011100010	1	Decal-Hydraulic oil level
35	104010100021	1	Decal-Hydraulic oil temperature range
36	104009100018	1	Decal-Hydraulic oil

No.	Part No.	Qty.	Description
37	105001100053	1	Decal-Direction
38	101012100001	2	Decal-No fire
39	105001100051	1	Decal-Direction
40	105001100057	1	Nameplate-GB
41	215050000001	4	Blind rivet 3×8-ZnD GB/T 12618.2

7.2 DECALS(GB)

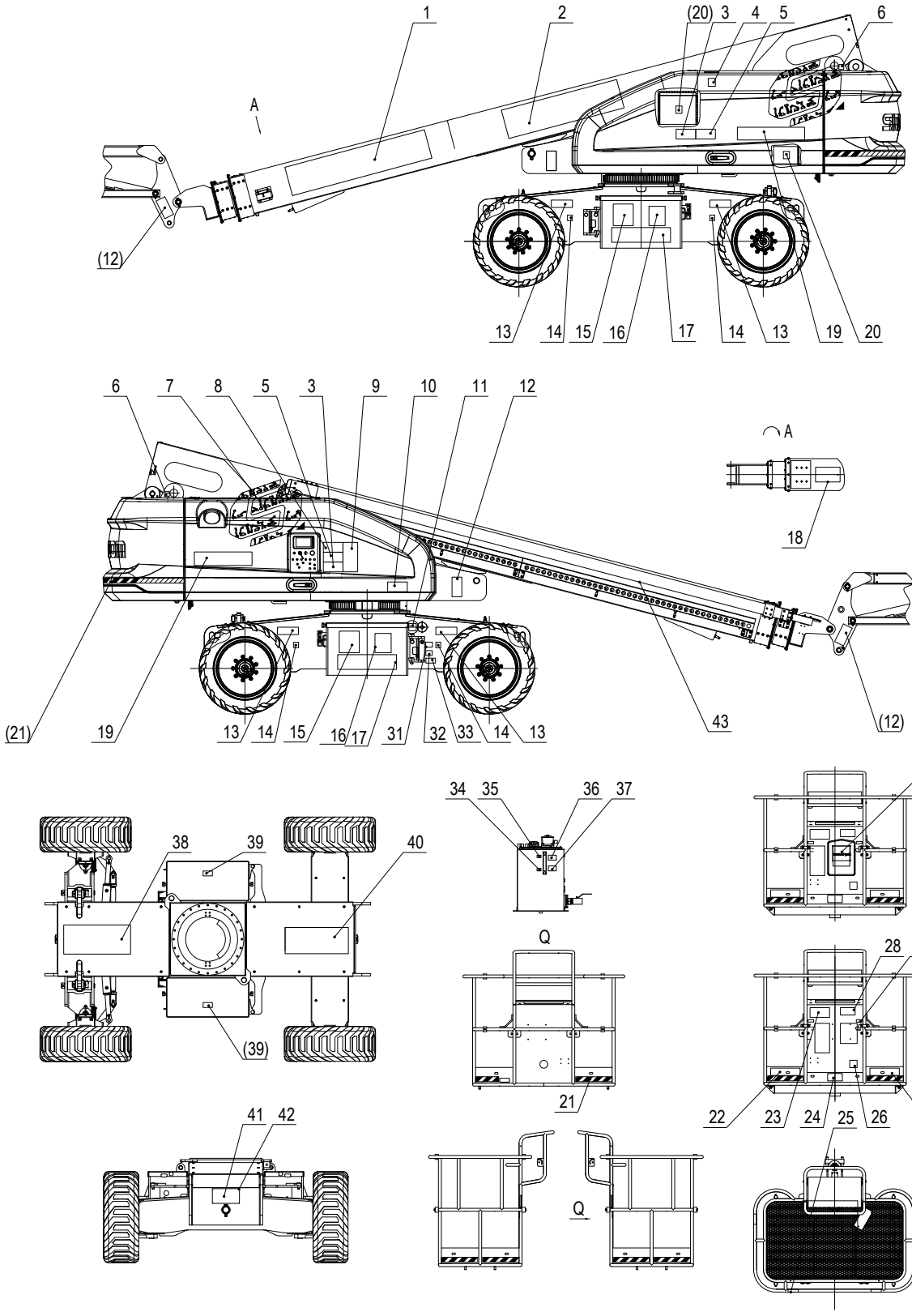
1
2
(20)
3
4
5
6
A
(12)
13
14
15
16
17
14
13
19
20
6
7
8
5
3
9
10
11
12
A
18
(21)
19
13
14
15
16
17
31
32
33
14
13
43
(12)
34
35
36
37
30
38
39
40
Q
28
29
(39)
21
22
23
24
25
26
27
41
42
Q

No.	Part No.	Qty.	Description
	114002103017	1	Decals(GB)-TB20EJ Plus-Li
1	105057103001	1	LOGO-SINOBOOM
2	114002103001	1	Decal-TB20EJ Plus
3	104011100006	2	Decal-Bulkhead overhaul
4	101016100034	1	Decal-Noise 72dB
5	104011100007	2	Decal-Tipping hazard
6	104011100002	6	Decal-Lifting points
7	105045103002	2	LOGO-symbol
8	104011100013	1	Decal-Electrocution hazard
9	104011100020	2	Decal-General safety
10	104011100022	1	Decal-Turntable rotary lock
11	104011100016	1	Decal-Emergency stop switch
12	104011100011	4	Decal-Crush hazard
13	104011100001	4	Decal-Tipping hazard
14	105050103009	4	Decals-Wheel load 6740kg
15	101048103033	2	Decals-Li
16	114006103012	2	Decal-QR code
17	103003100004	2	Decal-Contact information
18	104011100012	1	Decal-Fall hazard
19	114002103000	2	Decal-TB20EJ Plus
20	114004103012	2	Decal-Do not flush with water
21	216060000002	5	Attention line
22	103007103002	1	Decal-Tipping hazard
23	105021100003	1	Decal-Tipping hazard
24	104011100019	1	Decal-Crush hazard
25	104011100021	4	Decal-Crush hazard
26	104011100017	1	Decal-Footswitch
27	105046103004	1	Decal-Rated load 454kg
28	104011100009	1	Decal-Read manuals
29	101048100014	2	Decal-Lanyard anchorage points
30	114002103007	1	Decal-Range of motion
31	114002103014	1	Decal-Power switching
32	101012100010	1	Decal-Electrocution hazard
33	114002103016	1	Decal-charging plug
34	104011100003	1	Decal-Hydraulic oil level
35	104011100010	1	Decal-Hydraulic oil level
36	104010100021	1	Decal-Hydraulic oil temperature range

No.	Part No.	Qty.	Description
37	104009100018	1	Decal-Hydraulic oil
38	105001100053	1	Decal-Direction
39	101012100001	2	Decal-No fire
40	105001100051	1	Decal-Direction
41	105001100057	1	Nameplate-GB
42	215050000001	4	Blind rivet 3×8-ZnD GB/T 12618.2

7.3 DECALS(CE-METRIC)

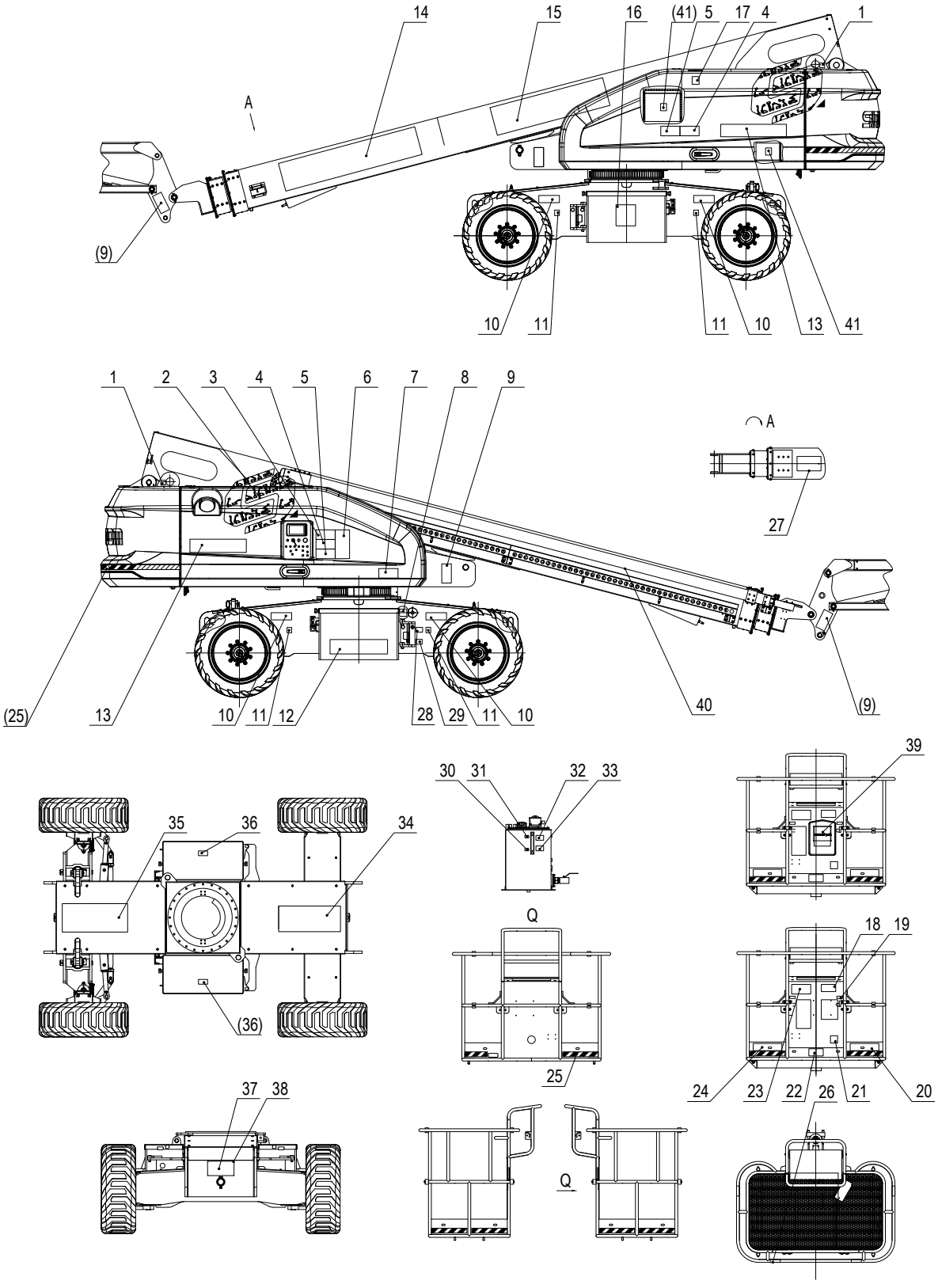

No.	Part No.	Qty.	Description
	114002103005	1	Decals(CE-Metric)-TB20EJ Plus
1	104011100002	6	Decal-Lifting points
2	105045103002	2	LOGO-symbol
3	104011100013	1	Decal-Electrocution hazard
4	104011100007	2	Decal-Tipping hazard
5	104011100006	2	Decal-Bulkhead overhaul
6	104011100020	2	Decal-General safety
7	104011100022	1	Decal-Turntable rotary lock
8	104011100016	1	Decal-Emergency stop switch
9	104011100011	4	Decal-Crush hazard
10	104011100001	4	Decal-Tipping hazard
11	105050103009	4	Decals-Wheel load 6740kg
12	105001100050	1	Decal-Contact information
13	114002103000	2	Decal-TB20EJ Plus
14	105057103001	1	LOGO-SINOBOOM
15	114002103001	1	Decal-TB20EJ Plus
16	103003100014	1	Decal-Recyclable
17	101016100034	1	Decal-Noise 72dB
18	104011100009	1	Decal-Read manuals
19	101016100030	2	Decal-Lanyard anchorage points
20	105046103004	1	Decal-Rated load 454kg
21	104011100017	1	Decal-Footswitch
22	104011100019	1	Decal-Crush hazard
23	105021100003	1	Decal-Tipping hazard
24	103007103002	1	Decal-Tipping hazard
25	216060000002	4	Attention line
26	104011100021	4	Decal-Crush hazard
27	104011100012	1	Decal-Fall hazard
28	101012100014	1	Decal-Charging voltage
29	101012100010	1	Decal-Electrocution hazard
30	104011100003	1	Decal-Hydraulic oil level
31	104011100010	1	Decal-Hydraulic oil level
32	104010100021	1	Decal-Hydraulic oil temperature range
33	104009100022	1	Decal-Hydraulic oil
34	105001100051	1	Decal-Direction
35	105001100053	1	Decal-Direction
36	101012100001	2	Decal-No fire

No.	Part No.	Qty.	Description
37	103011103012	1	Nameplate-UKCA&CE (TB)
38	215050000001	4	Blind rivet 3×8-ZnD GB/T 12618.2
39	114002103007	1	Decal-Range of motion(TB20EJ Plus)
41	114004103013	2	Decal-Do not flush with water

7.4 DECALS(CE-IMPERIAL)

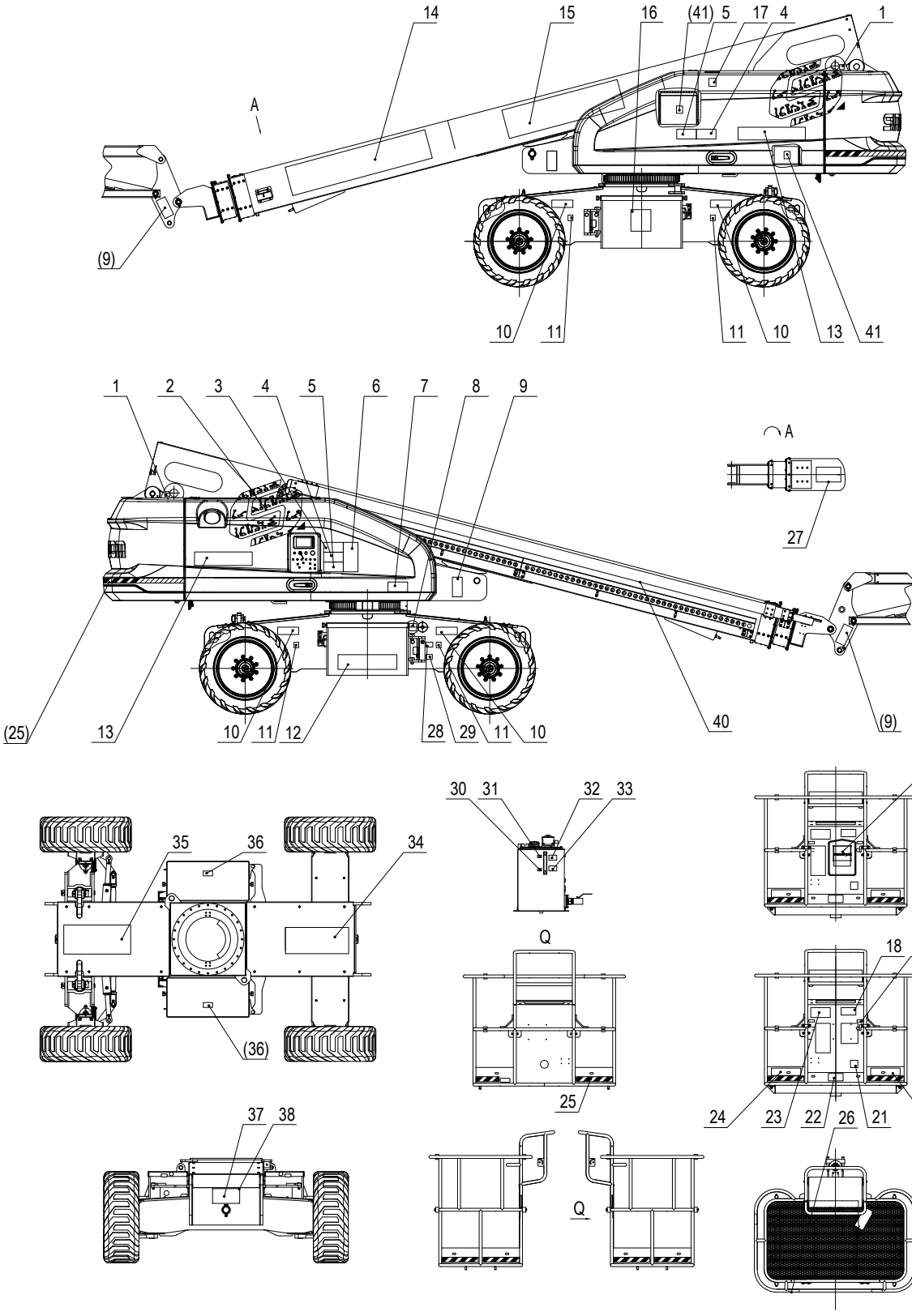

No.	Part No.	Qty.	Description
	114002103008	1	Decals(CE-Imperial)-TB20EJ Plus
1	104011100002	6	Decal-Lifting points
2	105045103002	2	LOGO-symbol
3	104011100013	1	Decal-Electrocution hazard
4	104011100007	2	Decal-Tipping hazard
5	104011100006	2	Decal-Bulkhead overhaul
6	104011100020	2	Decal-General safety
7	104011100022	1	Decal-Turntable rotary lock
8	104011100016	1	Decal-Emergency stop switch
9	104011100011	4	Decal-Crush hazard
10	104011100001	4	Decal-Tipping hazard
11	105050103009	4	Decals-Wheel load 6740kg
12	105001100050	1	Decal-Contact information
13	114002103009	2	Decal-TB660EJ Plus
14	105057103001	1	LOGO-SINOBOOM
15	114002103010	1	Decal-TB660EJ Plus
16	103003100014	1	Decal-Recyclable
17	101016100034	1	Decal-Noise 72dB
18	104011100009	1	Decal-Read manuals
19	101016100030	2	Decal-Lanyard anchorage points
20	105046103004	1	Decal-Rated load 454kg
21	104011100017	1	Decal-Footswitch
22	104011100019	1	Decal-Crush hazard
23	105021100003	1	Decal-Tipping hazard
24	103007103002	1	Decal-Tipping hazard
25	216060000002	4	Attention line
26	104011100021	4	Decal-Crush hazard
27	104011100012	1	Decal-Fall hazard
28	101012100014	1	Decal-Charging voltage
29	101012100010	1	Decal-Electrocution hazard
30	104011100003	1	Decal-Hydraulic oil level
31	104011100010	1	Decal-Hydraulic oil level
32	104010100021	1	Decal-Hydraulic oil temperature range
33	104009100022	1	Decal-Hydraulic oil
34	105001100051	1	Decal-Direction
35	105001100053	1	Decal-Direction
36	101012100001	2	Decal-No fire

No.	Part No.	Qty.	Description
37	103011103012	1	Nameplate-UKCA&CE (TB)
38	215050000001	4	Blind rivet 3×8-ZnD GB/T 12618.2
39	114002103007	1	Decal-Range of motion(TB20EJ Plus)
41	114004103013	2	Decal-Do not flush with water

 © Apr 2022

7.5 DECALS(CSA)

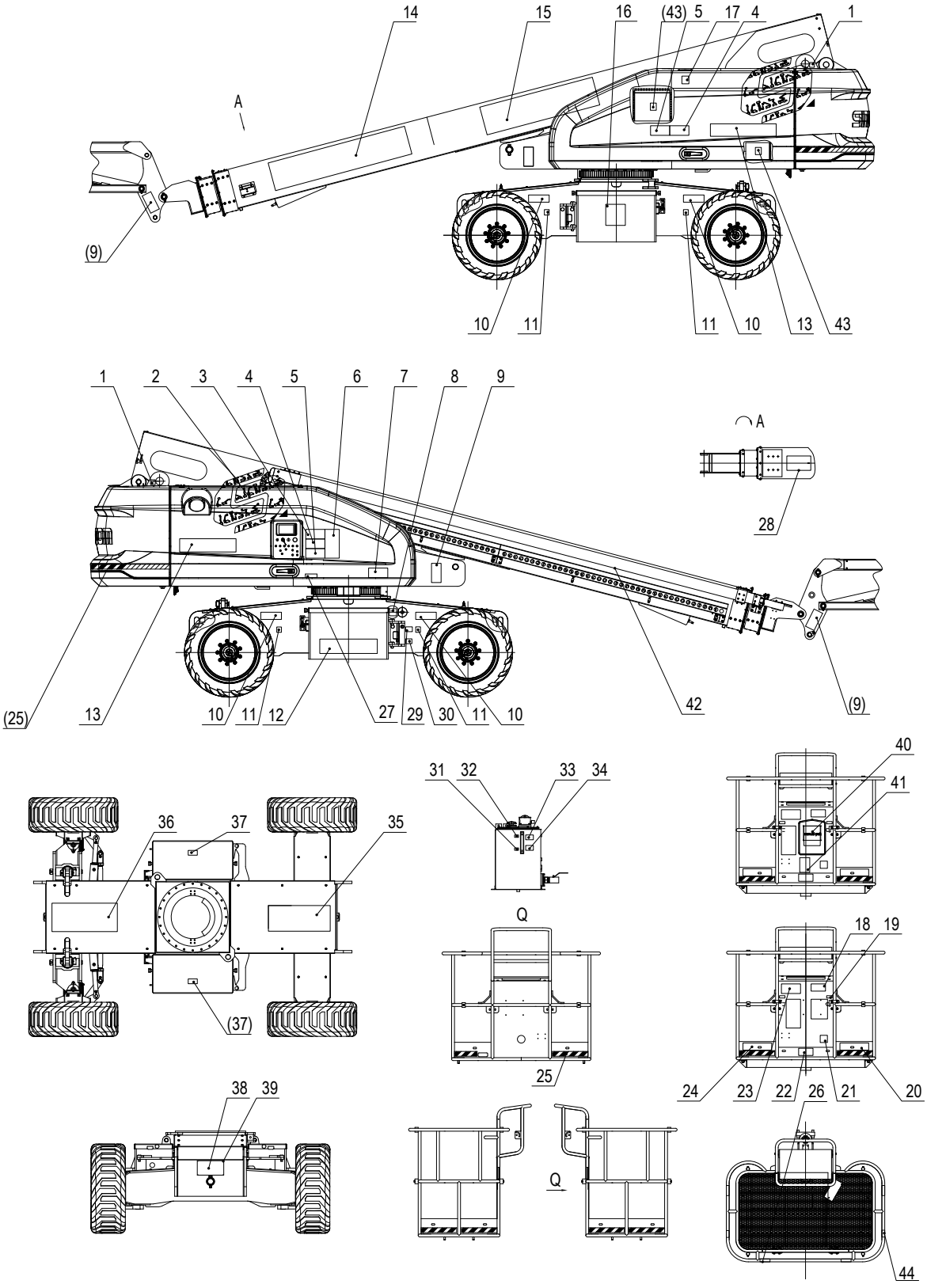

No.	Part No.	Qty.	Description
	114002103012	1	Decals(CSA)-TB20EJ Plus
1	104011100002	6	Decal-Lifting points
2	105045103002	2	LOGO-symbol
3	104011100013	1	Decal-Electrocution hazard
4	104011100007	2	Decal-Tipping hazard
5	104011100006	2	Decal-Bulkhead overhaul
6	104011100020	2	Decal-General safety
7	104011100022	1	Decal-Turntable rotary lock
8	104011100016	1	Decal-Emergency stop switch
9	104011100011	4	Decal-Crush hazard
10	104011100001	4	Decal-Tipping hazard
11	113002103008	4	Decals-Wheel load 6740kg
12	105001100050	1	Decal-Contact information
13	114002103009	2	Decal-TB660EJ Plus
14	105057103001	1	LOGO-SINOBOOM
15	114002103010	1	Decal-TB660EJ Plus
16	103003100014	1	Decal-Recyclable
17	101016100034	1	Decal-Noise 72dB
18	104011100009	1	Decal-Read manuals
19	101016100030	2	Decal-Lanyard anchorage points
20	105046103004	1	Decal-Rated load 454kg
21	104011100017	1	Decal-Footswitch
22	104011100019	1	Decal-Crush hazard
23	105021100003	1	Decal-Tipping hazard
24	103007103002	1	Decal-Tipping hazard
25	216060000002	4	Attention line
26	104011100021	4	Decal-Crush hazard
27	101040103015	1	Decal-Annual inspection
28	104011100012	1	Decal-Fall hazard
29	101012100014	1	Decal-Charging voltage
30	101012100010	1	Decal-Electrocution hazard
31	104011100003	1	Decal-Hydraulic oil level
32	104011100010	1	Decal-Hydraulic oil level
33	104010100021	1	Decal-Hydraulic oil temperature range
34	104009100022	1	Decal-Hydraulic oil
35	105001100051	1	Decal-Direction
36	105001100053	1	Decal-Direction

No.	Part No.	Qty.	Description
37	101012100001	2	Decal-No fire
38	103004103004	1	Nameplate-ANSI&CSA(TB)
39	215050000001	4	Blind rivet 3×8-ZnD GB/T 12618.2
40	114002103007	1	Decal-Range of motion(TB20EJ Plus)
41	105029103023	1	Decal-Operating instructions
43	114004103013	2	Decal-Do not flush with water
44	103010103014	3	Deca, non-insulatedd

7.6 DECALS(ANSI)

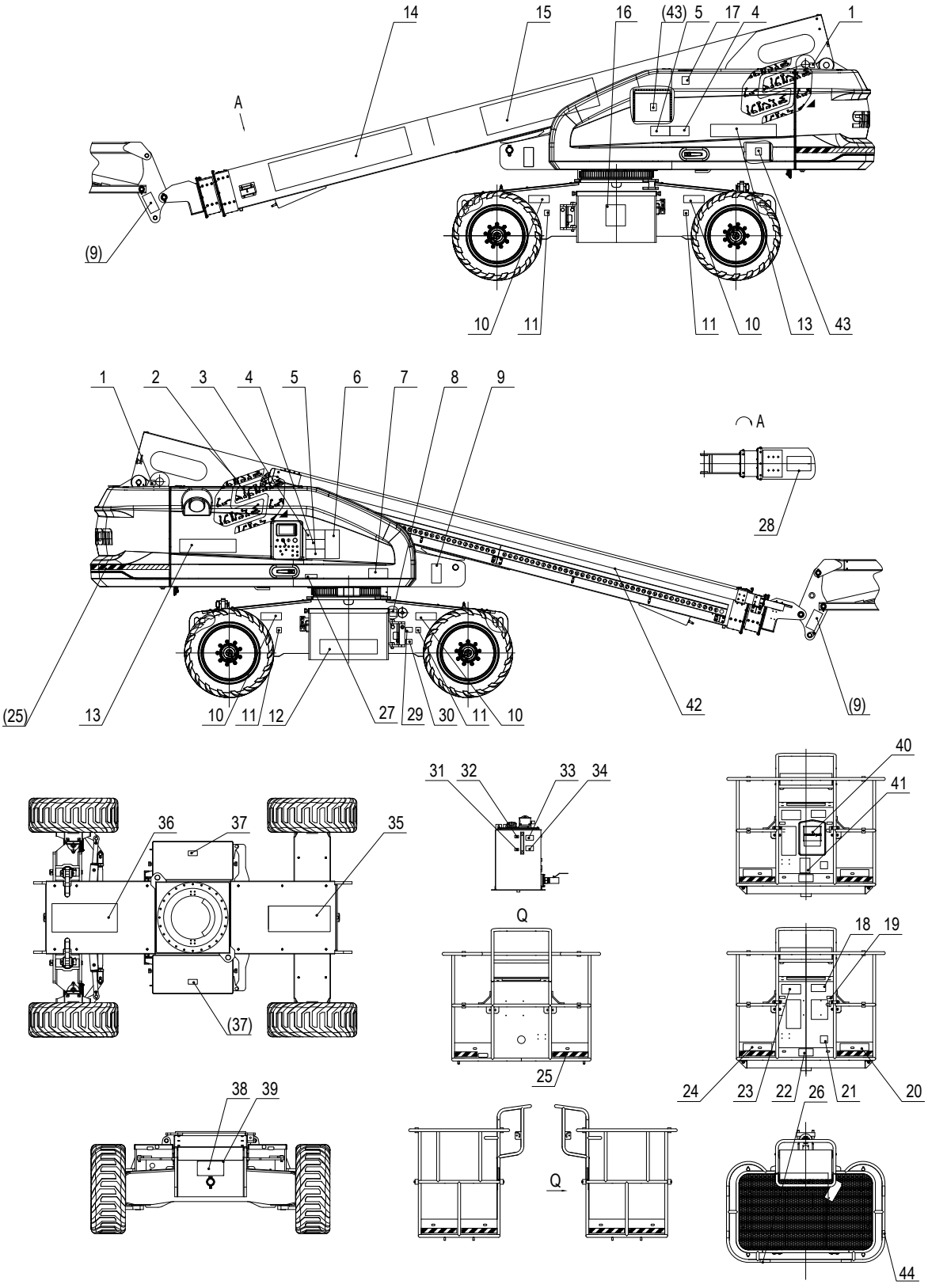

No.	Part No.	Qty.	Description
	114002103011	1	Decals(ANSI)-TB20EJ Plus
1	104011100002	6	Decal-Lifting points
2	105045103002	2	LOGO-symbol
3	104011100013	1	Decal-Electrocution hazard
4	104011100007	2	Decal-Tipping hazard
5	104011100006	2	Decal-Bulkhead overhaul
6	104011100020	2	Decal-General safety
7	104011100022	1	Decal-Turntable rotary lock
8	104011100016	1	Decal-Emergency stop switch
9	104011100011	4	Decal-Crush hazard
10	104011100001	4	Decal-Tipping hazard
11	113002103008	4	Decals-Wheel load 6740kg
12	105001100050	1	Decal-Contact information
13	114002103009	2	Decal-TB660EJ Plus
14	105057103001	1	LOGO-SINOBOOM
15	114002103010	1	Decal-TB660EJ Plus
16	103003100014	1	Decal-Recyclable
17	101016100034	1	Decal-Noise 72dB
18	104011100009	1	Decal-Read manuals
19	101016100030	2	Decal-Lanyard anchorage points
20	105046103004	1	Decal-Rated load 454kg
21	104011100017	1	Decal-Footswitch
22	104011100019	1	Decal-Crush hazard
23	105021100003	1	Decal-Tipping hazard
24	103007103002	1	Decal-Tipping hazard
25	216060000002	4	Attention line
26	104011100021	4	Decal-Crush hazard
27	101040103015	1	Decal-Annual inspection
28	104011100012	1	Decal-Fall hazard
29	101012100014	1	Decal-Charging voltage
30	101012100010	1	Decal-Electrocution hazard
31	104011100003	1	Decal-Hydraulic oil level
32	104011100010	1	Decal-Hydraulic oil level
33	104010100021	1	Decal-Hydraulic oil temperature range
34	104009100022	1	Decal-Hydraulic oil
35	105001100051	1	Decal-Direction
36	105001100053	1	Decal-Direction

No.	Part No.	Qty.	Description
37	101012100001	2	Decal-No fire
38	103004103004	1	Nameplate-ANSI&CSA(TB)
39	215050000001	4	Blind rivet 3×8-ZnD GB/T 12618.2
40	114002103007	1	Decal-Range of motion(TB20EJ Plus)
41	105029103023	1	Decal-Operating instructions
43	114004103013	2	Decal-Do not flush with water
44	103010103014	3	Deca, non-insulatedd

This Page Intentionally Left Blank

8 SPECIAL OPTIONS

8.1 GPS INSTALLATION

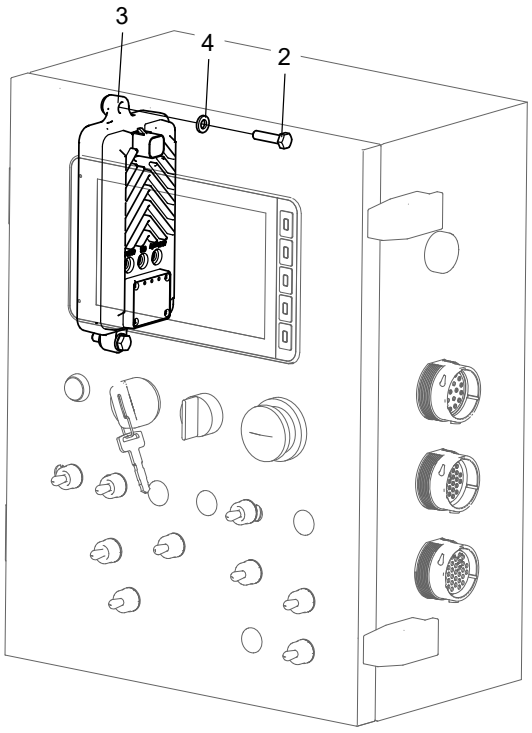

No.	Part No.	Qty.	Description
1	203150003022	1	GPS/LTE antenna(Not Shown)
2	215010003054	2	Nylon Bolt M6×25-4.8-PA66
3	203150003021	1	GPS module (4G)
4	215040003034	4	Nylon Washer 6-PA66

8.2 OVERHEAD PROTECTION INSTALLATION

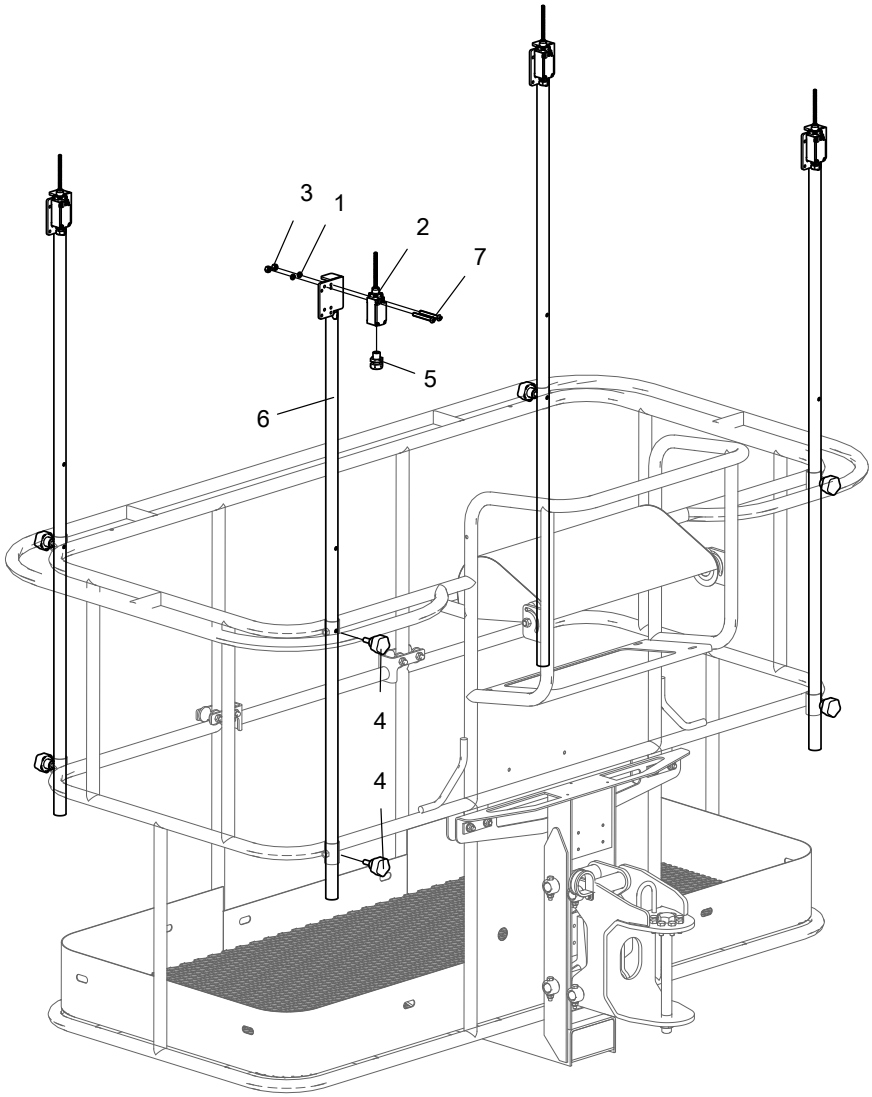

No.	Part No.	Qty.	Description
1	215040000003	8	Washer 5-A2-70 GB/T 93
2	203060000056	4	Travel switch
3	215030000003	8	Nut M5-A2-70 GB/T 6170
4	209030000006	8	Bolt, star-headed
5	203990000005	4	Connector, waterproof, nylon
6	105017060001	4	Steel pipe, overhead
7	215020000215	8	Screw M5×40-A2-70 GB/T 818

8.3 MANUAL STORAGE CONTAINER INSTALLATION

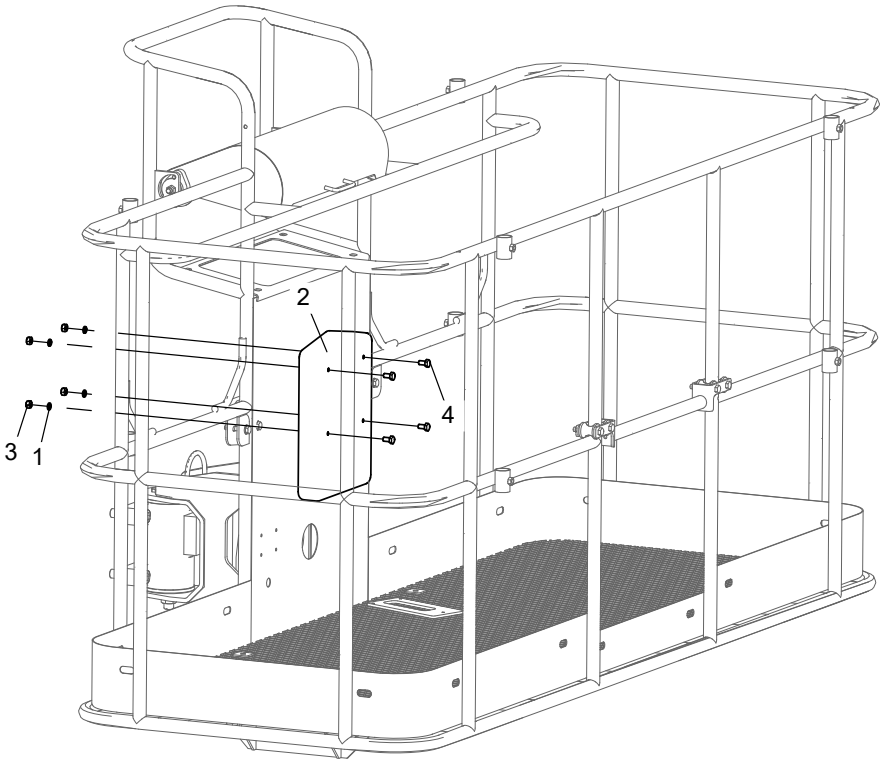

No.	Part No.	Qty.	Description
1	215040000004	4	Washer 6-A2-70 GB/T 93
2	216070000001	1	Manual storage container
3	215030000004	4	Nut M6-A2-70 GB/T 6170
4	215010000049	4	Bolt M6×12-A2-70 GB/T 5783

8.4 WORK LIGHT INSTALLATION

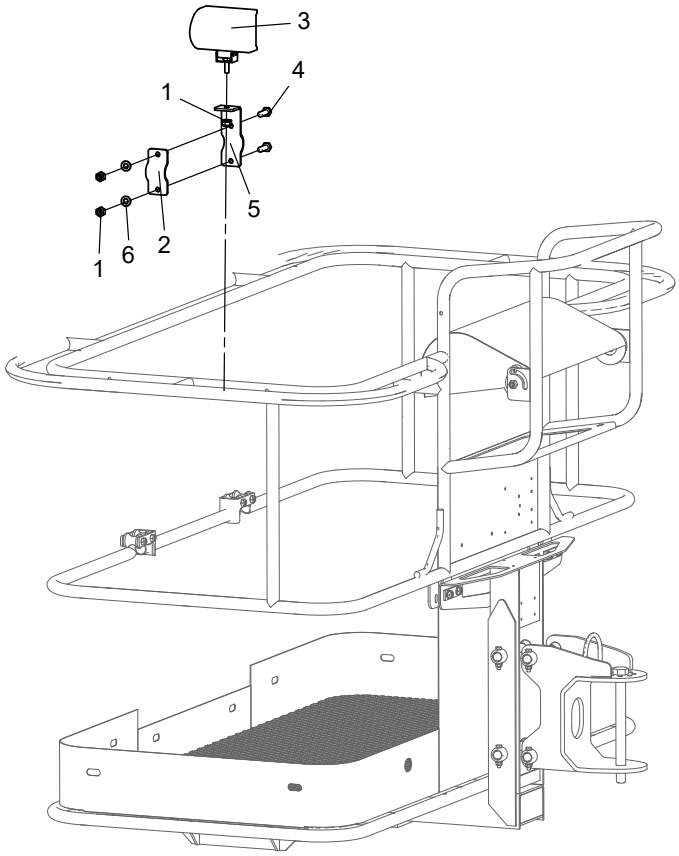

No.	Part No.	Qty.	Description
1	215030000026	3	Nut M8-8-ZnD GB/T889.1
2	105017060067	1	Plate
3	203050000020	1	Work Light, LED
4	215010000058	2	Bolt M8×25-8.8-ZnD GB/T 5783
5	105017060066	1	Plate
6	215040000034	3	Washer 8-200HV-ZnD GB/T 97.1
7	203080000104	2	Cable, copper-cored(Not shown)
8	203080000033	2	Terminal, male(Not shown)
9	203080000021	1	Lock(Not shown)
10	203080000011	1	Sheath(Not shown)

8.5 CIVIL AC POWER INSTALLATION

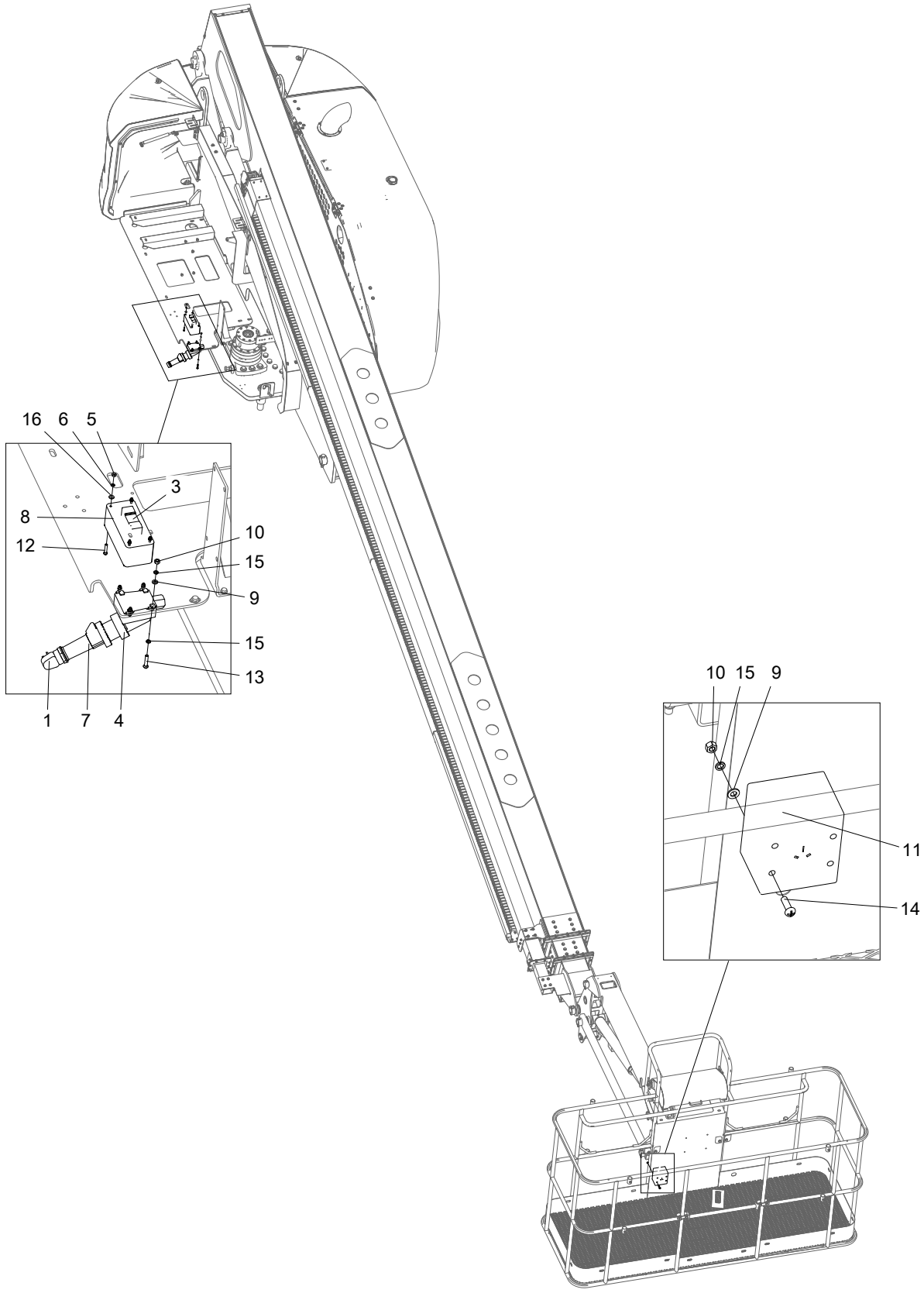

No.	Part No.	Qty.	Description
1	101015060036		Electrical plug options
1-1	203080000537	1	Electrical plug
1-2	203080000534	1	Electrical plug
1-3	203080000538	1	Electrical plug
1-4	203080000530	1	Electrical plug
1-5	203080000532	1	Electrical plug
1-6	203080000539	1	Electrical plug
2	203080000552	33	Cable, chain(Not Shown)
3	203160000002	1	RCBO
4	203080003079	1	Socket, 3P16A IP67, male terminal, externally installed
5	215030000002	4	Nut M4-8-A2-70 GB/T 6170
6	215040000002	4	Washer 4-A2-70 GB/T 93
7	203080003078	1	Plug, 3P16A IP67, female terminal
8	203090000002	1	Waterproof Cover, RCBO
9	215040000032	8	Washer 5-A2 GB/T 97.1
10	215030000003	8	Nut M5-A2-70 GB/T 6170
11	203080000249	1	Socket, waterproof
12	215020000107	4	Screw M4×20-A2-70 GB/T 818
13	215020000113	4	Screw M5×25-A2-70 GB/T 818
14	215020000111	4	Screw M5×16-A2-70 GB/T 818
15	215040000003	12	Washer 5-A2-70 GB/T 93
16	215040000031	4	Washer 4-A2 GB/T 97.1

8.6 ANTI-PINCH DEVICE INSTALLATION

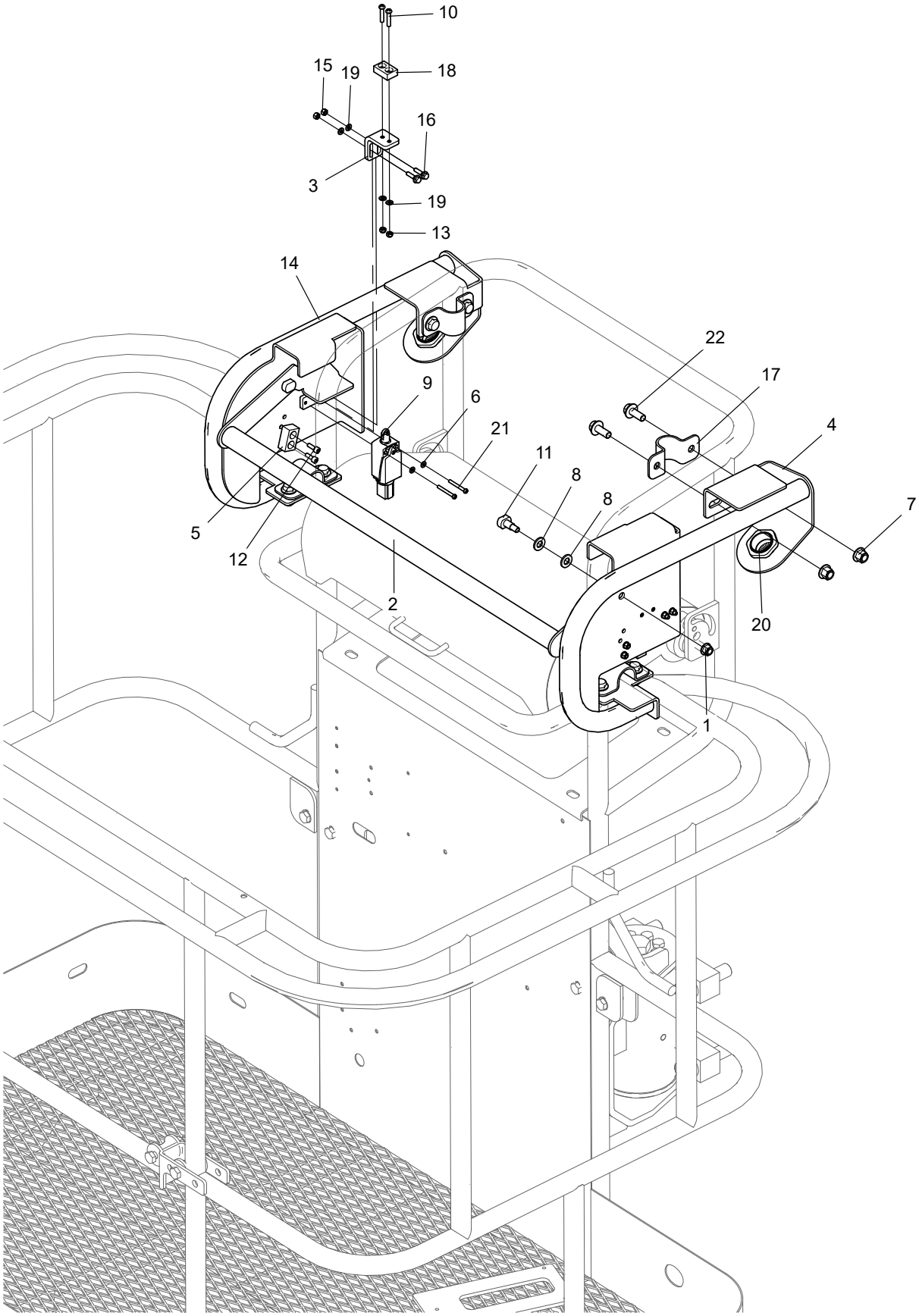

No.	Part No.	Qty.	Description
1	215030000108	2	Nut M8-8-ZnD GB/T 6183
2	105070043011	1	Bracket
3	105070043028	2	Bending plate
4	105070043030	1	bracket
5	103010013495	2	Pad
6	215040000031	4	Washer 4-A2 GB/T 97.1
7	215030000109	8	Nut M10-8-ZnD GB/T 6183
8	215040000035	4	Washer 10-200HV-ZnD GB/T 97.1
9	203060003031	2	Travel switch
10	215020000113	4	Screw M5×25-A2-70 GB/T 818
11	105070043031	2	Bolt
12	215020000007	4	Screw M5×16-A2-70 GB/T 70.1
13	215030000091	4	Nut M5-A2-70 GB/T 6184
14	105070043032	1	Bracket
15	215030000003	8	Nut M5-A2-70 GB/T 6170
16	215010000256	4	Bolt M5×20-8.8-ZnD GB/T 5789
17	105029043013	4	Plate
18	209990003011	2	magnet
19	215040000032	12	Washer 5-A2 GB/T 97.1
20	203050003058	2	Beacon Light
21	215020000212	4	Screw M4×35-A2-70 GB/T 818
22	215010000238	8	Bolt M10×25-8.8-ZnD GB/T 5789

8.7 ANTI-PINCH HARNESS(PN.105078063081)

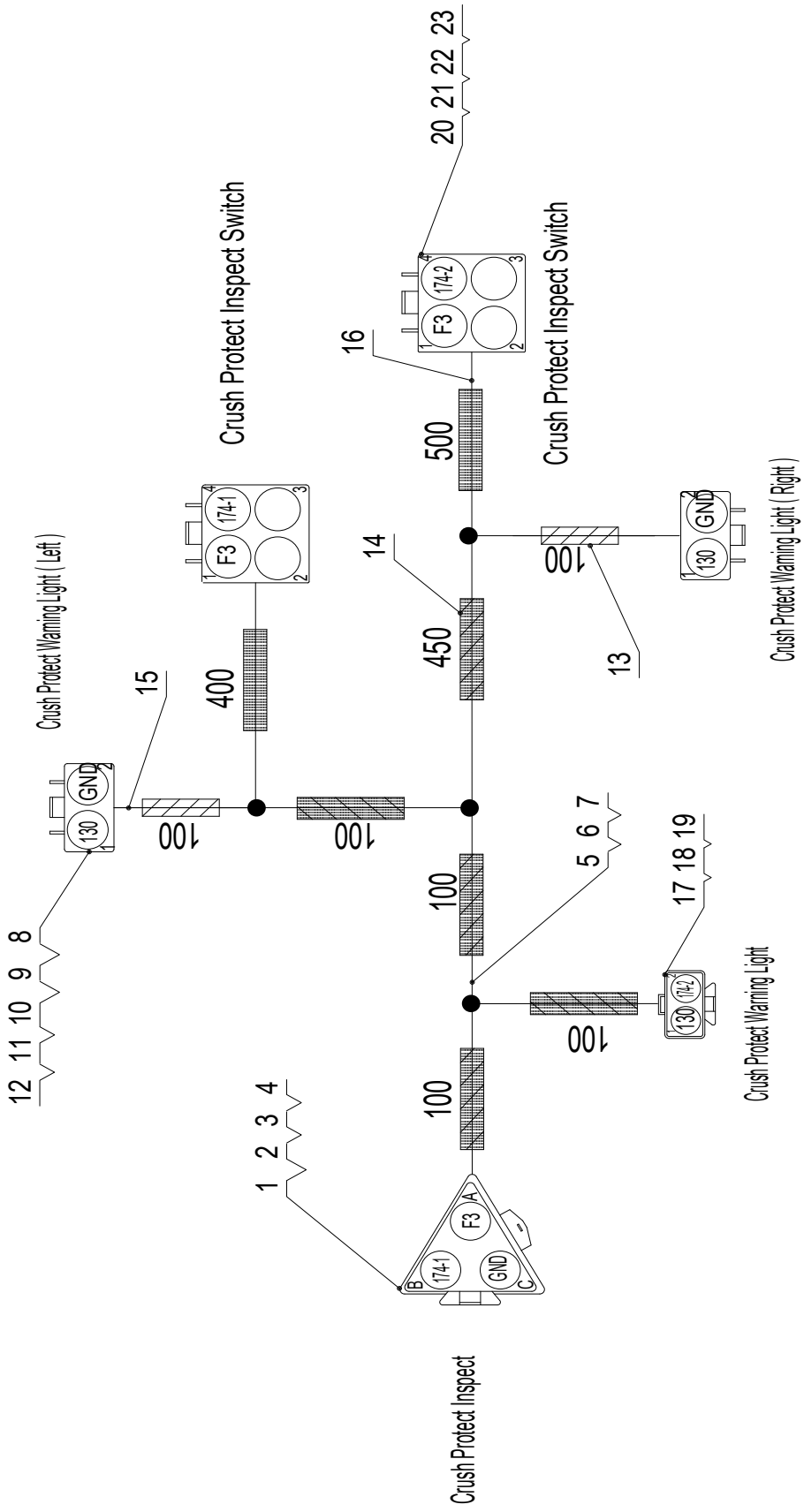

No.	Part No.	Qty.	Description
	105078063081	1	Harness, anti-pinch device
1	203080000405	1	Sheath
2	203080000046	1	Lock
3	203080000033	5	Terminal, male
4	203080000466	1	End clip
5	203080003313	2	Cable, thin wall
6	203080003326	1	Cable, thin wall
7	203080000564	5	Cable, thin wall (white)
8	203080000410	2	Sheath
9	203080000016	2	Lock
10	203080000041	8	Terminal, female
11	203080000437	2	End attachments, 2-pin, female
12	203080000448	2	Rubber, 2-pin
13	203080000417	1	Nylon hose, closed-end
14	203080000424	1	Nylon hose, closed-end
15	203080000563	1	Cable, thin wall (black)
16	203080000562	1	Cable, thin wall (red)
17	203080000408	1	Sheath
18	203080000021	1	Lock
19	203080000462	1	End attachments, 2-pin, male
20	203080000044	2	Sheath
21	203080000020	2	Lock
22	203080000445	2	End attachments, 4-pin, female
23	203080000446	2	Rubber, 4-pin

8.8 ELECTRICAL DIAGRAM OF ANTI-PINCH DEVICE

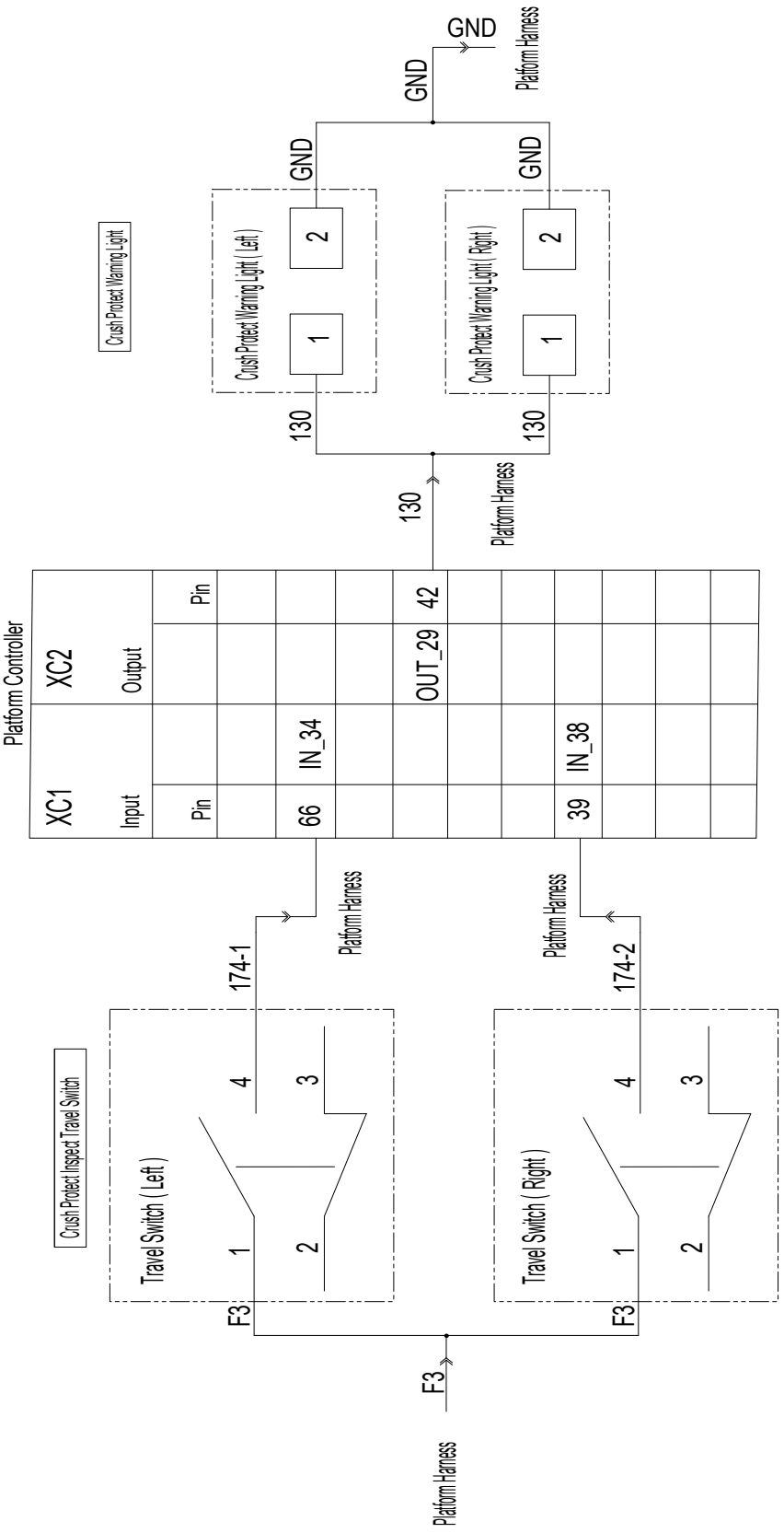

Always for Better Access Solutions

Hunan Sinoboom Intelligent Equipment Co., Ltd.

No.128, East Jinzhou Avenue, Ningxiang High-tech Industrial Park, Changsha, Hunan, China

0086-0731-87116222 (Sales) & 0086-0731-87116333 (Service)
sales@sinoboom.com
www.sinoboom.com

North American Subsidiary

Sinoboom North American LLC

310 Mason Creek Drive
unit #100
Katy, TX 77450, US
Tel: (281) 729–5425
E-mail: info@sinoboom.us

Europe Subsidiary

Sinoboom B.V.

Nikkelstraat 26, NL-2984 AM Ridderkerk,
The Netherlands
Tel: +31 180 225 666
E-mail: info@sinoboom.eu

Korea Subsidiary

Sinoboom Korea Co., Ltd.

95, Docheong-ro, Yeongtong-gu, Suwon-si, Gyeonggi-do, Republic of Korea
Tel: 010–8310–8026
E-mail: ka1@sinoboom.com

Australia Subsidiary

Sinoboom Intelligent Equipment Pty Ltd.

50/358 Clarendon St, South Melbourne
VIC 3205, Australia
E-mail: au@sinoboom.com

Singapore Subsidiary

Star Access Solutions Pte. Ltd.

112 Robinson Road #03-01 Robinson 112
Singapore 068902

Poland Subsidiary

Sinoboom Poland sp. z o.o.

Ul. Bolesława Krzywoustego 74A
61-144 Poznań, Poland